97H1-11-1-B ✔ ACTIVE

TE Internal #: 97H1-11-1-B

TE Internal Description: 97H1-11-1-B

View on TE.com >

Product Compliance

For compliance documentation, visit the product page on TE.com>

EU RoHS Directive 2011/65/EU	Not Compliant
EU ELV Directive 2000/53/EC	Not Compliant
China RoHS 2 Directive MIIT Order No 32, 2016	有害物质含量超出标准 Restricted Substance(s) Above Threshold
EU REACH Regulation (EC) No. 1907/2006	Current ECHA Candidate List: JUNE 2025 (250) Candidate List Declared Against: JUNE 2025 (250) SVHC > Threshold: Pb (.4% in Component) Cd (100% in Component) Article Safe Usage Statements: Use personal protective equipment as required. Do not eat, drink or smoke when using this product. Wash thoroughly after handling. Recycle if possible and dispose of the article by following all applicable governmental regulations relevant to your geographic location.
Halogen Content	Low Halogen - Br, Cl, F < 900 ppm per homogenous material. Also BFR/CFR/PVC Free
Solder Process Capability	Not applicable for solder process capability

Product Compliance Disclaimer

This information is provided based on reasonable inquiry of our suppliers and represents our current actual knowledge based on the information they provided. This information is subject to change. The part numbers that TE has identified as EU RoHS compliant have a maximum concentration of 0.1% by weight in homogenous materials for lead, hexavalent chromium, mercury, PBB, PBDE, DBP, BBP, DEHP, DIBP, and 0.01% for cadmium, or qualify for an exemption to these limits as defined in the Annexes of Directive 2011/65/EU (RoHS2). Finished electrical and electronic equipment products will be CE marked as required by Directive 2011/65/EU. Components may not be CE marked. Additionally, the part numbers that TE has identified as EU ELV compliant have a maximum concentration of 0.1% by weight in homogenous materials for lead, hexavalent chromium, and mercury, and 0.01% for cadmium, or qualify for an exemption to these limits as defined in the Annexes of Directive 2000/53/EC (ELV). Regarding the REACH Regulation, the information TE provides on SVHC in articles for this part number is based on the latest European Chemicals Agency (ECHA) 'Guidance on requirements for substances in articles' posted at this URL: https://echa.europa.eu/guidance-documents/guidance-on-reach

Customers Also Bought

TE Part #ZPF000000000000486
014-1015-20

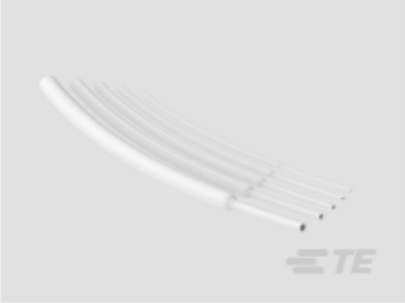

TE Part #NB19564001
RNF-100-3/16-WH-SP

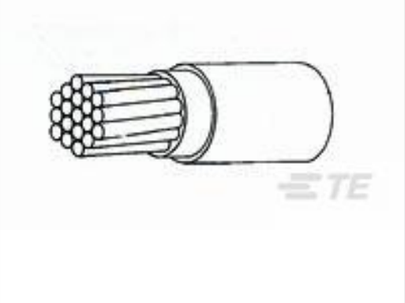

TE Part #282029-031
44A0111-20-9

TE Part #36467
SOLIS R 22-16 COMM 22-18 MIL 4

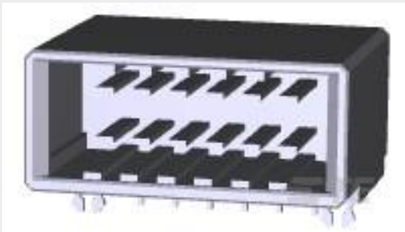

TE Part #178306-3
DYNAMIC D3100 HDR ASSY 12P H PdNi PL

TE Part #280755-2
FF 375 REC 6-10MM2 TPBR

TE Part #861252-1
RECEPTACLE

TE Part #1981562-1
1.0 SERIES CAVITY PLUG

TE Part #5-2176345-5
CRGCQ 1210 330K 1%

TE Part #5786860-7
68 50SR CABLE RCPT S/A

Documents

Product Drawings

97H1-11-1-B

English

CAD Files

3D PDF

3D

Customer View Model

ENG_CVM_CVM_97H1-11-1-B_1.2d_dxf.zip

English

Customer View Model

ENG_CVM_CVM_97H1-11-1-B_1.3d_igs.zip

English

Customer View Model

ENG_CVM_CVM_97H1-11-1-B_1.3d_stp.zip

English

By downloading the CAD file I accept and agree to the Terms and Conditions of use.

Datasheets & Catalog Pages

97H1-11-1-B

MATERIAL AND FINISH DETAILS

English