Series 95

12.1 mm 15.2 mm 18.4 mm IP40 50 mA 48 VDC

PUSHBUTTON

Choose one component from each of the coloured sections to assemble a complete switch.
For other options or further information please contact your local sales office.

Product Profile

The Series 95 is a high quality switch range containing illuminated and non-illuminated pushbuttons. The switching elements are equiped with goldplated, self cleaning and momentary contact elements.

Technical data see page 135

- IP40 Protection
- Switch Rating, 50 mA, 48 VDC
- Suitable for mounting on PCB's with thickness of 1.5 to 2.5 mm
- Switch held during the soldering process by the spring clip contacts
- Illumination using SMD LED's with PLCC housing (height 2.1 mm) and a radiation angle of approx. 120°
- Lenses available matt translucent or clear transparent in flat, concave or convex
- Available sizes are: 12.1 mm, 15.2 mm and 18.4 mm square
- Greater than 5 million switch cycles
- Independent illumination allows for flexibility
- Silent operation as required in some audio/video applications and light and stage technology

Illuminated pushbutton

Illuminated pushbutton, front measurement 12.1 x 12.1 mm, plastic lens colourless transparent, PCP measurement 12.7 x 12.7 mm, 1 NO, IP40

Part No.	Finish	Shape
95-313.720	Matt	Flush
95-313.750	Clear	Flush

Illuminated pushbutton, front measurement 15.2 x 15.2 mm, plastic lens colourless transparent, PCP measurement 15.88 x 15.88 mm, 1 NO, IP40

Part No.	Finish	Shape
95-515.740	Matt	Concave
95-515.720	Matt	Flush
95-515.770	Clear	Concave
95-515.750	Clear	Flush

Illuminated pushbutton

Illuminated pushbutton, front measurement 18.4 x 18.4 mm, plastic lens colourless transparent, PCP measurement 19.05 x 19.05 mm, 1 NO, IP40

Part No.	Finish	Shape
95-414.740	Matt	Concave
95-414.720	Matt	Concave
95-414.770	Clear	Concave
95-414.750	Clear	Flush

A Accessories

Diffuser, 12.1 mm x 12.1 mm (small)

	Part No.	
Red	95-803.220	
Yellow	95-803.420	
Orange	95-803.320	
Green	95-803.520	
Blue	95-803.620	
White	95-803.920	standard

Choose one component from each of the coloured sections to assemble a complete switch.
For other options or further information please contact your local sales office.

ELEMENT | LED | ACCESSORIES

A Accessories

Diffuser, 15.2 mm x 15.2 mm (medium)

	Part No.	
Red	95-805.220	
Yellow	95-805.420	
Orange	95-805.320	
Green	95-805.520	
Blue	95-805.620	
White	95-805.920	standard

Diffuser, 18.4 mm x 18.4 mm (large)

	Part No.	
Red	95-804.220	
Yellow	95-804.420	
Orange	95-804.320	
Green	95-804.520	
Blue	95-804.620	
White	95-804.920	standard

Switching element

Front measurements, 12.1 mm x 12.1 mm (small)
PCP measurements 12.7 mm x 12.7 mm

Part No.
95-313.000

Switching element

Front measurements, 15.2 mm x 15.2 mm (medium)
PCP measurements 15.88 mm x 15.88 mm

Part No.
95-515.000

Front measurements, 18.4 mm x 18.4 mm (medium)
PCP measurements 19.05 mm x 19.05 mm

Part No.
95-414.000

LED

Please note that EAO does not offer LED's for this product.
The required specification is detailed below

SMD-LED type:
P-LCC package or similar, radiation angle approx. 120º
use of smaller SMD-LED is possible.

SMD-LED configurations:
max. 2 SMD-LED's (switch size 12.7 mm)
max. 3 SMD-LED's (switch size 15.88 mm or 19.05 mm)
single colour or multi colour

Height of SMD-LED:
max. 2.1 mm

PUSHBUTTON

Choose one component from each of the coloured sections to assemble a complete switch.
For other options or further information please contact your local sales office.

A Accessories

Lens flat, matt translucent or clear transparent, 12.1 mm x 12.1 mm (small)

Colour	Part No.	Lens shape	Lens material
Neutral	95-703.720	Flat	Matt transparent
Neutral	95-703.750	Flat	Clear transparent

Lens flat, matt translucent or clear transparent, 15.2 mm x 15.2 mm (medium)

Colour	Part No.	Lens shape	Lens material
Neutral	95-705.720	Flat	Matt transparent
Neutral	95-705.750	Flat	Clear transparent
Neutral	95-705.740	Concave	Matt transparent
Neutral	95-705.770	Concave	Clear transparent

Lens flat, matt translucent or clear transparent, 18.4 mm x 18.4 mm (large)

Colour	Part No.	Lens shape	Lens material
Neutral	95-704.720	Flat	Matt transparent
Neutral	95-704.750	Flat	Clear transparent
Neutral	95-704.740	Concave	Matt transparent
Neutral	95-704.770	Concave	Clear transparent
Neutral	95-704.730	Convex	Matt transparent
Neutral	95-704.760	Convex	Clear transparent

A Accessories

Lens remover and mounting tool for use with all three switch sizes

Image	Part No.	Product description
1	95-900.009	Mounting tool
2	95-900.005	Lens remover

Pushbutton- and Illuminated pushbutton

Switching system

Gold plated momentary contact, 1 normally open, self-cleaning

Material

Plastic items
PC, as per UL 94 HB, Cd-free

Material of contacts
CuSn, contact gold-plated, soldering terminal tinned

Mechanical characteristics

Actuating travel
4.5 mm

Actuating force
3 N to end position

Switching point
at 2.3 ±0.8 mm operation

Life time
>5 million operations, as per IEC 60512-5-9a

Electrical characteristics

Illumination
recommended SMD-LED types:
P-LCC package or similar, radiation angle approx. 120°; use of smaller SMD-LED is possible
SMD-LED configurations size:
max. 2 SMD-LEDs for switch size 12.70 mm
max. 3 SMD-LEDs for switch size 15.88 mm and 19.05 mm, single colour or multi-colour
Height of SMD-LED:
max. 2.1 mm

Switch rating
min. 1 mVDC, 100 µA
max. 48 VDC, 50 mA

Electric strength
≤50 mΩ, as per IEC 60512-2-2b at new state

Isolation resistance
>1 TΩ, as per IEC 60512-2-3a between contacts

Electric strength
2.5 kVAC, as per IEC 60512-2-11

Environmental characteristics

Front protection
IP40 before front plate for complete switch

Operating temperature
–25 °C ... +70 °C

Storage temperature
–40 °C ... +80 °C

Vibration resistance
10 g, at 10 – 2000 Hz, 0.75 mm, as per IEC 60512-4-4

Shock resistance
50 g, 11 ms, as per IEC 60512-4-3

95 Pushbutton

Small

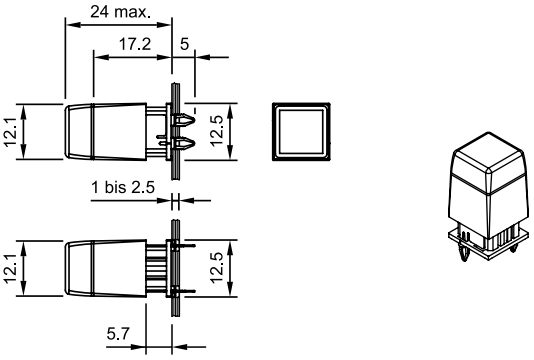

95 Pushbutton

Medium

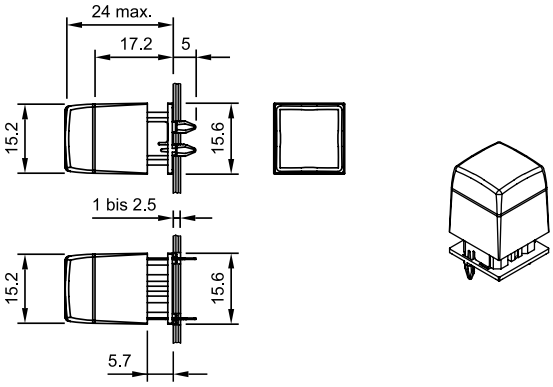

95 Pushbutton

Large

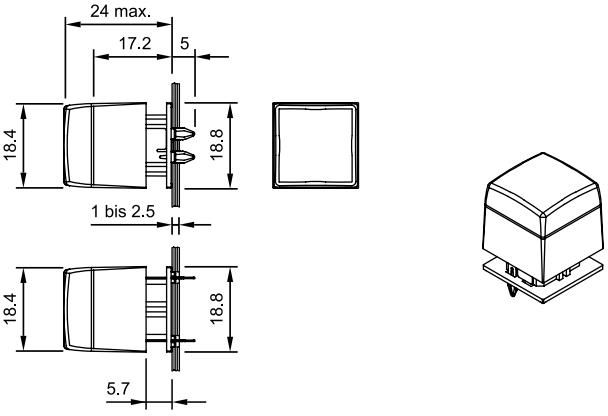

95 PCB Layout

Small

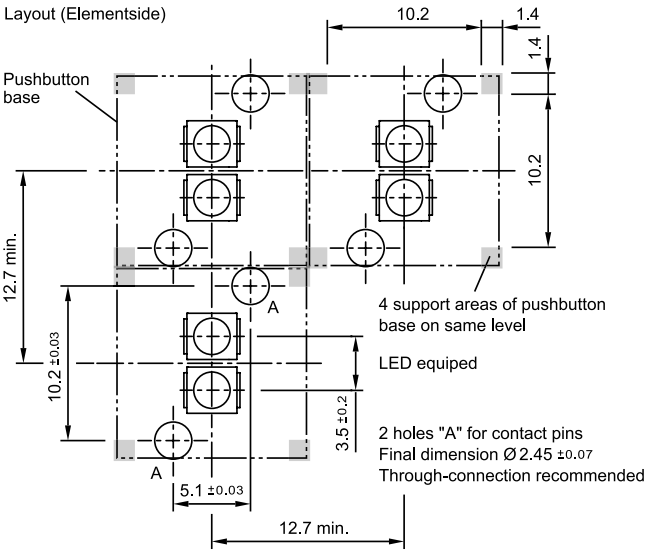

95 PCB Layout

Medium

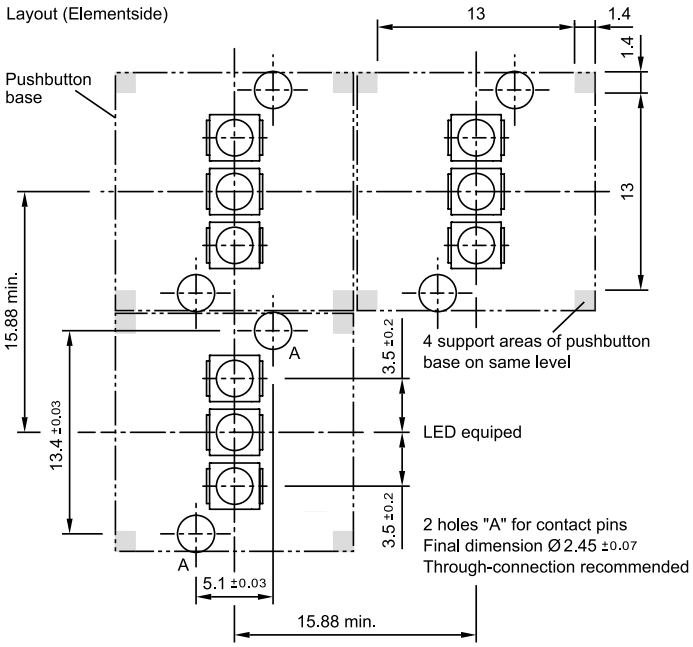

95 PCB Layout
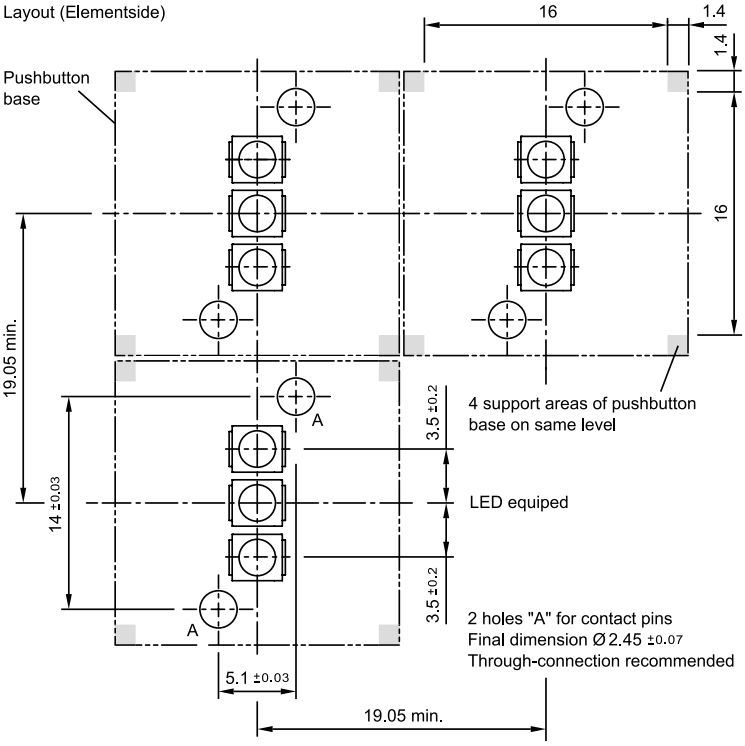
Large