EASY TO USE

- Screen termination by stainless steel band
- Sealing and strain relief of backshell by heat shrink boot

VERSATILE

- Versions for all 38999 series
- Straight, 45°, and 90° profiles
- Optional pigtail termination slots

POLAMCO BT Series Banding Backshells

BT Series backshells terminate the shield with a stainless steel band strap. Additional strain relief can be obtained with a heat-shrink boot.

Part Numbering System

BT H 1 - 17 - 08 - 1 - C SL

SERIES
- **BT** Banding Backshell

CONNECTOR INTERFACE
- **F** 38999 Series I and II
- **H** 38999 Series III and IV

ANGLE
- **1** Straight
- **2** 45°
- **3** 90°

SHELL SIZE
- **09, 11, 13, 15, 17, 19, 21, 23, 25**

ENTRY SIZE
- See Entry Size Table

MATERIAL
- **1** Aluminum Alloy

FINISH
- **C** Electroless Nickel
- **B** Cadmium Olive Drab over Electroless Nickel
- **ZB** Zinc Cobalt Olive Drab over Electroless Nickel
- **ZN** Zinc Nickel Black Passivate over Electroless Nickel

SLOT OPTION
- Omit For Standard (No Slot)
- **SL** With Slots

POLAMCO BT Series Banding Backshells

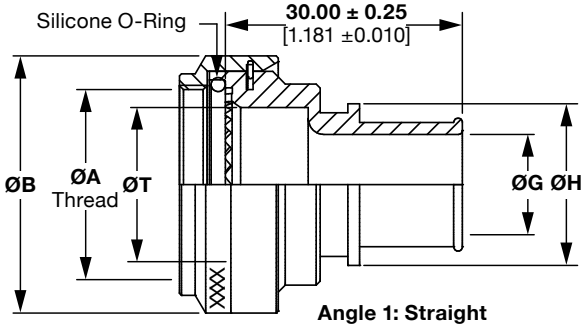

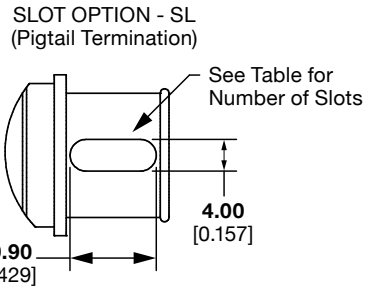

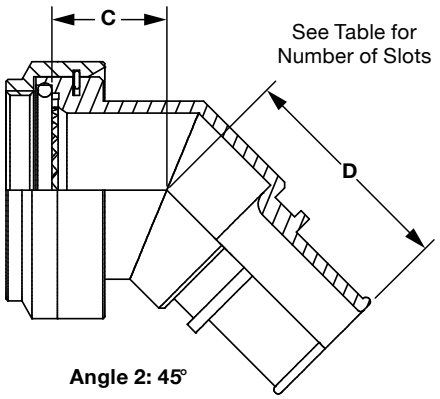

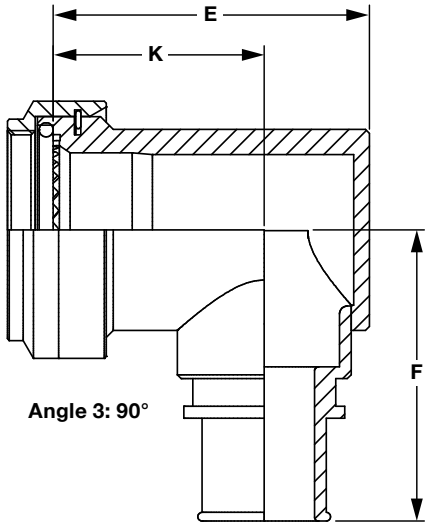

BTF Series for 38999 Series I (Consult TE for Series II)

Shell Size	A Thread BTH (BTF)	ØB Max. BTF	ØT Min.	C Max.	D Max.	E Max.	F Max.	K ±0.5 (0.020)
09	7/16-28	**18.3** 0.720	**6.7** 0.264	**13.1** 0.516	**25.7** 1.012	**25.7** 1.012	**30.5** 1.201	**17.5** 0.689
11	9/16-24	**21.5** 0.846	**10.2** 0.402	**13.9** 0.547	**26.9** 1.059	**26.7** 1.051	**32.2** 1.268	**17.5** 0.689
13	11/16-24	**24.5** 0.965	**13.5** 0.531	**14.5** 0.571	**27.3** 1.075	**31.2** 1.228	**33.7** 1.327	**20.0** 0.787
15	13/16-20	**27.8** 1.094	**16.2** 0.638	**15.5** 0.610	**28.2** 1.110	**37.2** 1.465	**35.2** 1.386	**24.5** 0.965
17	15/16-20	**30.8** 1.213	**19.4** 0.764	**16.1** 0.634	**29.0** 1.142	**40.2** 1.583	**36.9** 1.453	**26.7** 1.051
19	1-1/16-18	**34.1** 1.343	**21.8** 0.858	**16.8** 0.661	**29.3** 1.154	**44.7** 1.760	**38.5** 1.516	**27.0** 1.063
21	1-3/16-18	**37.3** 1.469	**25.1** 0.988	**17.1** 0.673	**30.1** 1.185	**49.2** 1.937	**40.1** 1.579	**30.5** 1.201
23	1-5/16-18	**40.5** 1.594	**28.2** 1.110	**17.7** 0.697	**30.5** 1.201	**51.7** 2.035	**41.6** 1.638	**31.5** 1.240
25	1-7/16-18	**43.7** 1.720	**31.4** 1.236	**18.4** 0.724	**31.4** 1.236	**53.2** 2.094	**43.1** 1.697	**28.5** 1.122

Millimeters Inches

POLAMCO BT Series Banding Backshells

BTH Series for 38999 Series III and IV

Shell Size	A Thread	ØB Max.	ØT Min.	C Max.	D Max.	E Max.	F Max.	K ±0.5 (0.020)
09	M12 x 1.0	**18.0** 0.709	**6.7** 0.264	**13.1** 0.516	**25.7** 1.012	**25.7** 1.012	**30.5** 1.201	**17.5** 0.689
11	M15 x 1.0	**21.0** 0.827	**10.2** 0.402	**13.9** 0.547	**26.9** 1.059	**26.7** 1.051	**32.2** 1.268	**17.5** 0.689
13	M18 x 1.0	**24.5** 0.965	**13.5** 0.531	**14.5** 0.571	**27.3** 1.075	**31.2** 1.228	**33.7** 1.327	**20.0** 0.787
15	M22 x 1.0	**29.0** 1.142	**16.2** 0.638	**15.5** 0.610	**28.2** 1.110	**37.2** 1.465	**35.2** 1.386	**24.5** 0.965
17	M25 x 1.0	**32.5** 1.280	**19.4** 0.764	**16.1** 0.634	**29.0** 1.142	**40.2** 1.583	**36.9** 1.453	**26.7** 1.051
19	M28 x 1.0	**35.5** 1.398	**21.8** 0.858	**16.8** 0.661	**29.3** 1.154	44.7 1.760	**38.5** 1.516	**27.0** 1.063
21	M31 x 1.0	**37.0** 1.457	**25.1** 0.988	**17.1** 0.673	**30.1** 1.185	**49.2** 1.937	**40.1** 1.579	**30.5** 1.201
23	M34 x 1.0	**40.0** 1.575	**28.2** 1.110	**17.7** 0.697	**30.5** 1.201	**51.7** 2.035	**41.6** 1.638	**31.5** 1.240
25	M37 x 1.0	**43.5** 1.713	**31.4** 1.236	**18.4** 0.724	**31.4** 1.236	**53.2** 2.094	**43.1** 1.697	**28.5** 1.122

Millimeters Inches

Entry Size Dimensions

Entry Size	ØG Min.	ØH Max.	No. Of Optional Slots
03	**4.7** 0.185	**13.9** 0.547	1
04	**6.3** 0.248	**13.9** 0.547	1
05	**7.9** 0.311	**15.5** 0.610	1
06	**9.5** 0.374	**17.2** 0.677	2
07	**11.1** 0.437	**18.7** 0.736	2
08	**12.7** 0.500	**20.3** 0.799	2
09	**14.2** 0.559	**21.9** 0.862	2
10	**15.8** 0.622	**23.5** 0.925	2
11	**17.4** 0.685	**25.1** 0.988	2
12	**19.0** 0.748	**26.7** 1.051	2
13	**20.6** 0.811	**28.3** 1.114	2

Millimeters Inches

Entry Size	ØG Min.	ØH Max.	No. Of Optional Slots
14	**22.2** 0.874	**29.9** 1.177	4
15	**23.8** 0.937	**31.5** 1.240	4
16	**25.4** 1.000	**33.1** 1.303	4
17	**27.0** 1.063	**34.7** 1.366	4
18	**28.6** 1.126	**36.3** 1.429	4
19	**30.2** 1.189	**37.9** 1.492	4
20	**31.8** 1.252	**39.5** 1.555	4
21	**33.3** 1.311	**41.1** 1.618	4
22	**35.0** 1.378	**42.7** 1.681	4
23	**36.5** 1.437	**44.3** 1.744	4
24	**38.1** 1.500	**45.9** 1.807	4

Millimeters Inches

EASY TO USE

- Individual screen termination using castellated cone
- No application tooling required for termination or re-work
- Alternate angles and lengths on request

RELIABLE

- Sealing and strain relief of backshell by heat shrink boot
- Solid machined construction for reliable strength and performance
- Cable clamp option available for additional mechanical strain relief

VERSATILE

- Plain nut version available
- Cone clamp feature may be re-used
- Straight, 45 degree, and 90 degree standard
- Aluminum, bronze, and stainless steel

POLAMCO 64 Series Cone Clamp Adapters

The 64 Series adapters terminate individual shields with a castellated cone to compress the braid.

Part Numbering System

64 F 1 - 17 - 1 - C - CC

SERIES
- **64** Cone Clamp Adapter

CONNECTOR INTERFACE
- **F** 38999 Series I and II
- **H** 38999 Series III and IV

ANGLE
- **1** Straight
- **2** 45°
- **3** 90°

SHELL SIZE
- **09, 11, 13, 15, 17, 19, 21, 23, 25**

MATERIAL
- **1** Aluminum Alloy

FINISH
- **C** Electroless Nickel
- **B** Cadmium Olive Drab over Electroless Nickel
- **ZB** Zinc Cobalt Olive Drab over Electroless Nickel
- **ZN** Zinc Nickel Black Passivate over Electroless Nickel

CABLE CLAMP OPTION
- Omit for Plain Nut
- <Other options?>

POLAMCO 64 Series Cone Clamp Adapters

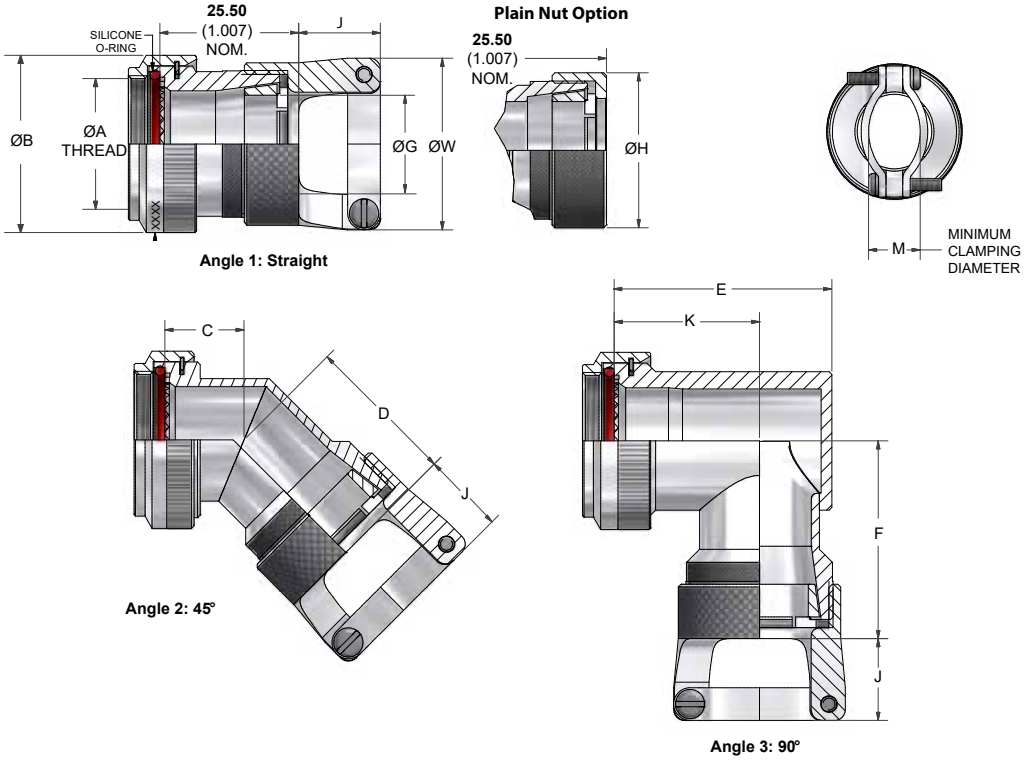

64F Series for 38999 Series I Connectors (Consult TE for Series II)

Shell Size	A Thread (UNEF)	ØB Max.	C ±0.5 (0.020)	D Max.	E Max.	F Max.	ØG Min.	ØW Max.	ØH Max.	J Max.	K ±0.5 (0.020)	M ±0.5 (0.020)
09	7/16-28	**18.0** 0.709	**16.4** 0.646	**24.6** 0.969	**22.7** 0.894	**30.1** 1.185	**6.6** 0.260	**20.7** 0.815	**16.0** 0.630	**15.2** 0.598	**15.0** 0.591	**7.8** 0.307
11	9/16-24	**21.0** 0.827	**17.2** 0.677	**25.4** 1.000	**26.2** 1.031	**31.9** 1.256	**9.3** 0.366	**23.8** 0.937	**19.0** 0.748	**15.2** 0.598	**17.0** 0.669	**8.6** 0.339
13	11/16-24	**24.5** 0.965	**17.6** 0.693	**26.3** 1.035	**29.2** 1.150	**33.4** 1.315	**12.6** 0.496	**27.0** 1.063	**22.0** 0.866	**15.2** 0.598	**18.0** 0.709	**10.2** 0.402
15	13/16-20	**27.8** 1.094	**18.5** 0.728	**26.7** 1.051	**32.2** 1.268	**34.9** 1.374	**14.6** 0.575	**28.6** 1.126	**25.4** 1.000	**15.2** 0.598	**20.0** 0.787	**10.4** 0.409
17	15/16-20	**30.8** 1.213	**19.2** 0.756	**27.5** 1.083	**35.7** 1.406	**36.6** 1.441	**17.7** 0.697	**31.8** 1.252	**28.5** 1.122	**15.2** 0.598	**21.5** 0.846	**12.4** 0.488
19	1-1/16-18	**34.1** 1.343	**19.6** 0.772	**27.8** 1.094	**39.7** 1.563	**38.2** 1.504	**19.8** 0.780	**35.0** 1.378	**32.0** 1.260	**18.2** 0.717	**23.0** 0.906	**15.4** 0.606
21	1-3/16-18	**37.3** 1.469	**20.4** 0.803	**28.6** 1.126	**42.2** 1.661	**39.8** 1.567	**23.0** 0.906	**38.1** 1.500	**35.0** 1.378	**18.2** 0.717	**25.0** 0.984	**17.3** 0.681
23	1-5/16-18	**41.0** 1.614	**20.8** 0.819	**29.5** 1.161	**45.2** 1.780	**41.3** 1.626	**26.2** 1.031	**39.7** 1.563	**38.0** 1.496	**18.2** 0.717	**26.0** 1.024	**18.8** 0.740
25	117/16-18	**43.7** 1.720	**21.7** 0.854	**29.9** 1.177	**48.2** 1.898	**42.8** 1.685	**29.1** 1.146	**44.5** 1.752	**41.0** 1.614	**18.2** 0.717	**28.0** 1.102	**22.4** 0.882

Millimeters Inches

POLAMCO 64 Series Cone Clamp Adapters

64H Series for 38999 Series III and IV

Shell Size	A Thread	ØB Max.	C ±0.5 (0.020)	D Max.	E Max.	F Max.	ØG Min.	ØW Max.	ØH Max.	J Max.	K ±0.5 (0.020)	M ±0.5 (0.020)
09	M12 x 1.0	**18.0** 0.709	**13.1** 0.516	**24.6** 0.969	**25.7** 1.012	**30.1** 1.185	**6.6** 0.260	**20.7** 0.815	**16.0** 0.630	**15.2** 0.598	**17.5** 0.689	**7.8** 0.307
11	M15 x 1.0	**21.0** 0.827	**13.9** 0.547	**25.4** 1.000	**26.7** 1.051	**31.9** 1.256	**9.3** 0.366	**23.8** 0.937	**19.0** 0.748	**15.2** 0.598	**17.5** 0.689	**8.6** 0.339
13	M18 x 1.0	**24.5** 0.965	**14.5** 0.571	**26.3** 1.035	**31.2** 1.228	**33.4** 1.315	**12.6** 0.496	**27.0** 1.063	**22.0** 0.866	**15.2** 0.598	**20.0** 0.787	**10.2** 0.402
15	M22 x 1.0	**29.0** 1.142	**15.5** 0.610	**26.7** 1.051	**37.2** 1.465	**34.9** 1.374	**14.6** 0.575	**28.6** 1.126	**26.5** 1.043	**15.2** 0.598	**24.5** 0.965	**10.4** 0.409
17	M25 x 1.0	**32.5** 1.280	**16.1** 0.634	**27.5** 1.083	**40.2** 1.583	**36.6** 1.441	**17.7** 0.697	**31.8** 1.252	**29.8** 1.173	**15.2** 0.598	**26.7** 1.051	**12.4** 0.488
19	M28 x 1.0	**35.5** 1.398	**16.8** 0.661	**27.8** 1.094	**44.7** 1.760	**38.2** 1.504	**19.8** 0.780	**35.0** 1.378	**33.0** 1.299	**18.2** 0.717	**27.0** 1.063	**15.4** 0.606
21	M31 x 1.0	**37.0** 1.457	**17.1** 0.673	**28.6** 1.126	**49.2** 1.937	**39.8** 1.567	**23.0** 0.906	**38.1** 1.500	**35.0** 1.378	**18.2** 0.717	**30.5** 1.201	**17.3** 0.681
23	M34 x 1.0	**40.0** 1.575	**17.7** 0.697	**29.5** 1.161	**51.7** 2.035	**41.3** 1.626	**26.2** 1.031	**39.7** 1.563	**38.0** 1.496	**18.2** 0.717	**31.5** 1.240	**18.8** 0.740
25	M37 x 1.0	**43.5** 1.713	**18.4** 0.724	**29.9** 1.177	**53.2** 2.094	**42.8** 1.685	**29.1** 1.146	**44.5** 1.752	**41.0** 1.614	**18.2** 0.717	**28.5** 1.122	**22.4** 0.882

Millimeters Inches

VERSATILE

- Interfaces with 38999 Series I, II, III and IV connectors
- Available in straight, 45°, and 90° angle mounting configurations
- Variety of finishes available

LIGHTWEIGHT

- Aluminum alloy saves weight
- Low-profile shield termination

HIGH RELIABILITY

- Magna-form memory ring adapter technology
- Optional pre-terminated braid sock

POLAMCO 70 Series Memory Ring Adapters

The 70 Series adapters help provide a high-reliability, low profile shield termination using magna-form memory ring technology. The adapters are available with an optional pre-terminated braid sock.

Part Numbering System

70 F 1 - 17 - 08 - 1 - C - N

SERIES
- **70** Memory Ring Adapter with Optional Braid Tail Material

CONNECTOR INTERFACE
- **F** 38999 Series I and II
- **H** 38999 Series III and IV

ANGLE
- **1** Straight
- **2** 45°
- **3** 90°

SHELL SIZE
- **09, 11, 13, 15, 17, 19, 21, 23, 25**

ENTRY SIZE
- See Entry Size Table

MATERIAL
- **1** Aluminum Alloy

FINISH
- **C** Electroless Nickel
- B Cadmium Olive Drab over Electroless Nickel
- **ZB** Zinc Cobalt Olive Drab over Electroless Nickel
- **ZN** Zinc Nickel Black Passivate over Electroless Nickel

BRAID TAIL
- Omit for Tinned Copper
- **N** Nickel-Plated Braid

POLAMCO 70 Series Memory Ring Adapters

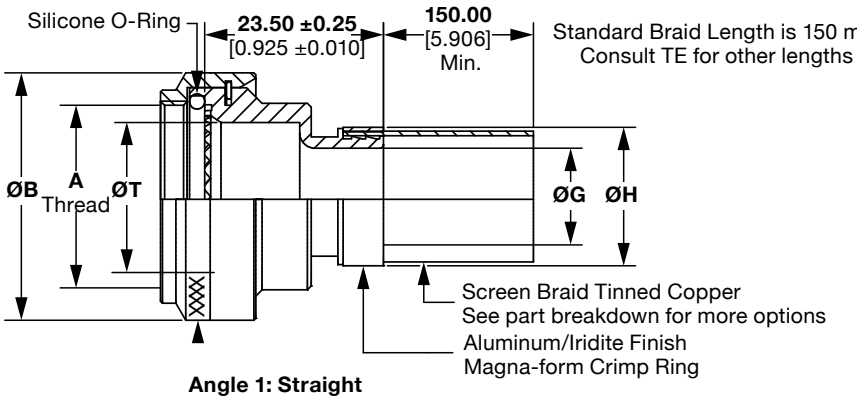

Angle 1: Straight

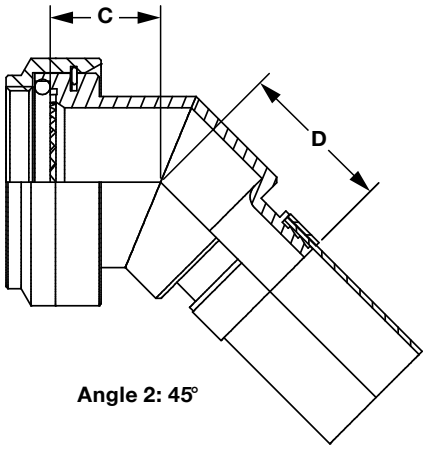

Angle 2: 45°

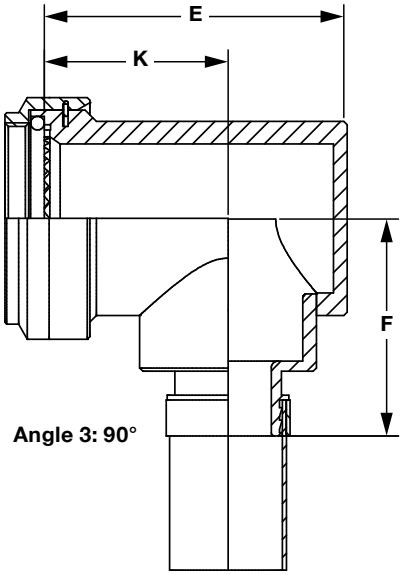

Angle 3: 90°

70F Series for 38999 Series I (Consult TE for Series II)

Shell Size	A Thread (UNEF)	ØB Max.	ØT Min.	C Max.	D ±0.5 (0.020)	E Max.	F Max.	K ±0.5 (0.020)
09	7/16-28	**18.0** 0.709	**6.8** 0.268	**16.4** 0.646	**17.1** 0.673	**22.7** 0.894	**24.0** 0.945	**15.0** 0.591
11	9/16-24	**21.0** 0.827	**10.2** 0.402	**17.2** 0.677	**18.2** 0.717	**26.2** 1.031	**25.7** 1.012	**17.0** 0.669
13	11/16-24	**24.5** 0.965	**13.1** 0.516	**17.6** 0.693	**18.6** 0.732	**29.2** 1.150	**27.2** 1.071	**18.0** 0.709
15	13/16-20	**27.8** 1.094	**16.2** 0.638	**18.5** 0.728	**19.5** 0.768	**32.2** 1.268	**28.7** 1.130	**20.0** 0.787
17	15/16-20	**30.8** 1.213	**19.3** 0.760	**20.2** 0.795	**20.3** 0.799	**35.7** 1.406	**30.4** 1.197	**21.5** 0.846
19	1-1/16-18	**34.1** 1.343	**22.3** 0.878	**19.6** 0.772	**20.8** 0.819	**39.7** 1.563	**32.0** 1.260	**23.0** 0.906
21	1-3/16-18	**37.3** 1.469	**25.8** 1.016	**20.4** 0.803	**21.7** 0.854	**42.2** 1.661	**33.6** 1.323	**25.0** 0.984
23	1-5/16-18	**41.0** 1.614	**28.3** 1.114	**20.8** 0.819	**22.0** 0.866	**45.2** 1.780	**35.1** 1.382	**26.0** 1.024
25	1-7/16-18	**43.7** 1.720	**31.5** 1.240	**21.7** 0.854	**22.9** 0.902	**48.2** 1.898	**36.6** 1.441	**28.0** 1.102

Millimeters Inches

POLAMCO 70 Series Memory Ring Adapters

70H Series for 38999 Series III and IV

Shell Size	A Thread	ØB Max.	ØT Min.	C Max.	D ±0.5 (0.020)	E Max.	F Max.	K ±0.5 (0.020)
09	M12 x 1.0	**18.0** 0.709	**6.7** 0.264	**13.1** 0.516	**17.1** 0.673	**25.7** 1.012	**24.0** 0.945	**17.5** 0.689
11	M15 x 1.0	**21.0** 0.827	**10.2** 0.402	**13.9** 0.547	**18.2** 0.717	**26.7** 1.051	**25.7** 1.012	**17.5** 0.689
13	M18 x 1.0	**24.5** 0.965	**13.5** 0.531	**14.5** 0.571	**18.6** 0.732	**31.2** 1.228	**27.2** 1.071	**20.0** 0.787
15	M22 x 1.0	**29.0** 1.142	**16.2** 0.638	**15.5** 0.610	**19.5** 0.768	**37.2** 1.465	**28.7** 1.130	**24.5** 0.965
17	M25 x 1.0	**32.5** 1.280	**19.4** 0.764	**16.1** 0.634	**20.3** 0.799	**40.2** 1.583	**30.4** 1.197	**26.7** 1.051
19	M28 x 1.0	**35.5** 1.398	**21.8** 0.858	**16.8** 0.661	**20.8** 0.819	**44.7** 1.760	**32.0** 1.260	**27.0** 1.063
21	M31 x 1.0	**37.0** 1.457	**25.1** 0.988	**17.1** 0.673	**21.7** 0.854	**49.2** 1.937	**33.6** 1.323	**30.5** 1.201
23	M34 x 1.0	**40.0** 1.575	**28.2** 1.110	**17.7** 0.697	**22.0** 0.866	**51.7** 2.035	**35.1** 1.382	**31.5** 1.240
25	M37 x 1.0	**43.5** 1.713	**31.4** 1.236	**18.4** 0.724	**22.9** 0.902	**53.2** 2.094	**36.6** 1.441	**28.5** 1.122

Millimeters Inches

Entry Size Dimensions

Entry Size	ØG Min.	ØH Max.	No. Of Optional Slots
03	**4.7** 0.185	**13.9** 0.547	1
04	**6.3** 0.248	**13.9** 0.547	1
05	**7.9** 0.311	**15.5** 0.610	1
06	**9.5** 0.374	**17.2** 0.677	2
07	**11.1** 0.437	**18.7** 0.736	2
08	**12.7** 0.500	**20.3** 0.799	2
09	**14.2** 0.559	**21.9** 0.862	2
10	**15.8** 0.622	**23.5** 0.925	2
11	**17.4** 0.685	**25.1** 0.988	2
12	**19.0** 0.748	**26.7** 1.051	2
13	**20.6** 0.811	**28.3** 1.114	2

Millimeters Inches

Entry Size	ØG Min.	ØH Max.	No. Of Optional Slots
14	**22.2** 0.874	**29.9** 1.177	4
15	**23.8** 0.937	**31.5** 1.240	4
16	**25.4** 1.000	**33.1** 1.303	4
17	**27.0** 1.063	**34.7** 1.366	4
18	**28.6** 1.126	**36.3** 1.429	4
19	**30.2** 1.189	**37.9** 1.492	4
20	**31.8** 1.252	**39.5** 1.555	4
21	**33.3** 1.311	**41.1** 1.618	4
22	**35.0** 1.378	**42.7** 1.681	4
23	**36.5** 1.437	**44.3** 1.744	4
24	**38.1** 1.500	**45.9** 1.807	4

Millimeters Inches

VERSATILE

- Interfaces with 38999 Series I, II, III and IV connectors
- Available in straight, 45°, and 90° angle mounting configurations
- Variety of finishes available

LIGHTWEIGHT

- Aluminum alloy saves weight
- Low-profile shield termination

HIGH RELIABILITY

- Constant force stainless steel spring enables fast, reliable termination

EASY TO USE

- Tool-free screen termination
- Variety of shell sizes available from stock
- Heat-shrink boot option available for strain relief and cable sealing

POLAMCO 91 Series Spring Adapters

The 91 Series adapters use a constant-force spring to help provide a fast, reliable shield termination without tools.

Part Numbering System

91 F 1 - 17 - 08 - 1 - C - SL - HE200

SERIES
91 Spring Adapter

CONNECTOR INTERFACE
F 38999 Series I and II
H 38999 Series III and IV

ANGLE
1 Straight
2 45°
3 90°

SHELL SIZE
09, 11, 13, 15, 17, 19, 21, 23, 25

ENTRY SIZE
See Entry Size Table

MATERIAL
1 Aluminum Alloy

FINISH
C Electroless Nickel
B Cadmium Olive Drab over Electroless Nickel
ZB Zinc Cobalt Olive Drab over Electroless Nickel
ZN Zinc Nickel Black Passivate over Electroless Nickel

SLOT OPTION
Omit For Standard (No Slot)
SL With Slots

SPRING REF
See Entry Size Table
Omit If No Spring Required
HE050, HE100, HE200, HE300, HE400

POLAMCO 91 Series Spring Adapters

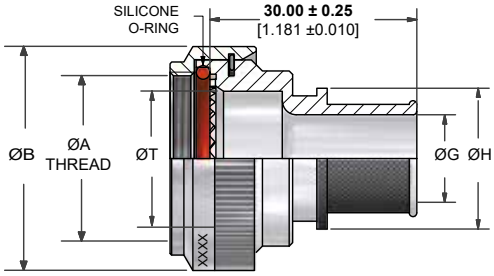

Angle 1: Straight

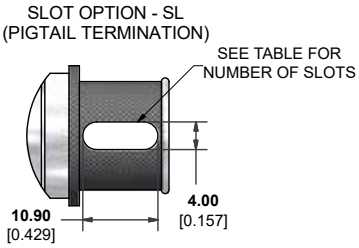

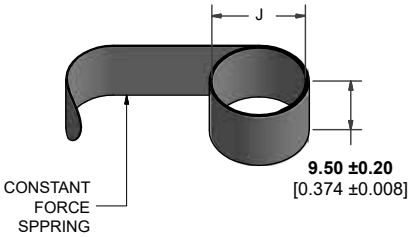

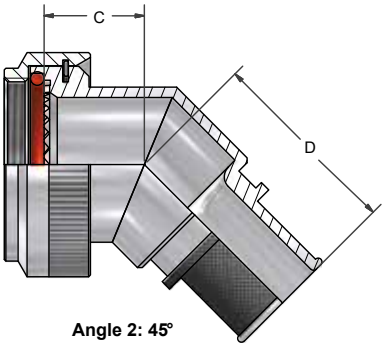

Angle 2: 45°

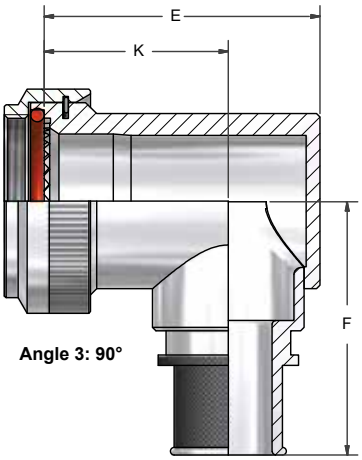

Angle 3: 90°

91F Series for 38999 Series I (Consult TE for Series II)

Shell Size	A Thread (UNEF)	ØB Max.	ØT Min.	C ±0.5 (0.020)	D Max.	E Max.	F Max.	K ±0.5 (0.020)
09	7/16-28	**18.0** 0.709	**6.8** 0.268	**16.4** 0.646	**25.7** 1.012	**22.7** 0.894	**30.5** 1.201	**15.0** 0.591
11	9/16-24	**21.0** 0.827	**10.2** 0.402	**17.2** 0.677	**26.9** 1.059	**26.2** 1.031	**32.2** 1.268	**17.0** 0.669
13	11/16-24	**24.5** 0.965	**13.1** 0.516	**17.6** 0.693	**27.3** 1.075	**29.2** 1.150	**33.7** 1.327	**18.0** 0.709
15	13/16-20	**27.8** 1.094	**16.2** 0.638	**18.5** 0.728	**28.2** 1.110	**32.2** 1.268	**35.2** 1.386	**20.0** 0.787
17	15/16-20	**30.8** 1.213	**19.3** 0.760	**19.2** 0.756	**29.0** 1.142	**35.7** 1.406	**36.9** 1.453	**21.5** 0.846
19	1-1/16-18	**34.1** 1.343	**22.3** 0.878	**19.6** 0.772	**29.3** 1.154	**39.7** 1.563	**38.5** 1.516	**23.0** 0.906
21	1-3/16-18	**37.3** 1.469	**25.8** 1.016	**20.4** 0.803	**30.1** 1.185	**42.2** 1.661	**41.1** 1.618	**25.0** 0.984
23	1-5/16-18	**41.0** 1.614	**28.3** 1.114	**20.8** 0.819	**30.5** 1.201	**45.2** 1.780	**41.6** 1.638	**26.0** 1.024
25	1-7/16-18	**43.7** 1.720	**31.5** 1.240	**21.7** 0.854	**31.4** 1.236	**48.2** 1.898	**43.1** 1.697	**28.0** 1.102

Millimeters Inches

POLAMCO 91 Series Spring Adapters

91H Series for 38999 Series III and IV

Shell Size	A Thread	ØB Max.	ØT Min.	C ±0.5 (0.020)	D Max.	E Max.	F Max.	K ±0.5 (0.020)
09	M12 x 1.0	**18.0** 0.709	**6.7** 0.264	**13.1** 0.516	**25.7** 1.012	**25.7** 1.012	**30.5** 1.201	**17.5** 0.689
11	M15 x 1.0	**21.0** 0.827	**10.2** 0.402	**13.9** 0.547	**26.9** 1.059	**26.7** 1.051	**32.2** 1.268	**17.5** 0.689
13	M18 x 1.0	**24.5** 0.965	**13.5** 0.531	**14.5** 0.571	**27.3** 1.075	**31.2** 1.228	**33.7** 1.327	**20.0** 0.787
15	M22 x 1.0	**29.0** 1.142	**16.2** 0.638	**15.5** 0.610	**28.2** 1.110	**37.2** 1.465	**35.2** 1.386	**24.5** 0.965
17	M25 x 1.0	**32.5** 1.280	**19.4** 0.764	**16.1** 0.634	**29.0** 1.142	**40.2** 1.583	**36.9** 1.453	**26.7** 1.051
19	M28 x 1.0	**35.5** 1.398	**21.8** 0.858	**16.8** 0.661	**29.3** 1.154	**44.7** 1.760	**38.5** 1.516	**27.0** 1.063
21	M31 x 1.0	**37.0** 1.457	**25.1** 0.988	**17.1** 0.673	**30.1** 1.185	**49.2** 1.937	**40.1** 1.579	**30.5** 1.201
23	M34 x 1.0	**40.0** 1.575	**28.2** 1.110	**17.7** 0.697	**30.5** 1.201	**51.7** 2.035	**41.6** 1.638	**31.5** 1.240
25	M37 x 1.0	**43.5** 1.713	**31.4** 1.236	**18.4** 0.724	**31.4** 1.236	**53.2** 2.094	**43.1** 1.697	**28.5** 1.122

Millimeters Inches

Entry Size Dimensions

Entry Size	ØG Min.	ØH Max.	No. Of Optional Slots	Spring Ref	J Max. (Uncon-strained)
03	**4.7** 0.185	**13.9** 0.547	1	HE050	**7.5** 0.295
04	**6.3** 0.248	**13.9** 0.547	1		
05	**7.9** 0.311	**15.5** 0.610	1	HE100	**9.1** 0.358
06	**9.5** 0.374	**17.2** 0.677	2		
07	**11.1** 0.437	**18.7** 0.736	2		
08	**12.7** 0.500	**20.3** 0.799	2	HE200	**12.8** 0.504
09	**14.2** 0.559	**21.9** 0.862	2		
10	**15.8** 0.622	**23.5** 0.925	2		
11	**17.4** 0.685	**25.1** 0.988	2		

Entry Size	ØG Min.	ØH Max.	No. Of Optional Slots	Spring Ref	J Max. (Uncon-strained)
12	**19.0** 0.748	**26.7** 1.051	2	HE300	**17.9** 0.705
13	**20.6** 0.811	**28.3** 1.114	2		
14	**22.2** 0.874	**29.9** 1.177	4		
15	**23.8** 0.937	**31.5** 1.240	4		
16	**25.4** 1.000	**33.1** 1.303	4		
17	**27.0** 1.063	**34.7** 1.366	4	HE400	**21.8** 0.858
18	**28.6** 1.126	**36.3** 1.429	4		
19	**30.2** 1.189	**37.9** 1.492	4		
20	**31.8** 1.252	**39.5** 1.555	4		
21	**33.3** 1.311	**41.1** 1.618	4		
22	**35.0** 1.378	**42.7** 1.681	4		
23	**36.5** 1.437	**44.3** 1.744	4		
24	**38.1** 1.500	**45.9** 1.807	4		

Millimeters Inches

SAVE WEIGHT

- Lightweight open-frame cable clamp
- Backshell machined from solid aluminum to help maximize strength and reliability

VERSATILE

- Interfaces with 38999 Series I, II, III and IV connectors
- Available in straight and 90° angle mounting configurations
- Variety of finishes available

POLAMCO 96 Series Strain Relief Adapters

The 96 Series adapters provide stain relief in an open-frame cable clamp. The backshell is machined from solid aluminum alloy to support strength, reliability, and low weight.

Part Numbering System

96 F 1 - 16 - 1 - C

SERIES
- **96** Strain Relief Adapter

CONNECTOR INTERFACE
- **F** 38999 Series I and II
- **H** 38999 Series III and IV

ANGLE
- **1** Straight
- **3** 90°

DASH NUMBER (SHELL SIZE)
08 (09), **10** (11), **12** (13), **14** (15),
16 (17), **18** (19), **20** (21), **22** (23), **24** (25)

MATERIAL
- **1** Aluminum Alloy

FINISH
- **C** Electroless Nickel
- **B** Cadmium Olive Drab over Electroless Nickel
- **G** Black Anodize, Sulphuric
- **ZB** Zinc Cobalt Olive Drab over Electroless Nickel
- **ZN** Zinc Nickel Black Passivate over Electroless Nickel

POLAMCO 96 Series Strain Relief Adapters

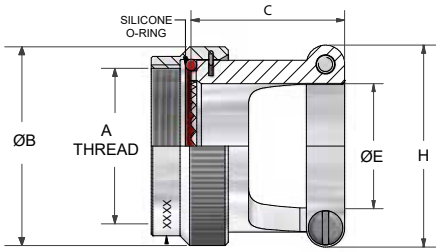

Angle 1: Straight

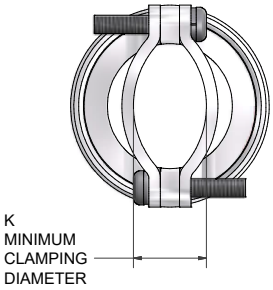

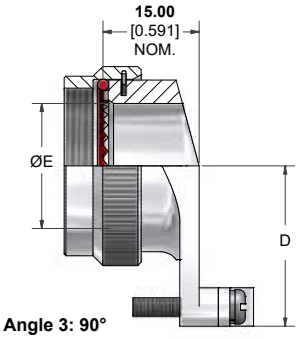

Angle 3: 90°

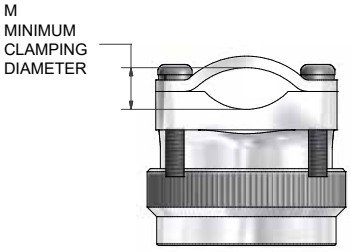

POLAMCO 96 Series Strain Relief Adapters

96F Series for 38999 Series I and II

Dash No.	Shell Size: Series I (Series II)	A Thread (UNEF)	ØB Max.	C Max.	D Max.	ØE Min.	H Max.	J Max.	K ±0.5 (0.020) Clamping Diameter	M ±0.5 (0.020) Clamping Diameter
08	09 (08)	7/16-28	**18.3** 0.720	**21.5** 0.846	**18.8** 0.740	**6.7** 0.264	**19.0** 0.748	**19.0** 0.748	**5.7** 0.224	**4.7** 0.185
10	11 (10)	9/16-24	**21.5** 0.846	**21.5** 0.846	**21.1** 0.831	**10.1** 0.398	**22.2** 0.874	**22.2** 0.874	**6.9** 0.272	**5.3** 0.209
12	13 (12)	11/16-24	**24.5** 0.965	**23.5** 0.925	**23.1** 0.909	**13.0** 0.512	**25.2** 0.992	**25.2** 0.992	**8.5** 0.335	**5.8** 0.228
14	15 (14)	13/16-20	**27.8** 1.094	**23.5** 0.925	**25.5** 1.004	**16.1** 0.634	**28.5** 1.122	**28.5** 1.122	**10.4** 0.409	**7.7** 0.303
16	17 (16)	15/16-20	**30.8** 1.213	**24.5** 0.965	**29.1** 1.146	**19.3** 0.760	**31.7** 1.248	**31.7** 1.248	**11.4** 0.449	**8.2** 0.323
18	19 (18)	1-1/16-18	**34.1** 1.343	**27.5** 1.083	**35.1** 1.382	**21.8** 0.858	**34.9** 1.374	**34.9** 1.374	**14.9** 0.587	**9.7** 0.382
20	21 (20)	1-3/16-18	**37.3** 1.469	**34.5** 1.358	**37.7** 1.484	**25.2** 0.992	**38.0** 1.496	**38.0** 1.496	**16.8** 0.661	**10.7** 0.421
22	23 (22)	1-5/16-18	**40.5** 1.594	**34.5** 1.358	**39.8** 1.567	**28.1** 1.106	**42.8** 1.685	**41.2** 1.622	**23.9** 0.941	**11.8** 0.465
24	25 (24)	1-7/16-18	**43.7** 1.720	**34.5** 1.358	**42.0** 1.654	**31.3** 1.232	**46.0** 1.811	**44.4** 1.740	**22.8** 0.898	**12.7** 0.500

Millimeters Inches

96H Series for 38999 Series III and IV

Shell Size	A Thread	ØB Max.	C Max.	D Max.	ØE Min.	H Max.	J Max.	K ±0.5 Clamping Diameter	M ±0.5 Clamping Diameter
09	M12 x 1.0	**18.0** 0.709	**21.5** 0.846	**20.4** 0.803	**6.7** 0.264	**19.0** 0.748	**20.6** 0.811	**5.7** 0.224	**5.2** 0.205
11	M15 x 1.0	**21.0** 0.827	**21.5** 0.846	**21.4** 0.843	**10.1** 0.398	**22.2** 0.874	**22.2** 0.874	**6.9** 0.272	**5.2** 0.205
13	M18 x 1.0	**24.5** 0.965	**23.5** 0.846	**22.4** 0.882	**13.0** 0.512	**25.2** 0.992	**23.7** 0.933	**8.5** 0.335	**5.6** 0.220
15	M22 x 1.0	**27.5** 1.083	**23.5** 0.925	**23.4** 0.921	**16.1** 0.634	**28.5** 1.122	**26.9** 1.059	**10.4** 0.409	**6.4** 0.252
17	M25 x 1.0	**31.0** 1.220	**24.5** 0.925	**25.4** 1.000	**19.3** 0.760	**31.7** 1.248	**28.5** 1.122	**11.4** 0.449	**6.5** 0.256
19	M28 x 1.0	**34.0** 1.339	**27.5** 0.965	**27.9** 1.098	**21.8** 0.858	**34.9** 1.374	**31.7** 1.248	**14.9** 0.587	**7.0** 0.276
21	M31 x 1.0	**37.0** 1.457	**34.5** 1.083	**31.9** 1.256	**25.2** 0.992	**38.0** 1.496	**34.9** 1.374	**16.8** 0.661	**8.5** 0.335
23	M34 x 1.0	**40.0** 1.575	**37.5** 1.358	**35.4** 1.394	**28.1** 1.106	**42.8** 1.685	**38.0** 1.496	**23.9** 0.941	**9.4** 0.370
25	M37 x 1.0	**43.5** 1.713	**37.5** 1.476	**36.4** 1.433	**31.3** 1.232	**46.0** 1.811	**38.0** 1.496	**22.8** 0.898	**9.4** 0.370

Millimeters Inches

HIGH PERFORMANCE

- Profile of backshell specifically designed to help optimize performance with heat shrink boot
- Optional heat-shrink boot available to help provide strain relief
- Alternative to M85049/62

VERSATILE

- Interfaces with 38999 Series I, II, III and IV connectors
- Available in straight, 45°, and 90° angle mounting configurations
- Variety of finishes available
- Standard range - many sizes available from stock

POLAMCO 97 Series Heat-Shrink Boot Adapters

The 97 Series adapters are designed to help provide high performance when used with an optional heat-shrink boot to provide strain relief. Many shell sizes are available from stock, providing an easy alternative to M85049/62 backshells.

Part Numbering System

97 F 1 - 17 - 1 - C

SERIES
- **97** Heat-Shrink Boot Adapter

CONNECTOR INTERFACE
- **F** 38999 Series I and II
- **H** 38999 Series III and IV

ANGLE
- **1** Straight
- **2** 45°
- **3** 90°

SHELL SIZE
- **09, 11, 13, 15, 17, 19, 21, 23, 25**

ENTRY SIZE
- See Entry Size Table

MATERIAL
- **1** Aluminum Alloy

FINISH
- **C** Electroless Nickel
- **B** Cadmium Olive Drab over Electroless Nickel
- **G** Black Anodize, Sulphuric
- **ZB** Zinc Cobalt Olive Drab over Electroless Nickel
- **ZN** Zinc Nickel Black Passivate over Electroless Nickel

POLAMCO 97 Series Heat-Shrink Boot Adapters

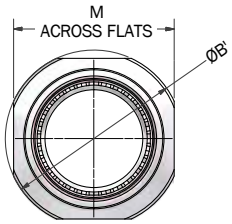

-FN OPTION

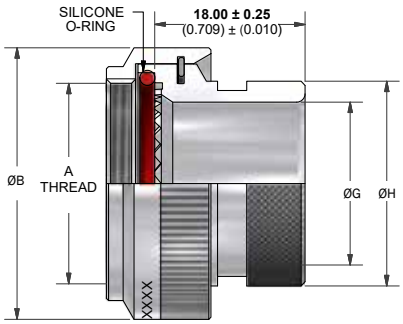

Angle 1: Straight

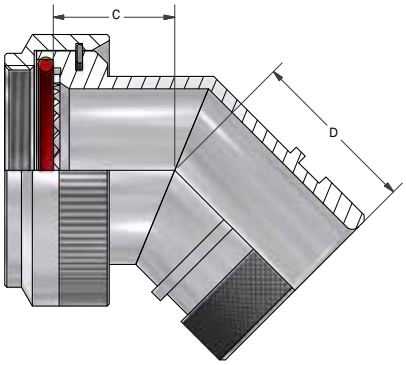

Angle 2: 45°

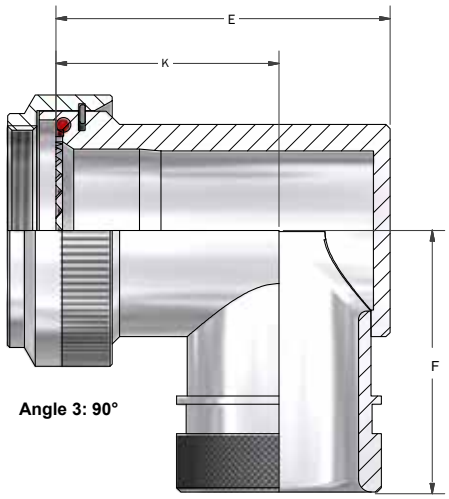

Angle 3: 90°

97F Series for 38999 Series I (Consult TE for Series II)

Shell Size	A Thread	ØB Max.	ØG Max.	ØH Max.	C ±0.5	D Max.	E Max.	F Max.	K ±0.5 (0.020)	Recommended Boot Size
09	7/16-28	**18.0** 0.709	**6.8** 0.268	**13.5** 0.531	**16.4** 0.646	**17.6** 0.693	**22.7** 0.894	**25.5** 1.004	**15.0** 0.591	202K121
11	9/16-24	**21.0** 0.827	**10.2** 0.402	**15.4** 0.606	**17.2** 0.677	**18.4** 0.724	**26.2** 1.031	**27.3** 1.075	**17.0** 0.669	202K121
13	11/16-24	**24.5** 0.965	**13.1** 0.516	**19.7** 0.776	**17.6** 0.693	**19.3** 0.760	**29.2** 1.150	**28.7** 1.130	**18.0** 0.709	202K142
15	13/16-20	**27.8** 1.094	**16.2** 0.638	**21.3** 0.839	**18.5** 0.728	**19.6** 0.772	**32.2** 1.268	**30.2** 1.189	**20.0** 0.787	202K142
17	15/16-20	**30.8** 1.213	**19.3** 0.760	**24.5** 0.965	**19.2** 0.756	**20.4** 0.803	**35.7** 1.406	**31.9** 1.256	**21.5** 0.846	202K153
19	1-1/16-18	**34.1** 1.343	**22.3** 0.878	**26.5** 1.043	**19.6** 0.772	**20.8** 0.819	**39.7** 1.563	**33.5** 1.319	**23.0** 0.906	202K153
21	1-3/16-18	**37.3** 1.469	**25.8** 1.016	**31.0** 1.220	**20.4** 0.803	**21.6** 0.850	**42.2** 1.661	**35.1** 1.382	**25.0** 0.984	202K153
23	1-5/16-18	**41.0** 1.614	**28.3** 1.114	**34.4** 1.354	**20.8** 0.819	**22.5** 0.886	**45.2** 1.780	**36.7** 1.445	**26.0** 1.024	202K163
25	1-7/16-18	**43.7** 1.720	**31.5** 1.240	**36.6** 1.441	**21.7** 0.854	**22.9** 0.902	**48.2** 1.898	**38.1** 1.500	**28.0** 1.102	202K163

Millimeters Inches

POLAMCO 97 Series Heat-Shrink Boot Adapters

97H Series for 38999 Series III and IV

Shell Size	A Thread	ØB Max.	ØB' Max.	ØG Max.	ØH Max.	C ±0.5	D Max.	E Max.	F Max.	K ±0.5 (0.020)	Recommended Boot Size	M
09	M12 x 1.0	**18.0** 0.709	**20.30** 0.799	**6.8** 0.268	**13.5** 0.531	**13.1** 0.516	**17.6** 0.693	**25.7** 1.012	**25.5** 1.004	**17.5** 0.689	202K121	**17.00** 0.669
11	M15 x 1.0	**21.0** 0.827	**23.70** 0.933	**9.9** 0.390	**15.4** 0.606	**13.9** 0.547	**18.4** 0.724	**26.7** 1.051	**27.3** 1.075	**17.5** 0.689	202K121	**30.40** 1.197
13	M18 x 1.0	**24.5** 0.965	**27.15** 1.069	**13.6** 0.535	**19.7** 0.776	**14.5** 0.571	**19.3** 0.760	**31.2** 1.228	**28.7** 1.130	**20.0** 0.787	202K142	**23.85** 0.939
15	M22 x 1.0	**29.0** 1.142	**32.05** 1.262	**15.9** 0.626	**21.3** 0.839	**15.5** 0.610	**19.6** 0.772	**37.2** 1.465	**30.2** 1.189	**24.5** 0.965	202K142	**28.75** 1.132
17	M25 x 1.0	**32.5** 1.280	**35.35** 1.392	**18.9** 0.744	**24.5** 0.965	**16.1** 0.634	**20.4** 0.803	**40.2** 1.583	**31.9** 1.256	**26.7** 1.051	202K153	**32.05** 1.262
19	M28 x 1.0	**35.5** 1.398	**38.55** 1.518	**21.9** 0.862	**26.5** 1.043	**16.8** 0.661	**20.8** 0.819	**44.7** 1.760	**33.5** 1.319	**27.0** 1.063	202K153	**35.25** 1.388
21	M31 x 1.0	**37.0** 1.457	**39.85** 1.569	**25.2** 0.992	**31.0** 1.220	**17.1** 0.673	**21.6** 0.850	**49.2** 1.937	**35.1** 1.382	**30.5** 1.201	202K153	**36.55** 1.439
23	M34 x 1.0	**40.0** 1.575	**42.95** 1.691	**27.4** 1.079	**34.4** 1.354	**17.7** 0.697	**22.5** 0.886	**51.7** 2.035	**36.7** 1.445	**31.5** 1.240	202K163	**39.65** 1.561
25	M37 x 1.0	**43.5** 1.713	**46.12** 1.816	**30.4** 1.197	**36.6** 1.441	**18.4** 0.724	**22.9** 0.902	**53.2** 2.094	**38.1** 1.500	**28.5** 1.122	202K163	**42.82** 1.686

Millimeters Inches

Entry Size Dimensions

Entry Size	ØG Min.	ØH Max.	No. Of Optional Slots
03	**4.7** 0.185	**13.9** 0.547	1
04	**6.3** 0.248	**13.9** 0.547	1
05	**7.9** 0.311	**15.5** 0.610	1
06	**9.5** 0.374	**17.2** 0.677	2
07	**11.1** 0.437	**18.7** 0.736	2
08	**12.7** 0.500	**20.3** 0.799	2
09	**14.2** 0.559	**21.9** 0.862	2
10	**15.8** 0.622	**23.5** 0.925	2
11	**17.4** 0.685	**25.1** 0.988	2
12	**19.0** 0.748	**26.7** 1.051	2
13	**20.6** 0.811	**28.3** 1.114	2

Millimeters Inches

Entry Size	ØG Min.	ØH Max.	No. Of Optional Slots
14	**22.2** 0.874	**29.9** 1.177	4
15	**23.8** 0.937	**31.5** 1.240	4
16	**25.4** 1.000	**33.1** 1.303	4
17	**27.0** 1.063	**34.7** 1.366	4
18	**28.6** 1.126	**36.3** 1.429	4
19	**30.2** 1.189	**37.9** 1.492	4
20	**31.8** 1.252	**39.5** 1.555	4
21	**33.3** 1.311	**41.1** 1.618	4
22	**35.0** 1.378	**42.7** 1.681	4
23	**36.5** 1.437	**44.3** 1.744	4
24	**38.1** 1.500	**45.9** 1.807	4

Millimeters Inches

HIGH PERFORMANCE

- Mesh tape bundle creates windowless EMI barrier, even without overall screen braid
- 360° termination of multiple or individual screens
- Optional heat-shrink boot available for sealing and strain relief

EASY TO USE

- Tool-free termination
- Reworkable

KMA Series Mesh Tape Backshells

The KMA Series backshells are a mesh tape bundle system that creates a windowless EMI barrier, even without overall screen braid by using 360° termination of multiple individual screens.

Part Numbering System

KMA F 1 - 17 - 1 - C - S1 - HE

SERIES
- **KMA** Mesh Tape Backshell

CONNECTOR INTERFACE
- **F** 38999 Series I and II
- **H** 38999 Series III and IV

ANGLE
- **1** Straight
- **2** 45°
- **3** 90°

SHELL SIZE
- **09, 11, 13, 15, 17, 19, 21, 23, 25**

MATERIAL
- **1** Aluminum Alloy

FINISH
- **C** Electroless Nickel
- **B** Cadmium Olive Drab over Electroless Nickel
- **ZB** Zinc Cobalt Olive Drab over Electroless Nickel
- **ZN** Zinc Nickel Black Passivate over Electroless Nickel

SLOT OPTION
- **S1** 12 mm (0.472") Width
- **S2** 20 mm (0.787") Width

TERMINATION OPTION
- **HE** Constant-Force Spring
- Omit For Supplied Without Spring

KMA Series Mesh Tape Backshells

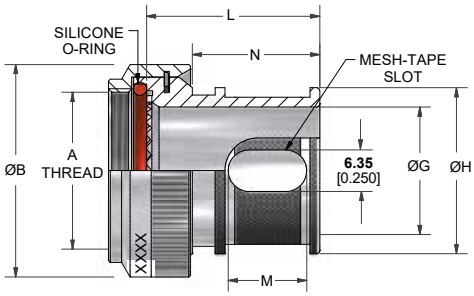

Angle A: Straight

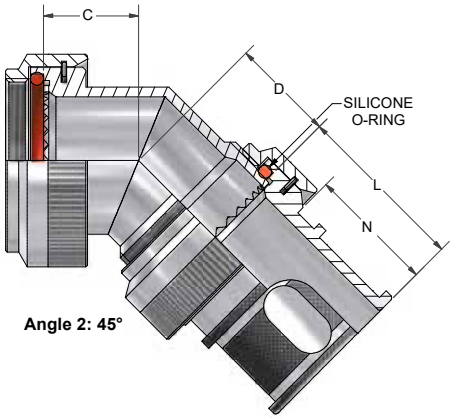

Angle 2: 45°

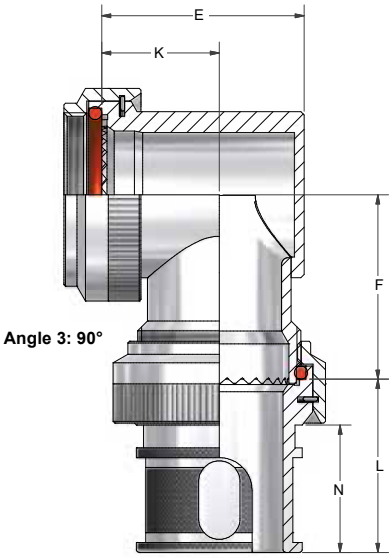

Angle 3: 90°

KMAF Series for 38999 Series I (Consult TE for Series II)

Shell Size	A Thread (UNEF)	ØB Max.	C Max.	D Max.	E Max.	F Max.	K ±0.5 (0.020)	ØG Min.	ØH Max.
09	7/16-28	**18.0** 0.709	**12.5** 0.492	**14.5** 0.571	**20.0** 0.787	**21.5** 0.846	**13.7** 0.539	**6.8** 0.268	**13.2** 0.520
11	9/16-24	**21.0** 0.827	**13.0** 0.512	**15.0** 0.591	**23.0** 0.906	**23.0** 0.906	**14.7** 0.579	**10.2** 0.402	**16.7** 0.657
13	11/16-24	**24.5** 0.965	**13.6** 0.535	**15.5** 0.610	**27.0** 1.063	**24.5** 0.965	**17.2** 0.677	**13.1** 0.516	**20.0** 0.787
15	13/16-20	**27.8** 1.094	**14.0** 0.551	**16.0** 0.630	**28.0** 1.102	**28.5** 1.122	**16.7** 0.657	**16.2** 0.638	**22.7** 0.894
17	15/16-20	**30.8** 1.213	**15.0** 0.591	**17.0** 0.669	**31.0** 1.220	**30.0** 1.181	**18.2** 0.717	**19.3** 0.760	**25.4** 1.000
19	1-1/16-18	**34.1** 1.343	**16.0** 0.630	**18.0** 0.709	**36.0** 1.417	**31.5** 1.240	**21.2** 0.835	**22.3** 0.878	**28.3** 1.114
21	1-3/16-18	**37.3** 1.469	**16.6** 0.654	**18.5** 0.728	**39.0** 1.535	**33.0** 1.299	**22.2** 0.874	**25.8** 1.016	**31.6** 1.244
23	1-5/16-18	**41.0** 1.614	**17.0** 0.669	**19.0** 0.748	**41.0** 1.614	**34.5** 1.358	**23.2** 0.913	**28.3** 1.114	**34.7** 1.366
25	1-7/16-18	**43.7** 1.720	**17.4** 0.685	**19.5** 0.768	**47.0** 1.850	**36.0** 1.417	**27.7** 1.091	**31.5** 1.240	**37.9** 1.492

Millimeters Inches

KMA Series Mesh Tape Backshells

KMAH Series for 38999 Series III and IV

Shell Size	A Thread	ØB Max.	C Max.	D Max.	E Max.	F Max.	K ±0.5 (0.020)	ØG Min.	ØH Max.
09	M12 x 1.0	**18.0** 0.709	**12.5** 0.492	**14.5** 0.571	**20.0** 0.787	**21.5** 0.846	**13.5** 0.531	**6.8** 0.268	**13.2** 0.520
11	M15 x 1.0	**21.0** 0.827	**13.0** 0.512	**15.0** 0.591	**23.0** 0.906	**23.0** 0.906	**14.5** 0.571	**10.3** 0.406	**16.7** 0.657
13	M18 x 1.0	**24.5** 0.965	**13.6** 0.535	**15.5** 0.610	**27.0** 1.063	**24.5** 0.965	**17.0** 0.669	**13.6** 0.535	**20.0** 0.787
15	M22 x 1.0	**29.0** 1.142	**14.0** 0.551	**16.0** 0.630	**28.0** 1.102	**28.5** 1.122	**16.5** 0.650	**16.3** 0.642	**22.7** 0.894
17	M25 x 1.0	**32.5** 1.280	**15.0** 0.591	**17.0** 0.669	**31.0** 1.220	**30.0** 1.181	**18.0** 0.709	**19.5** 0.768	**25.4** 1.000
19	M28 x 1.0	**35.5** 1.398	**16.0** 0.630	**18.0** 0.709	**36.0** 1.417	**31.5** 1.240	**21.0** 0.827	**21.9** 0.862	**28.3** 1.114
21	M31 x 1.0	**37.0** 1.457	**16.6** 0.654	**18.5** 0.728	**39.0** 1.535	**33.0** 1.299	**22.0** 0.866	**25.2** 0.992	**31.6** 1.244
23	M34x1.0	**40.0** 1.575	**17.0** 0.669	**19.0** 0.748	**41.0** 1.614	**34.5** 1.358	**23.0** 0.906	**28.3** 1.114	**34.7** 1.366
25	M37x1.0	**43.5** 1.713	**17.4** 0.685	**19.5** 0.768	**47.0** 1.850	**36.0** 1.417	**27.5** 1.083	**31.5** 1.240	**37.9** 1.492

Millimeters Inches

INDUSTRY STANDARD

- Meets AS85049 NAVAIR standards

RELIABLE

- Self-coupling locking nut provides excellent mechanical protection against loosening under vibration
- Corrosion resistant stainless steel

EASY TO USE

- Band straps available flat for side entry or precoiled for end entry
- Side-entry band straps allow easier installation and repair

VERSATILE

- Three band strap widths

Raychem AS85049 Band Straps

The AS85049 industry standard is used on most military circular connectors, including M38999. The band strap termination system provides ease of installation and repair. TE offers the corrosion-resisting steel bands in three styles to help meet your shield termination needs and termination tool of your choice.

APPLICATION TOOLING

- M85049/128-7 & 8 AS81306/1-02
- M85049/128-3 & 4 AS81306/1-01
- M85049/128-1 & 2 AS81306/2-01

Part Numbering System

M85049/128 - X

CONFIGURATION

1 Flat, 6.22 (0.245) Width
2 Precoiled, 6.22 (0.245) Width
3 Flat, 6.35 (0.250) Width
4 Precoiled, , 6.35 (0.250) Width
7 Flat, 3.05 (0.120) Width
8 Precoiled, 3.05 (0.120) Width

Raychem AS85049 Band Straps

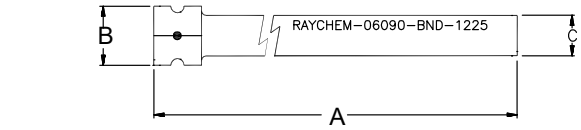

FIGURE 1
CONFIGURATION 1
FLAT

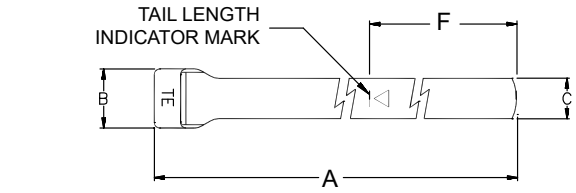

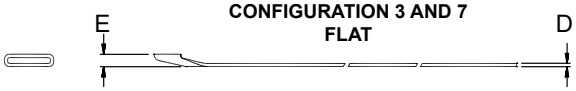

FIGURE 3
CONFIGURATION 3 AND 7
FLAT

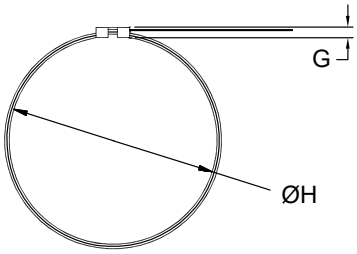

FIGURE 2
CONFIGURATION 2
PRECOILED

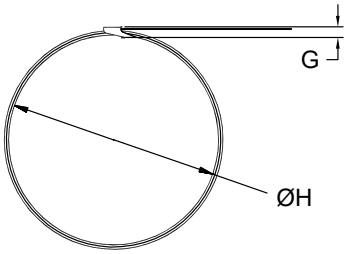

FIGURE 4
CONFIGURATION 4 AND 8
PRECOILED

Configurations and Dimensions

Configuration	Figure	A± 1.52 (.060)	B± 0.79 (.031)	C± 0.25 (.010)	D Ref.	E Ref.	F Ref.	G Max.	H Ref.
1	1	**355.6** 14.0	**8.33** 0.328	**6.22** 0.245	**0.48** 0.019	**2.54** 0.100	—	—	—
2	2	—	—	—	—	—	—	**3.56** 0.140	**44.46** 1.750
3	3	**362.10** 14.526	**8.89** 0.350	**6.35** 0.250	**0.51** 0.020	**3.30** 0.130	**51.59** 2.031	—	—
4	4	—	—	—	—	—	—	**3.81** 0.150	**44.45** 1.750
7	3	**206.38** 8.125	**4.95** 0.195	**3.05** 0.120	**0.38** 0.015	**1.35** 0.053	**51.59** 2.031	—	—
8	4	—	—	—	—	—	—	**1.85** 0.073	**21.8** 0.860

Millimeters Inches

INDUSTRY STANDARD

- Meets AS85049 NAVAIR standards
- Terminates a shielded cable

RELIABLE

- Detented self-locking coupling nut with audible click
- Sealed adapter-to-connector interface
- Accepts lipped heat-shrinkable boots

VERSATILE

- Straight, 45°, and 90° configurations
- Cadmium, electroless nickel, or black zinc nickel plating

APPLICATIONS

- Aerospace
- Marine
- Military Ground Vehicles
- Space-Based Systems

Raychem AS85049 Adapters and Bandstraps

Meeting NAVAIR requirements, Raychem AS85049 adapters help provide a reliable termination of shielded cables. The detented self-locking coupling nut helps provide mechanical protection against loosening under vibration and provides audible indication of proper engagement.

MATERIALS

- **Adapters:** Aluminum
- **Plating:** Olive drab cadmium, electroless nickel, or black zinc nickel

Part Numbering System

M85049/ 88 13 - 15 Z 02

PRODUCT DESIGNATOR
M85049 AS85049 Adapters

SPECIFICATION SHEET
D38999 Series I and II
85 Straight Adapter
86 90° Adapter
87 45° Adapter

D38999 Series I and II
88 Straight Adapter
89 90° Adapter
90 45° Adapter

CONFIGURATION
Use dash for detented self-locking
Omit otherwise

SHELL SIZE
09, 11, 13, 15, 17, 19, 21, 23, 25

FINISH
W Cadmium
N Nickel
Z Black Zinc Nickel

ENTRY SIZE
02 Small
03 Large

Raychem AS85049 Adapters and Bandstraps

Straight Adapters
AS85049/85 Adapters for 38999 Series I and II
AS85049/88 Adapters for 38999 Series III and IV

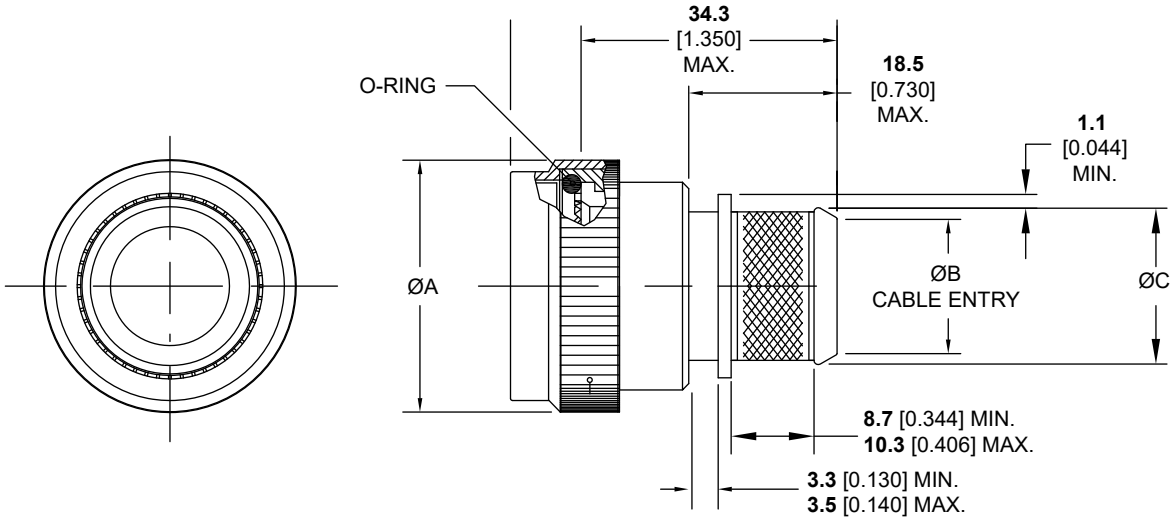

Shell Size		A Dia. Max.	B Dia. ±.010		C Dia. Ref	
			02	03	02	03
9	A	**21.8** 0.858	N/A	**6.4** 0.250	N/A	**10.0** 0.395
11	B	**25.0** 0.984	N/A	**7.9** 0.312	N/A	**11.6** 0.457
13	C	**29.4** 1.157	**7.9** 0.312	**11.1** 0.438	**11.6** 0.457	**14.8** 0.583
15	D	**32.5** 1.279	**11.1** 0.438	**14.3** 0.562	**14.8** 0.583	**18.0** 0.707
17	E	**35.7** 1.406	**12.7** 0.500	**15.9** 0.625	**16.4** 0.645	**19.6** 0.770
19	F	**38.5** 1.516	**15.9** 0.625	**19.1** 0.750	**19.6** 0.770	**22.7** 0.895
21	G	**41.7** 1.642	**15.9** 0.625	**20.6** 0.812	**19.6** 0.770	**24.3** 0.957
23	H	**44.9** 1.768	**17.5** 0.688	**23.8** 0.938	**21.1** 0.829	**27.5** 1.083
25	J	**48.0** 1.889	**19.1** 0.750	**25.4** 1.000	**22.7** 0.895	**29.1** 1.145

Millimeters Inches

Raychem AS85049 Adapters and Bandstraps

45° Adapters
AS85049/86 Adapters for 38999 Series I and II
AS85049/89 Adapters for 38999 Series III and IV

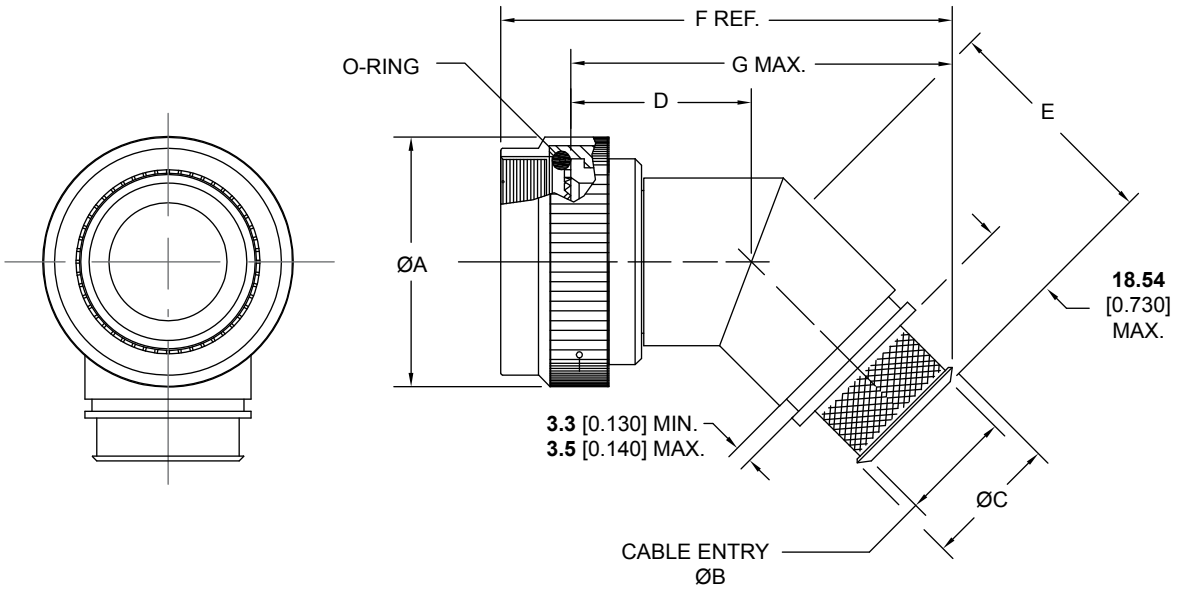

Shell Size		A Dia. Max.	B Dia. ±.010		C Dia. Ref		D	E	F Ref.		G Max.	
			02	03	02	03			02	03	02	03
9	A	**21.8** 0.858	N/A	**6.4** 0.250	N/A	**10.0** 0.395	**25.7** 1.01	**29.5** 1.16	N/A	**56.3** 2.22	N/A	**50.0** 1.97
11	B	**25.0** 0.984	N/A	**7.9** 0.312	N/A	**11.6** 0.457	**26.2** 1.03	**30.2** 1.19	N/A	**57.9** 2.28	N/A	**51.6** 2.03
13	C	**29.4** 1.157	**7.9** 0.312	**11.1** 0.438	**11.6** 0.457	**14.8** 0.583	**26.9** 1.06	**30.7** 1.21	**59.1** 2.33	**60.2** 2.37	**52.8** 2.08	**53.9** 2.12
15	D	**32.5** 1.279	**11.1** 0.438	**14.3** 0.562	**14.8** 0.583	**18.0** 0.707	**27.4** 1.08	**31.5** 1.24	**61.2** 2.41	**62.4** 2.46	**54.9** 2.16	**56.1** 2.21
17	E	**35.7** 1.406	**12.7** 0.500	**15.9** 0.625	**16.4** 0.645	**19.6** 0.770	**28.2** 1.11	**32.0** 1.26	**62.9** 2.48	**64.0** 2.52	**56.6** 2.23	**57.7** 2.27
19	F	**38.5** 1.516	**15.9** 0.625	**19.1** 0.750	**19.6** 0.770	**22.7** 0.895	**28.4** 1.12	**32.3** 1.27	**64.5** 2.54	**65.6** 2.58	**58.2** 2.29	**59.3** 2.33
21	G	**41.7** 1.642	**15.9** 0.625	**20.6** 0.812	**19.6** 0.770	**24.3** 0.957	**29.2** 1.15	**33.0** 1.30	**65.8** 2.59	**67.5** 2.66	**59.5** 2.34	**61.2** 2.41
23	H	**44.9** 1.768	**17.5** 0.688	**23.8** 0.938	**21.1** 0.829	**27.5** 1.083	**29.7** 1.17	**33.8** 1.33	**67.4** 2.65	**69.6** 2.74	**61.1** 2.40	**63.3** 2.49
25	J	48.0 1.889	**19.1** 0.750	**25.4** 1.000	**22.7** 0.895	**29.1** 1.145	**30.5** 1.20	**34.3** 1.35	**69.1** 2.72	**71.3** 2.81	**62.8** 2.47	**65.0** 2.56

Millimeters Inches

Raychem AS85049 Adapters and Bandstraps

90° Adapters
AS85049/87 Adapters for 38999 Series I and II
AS85049/90 Adapters for 38999 Series III and IV

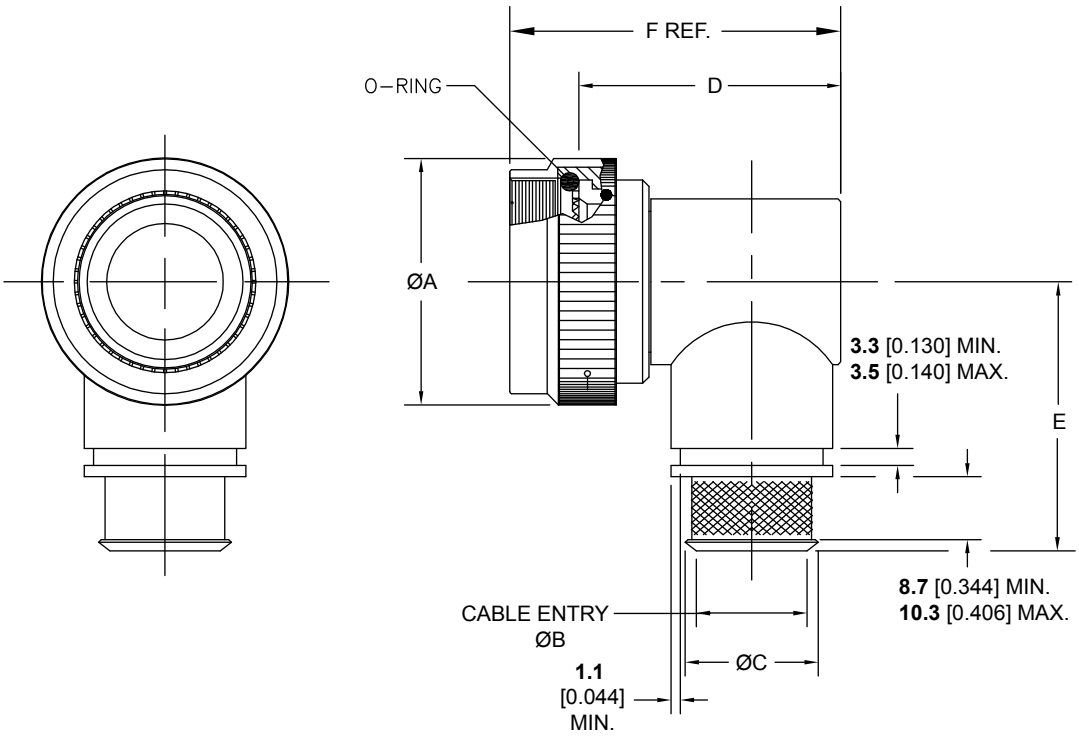

Shell Size		A Dia. Max.	B Dia. ±.010		C Dia. Ref		D	E	F Ref.
			02	03	02	03			
9	A	**21.8** 0.858	N/A	**6.4** 0.250	N/A	**10.0** 0.395	**34.9** 1.375	**36.0** 1.417	**41.2** 1.623
11	B	**25.0** 0.984	N/A	**7.9** 0.312	N/A	**11.6** 0.457	**36.5** 1.437	**37.6** 1.480	**42.8** 1.685
13	C	**29.4** 1.157	**7.9** 0.312	**11.1** 0.438	**11.6** 0.457	**14.8** 0.583	**39.7** 1.562	**39.4** 1.553	**46.0** 1.810
15	D	**32.5** 1.279	**11.1** 0.438	**14.3** 0.562	**14.8** 0.583	**18.0** 0.707	**42.8** 1.687	**41.0** 1.614	**49.1** 1.935
17	E	**35.7** 1.406	**12.7** 0.500	**15.9** 0.625	**16.4** 0.645	**19.6** 0.770	**44.4** 1.750	**42.6** 1.678	**50.8** 1.998
19	F	**38.5** 1.516	**15.9** 0.625	**19.1** 0.750	**19.6** 0.770	**22.7** 0.895	**47.6** 1.875	**45.0** 1.773	**53.9** 2.123
21	G	**41.7** 1.642	**15.9** 0.625	**20.6** 0.812	**19.6** 0.770	**24.3** 0.957	**49.2** 1.938	**45.6** 1.796	**55.5** 2.186
23	H	**44.9** 1.768	**17.5** 0.688	**23.8** 0.938	**21.1** 0.829	**27.5** 1.083	**52.4** 2.062	**47.2** 1.859	**58.7** 2.310
25	J	**48.0** 1.889	**19.1** 0.750	**25.4** 1.000	**22.7** 0.895	**29.1** 1.145	**54.0** 2.125	**48.7** 1.919	**60.3** 2.373

Millimeters Inches

Raychem AS85049 Adapters and Bandstraps

AS85049/128 Band Straps

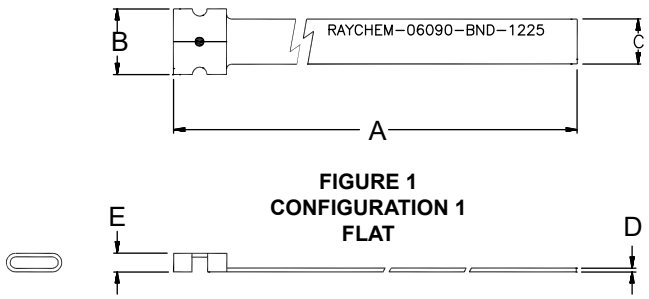

FIGURE 1
CONFIGURATION 1
FLAT

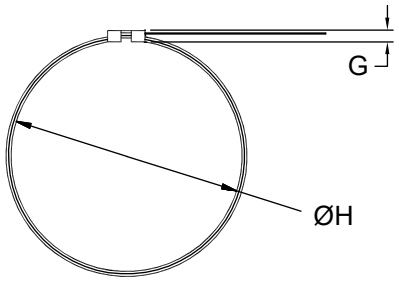

FIGURE 2
CONFIGURATION 2
PRECOILED

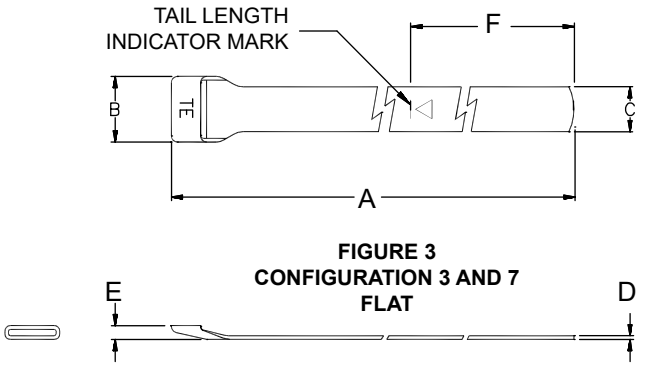

FIGURE 3
CONFIGURATION 3 AND 7
FLAT

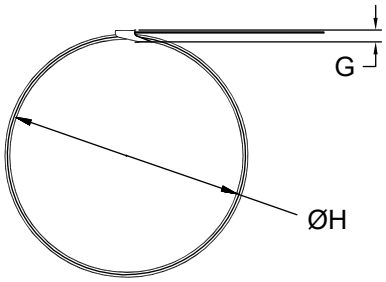

FIGURE 4
CONFIGURATION 4 AND 8
PRECOILED

HIGH PERFORMANCE

- Excellent EMC shielding performance
- Excellent mechanical and environmental resistance
- Provides strain relief on each individual cable

EASY TO USE

- One-piece assembly for simple installation
- Easy reentry
- Simplified maintenance and repair

VERSATILE

- Accommodates up to four shielded cables per ferrule
- Compact size for easy installation in confined areas
- Available for circular connectors in straight, 45°, and 90° assemblies, plus swept and long bodies.

APPLICATIONS

- Civilian and military aircraft
- Avionics
- Missiles and launch support systems
- Armored and military support vehicles
- Military ships (total shipboard hardening)
- Military communications
- Engines (FADEC harness hardening)

Raychem HexaShield EMC Adaptors

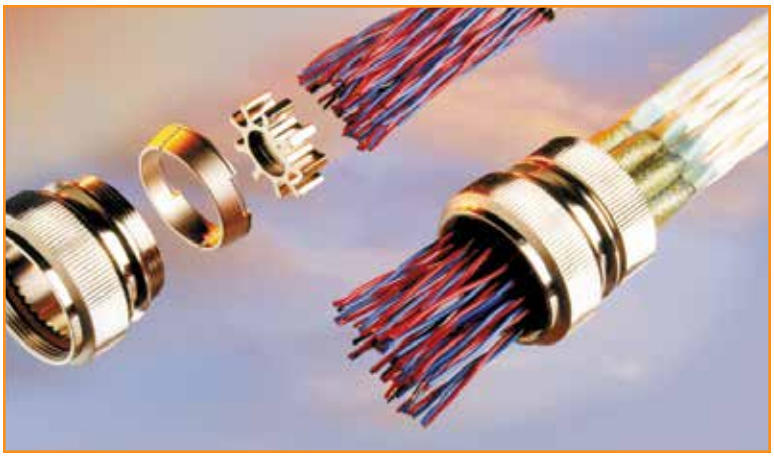

High-Performance EMC Protection for Harsh Military and Commercial Environments

Raychem HexaShield high-performance adaptors help provide excellent EMC protection and reliability in a variety of military and commercial applications.

Easy to install, maintain and repair, HexaShield adaptors help provide outstanding shielding effectiveness by providing 360-degree EMC shielding on the termination area of each individual cable. They are available for circular connectors in a variety of angles, plus swept and long body configurations.

HexaShield adaptors outperform traditional pigtail terminations, especially in HIRF application. They provide excellent EMC protection with minimal degradation of shielding performance. The adaptors also help provide excellent mechanical and environmental protection.

Specifications

MATERIALS

- **Shell:** Aluminum alloy
- **Platings:** Electroless nickel (MIL-DTL-26074) or olive drab cadmium (QQ-P-416 Type II, Class 3)

INSTALLATION PROCEDURES

- **RPIP-696-00:** HEX-A-02X and HET-A-04X
- **RPIP-696-03:** HET-03X

GENERAL PROCEDURES

- **RPIP-696-07:** Cylindrical connectors, right-angle body
- **RPIP-696-04:** Cylindrical connectors, straight body

Raychem HexaShield EMC Adaptors

HexaShield Adaptors for Circular Connectors

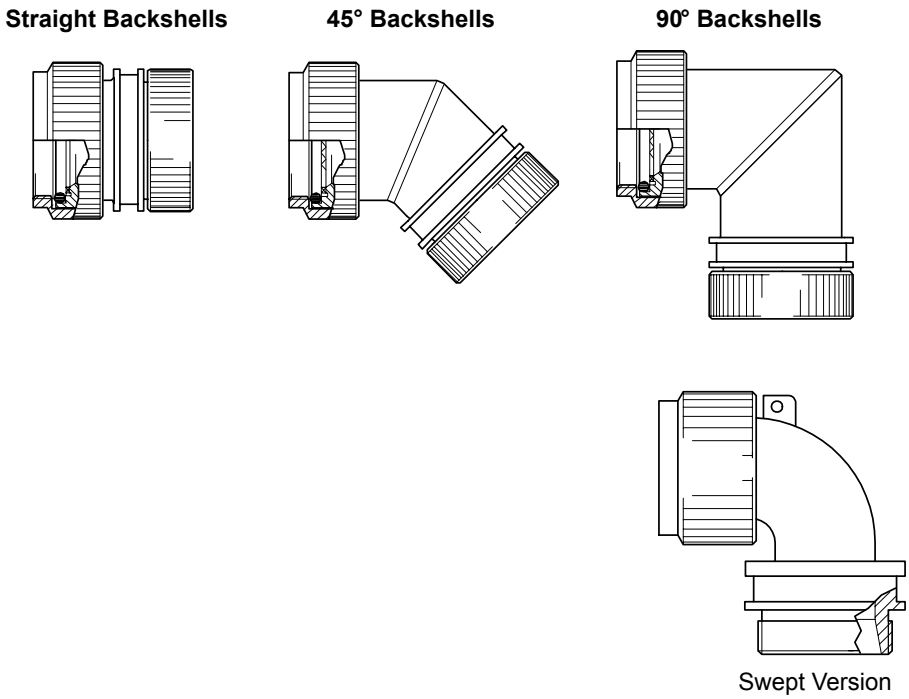

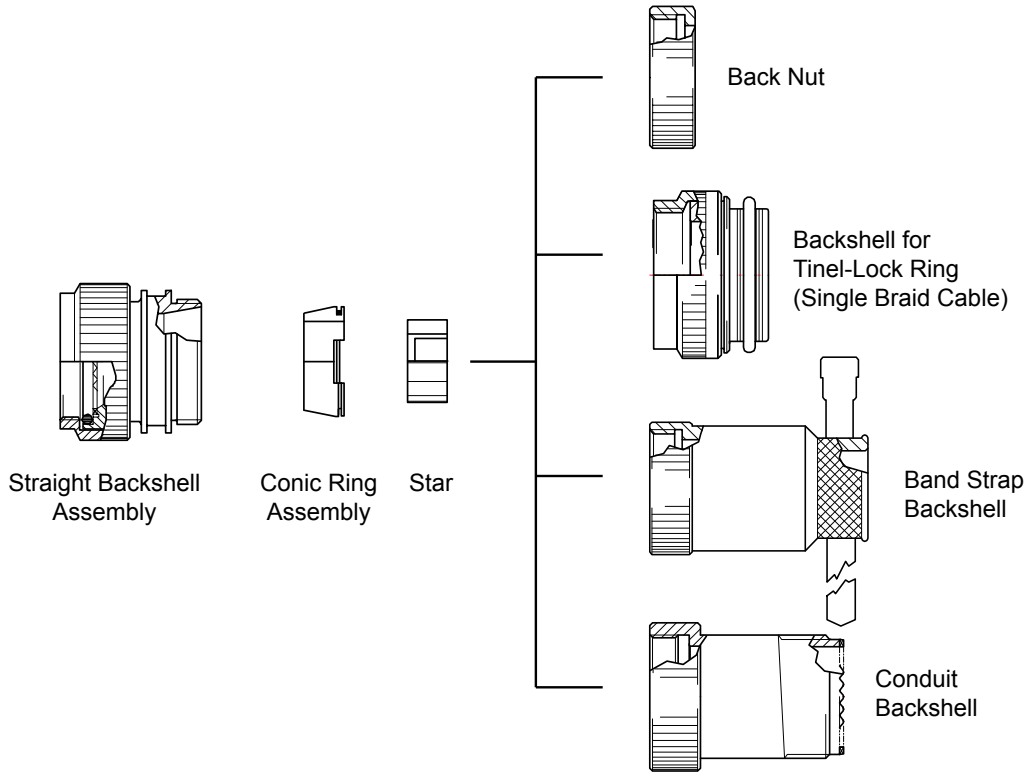

Raychem HexaShield EMC Adaptors

HexaShield Adaptor for Circular Connectors

Part Numbering System

HEXYY L - AY - 00 S - YY - AY - Y - DS

CONNECTOR CODE NUMBER
- **40** MIL-DTL-38999 Series 3 and 4
- **41** MIL-DTL-38999 Series 1 and 2

L Long Body (Optional)
See SCD for Availability

PLATING
- **B** Cadmium
- **C** Electroless Nickel

CONFIGURATION
- **00** Straight Body
- **45** 45-Degree Angle Body
- **90** 90-Degree Angle Body

S Swept Version

HEXASHIELD SIZE CODE
09, 11, 13, 15, 17, 19, 21, 23, 25

AXIMUM NUMBER OF FERRULES
See Applicable SCD for Availability

BACK NUT TYPE
- **1** Standard
- **2** Clamping Nut for Tinel Ring
- **3** Clamping Nut with Bandstrap
- **C** Clamping Nut for Conduit Applicator

DRILLED STAR
See Applicable SCD for Star Options

HexaShield Ferrule Kits

Use	Part No.	
	Cadmium Finish	Electroless Nickel Finish
Small-Size Cable with SolderShield Terminator	HET-A-02B	HET-A-02C
Ferrules with Heat-Shrinkable Tubing for Unshielded Cables	HET-A-03B	HET-A-03C
Large-Size Cable with SolderShield Terminator	HET-A-04B	HET-A-04C
Ferrule, Solid Blank for Use When HET-A Is Not Needed	HEX07-AB	HEX07-AC

Raychem HexaShield EMC Adaptors

Generalized System Performance
(Actual system performance
in any one test method may differ.)

Transfer Impedance

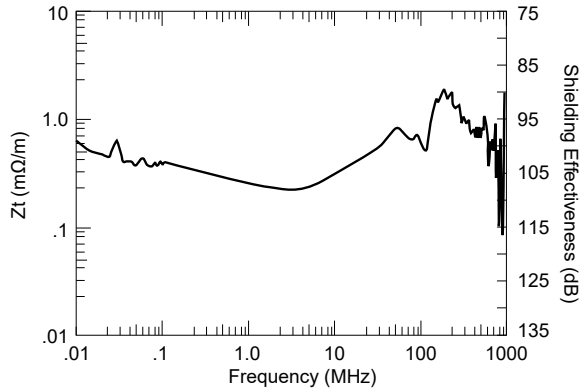

Protection Level

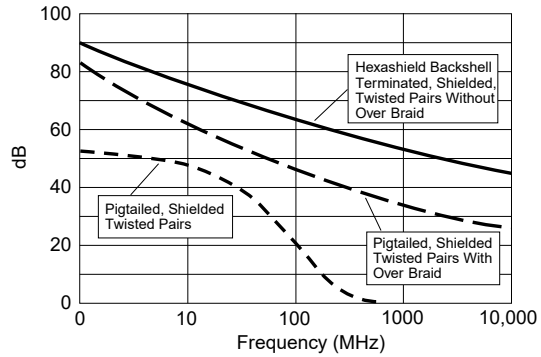

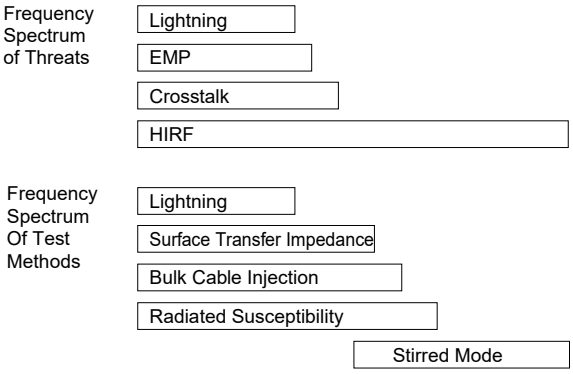

WEIGHT-SAVING DESIGN

- Lightweight composite materials
- Simple design helps to minimize amount of material
- Well suited to light-duty applications

SEALED

- Grommets provide sealing of individual wires

ACT00 Lightweight Composite Tie-Style Strain Relief Adapters

ACT00 strain relief adapters offer composite bodies to help provide a simple, lightweight strain relief for cable uses in light-duty application. Cable can be secured to the body adapter with a tie wrap. Body adapters are available with various conductive platings to help support grounding, while a secondary grommet provides wire sealing.

The adapters are available with inserts to match the insert arrangement of the connector on which it is used.

MATERIALS

- Coupling Nut and Body Adapter: Composite
- Body Adapter Finish: Nickel, tin, or olive drab cadmium
- Secondary Grommet: Silicone elastomer

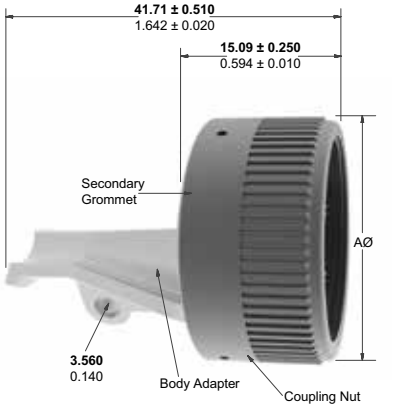

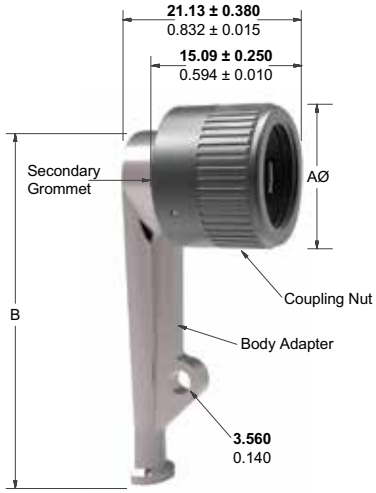

Shell Size	ØA ±0.15 (0.006)	B ±0.80 (0.031)	Strength Bending Moment, Min. (kg, lb.)
9 (A)	**0.650** 0.026	**1.948** 0.077	**11** 25
11 (B)	**0.775** 0.031	**2.010** 0.079	**11** 25
13 (C)	**0.905** 0.036	**2.075** 0.082	**11** 25
15 (D)	**1.030** 0.041	**2.135** 0.084	**22** 50
17 (E)	**1.160** 0.046	**2.198** 0.087	**22** 50
19 (F)	**1.270** 0.050	**2.258** 0.089	**22** 50
21 (G)	**1.400** 0.055	**2.320** 0.091	**34** 75
23 (H)	**1.525** 0.060	**2.383** 0.094	**34** 75
25 (J)	**1.655** 0.065	**2.445** 0.096	**45** 100

Millimeters Inches

ACT00 Lightweight Composite Tie-Style Strain Relief Adapters

Part Numbering System

ACT00 U B - A - EL 38 P

SERIES
ACT00

FINISH
- **A** Unplated Composite, Black
- **M** Nickel-Plated Body Adapter
- **R** Tin-Plated Body Adapter
- **W** Olive Drab Cadmium-Plated Body Adapter

CONFIGURATION

SHELL SIZE
A, B, C, D, E, F, G, H, J

TYPE
- **EL** Environmental, Straight, Light Duty
- **EN** Environmental, 90 Degree, Light Duty

CABLE INSERT ARRANGEMENT
- **00** No Insert Required
- See Cable Code Table

INSERT TYPE
- **P** Pin
- **S** Socket
- **N** No Insert Required

Cable Code Table: Use to Specify the Insert Arrangement

Cable Code	Insert Arrangement
38	09–35
39	09–98
40	11–05
41	11–35
42	11–99
43	13–04
44	13–35
45	13–98
46	15–05
47	15–18
48	15–35
49	15–97
50	17–06
51	17–08
52	17–26

Cable Code	Insert Arrangement
53	17–35
54	19–11
55	19–32
56	19–35
57	21–11
58	21–16
59	21–35
60	21–41
61	23–21
62	23–35
63	23–53
64	23–55
65	25–04
66	25–19
67	25–20

Cable Code	Insert Arrangement
68	25–24
69	25–29
70	25–35
71	25–61
92	11–98
93	15–19
94	13–08
95	17–99
96	21–39
97	25–43
98	15–23
99	17–19
100	15–26

ACT00 Lightweight Composite Tie-Style Strain Relief Adapters

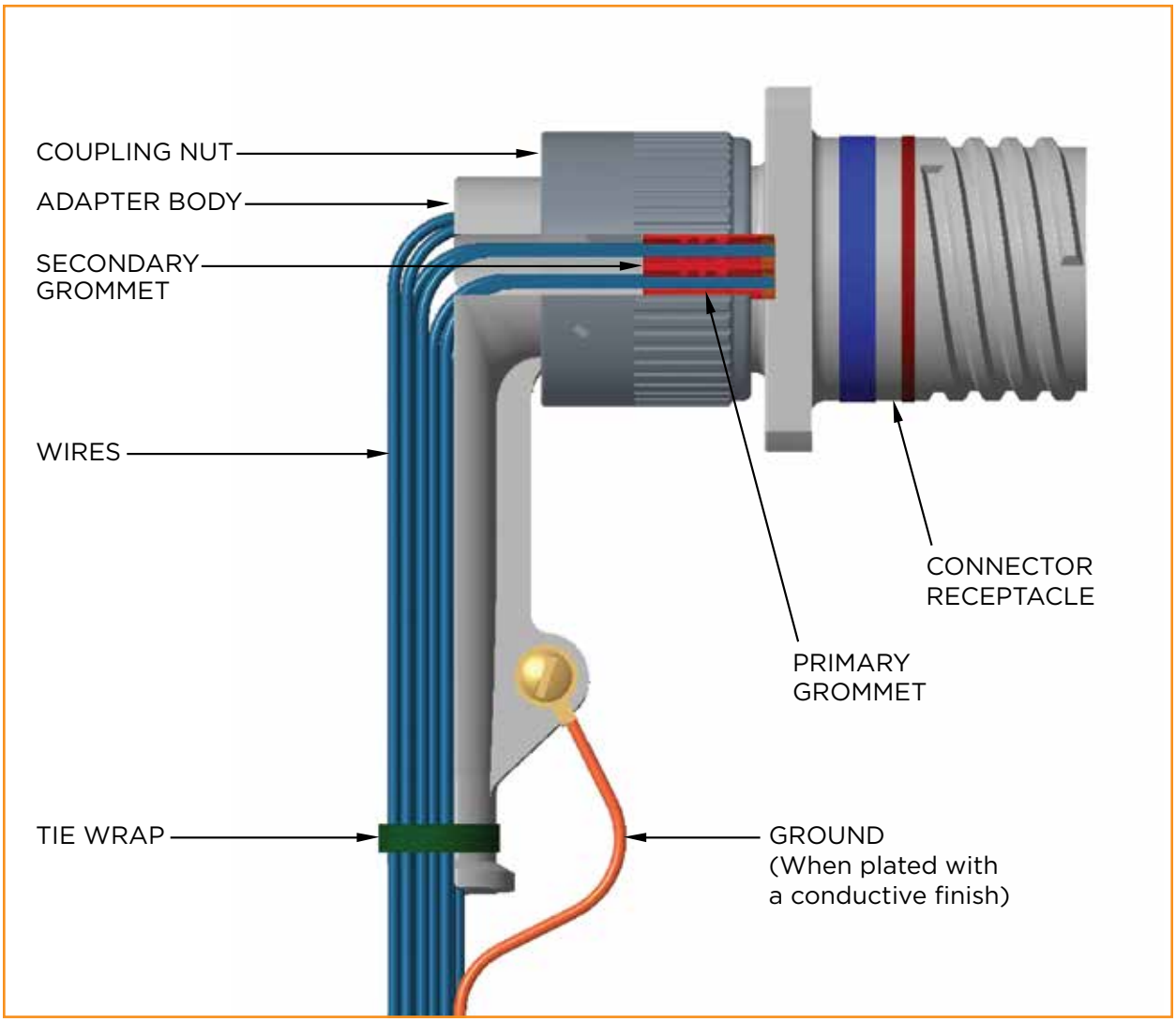

38999-Style Accessories

Metal Protective Covers

Series III
Plug Cap
(with attachment)

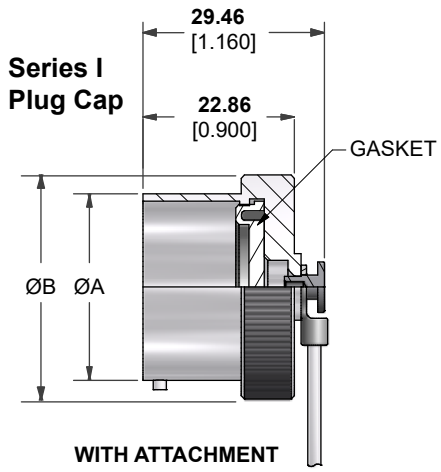

Shell Size	A Max.	B Max.
09	**14.56** 0.573	**20.83** 0.820
11	**17.81** 0.701	**23.88** 0.940
13	**21.62** 0.851	**27.18** 1.070
15	**24.84** 0.978	**30.23** 1.190
17	**28.02** 1.103	**33.53** 1.320
19	**30.73** 1.210	**36.58** 1.440
21	**33.91** 1.335	**39.88** 1.570
23	**37.08** 1.460	**42.92** 1.690
25	**40.26** 1.585	**46.23** 1.820

Millimeters Inches

Series I
Receptacle Cap
(with attachment)

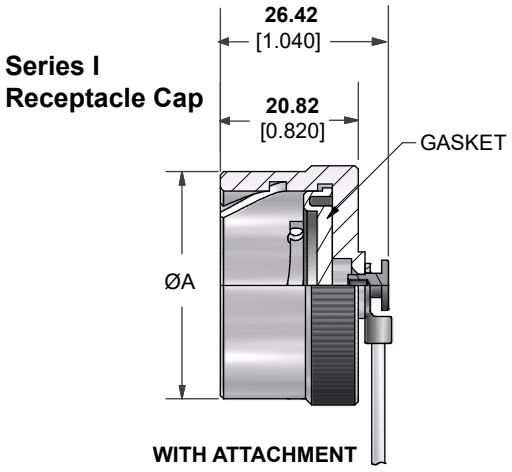

Shell Size	A Max.
09	**21.84** 0.860
11	**24.89** 0.980
13	**29.46** 1.160
15	**32.51** 1.280
17	**35.81** 1.410
19	**38.61** 1.520
21	**41.91** 1.650
23	**44.96** 1.770
25	**48.00** 1.890

Millimeters Inches

38999-Style Accessories

Metal Protective Covers

Series III
Plug Cap
(with attachment)

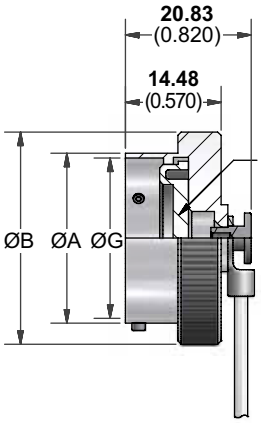

Shell Size	ØA +0.03/-0.13 (0.001/0.005)	ØB Max.	ØG Min.
08	**12.00** 0.472	**18.28** 0.720	**10.60** 0.417
10	**14.99** 0.590	**21.59** 0.850	**13.72** 0.540
12	**19.05** 0.750	**25.40** 1.000	**17.50** 0.689
14	**22.23** 0.875	**28.70** 1.130	**20.67** 0.814
16	**25.40** 1.000	**31.75** 1.250	**24.00** 0.945
18	**28.58** 1.125	**35.05** 1.380	**26.39** 1.039
20	**31.75** 1.250	**38.10** 1.500	**29.60** 1.165
22	**34.93** 1.375	**41.40** 1.630	**32.74** 1.289
24	**38.10** 1.500	**44.45** 1.750	**35.92** 1.414

Millimeters Inches

38999-Style Accessories

Metal Protective Covers

Series III
Plug Cap
(with attachment)

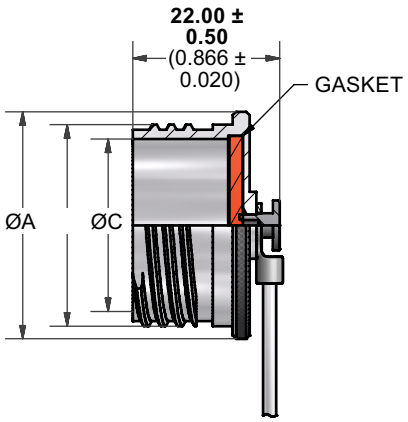

Shell Size	ØA Max.	ØC Min.
09	**21.0** 0.827	**12.6** 0.496
11	**24.5** 0.965	**15.8** 0.622
13	**28.0** 1.102	**19.4** 0.764
15	**30.0** 1.181	**22.6** 0.890
17	**34.0** 1.339	**25.8** 1.016
19	**37.0** 1.457	**28.6** 1.126
21	**40.0** 1.575	**31.8** 1.252
23	**43.0** 1.693	**34.8** 1.370
25	**47.0** 1.850	**38.1** 1.500

Millimeters Inches

Series III
Receptacle Cap
(with attachment)

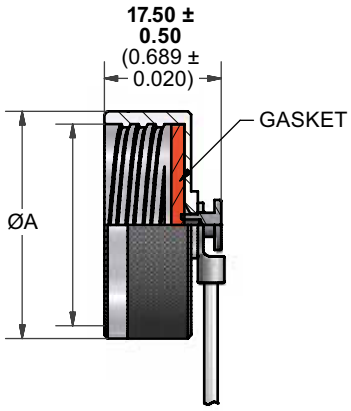

Shell Size	ØA Max.
09	**18.0** 0.709
11	**21.4** 0.843
13	**25.8** 1.016
15	**28.8** 1.134
17	**32.0** 1.260
19	**35.0** 1.378
21	**38.3** 1.508
23	**41.7** 1.642
25	**44.6** 1.756

Millimeters Inches

38999-Style Accessories

Metal Protective Covers

Series III
Anti-Decoupling Cap
(with attachment)

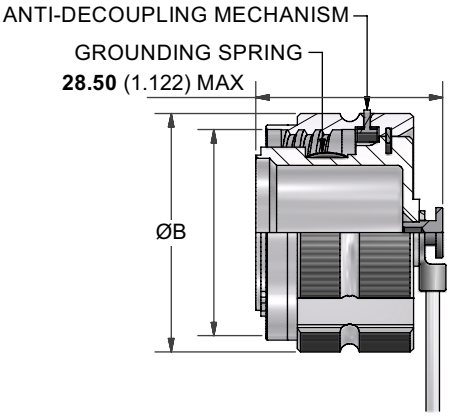

Shell Size	ØB Max.
09	**21.8** 0.858
11	**25.0** 0.984
13	**29.4** 1.157
15	**32.5** 1.280
17	**35.7** 1.406
19	**38.5** 1.516
21	**41.7** 1.642
23	**44.9** 1.768
25	**48.0** 1.890

Millimeters Inches

Series III
Anti-Tamper Cap
(with attachment)

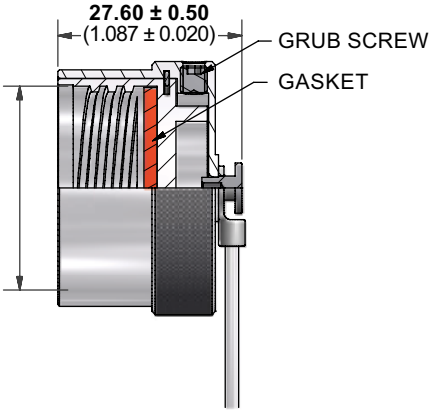

Shell Size	ØB Max.
09	**22.6** 0.890
11	**26.1** 1.028
13	**29.3** 1.154
15	**32.5** 1.280
17	**37.9** 1.492
19	**38.8** 1.528
21	**42.0** 1.654
23	**45.5** 1.791
25	**50.3** 1.980

Millimeters Inches

38999-Style Accessories

Metal Protective Covers

Series III
Arctic Grip Plug Cap
(with attachment)

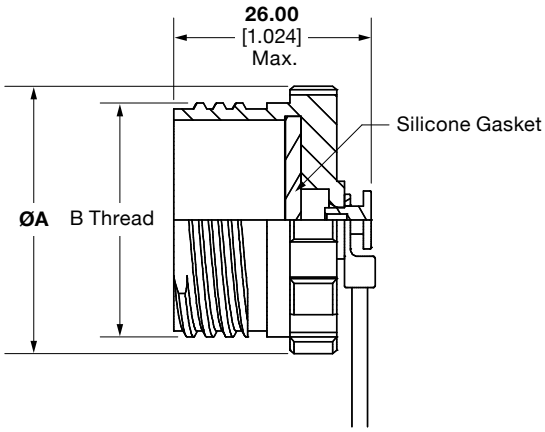

Shell Size	ØA Max.
09	**21.0** 0.827
11	**25.0** 0.984
13	**28.0** 1.102
15	**31.0** 1.220
17	**35.0** 1.378
19	**37.0** 1.457
21	**40.0** 1.575
23	**43.0** 1.693
25	**47.0** 1.850

Millimeters Inches

Series III
Arctic Grip Receptacle Cap
(with attachment)

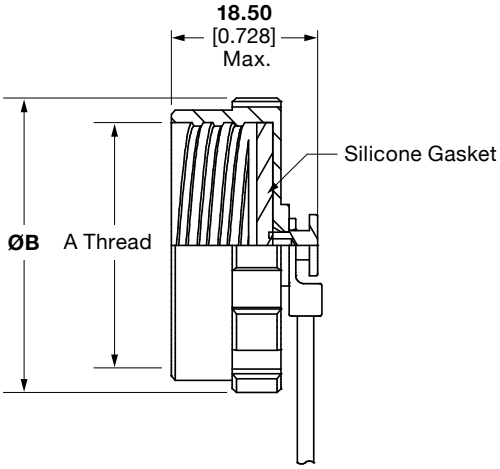

Shell Size	ØB Max.
09	**23.7** 0.933
11	**27.2** 1.071
13	**30.7** 1.209
15	**32.7** 1.287
17	**36.7** 1.445
19	**39.7** 1.563
21	**42.7** 1.681
23	**45.7** 1.799
25	**49.7** 1.957

Millimeters Inches

Metal Protective Covers for 38999 Series III

POLAMCO Protective Caps – Lanyard Options

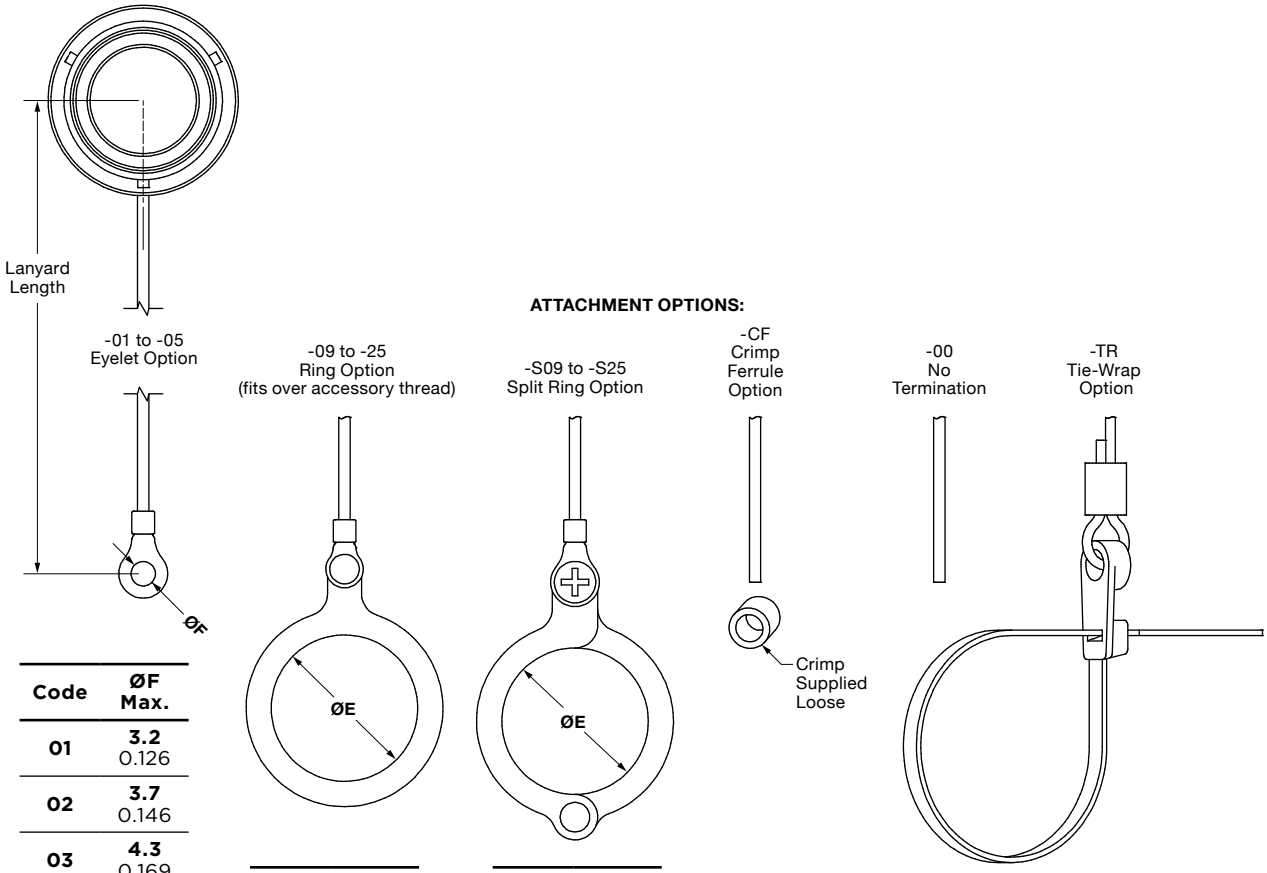

Code	ØF Max.
01	**3.2** 0.126
02	**3.7** 0.146
03	**4.3** 0.169
04	**5.3** 0.209
05	**6.4** 0.252

Millimeters Inches

Code	ØE Max.
09	**18.0** 0.709
11	**21.4** 0.843
13	**25.8** 1.016
15	**28.8** 1.134
17	**32.0** 1.260

Millimeters Inches

Code	ØE Max.
19	**35.0** 1.378
21	**38.3** 1.508
23	**41.7** 1.642
25	**44.6** 1.756

Millimeters Inches

RUGGED

- Helps protect connectors that are mated and unmated frequently
- Serves as an intermediary between plug and receptacle connector
- Available in MIL-DTL-38999 Series III and IV styles

VERSATILE

- One-piece connectors with plug and receptacle interfaces
- Choice of aluminum, stainless steel, or marine bronze shells
- Wide range of plating options

POLAMCO Connector Savers

38999-Style Series III and Series IV Connectors

POLAMCO Connector Savers help protect connectors that are mated and unmated frequently. The one-piece connectors use plug interface on one end and a receptacle interface on the other to allow them to serve as an intermediary between plug and receptacle connector. This helps allow the connector saver to take the wear and tear of repeated mating cycles. In particular, this helps allow box-mounted receptacles to be more protected from wear and the eventual need to be replaced.

POLAMCO connector savers are available in both MIL-DTL-38999 Series III and IV styles. Options include aluminum, stainless steel, or marine bronze shells with a wide range of plating options.

- **Shell Material:** Aluminum, stainless steel, or nickel aluminum bronze
- **Finish:** See part numbering description
- **Seals:** Silicone elastomer
- **Insert:** Thermoset plastic
- **Contacts:** Copper alloy, gold plated

POLAMCO Connector Savers

38999-Style Series III and Series IV Connectors

Series III Connector Saver

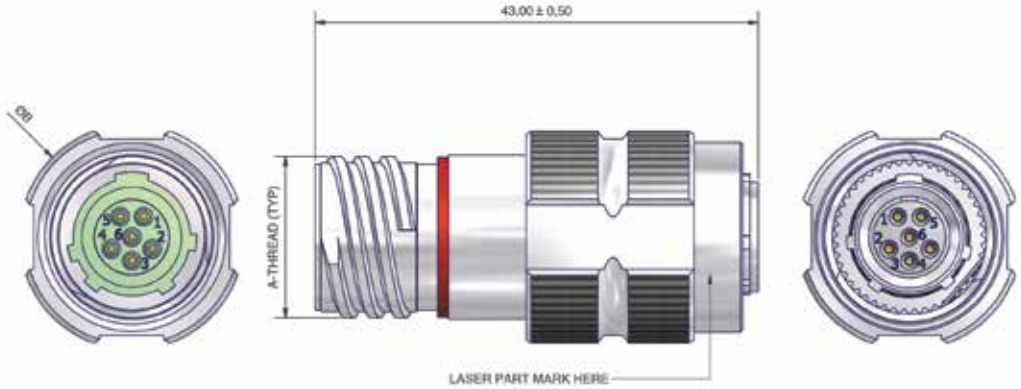

Series IV Connector Saver

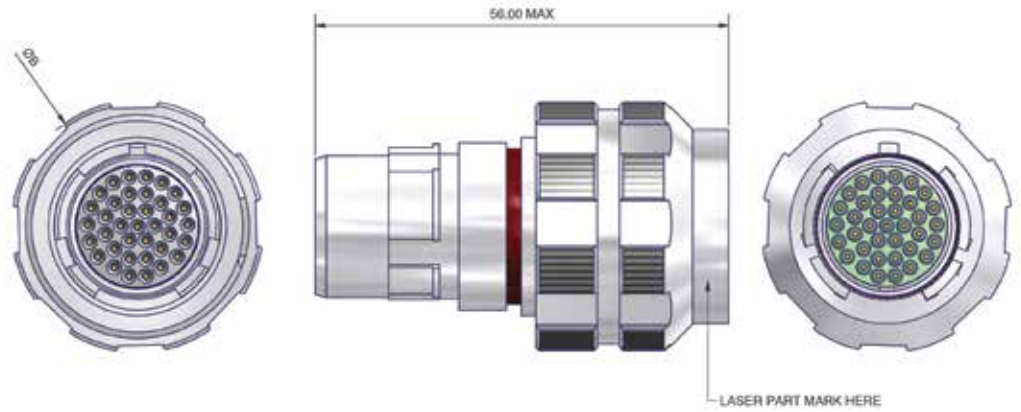

Shell Size	Ø B	
	Series III	Series IV
9	**21.8** 0.858	—
11	**25.0** 0.984	**26.6** 1.047
13	**29.4** 1.157	**31.0** 1.220
15	**32.5** 1.280	**34.2** 1.346
17	**35.7** 1.406	**37.4** 1.472
19	**38.5** 1.516	**40.2** 1.583
21	**41.7** 1.642	**43.3** 1.705
23	**44.9** 1.768	**46.5** 1.831
25	**48.0** 1.890	**49.7** 1.957

Millimeters Inches

POLAMCO Connector Savers

38999-Style Series III and Series IV Connectors

Part Numbering System

PC44CS - 15 35 - S N - 1-C

SERIES
- **PC43CS** Series III
- **PC44CS** Series IV

SHELL SIZE
- **9, 11, 13, 15, 17, 19, 21, 23, 25**

INSERT ARRANGEMENT

CONTACT RECEPTACLE END
- **P** Pin
- **S** Socket

KEYING
- **N, A, B, C, D, E**

MATERIAL/PLATING
- **1-C** Aluminum/Electroless Nickel
- **1-B** Aluminum/Cadmium Olive Drab over Electroless Nickel
- **1-ZB** Aluminum/Zinc Cobalt Olive Drab over Electroless Nickel
- **1-ZK** Aluminum/Zinc Cobalt Black over Electroless Nickel
- **1-ZN** Aluminum/Zinc Nickel Black Passivate Over Electroless Nickel
- **4-J** Stainless Steel/Passivate
- **2-Z** Nickel Aluminum Bronze/Shot Blast