TRIDONIC

## Module LLE 24mm 2000lm HV ADV5

Modules LLE advanced

LLE 24x280mm 2000lm HV ADV5

LLE 24x560mm 4000lm HV ADV5

For articles manufactured at Tridonic SRB d.o.o.

### Product description

- Ideal for linear and panel lights
- 2 terminals for serial wiring
- Perfectly uniform light, even if several LED modules are used together in a line
- Push terminals for quick and simple wiring of LED module to LED module
- Broad portfolio from extruded lenses and covers available
- HE ... High Efficiency, NM ... Nominal Mode, HO ... High Output
- Long lifetime up to 72,000 hours
- 5 years guarantee (conditions at https://www.tridonic.com/en/int/services/manufacturer-guarantee-conditions)

### Optical properties

- Colour temperatures 3,000, 4,000, 5,000 and 6,500 K
- Useful luminous flux 4,055 lm at Irated and tp = 25 °C
- Efficacy of the LED module 187 lm/W at Irated and tp = 25 °C
- High colour rendering index CRI > 80
- High colour consistency (MacAdam 3) ①
- Small luminous flux tolerances

### Mechanical properties

- Module dimension 24 x 280 mm and 24 x 560 mm (ZHAGA compliant)
- Simple installation via clips or screws

### System solution

- Combine Tridonic's LED modules and dimmable drivers to achieve an outstanding system efficacy (configuration possible via https://setbuilder.tridonic.com/)

① Integral measurement over the complete module.

### Website

http://www.tridonic.com/89603236

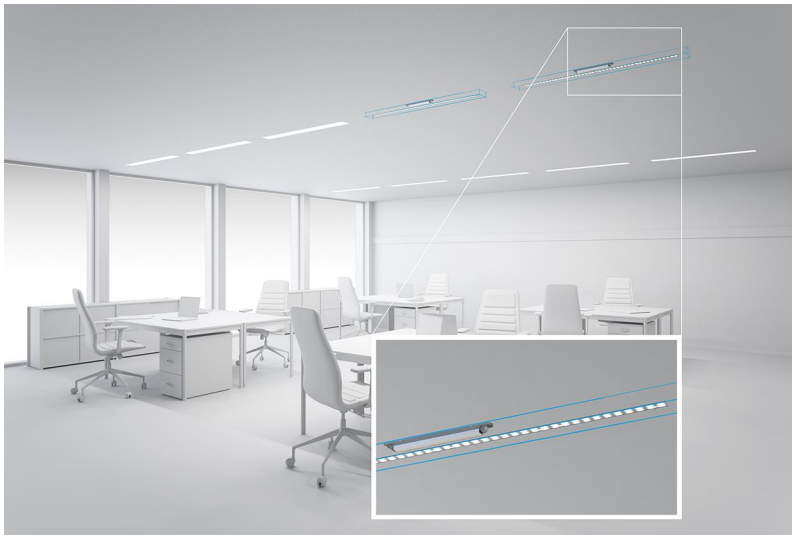

Linear | High bay | Decorative | Downlights | Spotlights | Free-standing | Area | Floor | Wall | Street

## Module LLE 24mm 2000lm HV ADV5

Modules LLE advanced

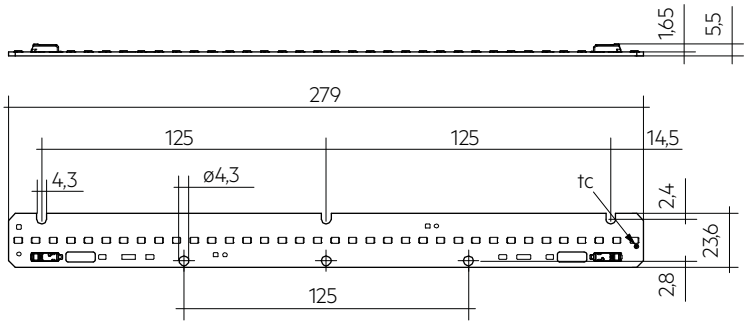


LLE 24x280mm 2000lm HV ADV5

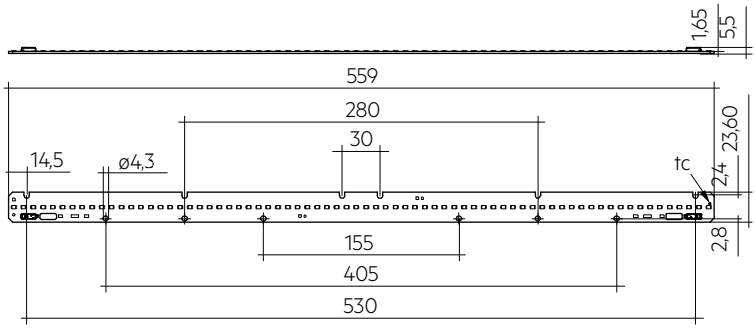


LLE 24x560mm 4000lm HV ADV5

### Ordering data

| Type | Article number | Colour temperature | Packaging, carton | Weight per pc. |
|---|---|---|---|---|
| **LLE 24x280mm 2000lm 830 HV ADV5** | **89603236** | 3,000 K | 108 pc(s). | 0.023 kg |
| **LLE 24x280mm 2000lm 840 HV ADV5** | **89603237** | 4,000 K | 108 pc(s). | 0.023 kg |
| **LLE 24x280mm 2000lm 850 HV ADV5** | **89603238** | 5,000 K | 108 pc(s). | 0.023 kg |
| **LLE 24x280mm 2000lm 865 HV ADV5** | **89603239** | 6,500 K | 108 pc(s). | 0.023 kg |
| **LLE 24x560mm 4000lm 830 HV ADV5** | **89603241** | 3,000 K | 108 pc(s). | 0.046 kg |
| **LLE 24x560mm 4000lm 840 HV ADV5** | **89603242** | 4,000 K | 108 pc(s). | 0.046 kg |
| **LLE 24x560mm 4000lm 850 HV ADV5** | **89603243** | 5,000 K | 108 pc(s). | 0.046 kg |
| **LLE 24x560mm 4000lm 865 HV ADV5** | **89603244** | 6,500 K | 108 pc(s). | 0.046 kg |

## Technical data

| | |
|---|---|
| Beam characteristic | 120° |
| Ambient temperature ta | -40 … +65 °C |
| tp rated | 65 °C |
| tc | 95 °C |
| Irated | 325 mA |
| Imax | 540 mA |
| Max. permissible LF current ripple | 595 mA |
| Max. permissible peak current | 900 mA / max. 10 ms |
| Max. working voltage for insulation ② | 320 V |
| Insulation test voltage | 1.64 kV |
| CTI of the printed circuit board | ≥ 600 |
| Colour tolerance | 3 SDCM |
| ESD classification | Severity level 4 |
| Risk group (IEC 62471) at ≤ 310 mA | RG0 |
| Risk group (IEC 62471) at Imax | RG1 |
| Classification acc. to IEC 62031 | Built-in |
| Type of protection | IP00 |
| Lumen maintenance L70B50 | 72,000 h |
| Guarantee (conditions at www.tridonic.com) | 5 Year(s) |

## Approval marks

RoHS

## Standards

IEC 62031, IEC 62471, IEC 61000-4-2, IEC 62778, IEC 61547, UL 8750

## Specific technical data

| Type | Article number | Photometric code | Useful luminous flux at tp = 25 °C③ | Expected luminous flux at tp rated④ | Typ. forward current | Min. forward voltage at tp rated⑤ | Max. forward voltage at tp = 25 °C⑤ | Power consumption Pon at tp = 25 °C⑥ | Efficacy of the module at tp = 25 °C | Expected efficacy of the module at tp rated | Colour rendering index CRI |
|---|---|---|---|---|---|---|---|---|---|---|---|
| **Operating mode HE at 200 mA** | | | | | | | | | | | |
| **LLE 24x280mm 2000lm 830 HV ADV5** | **89603236** | 830/359 | – | 1,188 lm | 200 mA | 30.9 V | 33.6 V | – | – | 184 lm/W | > >80 |
| **LLE 24x280mm 2000lm 840 HV ADV5** | **89603237** | 840/359 | – | 1,251 lm | 200 mA | 30.9 V | 33.6 V | – | – | 193 lm/W | > >80 |
| **LLE 24x280mm 2000lm 850 HV ADV5** | **89603238** | 850/359 | – | 1,250 lm | 200 mA | 30.9 V | 33.6 V | – | – | 193 lm/W | > >80 |
| **LLE 24x280mm 2000lm 865 HV ADV5** | **89603239** | 865/359 | – | 1,251 lm | 200 mA | 31.6 V | 33.6 V | – | – | 193 lm/W | > >80 |
| **LLE 24x560mm 4000lm 830 HV ADV5** | **89603241** | 830/359 | – | 2,391 lm | 200 mA | 61.8 V | 67.3 V | – | – | 187 lm/W | > >80 |
| **LLE 24x560mm 4000lm 840 HV ADV5** | **89603242** | 840/359 | – | 2,493 lm | 200 mA | 61.8 V | 67.3 V | – | – | 193 lm/W | > >80 |
| **LLE 24x560mm 4000lm 850 HV ADV5** | **89603243** | 850/359 | – | 2,501 lm | 200 mA | 61.8 V | 67.3 V | – | – | 193 lm/W | > >80 |
| **LLE 24x560mm 4000lm 865 HV ADV5** | **89603244** | 865/359 | – | 2,482 lm | 200 mA | 61.8 V | 67.3 V | – | – | 192 lm/W | > >80 |
| **Operating mode HE at 250 mA** | | | | | | | | | | | |
| **LLE 24x280mm 2000lm 830 HV ADV5** | **89603236** | 830/359 | – | 1,499 lm | 250 mA | 31.3 V | 34.0 V | – | – | 182 lm/W | > >80 |
| **LLE 24x280mm 2000lm 840 HV ADV5** | **89603237** | 840/359 | – | 1,561 lm | 250 mA | 31.3 V | 34.0 V | – | – | 191 lm/W | > >80 |
| **LLE 24x280mm 2000lm 850 HV ADV5** | **89603238** | 850/359 | – | 1,534 lm | 250 mA | 31.3 V | 34.0 V | – | – | 188 lm/W | > >80 |
| **LLE 24x280mm 2000lm 865 HV ADV5** | **89603239** | 865/359 | – | 1,561 lm | 250 mA | 31.3 V | 34.0 V | – | – | 190 lm/W | > >80 |
| **LLE 24x560mm 4000lm 830 HV ADV5** | **89603241** | 830/359 | – | 2,986 lm | 250 mA | 62.7 V | 67.9 V | – | – | 185 lm/W | > >80 |
| **LLE 24x560mm 4000lm 840 HV ADV5** | **89603242** | 840/359 | – | 3,124 lm | 250 mA | 62.7 V | 67.9 V | – | – | 191 lm/W | > >80 |
| **LLE 24x560mm 4000lm 850 HV ADV5** | **89603243** | 850/359 | – | 3,089 lm | 250 mA | 62.7 V | 67.9 V | – | – | 189 lm/W | > >80 |
| **LLE 24x560mm 4000lm 865 HV ADV5** | **89603244** | 865/359 | – | 3,098 lm | 250 mA | 62.7 V | 67.9 V | – | – | 189 lm/W | > >80 |
| **Operating mode HE at 275 mA** | | | | | | | | | | | |
| **LLE 24x280mm 2000lm 830 HV ADV5** | **89603236** | 830/359 | – | 1,616 lm | 275 mA | 31.5 V | 34.1 V | – | – | 177 lm/W | > >80 |
| **LLE 24x280mm 2000lm 840 HV ADV5** | **89603237** | 840/359 | – | 1,688 lm | 275 mA | 31.5 V | 34.1 V | – | – | 187 lm/W | > >80 |
| **LLE 24x280mm 2000lm 850 HV ADV5** | **89603238** | 850/359 | – | 1,667 lm | 275 mA | 31.5 V | 34.1 V | – | – | 184 lm/W | > >80 |
| **LLE 24x280mm 2000lm 865 HV ADV5** | **89603239** | 865/359 | – | 1,688 lm | 275 mA | 31.5 V | 34.1 V | – | – | 186 lm/W | > >80 |
| **LLE 24x560mm 4000lm 830 HV ADV5** | **89603241** | 830/359 | – | 3,230 lm | 275 mA | 63.0 V | 68.2 V | – | – | 180 lm/W | > >80 |
| **LLE 24x560mm 4000lm 840 HV ADV5** | **89603242** | 840/359 | – | 3,376 lm | 275 mA | 63.0 V | 68.2 V | – | – | 188 lm/W | > >80 |
| **LLE 24x560mm 4000lm 850 HV ADV5** | **89603243** | 850/359 | – | 3,335 lm | 275 mA | 63.0 V | 68.2 V | – | – | 184 lm/W | > >80 |
| **LLE 24x560mm 4000lm 865 HV ADV5** | **89603244** | 865/359 | – | 3,348 lm | 275 mA | 63.0 V | 68.2 V | – | – | 186 lm/W | > >80 |
| **Operating mode NM at 325 mA** | | | | | | | | | | | |
| **LLE 24x280mm 2000lm 830 HV ADV5** | **89603236** | 830/359 | 1,937 lm | 1,849 lm | 325 mA | 31.6 V | 34.4 V | 10.9 W | 178 lm/W | 172 lm/W | > >80 |
| **LLE 24x280mm 2000lm 840 HV ADV5** | **89603237** | 840/359 | 2,027 lm | 1,940 lm | 325 mA | 31.6 V | 34.4 V | 10.9 W | 186 lm/W | 181 lm/W | > >80 |
| **LLE 24x280mm 2000lm 850 HV ADV5** | **89603238** | 850/359 | 2,027 lm | 1,942 lm | 325 mA | 31.6 V | 34.4 V | 10.9 W | 186 lm/W | 180 lm/W | > >80 |
| **LLE 24x280mm 2000lm 865 HV ADV5** | **89603239** | 865/359 | 2,027 lm | 1,940 lm | 325 mA | 31.6 V | 34.4 V | 10.9 W | 186 lm/W | 180 lm/W | > >80 |
| **LLE 24x560mm 4000lm 830 HV ADV5** | **89603241** | 830/359 | 3,874 lm | 3,708 lm | 325 mA | 63.3 V | 68.8 V | 21.7 W | 181 lm/W | 175 lm/W | > >80 |
| **LLE 24x560mm 4000lm 840 HV ADV5** | **89603242** | 840/359 | 4,055 lm | 3,871 lm | 325 mA | 63.3 V | 68.8 V | 21.7 W | 187 lm/W | 181 lm/W | > >80 |
| **LLE 24x560mm 4000lm 850 HV ADV5** | **89603243** | 850/359 | 4,055 lm | 3,875 lm | 325 mA | 63.3 V | 68.8 V | 21.7 W | 187 lm/W | 180 lm/W | > >80 |
| **LLE 24x560mm 4000lm 865 HV ADV5** | **89603244** | 865/359 | 4,031 lm | 3,858 lm | 325 mA | 63.3 V | 68.8 V | 21.7 W | 186 lm/W | 179 lm/W | > >80 |
| **Operating mode HO at 350 mA** | | | | | | | | | | | |
| **LLE 24x280mm 2000lm 830 HV ADV5** | **89603236** | 830/359 | – | 2,025 lm | 350 mA | 31.9 V | 34.5 V | – | – | 172 lm/W | > >80 |
| **LLE 24x280mm 2000lm 840 HV ADV5** | **89603237** | 840/359 | – | 2,114 lm | 350 mA | 31.9 V | 34.5 V | – | – | 182 lm/W | > >80 |
| **LLE 24x280mm 2000lm 850 HV ADV5** | **89603238** | 850/359 | – | 2,084 lm | 350 mA | 31.9 V | 34.5 V | – | – | 179 lm/W | > >80 |
| **LLE 24x280mm 2000lm 865 HV ADV5** | **89603239** | 865/359 | – | 2,114 lm | 350 mA | 31.9 V | 34.5 V | – | – | 181 lm/W | > >80 |
| **LLE 24x560mm 4000lm 830 HV ADV5** | **89603241** | 830/359 | – | 4,050 lm | 350 mA | 63.8 V | 69.1 V | – | – | 175 lm/W | > >80 |
| **LLE 24x560mm 4000lm 840 HV ADV5** | **89603242** | 840/359 | – | 4,239 lm | 350 mA | 63.8 V | 69.1 V | – | – | 182 lm/W | > >80 |
| **LLE 24x560mm 4000lm 850 HV ADV5** | **89603243** | 850/359 | – | 4,178 lm | 350 mA | 63.8 V | 69.1 V | – | – | 179 lm/W | > >80 |
| **LLE 24x560mm 4000lm 865 HV ADV5** | **89603244** | 865/359 | – | 4,204 lm | 350 mA | 63.8 V | 69.1 V | – | – | 180 lm/W | > >80 |
| **Operating mode HO at 400 mA** | | | | | | | | | | | |
| **LLE 24x280mm 2000lm 830 HV ADV5** | **89603236** | 830/359 | – | 2,317 lm | 400 mA | 32.2 V | 34.8 V | – | – | 172 lm/W | > >80 |
| **LLE 24x280mm 2000lm 840 HV ADV5** | **89603237** | 840/359 | – | 2,425 lm | 400 mA | 32.2 V | 34.8 V | – | – | 173 lm/W | > >80 |
| **LLE 24x280mm 2000lm 850 HV ADV5** | **89603238** | 850/359 | – | 2,396 lm | 400 mA | 32.2 V | 34.8 V | – | – | 170 lm/W | > >80 |
| **LLE 24x280mm 2000lm 865 HV ADV5** | **89603239** | 865/359 | – | 2,425 lm | 400 mA | 32.2 V | 34.8 V | – | – | 172 lm/W | > >80 |
| **LLE 24x560mm 4000lm 830 HV ADV5** | **89603241** | 830/359 | – | 4,655 lm | 400 mA | 64.4 V | 69.6 V | – | – | 175 lm/W | > >80 |
| **LLE 24x560mm 4000lm 840 HV ADV5** | **89603242** | 840/359 | – | 4,860 lm | 400 mA | 64.4 V | 69.6 V | – | – | 181 lm/W | > >80 |
| **LLE 24x560mm 4000lm 850 HV ADV5** | **89603243** | 850/359 | – | 4,785 lm | 400 mA | 64.4 V | 69.6 V | – | – | 178 lm/W | > >80 |
| **LLE 24x560mm 4000lm 865 HV ADV5** | **89603244** | 865/359 | – | 4,820 lm | 400 mA | 64.4 V | 69.6 V | – | – | 179 lm/W | > >80 |
| **Operating mode HO at 500 mA** | | | | | | | | | | | |
| **LLE 24x280mm 2000lm 830 HV ADV5** | **89603236** | 830/359 | – | 2,764 lm | 500 mA | 32.5 V | 35.3 V | – | – | 163 lm/W | > >80 |
| **LLE 24x280mm 2000lm 840 HV ADV5** | **89603237** | 840/359 | – | 2,900 lm | 500 mA | 32.5 V | 35.3 V | – | – | 171 lm/W | > >80 |
| **LLE 24x280mm 2000lm 850 HV ADV5** | **89603238** | 850/359 | – | 2,898 lm | 500 mA | 32.5 V | 35.3 V | – | – | 170 lm/W | > >80 |
| **LLE 24x280mm 2000lm 865 HV ADV5** | **89603239** | 865/359 | – | 2,910 lm | 500 mA | 32.5 V | 35.3 V | – | – | 170 lm/W | > >80 |
| **LLE 24x560mm 4000lm 830 HV ADV5** | **89603241** | 830/359 | – | 5,543 lm | 500 mA | 65.1 V | 70.6 V | – | – | 165 lm/W | > >80 |
| **LLE 24x560mm 4000lm 840 HV ADV5** | **89603242** | 840/359 | – | 5,791 lm | 500 mA | 65.1 V | 70.6 V | – | – | 171 lm/W | > >80 |
| **LLE 24x560mm 4000lm 850 HV ADV5** | **89603243** | 850/359 | – | 5,798 lm | 500 mA | 65.1 V | 70.6 V | – | – | 171 lm/W | > >80 |
| **LLE 24x560mm 4000lm 865 HV ADV5** | **89603244** | 865/359 | – | 5,763 lm | 500 mA | 65.1 V | 70.6 V | – | – | 169 lm/W | > >80 |

② If mounted with M4 screws and plastic washers.
③ Tolerance of useful light flux - 0 % / + 15 %. Measurement uncertainty ± 10 %.
④ Tolerance of expected light flux - 0 % / + 15 %. Measurement uncertainty ± 10 %. Based on calculation.
⑤ Measurement tolerance forward voltage: ±0.1 V.
⑥ Tolerance of power consumption Pon ± 10 %. Measurement uncertainty ± 5 %.

## LINEAR COVER LLE

Accessory



**Product description**

_ LINEAR COVER for LLE
_ Protection against direct touch for non-SELV applications (recommendation LLE 20: use all fixing points and screwed Endcap, recommendation LLE 24: use all fixing points)
_ Fast snap on mounting on to LLE 20: with M4 screws and plastic washers, to LLE 24: with clips or plastic washers
_ High transmission: transparent, semi-transparent and diffuse
_ Material: PMMA
_ Tolerances: ± 1 mm for 597 mm length (ends finished), + 10 mm from length 1,150 mm (ends raw)

**Website**
http://www.tridonic.com/28000338

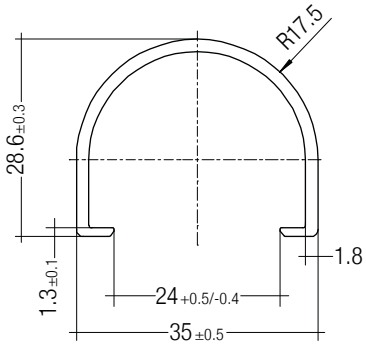


**Ordering data**

| Type | Article number | Colour | Length L | Efficiency | Packaging, carton | Weight per pc. |
|---|---|---|---|---|---|---|
| **LINEAR COVER SY Transparent 1600mm** | **28000338** | Transparent | 1,600 mm | 94 % | 12 pc(s). | 0.272 kg |
| **LINEAR COVER SY Frosted 1800mm** | **28000437** | Semi-transparent | 1,800 mm | 87 % | 12 pc(s). | 0.308 kg |
| **LINEAR COVER SY Frosted 1600mm** | **28000339** | Semi-transparent | 1,600 mm | 87 % | 12 pc(s). | 0.272 kg |
| **LINEAR COVER SY Frosted 1500mm** | **28000435** | Semi-transparent | 1,500 mm | 87 % | 12 pc(s). | 0.244 kg |
| **LINEAR COVER SY Frosted 1200mm** | **28000422** | Semi-transparent | 1,200 mm | 87 % | 12 pc(s). | 0.205 kg |
| **LINEAR COVER SY Frosted 597mm** | **28000340** | Semi-transparent | 597 mm | 87 % | 12 pc(s). | 0.102 kg |
| **LINEAR COVER SY Diffuse 1800mm** | **28000438** | Diffuse | 1,800 mm | 76 % | 12 pc(s). | 0.308 kg |
| **LINEAR COVER SY Diffuse 1600mm** | **28000341** | Diffuse | 1,600 mm | 76 % | 12 pc(s). | 0.272 kg |
| **LINEAR COVER SY Diffuse 1500mm** | **28000436** | Diffuse | 1,500 mm | 76 % | 12 pc(s). | 0.257 kg |
| **LINEAR COVER SY Diffuse 1200mm** | **28000434** | Diffuse | 1,200 mm | 76 % | 12 pc(s). | 0.205 kg |
| **LINEAR COVER SY Diffuse 597mm** | **28000342** | Diffuse | 597 mm | 76 % | 12 pc(s). | 0.102 kg |

## ACL ENDCAP LLE

Accessory

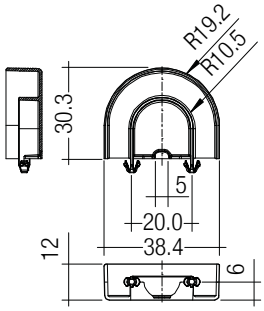


**Product description**

- ENDCAP for LLE
- PUSH-FIX: Fast snap on mounting (sheet thickness 0.5 – 1.0 mm), for drilling hole 4 mm
- SCREW-FIX: Screw mounting with EJOT Delta PT WN 5451 30x8 (not included), tightening torque 0.7 Nm
- Clip made of polycarbonate

**Website**
http://www.tridonic.com/28001037

**Ordering data**

| Type | Article number | Colour | Packaging, carton | Weight per pc. |
|---|---|---|---|---|
| **ACL ENDCAP LLE24 PUSH-FIX** | **28001037** | White | 480 pc(s). | 0.003 kg |
| **ACL ENDCAP LLE24 SCREW-FIX** | **28002315** | White | 480 pc(s). | 0.003 kg |

## ACL LINEAR LENS 24mm

Accessory

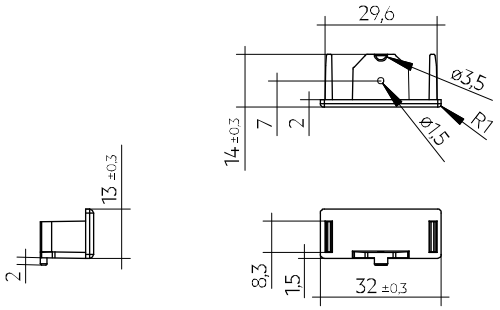


**Product description LINEAR LENS**

_ Linear lens for LLE 20 / 24
_ Available with different beam characteristics
_ Protection against direct touch for non-SELV applications (recommendation: use all fixing points)
_ Fast snap on mounting on to LLE 20: with M4 screws and plastic washers, to LLE 24: with clips or plastic washers
_ Recommendation: Fastening with screws and plastic washers, see 2.3 Heat sink specifications in data sheet
_ Material: PMMA
_ Available lengths: 1,200, 1,500 and 1,800 mm, Tolerance: + 10 mm (ends raw)
_ Max. permissible temperature 80 °C
_ Photometric data available on website

**Product description Endcap**

_ ENDCAP for LINEAR LENS 24mm INTENSE, ASY and DASY
_ Mounting by clipping in and screwing from below using screw EJOT Delta PT WN 5451 20x4, tightening torque 0.7 Nm
_ Made of Polyamide UL94 V0

**Website**
http://www.tridonic.com/28001428

**Ordering data**

| Type | Article number | Length L | Beam characteristic | Efficiency | Packaging, carton | Weight per pc. |
|---|---|---|---|---|---|---|
| **ACL LINEAR LENS 24x1200mm 60°** | **28001428** | 1,200 mm | 60° | 97 % | 21 pc(s). | 0.196 kg |
| **ACL LINEAR LENS 24x1200mm 90°** | **28001429** | 1,200 mm | 90° | 97 % | 21 pc(s). | 0.165 kg |
| **ACL LINEAR LENS 24x1500mm 60°** | **28000953** | 1,500 mm | 60° | 97 % | 21 pc(s). | 0.261 kg |
| **ACL LINEAR LENS 24x1500mm 90°** | **28000955** | 1,500 mm | 90° | 97 % | 21 pc(s). | 0.221 kg |
| **ACL LINEAR LENS 24x1200mm INTENSE** | **28002024** | 1,200 mm | 40° | 95 % | 18 pc(s). | 0.261 kg |
| **ACL LINEAR LENS 24x1500mm INTENSE** | **28002025** | 1,500 mm | 40° | 95 % | 18 pc(s). | 0.326 kg |
| **ACL LINEAR LENS 24x1800mm INTENSE** | **28002026** | 1,800 mm | 40° | 95 % | 18 pc(s). | 0.392 kg |
| **ACL LINEAR LENS 24x1200mm BATWING** | **28002027** | 1,200 mm | batwing | 95 % | 18 pc(s). | 0.275 kg |
| **ACL LINEAR LENS 24x1500mm BATWING** | **28002028** | 1,500 mm | batwing | 95 % | 18 pc(s). | 0.344 kg |
| **ACL LINEAR LENS 24x1800mm BATWING** | **28002029** | 1,800 mm | batwing | 95 % | 18 pc(s). | 0.412 kg |
| **ACL LINEAR LENS 24x1200mm ASY** | **28002030** | 1,200 mm | asymmetric | 95 % | 18 pc(s). | 0.250 kg |
| **ACL LINEAR LENS 24x1500mm ASY** | **28002031** | 1,500 mm | asymmetric | 95 % | 18 pc(s). | 0.312 kg |
| **ACL LINEAR LENS 24x1800mm ASY** | **28002032** | 1,800 mm | asymmetric | 95 % | 18 pc(s). | 0.375 kg |
| **ACL LINEAR LENS 24x1200mm DASY** | **28002033** | 1,200 mm | double asymmetric | 92 % | 18 pc(s). | 0.249 kg |
| **ACL LINEAR LENS 24x1500mm DASY** | **28002034** | 1,500 mm | double asymmetric | 92 % | 18 pc(s). | 0.311 kg |
| **ACL LINEAR LENS 24x1800mm DASY** | **28002035** | 1,800 mm | double asymmetric | 92 % | 18 pc(s). | 0.373 kg |
| **ACL Endcap LENS 24mm PSF** | **28002669** | – | – | – | 3,600 pc(s). | 0.003 kg |

## ACL CLIP 4.3mm

Accessory

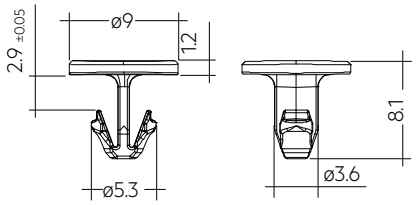


**Product description**

- Clip for fixation of LED modules with 4.3 mm holes
- Fast snap on mounting (sheet thickness 0.5 – 1.0 mm for PUSH-FIX and 1 – 2 mm for PUSH-FIX Long)
- For drilling hole 4 mm
- Clip made of polycarbonate
- Minimum sales quantity 500 pcs.

**Website**
http://www.tridonic.com/28001036

**Ordering data**

| Type | Article number | Colour | Packaging, bag ① | Weight per pc. |
|---|---|---|---|---|
| **ACL CLIP 4.3mm PUSH-FIX** | **28001036** | White | 500 pc(s). | 0.001 kg |
| **ACL CLIP 4,3mm PUSH-FIX Long** | **28002314** | Transparent | 500 pc(s). | 0.001 kg |

① Minimum sales quantity 500 pcs.

## ACL BRIDGE LLE24/40

Accessory

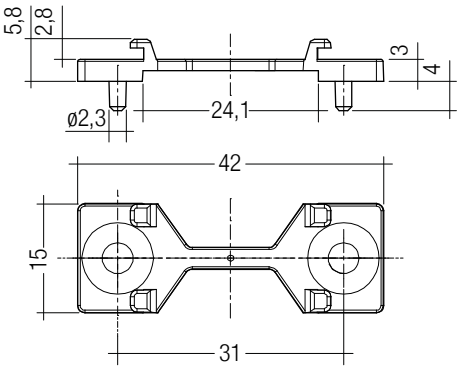


### Product description

- Enables the fixation of 24 mm wide Tridonic LED modules to fixtures made for 40 mm wide modules
- Ideal for extruded aluminium gear trays made for 40 mm modules with pre-alignment knobs
- Clip-on for LINEAR COVER and LINEAR LENS ①
- For LLE 24 with 280 mm module minimum 2 bridges required
- For LLE 24 with 560 mm module minimum 3 bridges required
- Fixation via M3 or M4 countersunk screw, max. tightening torque 0.5 Nm
- Material: white polycarbonate
- Minimum sales quantity 600 pcs.

① Beam characteristics will change due to the elevated fixation (see photometric files for details).

### Website

http://www.tridonic.com/28001205

### Ordering data

| Type | Article number | Colour | Packaging, carton | Weight per pc. |
|---|---|---|---|---|
| **ACL BRIDGE LLE24/40 SCREW-FIX** | **28001205** | White | 600 pc(s). | 0.001 kg |

## 1. Standards

IEC 62031
IEC 62471
IEC 61000-4-2
IEC 62778
IEC 61547
UL 8750 (for CLASS2 circuits and dry locations)

### 1.1 Photometric code

Key for photometric code, e. g. 830 / 349

| 1st digit | | 2nd + 3rd digit | 4th digit | 5th digit | 6th digit | |
|---|---|---|---|---|---|---|
| Code | CRI | Colour temperature in Kelvin x 100 | MacAdam initial | MacAdam after 25% of the lifetime (max.6000h) | Luminous flux after 25% of the lifetime (max.6000h) | |
| | | | | | Code | Luminous flux |
| 7 | 70 – 79 | | | | 7 | ≥ 70 % |
| 8 | 80 – 89 | | | | 8 | ≥ 80 % |
| 9 | ≥90 | | | | 9 | ≥ 90 % |

### 1.2 Energy classification

| Type | Colour tempera-ture | Forward current | Energy classifi-cation | Energy consumption |
|---|---|---|---|---|
| LLE 24x280mm 2000lm 830 HV ADV5 | 3.000 K | 325 mA | C | 11 kWh / 1.000 h |
| LLE 24x280mm 2000lm 840 HV ADV5 | 4.000 K | 325 mA | C | 11 kWh / 1.000 h |
| LLE 24x280mm 2000lm 850 HV ADV5 | 5.000 K | 325 mA | C | 11 kWh / 1.000 h |
| LLE 24x280mm 2000lm 865 HV ADV5 | 6.500 K | 325 mA | C | 11 kWh / 1.000 h |
| LLE 24x560mm 4000lm 830 HV ADV5 | 3.000 K | 325 mA | C | 22 kWh / 1.000 h |
| LLE 24x560mm 4000lm 840 HV ADV5 | 4.000 K | 325 mA | C | 22 kWh / 1.000 h |
| LLE 24x560mm 4000lm 850 HV ADV5 | 5.000 K | 325 mA | C | 22 kWh / 1.000 h |
| LLE 24x560mm 4000lm 865 HV ADV5 | 6.500 K | 325 mA | C | 22 kWh / 1.000 h |

Energy label and further information at www.tridonic.com in the certificates tab of the corresponding product page and at the EPREL data base https://eprel.ec.europa.eu/

## 2. Thermal details

### 2.1 tc point, ambient temperature and lifetime

The temperature at tp reference point is crucial for the light output and lifetime of a LED product.

For LLE a tp temperature of 65 °C has to be complied in order to achieve an optimum between heat sink requirements, light output and lifetime.

Compliance with the maximum permissible reference temperature at the tc point must be checked under operating conditions in a thermally stable state. The maximum value must be determined under worst-case conditions for the relevant application.

The tc and tp temperature of LED modules from Tridonic are measured at the same reference point.

### 2.2 Storage and humidity

| | |
|---|---|
| Storage temperature | -40 ... +80 °C |

Operation only in non condensing environment.
Humidity during processing of the module should be between 30 to 70 %.

### 2.3 Thermal design and heat sink

The rated life of LED products depends to a large extent on the temperature. If the permissible temperature limits are exceeded, the life of the LLE will be greatly reduced or the LLE may be destroyed.

### 2.4 Heat sink values

**LLE 24x280mm 2000lm ADV5**

| ta | tp | Forward current | $R_{th, hs-a}$ | Cooling area |
|---|---|---|---|---|
| 25 °C | 65 °C | 325 mA | 7.87 K/W | 85 cm² |
| 25 °C | 65 °C | 500 mA | 4.58 K/W | 146 cm² |
| 35 °C | 65 °C | 325 mA | 5.90 K/W | 113 cm² |
| 35 °C | 65 °C | 500 mA | 3.43 K/W | 194 cm² |
| 45 °C | 65 °C | 325 mA | 3.93 K/W | 170 cm² |
| 45 °C | 65 °C | 500 mA | 2.29 K/W | 292 cm² |
| 55 °C | 65 °C | 325 mA | 1.96 K/W | 340 cm² |
| 55 °C | 65 °C | 500 mA | 1.14 K/W | 585 cm² |

**LLE 24x560mm 4000lm ADV5**

| ta | tp | Forward current | $R_{th, hs-a}$ | Cooling area |
|---|---|---|---|---|
| 25 °C | 65 °C | 325 mA | 3.93 K/W | 170 cm² |
| 25 °C | 65 °C | 500 mA | 2.29 K/W | 291 cm² |
| 35 °C | 65 °C | 325 mA | 2.95 K/W | 226 cm² |
| 35 °C | 65 °C | 500 mA | 1.72 K/W | 388 cm² |
| 45 °C | 65 °C | 325 mA | 1.96 K/W | 339 cm² |
| 45 °C | 65 °C | 500 mA | 1.14 K/W | 583 cm² |
| 55 °C | 65 °C | 325 mA | 0.98 K/W | 680 cm² |
| 55 °C | 65 °C | 500 mA | 0.57 K/W | 1,169 cm² |

**Notes**
The actual cooling surface can differ because of the material, the structural shape, outside influences and the installation situation. Depending on the heat sink a heat conducting paste or heat conducting film might be necessary to keep the specified tp temperature.

## 3. Installation / wiring

### 3.1 Electrical supply/choice of LED driver

LLE modules from Tridonic are not protected against overvoltages, overcurrents, overloads or short-circuit currents. Safe and reliable operation can only be guaranteed in conjunction with a LED driver which complies with the relevant standards. The use of LED driver from Tridonic in combination with LLE modules guarantees the necessary protection for safe and reliable operation.

If a LED driver other than Tridonic is used, it must provide the following protection:
- Short-circuit protection
- Overload protection
- Overtemperature protection

LLE modules must be supplied by a constant current LED driver. Operation with a constant voltage LED driver will lead to an irreversible damage of the module.

Wrong polarity can damage the LLE.

The LLE module is designed for serial wiring.

With parallel wiring tolerance-related differences in output are possible (thermal stress of the module) and can cause differences in brightness.

If a wire breaks or a complete module fails then the current passing through the other module increases. This may reduce its life considerably.

Max. 8 pieces 280 mm modules or 4 pieces 560 mm modules may be connected in parallel.

LLE can be operated either from SELV LED drivers or from LED drivers with LV output voltage.

LLE are basic insulated up to 320 V (if mounted with M4 screws with head diameter 7 mm in combination with plastic washers) against ground and can be mounted directly on earthed metal parts of the luminaire. If the max. output voltage of the LED driver (also against earth) is above 320 V, an additional insulation between LED module and heat sink is required (for example by insulated thermal pads) or by a suitable luminaire construction.
At voltages > 60 V an additional protection against direct touch (test finger) to the light emitting side of the module has to be guaranteed. This is typically achieved by means of a non removable light distributor over the module.

### 3.2 Wiring

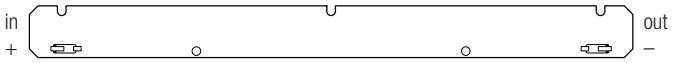


**Wiring examples**

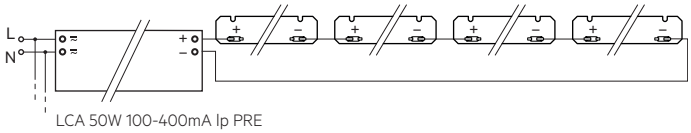


### 3.3 Wiring type and cross section

For wiring use stranded wire with ferrules or solid wire from 0.2 to 0.75 mm².
For the push-wire connection you have to strip the insulation (8–9 mm).

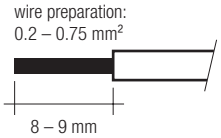


To remove the wires use a suitabel tool (e.g. Microcon release pin) or through twist and pull .

### 3.4 Mounting instruction

None of the components of the LLE (substrate, LED, electronic components etc.) may be exposed to tensile or compressive stresses.

Max. torque for fixing: 0.5 Nm.

The LED modules are mounted onto a heat sink with min. 3 screws per module or ACL CLIP 4.3mm.

Chemical substance may harm the LED module. Chemical reactions could lead to colour shift, reduced luminous flux or a total failure of the module caused by corrosion of electrical connections.

Materials which are used in LED applications (e.g. sealings, adhesives) must not produce dissolver gas. They must not be condensation curing based, acetate curing based or contain sulfur, chlorine or phthalate.
Avoid corrosive atmosphere during usage and storage.

### 3.5 EOS/ESD safety guidelines

The device / module contains components that are sensitive to electrostatic discharge and may only be installed in the factory and on site if appropriate EOS/ESD protection measures have been taken. No special measures need be taken for devices/modules with enclosed casings (contact with the pc board not possible), just normal installation practice. Please note the requirements set out in the document EOS / ESD guidelines (Guideline_EOS_ESD.pdf) at:
http://www.tridonic.com/esd-protection

## 4. Lifetime

### 4.1 Lifetime, lumen maintenance and failure rate

The light output of an LED module decreases over the lifetime, this is characterized with the L value.
L70 means that the LED module will give 70 % of its initial luminous flux.
This value is always related to the number of operation hours and therefore defines the lifetime of an LED module.

As the L value is a statistical value and the lumen maintenance may vary over the delivered LED modules.
The B value defines the amount of modules which are below the specific L value, e.g. L70B10 means 10 % of the LED modules are below 70 % of the initial luminous flux, respectively 90 % will be above 70 % of the initial value.
In addition the percentage of failed modules (fatal failure) is characterized by the C value.

The F value is the combination of the B and C value. That means for F degradation and complete failures are considered, e.g. L70F10 means 10 % of the LED modules may fail or be below 70 % of the initial luminous flux.

### 4.2 Lumen maintenance for LLE 24mm HV ADV5

| Forward current | tp temperature | L90 / F10 | L90 / F50 | L80 / F10 | L80 / F50 | L70 / F10 | L70 / F50 |
|---|---|---|---|---|---|---|---|
| 150 mA | 40 °C | 43,000 h | 59,000 h | >72,000 h | >72,000 h | >72,000 h | >72,000 h |
| | 45 °C | 42,000 h | 57,000 h | >72,000 h | >72,000 h | >72,000 h | >72,000 h |
| | 50 °C | 41,000 h | 55,000 h | >72,000 h | >72,000 h | >72,000 h | >72,000 h |
| | 55 °C | 40,000 h | 54,000 h | >72,000 h | >72,000 h | >72,000 h | >72,000 h |
| | 60 °C | 39,000 h | 52,000 h | >72,000 h | >72,000 h | >72,000 h | >72,000 h |
| | 65 °C | 38,000 h | 50,000 h | >72,000 h | >72,000 h | >72,000 h | >72,000 h |
| | 70 °C | 38,000 h | 49,000 h | >72,000 h | >72,000 h | >72,000 h | >72,000 h |
| | 75 °C | 37,000 h | 47,000 h | >72,000 h | >72,000 h | >72,000 h | >72,000 h |
| | 80 °C | 36,000 h | 46,000 h | >72,000 h | >72,000 h | >72,000 h | >72,000 h |
| | 85 °C | 35,000 h | 45,000 h | >72,000 h | >72,000 h | >72,000 h | >72,000 h |
| 200 mA | 40 °C | 43,000 h | 58,000 h | >72,000 h | >72,000 h | >72,000 h | >72,000 h |
| | 45 °C | 42,000 h | 57,000 h | >72,000 h | >72,000 h | >72,000 h | >72,000 h |
| | 50 °C | 41,000 h | 55,000 h | >72,000 h | >72,000 h | >72,000 h | >72,000 h |
| | 55 °C | 40,000 h | 53,000 h | >72,000 h | >72,000 h | >72,000 h | >72,000 h |
| | 60 °C | 39,000 h | 51,000 h | >72,000 h | >72,000 h | >72,000 h | >72,000 h |
| | 65 °C | 38,000 h | 50,000 h | >72,000 h | >72,000 h | >72,000 h | >72,000 h |
| | 70 °C | 37,000 h | 48,000 h | >72,000 h | >72,000 h | >72,000 h | >72,000 h |
| | 75 °C | 36,000 h | 47,000 h | >72,000 h | >72,000 h | >72,000 h | >72,000 h |
| | 80 °C | 36,000 h | 45,000 h | >72,000 h | >72,000 h | >72,000 h | >72,000 h |
| | 85 °C | 35,000 h | 44,000 h | >72,000 h | >72,000 h | >72,000 h | >72,000 h |
| 300 mA | 40 °C | 42,000 h | 58,000 h | >72,000 h | >72,000 h | >72,000 h | >72,000 h |
| | 45 °C | 41,000 h | 56,000 h | >72,000 h | >72,000 h | >72,000 h | >72,000 h |
| | 50 °C | 40,000 h | 54,000 h | >72,000 h | >72,000 h | >72,000 h | >72,000 h |
| | 55 °C | 40,000 h | 52,000 h | >72,000 h | >72,000 h | >72,000 h | >72,000 h |
| | 60 °C | 39,000 h | 51,000 h | >72,000 h | >72,000 h | >72,000 h | >72,000 h |
| | 65 °C | 38,000 h | 49,000 h | >72,000 h | >72,000 h | >72,000 h | >72,000 h |
| | 70 °C | 37,000 h | 48,000 h | >72,000 h | >72,000 h | >72,000 h | >72,000 h |
| | 75 °C | 36,000 h | 46,000 h | >72,000 h | >72,000 h | >72,000 h | >72,000 h |
| | 80 °C | 35,000 h | 45,000 h | >72,000 h | >72,000 h | >72,000 h | >72,000 h |
| | 85 °C | 34,000 h | 44,000 h | 70,000 h | >72,000 h | >72,000 h | >72,000 h |
| 375 mA | 40 °C | 42,000 h | 57,000 h | >72,000 h | >72,000 h | >72,000 h | >72,000 h |
| | 45 °C | 41,000 h | 55,000 h | >72,000 h | >72,000 h | >72,000 h | >72,000 h |
| | 50 °C | 40,000 h | 54,000 h | >72,000 h | >72,000 h | >72,000 h | >72,000 h |
| | 55 °C | 39,000 h | 52,000 h | >72,000 h | >72,000 h | >72,000 h | >72,000 h |
| | 60 °C | 38,000 h | 50,000 h | >72,000 h | >72,000 h | >72,000 h | >72,000 h |
| | 65 °C | 37,000 h | 49,000 h | >72,000 h | >72,000 h | >72,000 h | >72,000 h |
| | 70 °C | 37,000 h | 47,000 h | >72,000 h | >72,000 h | >72,000 h | >72,000 h |
| | 75 °C | 36,000 h | 46,000 h | >72,000 h | >72,000 h | >72,000 h | >72,000 h |
| | 80 °C | 35,000 h | 44,000 h | 71,000 h | >72,000 h | >72,000 h | >72,000 h |
| | 85 °C | 34,000 h | 43,000 h | 69,000 h | >72,000 h | >72,000 h | >72,000 h |
| 450 mA | 40 °C | 42,000 h | 56,000 h | >72,000 h | >72,000 h | >72,000 h | >72,000 h |
| | 45 °C | 41,000 h | 55,000 h | >72,000 h | >72,000 h | >72,000 h | >72,000 h |
| | 50 °C | 40,000 h | 53,000 h | >72,000 h | >72,000 h | >72,000 h | >72,000 h |
| | 55 °C | 39,000 h | 51,000 h | >72,000 h | >72,000 h | >72,000 h | >72,000 h |
| | 60 °C | 38,000 h | 50,000 h | >72,000 h | >72,000 h | >72,000 h | >72,000 h |
| | 65 °C | 37,000 h | 48,000 h | >72,000 h | >72,000 h | >72,000 h | >72,000 h |
| | 70 °C | 36,000 h | 47,000 h | >72,000 h | >72,000 h | >72,000 h | >72,000 h |
| | 75 °C | 35,000 h | 45,000 h | >72,000 h | >72,000 h | >72,000 h | >72,000 h |
| | 80 °C | 35,000 h | 44,000 h | 70,000 h | >72,000 h | >72,000 h | >72,000 h |
| | 85 °C | 34,000 h | 43,000 h | 69,000 h | >72,000 h | >72,000 h | >72,000 h |
| 500 mA | 40 °C | 41,000 h | 56,000 h | >72,000 h | >72,000 h | >72,000 h | >72,000 h |
| | 45 °C | 40,000 h | 54,000 h | >72,000 h | >72,000 h | >72,000 h | >72,000 h |
| | 50 °C | 39,000 h | 52,000 h | >72,000 h | >72,000 h | >72,000 h | >72,000 h |
| | 55 °C | 38,000 h | 51,000 h | >72,000 h | >72,000 h | >72,000 h | >72,000 h |
| | 60 °C | 38,000 h | 49,000 h | >72,000 h | >72,000 h | >72,000 h | >72,000 h |
| | 65 °C | 37,000 h | 48,000 h | >72,000 h | >72,000 h | >72,000 h | >72,000 h |
| | 70 °C | 36,000 h | 46,000 h | >72,000 h | >72,000 h | >72,000 h | >72,000 h |
| | 75 °C | 35,000 h | 45,000 h | 71,000 h | >72,000 h | >72,000 h | >72,000 h |
| | 80 °C | 34,000 h | 43,000 h | 70,000 h | >72,000 h | >72,000 h | >72,000 h |
| | 85 °C | 34,000 h | 42,000 h | 68,000 h | >72,000 h | >72,000 h | >72,000 h |

### 4.3 Switching capability

100,000 cycles

Tridonic test according to IEC 62717 Cl 10.3.3
30 s on / 30 s off at Imax

## 5. Electrical values

### 5.1 Declaration of electrical parameters

Irated ... Nominal operating current the module is designed for.

Imax ... Max. permissible continuous operating current incl. The tolerances of the LED driver.

Max. permissible LF current ripple ... Max. output current of the LED driver incl. Tolerances and LF current ripple must not exceed this value.

Max. permissible peak current ... The max. output peak current of the LED driver must not exceed this value.

### 5.2 Typ. forward voltage vs. forward current

**LLE 24x280mm 2000lm 8xx HV ADV5**

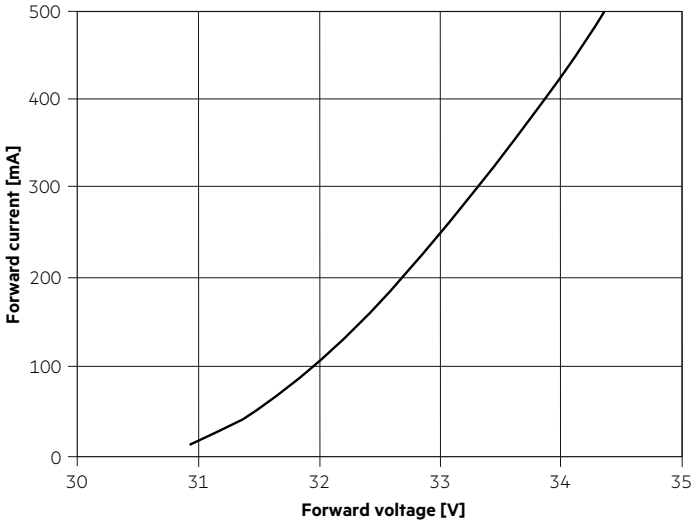


**LLE 24x560mm 4000lm 8xx HV ADV5**

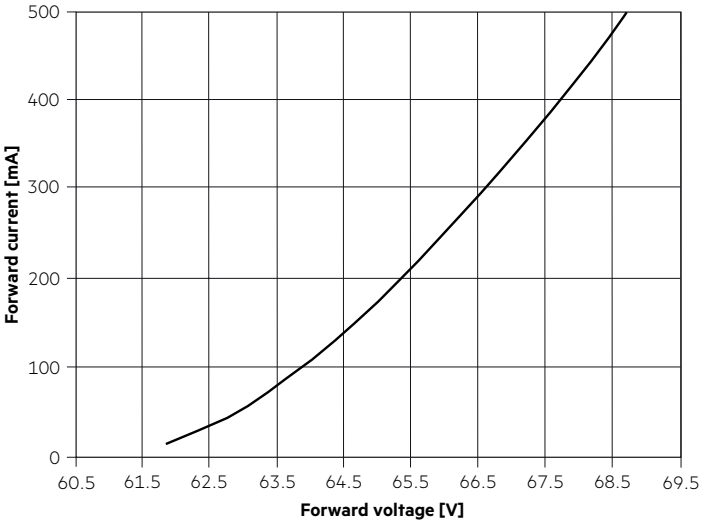


The diagrams are based on statistic values.
The real values can be different.

### 5.3 Forward voltage vs. tc temperature

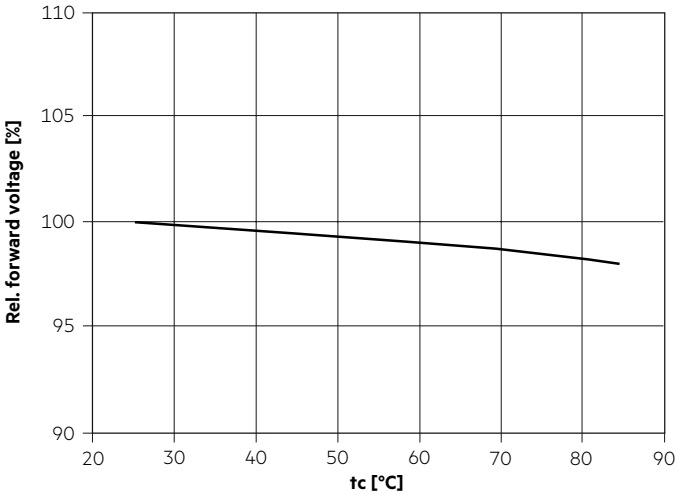


The diagrams are based on statistic values.
The real values can be different.

## 6. Photometric characteristics

### 6.1 Coordinates and tolerances according to CIE 1931

The specified colour coordinates are integral measured by current impulse of 195 mA and a duration of 100 ms.
The ambient temperature of the measurement is ta = 25 °C.
The measurement tolerance of the colour coordinates are ± 0.01.

**3,000 K**

| | x0 | y0 |
|---|---|---|
| Centre | 0.4338 | 0.4030 |

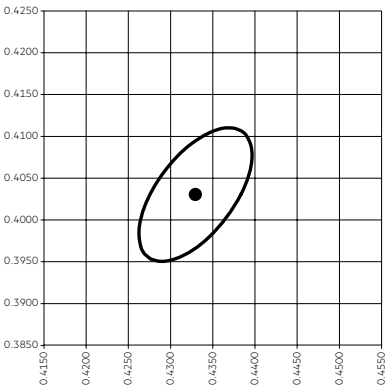


MacAdam Ellipse: 3SDCM

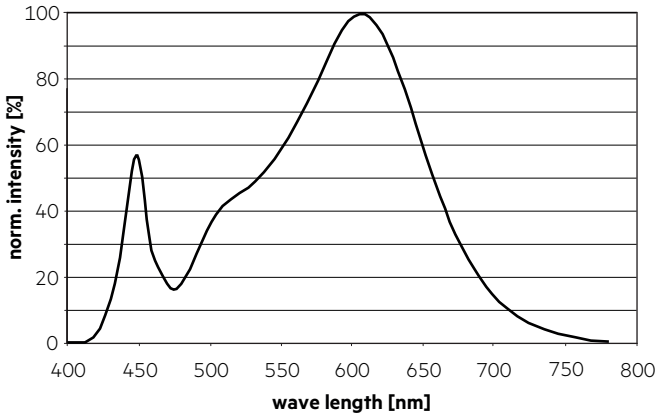


**4,000 K**

| | x0 | y0 |
|---|---|---|
| Center | 0.3818 | 0.3797 |

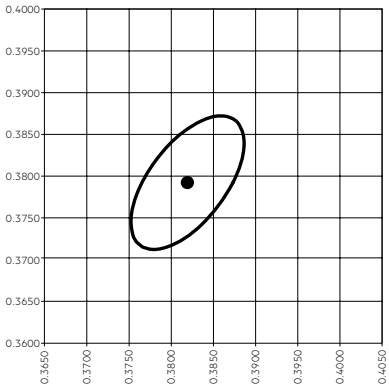


MacAdam Ellipse: 3SDCM

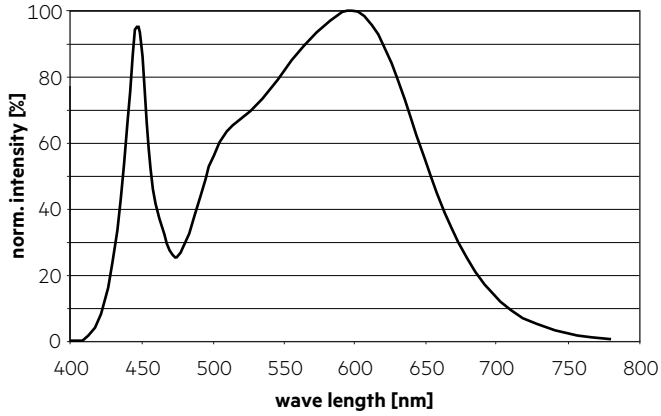

**5,000 K**

| | x0 | y0 |
|---|---|---|
| Center | 0.3447 | 0.3553 |

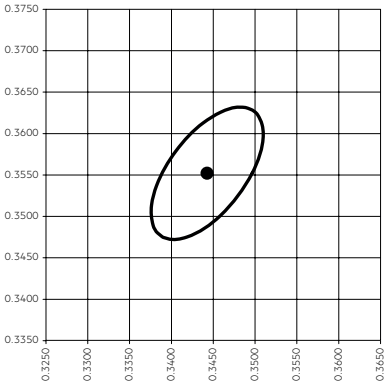


MacAdam Ellipse: 3SDCM

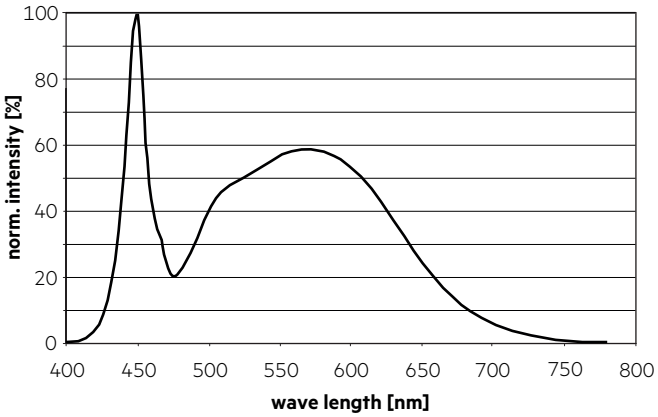


**6,500 K**

| | x0 | y0 |
|---|---|---|
| Center | 0.3123 | 0.3282 |

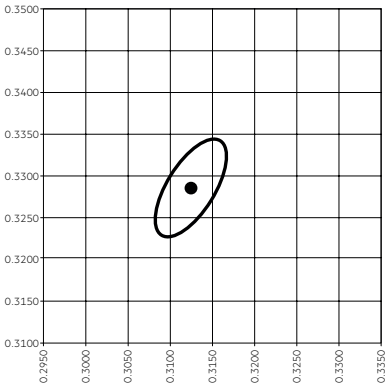


MacAdam Ellipse: 3SDCM

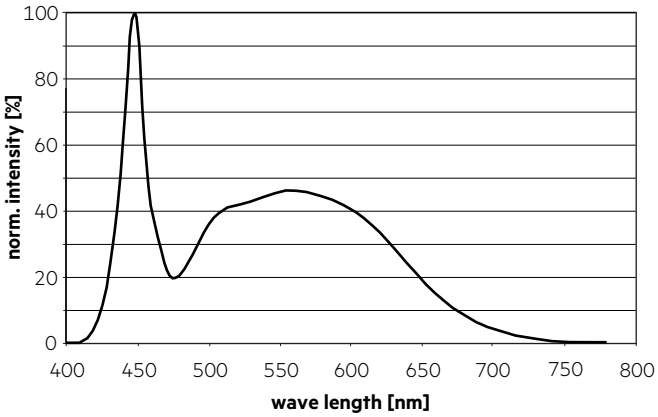

### 6.2 Light distribution

The optical design of the LLE product line ensures optimum homogeneity for the light distribution.

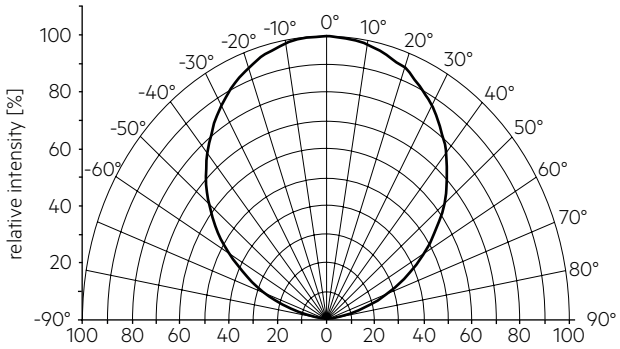


The colour temperature is measured integral over the complete module. The single LED light points can have deviations in the colour coordinates within MacAdam 5.
To ensure an ideal mixture of colours and a homogeneous light distribution a suitable optic (e. g. PMMA diffuser) and a sufficient spacing between module and optic (typ. 4 cm) should be used.

### 6.3 Relative luminous flux vs. tc temperature

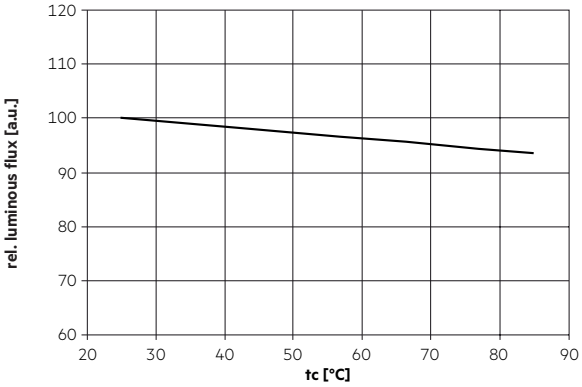


### 6.4 Relative luminous flux vs. operating current

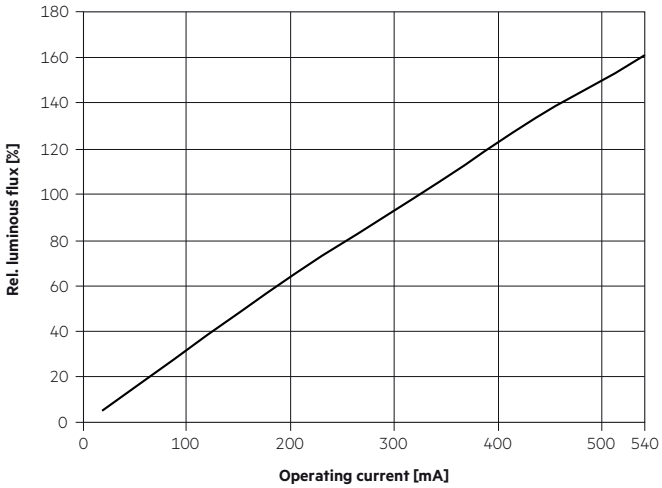


The diagrams are based on statistic values.
The real values can be different.

## 7. Miscellaneous

### 7.1 Additional information

Additional technical information at www.tridonic.com → Technical Data

Guarantee conditions at www.tridonic.com → Services

Lifetime declarations are informative and represent no warranty claim.