molex

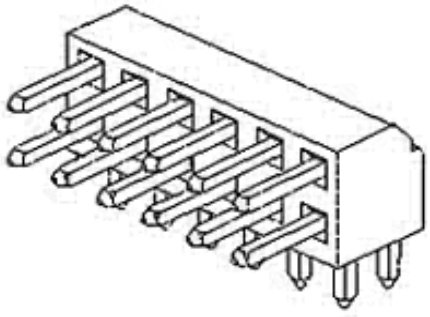

Part Number : 877603016
Product Description : 2.00mm Pitch Milli-Grid Header, Right-Angle, Through Hole, 30 Circuits, 0.38µm Gold (Au) Plating, Mating Pin Length 4.00mm, Tail Length 2.60mm, Tray, Lead-Free
Series Number : 87760
Status : Active
Product Category : PCB Headers and Receptacles

Documents and Resources

Drawings

877603016_sd.pdf

PK-89990-487-001.pdf

3D Models and Design Files

STEP AP242

SOLIDWORKS

Creo

Symbol and Footprint (Multi-Format)

Specifications

503940001-AS-000.pdf

PS-87761-100-001.pdf

877610000-TS-000.pdf

Product Environment Compliance

Compliance

GADSL/IMDS	Compliant with Exemption 44; 34; 33
China RoHS	per SJ/T 11365-2006
EU ELV	Not Relevant
Low-Halogen Status	Not Low-Halogen per IEC 61249-2-21
REACH SVHC	Not Contained per D(2025)7771-DC (04 Feb 2026)

EU RoHS	Compliant per EU 2015/863

Compliance Statements
- EU RoHS
- REACH SVHC
- Low-Halogen

Industry Documents
- IPC 1752A Class C
- IPC 1752A Class D
- Molex Product Compliance Declaration
- IEC-62474
- chemSHERPA (xml)

Substances of Interest
- PFAS

EU RoHS Certificate of Compliance

Additional Product Compliance Information

Part Details

General

Status	Active
Category	PCB Headers and Receptacles
Series	87760
Description	2.00mm Pitch Milli-Grid Header, Right-Angle, Through Hole, 30 Circuits, 0.38µm Gold (Au) Plating, Mating Pin Length 4.00mm, Tail Length 2.60mm, Tray, Lead-Free
Application	Board-to-Board, Wire-to-Board
Comments	Lead-Free version of 87049 series
Component Type	PCB Header
Product Name	Milli-Grid
UPC	822348231706

Agency

CSA	LR19980
UL	E29179

Electrical

Current - Maximum per Contact	2.0A
Voltage - Maximum	125V

Physical

Breakaway	No
Circuits (Loaded)	30
Circuits (maximum)	30
Color - Resin	Black
First Mate / Last Break	No
Flammability	94V-0
Gender	Male
Glow-Wire Capable	No
Guide to Mating Part	No
Keying to Mating Part	No
Lock to Mating Part	No
Mated Height	4.00mm
Material - Metal	Phosphor Bronze
Material - Plating Mating	Gold
Material - Plating Termination	Tin
Material - Resin	High Temperature Thermoplastic
Mounting Style	Through Hole
Net Weight	1.193/g
Number of Rows	2
Orientation	Right Angle
Packaging Type	Tray
PCB Locator	No
PCB Retention	No
PCB Thickness - Recommended	1.60mm
PC Tail Length	2.60mm
Pitch - Mating Interface	2.00mm
Pitch - Termination Interface	2.00mm
Plating min - Mating	0.381µm
Plating min - Termination	2.000µm
Polarized to Mating Part	No
Polarized to PCB	No

Shrouded	Unshrouded
Stackable	Yes
Temperature Range - Operating	-55° to +125°C
Termination Interface Style	Through Hole

Solder Process Data

Max-Duration	14
Lead-Free Process Capability	WAVE
Max-Cycle	1
Max-Temp	265

Mates With / Use With

Mates with Part(s)

Description	Part Number
Milli-Grid Vertical Through Hole PCB Receptacles	78787
Milli-Grid Vertical Through Hole PCB Receptacles	79107
Milli-Grid Vertical Through Hole PCB Receptacles	79108
Milli-Grid Top Entry Surface Mount PCB Receptacles	78788
Milli-Grid Top/Bottom Entry Surface Mount PCB Receptacles	79109
Milli-Grid Top Entry Surface Mount PCB Receptacles	87381
Milli-Grid Side Entry Through Hole PCB Receptacles	87264