Data sheet IO-Link Touch Standard.

Part No.: 84-ASKS-C18-04A8

Technical data

Design	flush
Front form	round
Front dimension	Ø 30 mm
Terminal	Connector M12
Type of illumination	RGB LED
Operating voltage	8,4 - 32 V DC
Lens illumination	illuminative
Lens shape	flush
Lens material	Plastic
Lens optics	transparent
Front bezel material	Plastic
Housing colour	Black
Housing material	Plastic
Weight	0.015 kg
IK front protection	IK08
IP front protection	IP69K
Switching system	Capacitive
Symbol	C18
Operating temperature	– 30 °C … + 65 °C
Approbations	CSA, EHEDG
Communication interface	IO-Link specification
Output	PNP/NPN; NO/NC
Output pulse	Dynamic
LED control	Automatic
Load current	max. 200 mA
Current consumption	at 24 V max. 40 mA
LED colour 1	Green
LED colour 2	Red
Type of actuation	Touch
Operating force	No actuating force necessary
Climate resistance	Relative humidity, max. 95%, non-condensing

Dimensions

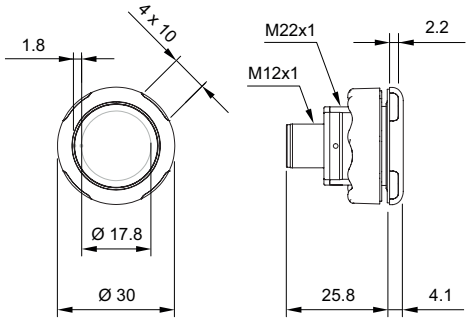

Mounting cut-outs

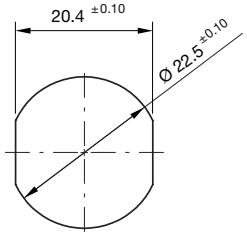

Wiring diagrams

3-pole

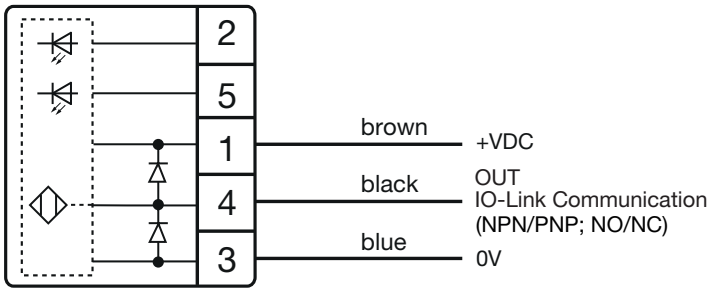

4-pole

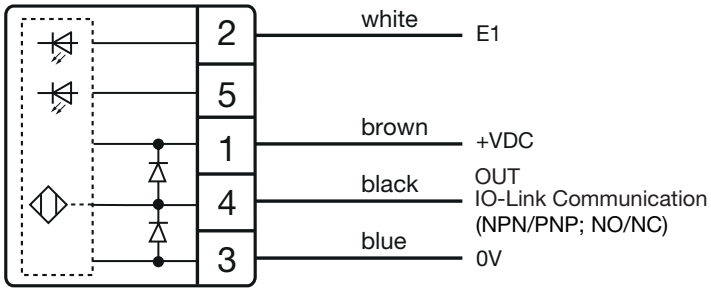

5-pole

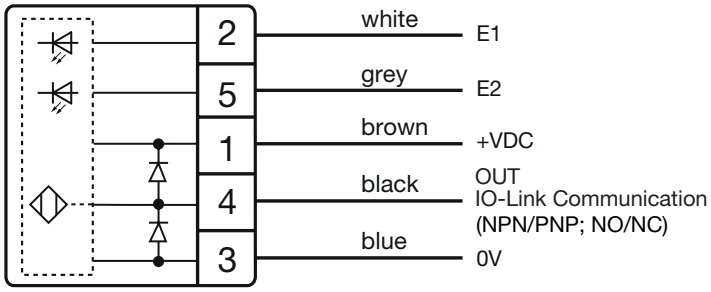
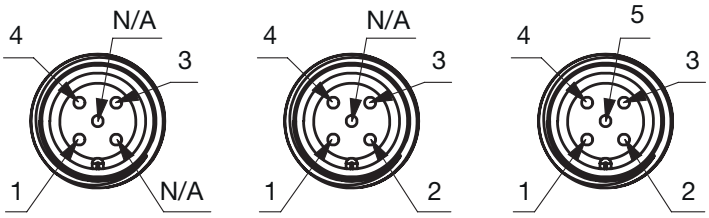
Component layouts