Series 82

Robust and attractive.

https://eao.com/82

82 Information about the Series

Key advantages

- Vandal-resistant: Impact resistant to IK10
- Front protection up to IP67
- Gold contacts available for low voltages and currents
- Optional illumination and laser markings
- Excellent tactile feedback
- Long service life: > 1 million cycles of operation
- Stainless steel anodised aluminium or brass coloured switches
- 16 mm, 19 mm or 22 mm mounting

Typical application areas

- Exposed public areas: e.g. ticketing and vending machines
- Industrial: Machinery and factory equipment
- Lifting and moving: Elevators and people movers
- Building management: Access control and security systems
- Audio and video equipment
- Medical equipment
- Food Industry (corrosion and acid resistant versions available on request)

Functions

- Pushbutton
- Illuminated pushbutton
- Indicator

Design

- Flush

IP front protection

- IP65
- IP67

Raitings

- 24 VAC / DC (0.2 A)
- 42 VAC (100 mA)
- 240 VAC / DC (3 A)

Mounting cut-outs

- Ø 16 mm
- Ø 19 mm
- Ø 22.3 mm

Terminal

- Plug-in terminal
- Screw terminal
- Connector M12
- Cable with connector M12
- Cable

Lens Material

- Aluminium
- Stainless steel
- Brass
- Plastic metalised

Markings

- Laser marking

Approvals

- CB
- UL
- C UL
- CCC

Conformities

- CE
- 2014/35/EU (LVD)
- 2011/65/EU (RoHS)

Flush design	
Pushbutton Ø 19 mm, stainless steel 304, silver contact	4
Pushbutton Ø 19 mm, stainless steel 304, gold contact	6
Illuminated pushbutton Ø 19 mm, stainless steel 304, silver contact	8
Illuminated pushbutton Ø 19 mm, stainless steel 304, gold contact	10
Illuminated pushbutton Ø 22 mm, stainless steel 304, silver contact	12
Illuminated pushbutton Ø 22 mm, stainless steel 304, gold contact	14
Illuminated pushbutton Ø 22 mm, stainless steel 304, with symbol	16
Illuminated pushbutton Ø 22 mm, stainless steel 316L	18
Pushbutton/illuminated pushbutton with M12 connector, Ø 22 mm, stainless steel 316L	20
Pushbutton/illuminated pushbutton with cable and M12 connector, Ø 22 mm, stainless steel 316L	22
Pushbutton/illuminated pushbutton with cable and M12 connector, 90°, Ø 22 mm, stainless steel 316L	24
Pushbutton/illuminated pushbutton with cable, Ø 22 mm, stainless steel 316L	26
Pushbutton/illuminated pushbutton with cable, 90°, Ø 22 mm, stainless steel 316L	28
Indicator 19 mm, stainless steel 304,	30
Indicator 22 mm, stainless steel 304,	32
Accessories	**34**
Technical data	**37**
Marking	**39**
Order examples	**40**
Application guidelines	**42**
Index	**43**

Pushbutton Ø 19 mm, stainless steel 304, silver contact, IP65, IP67

Product can differ from the current configuration.

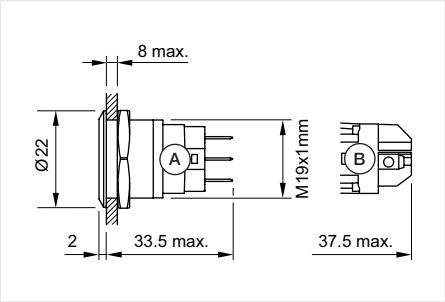

Dimensions [mm]
A = Solder terminal
B = Screw terminal

Equipment consisting of (schematic overview)

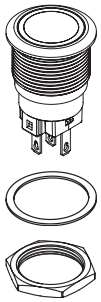

Each Part Number listed below includes all the black components shown in the 3D-drawing.

General information

- The laser 2D-technology can mark all stainless steel versions with flat lenses - flush-mounting as well as raised versions.

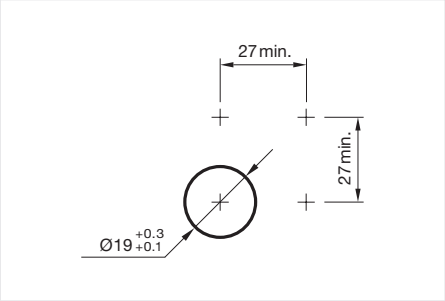

Mounting cut-outs [mm]

Pushbutton

Switching action	Lens shape	Terminal	Switching voltage	Symbol	Part No.	Wiring diagram	Com-ponent Layout
Maintained	flush	Screw terminal	240 V		82-5152.2000	339	88
Momentary	flush	Screw terminal	240 V		82-5152.1000	338	88
Maintained	flush	Soldering terminal	240 V		82-5151.2000	339	84
Momentary	flush	Soldering terminal	240 V		82-5151.1000	338	84
	flush	Soldering terminal	240 V	ON/OFF	82-5151.1000.B001	338	84
	flush	Soldering terminal	240 V	Standby	82-5151.1000.B002	338	84
	flush	Soldering terminal	240 V	Light	82-5151.1000.B003	338	84
	flush	Soldering terminal	240 V	Info	82-5151.1000.B004	338	84
	flush	Soldering terminal	240 V	Bell	82-5151.1000.B005	338	84
	flush	Soldering terminal	240 V	Door open	82-5151.1000.B006	338	84
Maintained	flush	Soldering terminal	240 V	ON/OFF	82-5151.2000.B001	339	84
	flush	Soldering terminal	240 V	Standby	82-5151.2000.B002	339	84
	flush	Soldering terminal	240 V	Light	82-5151.2000.B003	339	84
	flush	Soldering terminal	240 V	Info	82-5151.2000.B004	339	84
	flush	Soldering terminal	240 V	Bell	82-5151.2000.B005	339	84
	flush	Soldering terminal	240 V	Door open	82-5151.2000.B006	339	84
Momentary	flush	Screw terminal	240 V	ON/OFF	82-5152.1000.B001	338	88
	flush	Screw terminal	240 V	Standby	82-5152.1000.B002	338	88
	flush	Screw terminal	240 V	Light	82-5152.1000.B003	338	88
	flush	Screw terminal	240 V	Info	82-5152.1000.B004	338	88
	flush	Screw terminal	240 V	Bell	82-5152.1000.B005	338	88
	flush	Screw terminal	240 V	Door open	82-5152.1000.B006	338	88
Maintained	flush	Screw terminal	240 V	ON/OFF	82-5152.2000.B001	339	88
	flush	Screw terminal	240 V	Standby	82-5152.2000.B002	339	88
	flush	Screw terminal	240 V	Light	82-5152.2000.B003	339	88
	flush	Screw terminal	240 V	Info	82-5152.2000.B004	339	88
	flush	Screw terminal	240 V	Bell	82-5152.2000.B005	339	88
	flush	Screw terminal	240 V	Door open	82-5152.2000.B006	339	88

Wiring diagrams

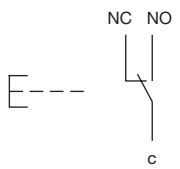

Wiring diagram 338

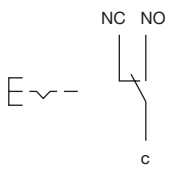

Wiring diagram 339

Component layouts

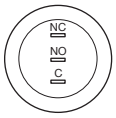

Component layout 84

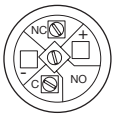

Component layout 88

Come take a look at our LinkedIn profile today! *Be sure to give us a follow so that you can fully interact with us.*

https://www.linkedin.com/company/eao/

www.eao.com

eao

Your Expert Partner for **Human Machine Interfaces**

82 Flush design

Pushbutton Ø 19 mm, stainless steel 304, gold contact, IP65, IP67

Product can differ from the current configuration.

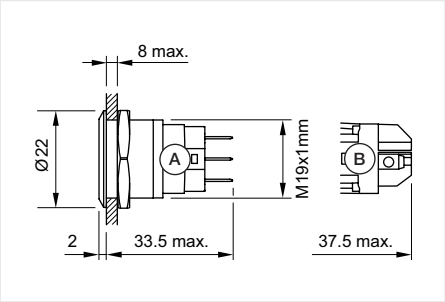

Dimensions [mm]
A = Solder terminal
B = Screw terminal

Equipment consisting of (schematic overview)

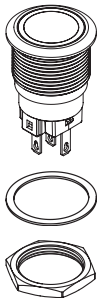

Each Part Number listed below includes all the black components shown in the 3D-drawing.

General information

- The laser 2D-technology can mark all stainless steel versions with flat lenses - flush-mounting as well as raised versions.

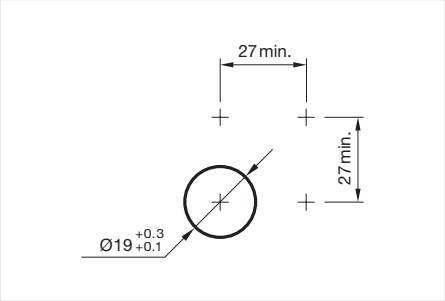

Mounting cut-outs [mm]

Pushbutton

Switching action	Lens shape	Terminal	Switching voltage	Symbol	Part No.	Wiring diagram	Com-ponent Layout
Maintained	flush	Screw terminal	24 V		82-5154.2000	339	88
Momentary	flush	Screw terminal	24 V		82-5154.1000	338	88
Maintained	flush	Soldering terminal	24 V		82-5153.2000	339	84
Momentary	flush	Soldering terminal	24 V		82-5153.1000	338	84
	flush	Soldering terminal	24 V	ON/OFF	82-5153.1000.B001	338	84
	flush	Soldering terminal	24 V	Standby	82-5153.1000.B002	338	84
	flush	Soldering terminal	24 V	Light	82-5153.1000.B003	338	84
	flush	Soldering terminal	24 V	Info	82-5153.1000.B004	338	84
	flush	Soldering terminal	24 V	Bell	82-5153.1000.B005	338	84
	flush	Soldering terminal	24 V	Door open	82-5153.1000.B006	338	84
Maintained	flush	Soldering terminal	24 V	ON/OFF	82-5153.2000.B001	339	84
	flush	Soldering terminal	24 V	Standby	82-5153.2000.B002	339	84
	flush	Soldering terminal	24 V	Light	82-5153.2000.B003	339	84
	flush	Soldering terminal	24 V	Info	82-5153.2000.B004	339	84
	flush	Soldering terminal	24 V	Bell	82-5153.2000.B005	339	84
	flush	Soldering terminal	24 V	Door open	82-5153.2000.B006	339	84
Momentary	flush	Screw terminal	24 V	ON/OFF	82-5154.1000.B001	338	88
	flush	Screw terminal	24 V	Standby	82-5154.1000.B002	338	88
	flush	Screw terminal	24 V	Light	82-5154.1000.B003	338	88
	flush	Screw terminal	24 V	Info	82-5154.1000.B004	338	88
	flush	Screw terminal	24 V	Bell	82-5154.1000.B005	338	88
	flush	Screw terminal	24 V	Door open	82-5154.1000.B006	338	88
Maintained	flush	Screw terminal	24 V	ON/OFF	82-5154.2000.B001	339	88
	flush	Screw terminal	24 V	Standby	82-5154.2000.B002	339	88
	flush	Screw terminal	24 V	Light	82-5154.2000.B003	339	88
	flush	Screw terminal	24 V	Info	82-5154.2000.B004	339	88
	flush	Screw terminal	24 V	Bell	82-5154.2000.B005	339	88
	flush	Screw terminal	24 V	Door open	82-5154.2000.B006	339	88

Wiring diagrams

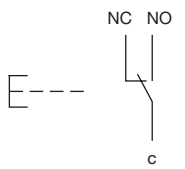

Wiring diagram 338

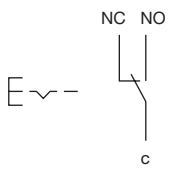

Wiring diagram 339

Component layouts

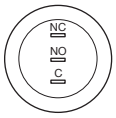

Component layout 84

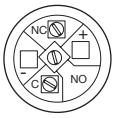

Component layout 88

82 Flush design

Illuminated pushbutton Ø 19 mm, stainless steel 304, silver contact, IP65, IP67

Product can differ from the current configuration.

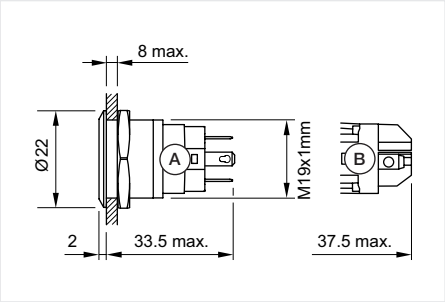

Dimensions [mm]
A = Solder terminal
B = Screw terminal

Equipment consisting of (schematic overview)

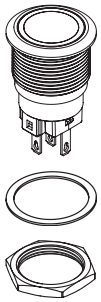

Each Part Number listed below includes all the black components shown in the 3D-drawing.

General information

- The laser 2D-technology can mark all stainless steel versions with flat lenses - flush-mounting as well as raised versions.

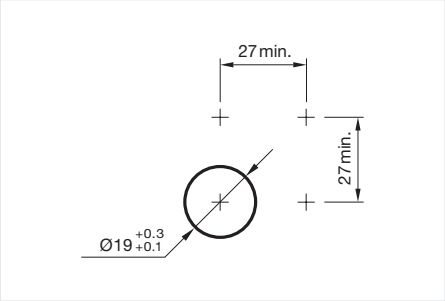

Mounting cut-outs [mm]

Illuminated pushbutton

Switching action	Illumination colour	Lens shape	Terminal	Shape of illumination	Switching voltage	Operating voltage LED	Part No.	Wiring diagram	Component Layout
Maintained	White	flush	Screw terminal	Ring	240 V	24 V DC	82-5152.2154	341	87
	Yellow	flush	Screw terminal	Ring	240 V	24 V DC	82-5152.2144	341	87
	Green	flush	Screw terminal	Ring	240 V	24 V DC	82-5152.2134	341	87
	Blue	flush	Screw terminal	Ring	240 V	24 V DC	82-5152.2124	341	87
	Red	flush	Screw terminal	Ring	240 V	24 V DC	82-5152.2114	341	87
Momentary	White	flush	Screw terminal	Ring	240 V	24 V DC	82-5152.1154	340	87
	Yellow	flush	Screw terminal	Ring	240 V	24 V DC	82-5152.1144	340	87
	Green	flush	Screw terminal	Ring	240 V	24 V DC	82-5152.1134	340	87
	Blue	flush	Screw terminal	Ring	240 V	24 V DC	82-5152.1124	340	87
	Red	flush	Screw terminal	Ring	240 V	24 V DC	82-5152.1114	340	87
Maintained	White	flush	Soldering terminal	Ring	240 V	24 V DC	82-5151.2154	341	85
	Yellow	flush	Soldering terminal	Ring	240 V	24 V DC	82-5151.2144	341	85
	Green	flush	Soldering terminal	Ring	240 V	24 V DC	82-5151.2134	341	85
	Blue	flush	Soldering terminal	Ring	240 V	24 V DC	82-5151.2124	341	85
	Red	flush	Soldering terminal	Ring	240 V	24 V DC	82-5151.2114	341	85
Momentary	White	flush	Soldering terminal	Ring	240 V	24 V DC	82-5151.1154	340	85
	Yellow	flush	Soldering terminal	Ring	240 V	24 V DC	82-5151.1144	340	85
	Green	flush	Soldering terminal	Ring	240 V	24 V DC	82-5151.1134	340	85
	Blue	flush	Soldering terminal	Ring	240 V	24 V DC	82-5151.1124	340	85
	Red	flush	Soldering terminal	Ring	240 V	24 V DC	82-5151.1114	340	85

Switching action	Illumination colour	Lens shape	Terminal	Shape of illumination	Switching voltage	Operating voltage LED	Part No.	Wiring diagram	Component Layout
Maintained	Red / Green	flush	Screw terminal	Dot	240 V	24 V DC	82-5152.22A4	342	87
	Red / Green	flush	Screw terminal	Ring	240 V	24 V DC	82-5152.21A4	342	87
Momentary	Red / Green	flush	Screw terminal	Dot	240 V	24 V DC	82-5152.12A4	343	87
	Red / Green	flush	Screw terminal	Ring	240 V	24 V DC	82-5152.11A4	343	87
Maintained	Red / Green	flush	Soldering terminal	Dot	240 V	24 V DC	82-5151.22A4	342	85
	Red / Green	flush	Soldering terminal	Ring	240 V	24 V DC	82-5151.21A4	342	85
Momentary	Red / Green	flush	Soldering terminal	Dot	240 V	24 V DC	82-5151.12A4	343	85
	Red / Green	flush	Soldering terminal	Ring	240 V	24 V DC	82-5151.11A4	343	85

Wiring diagrams

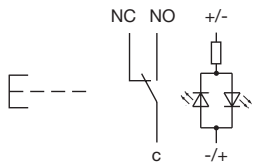

Wiring diagram 340

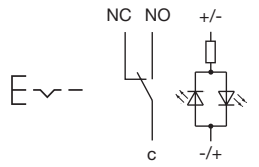

Wiring diagram 341

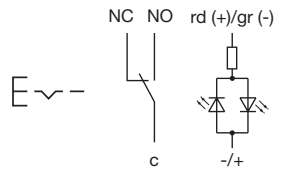

Wiring diagram 342

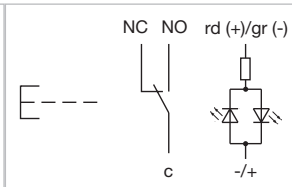

Wiring diagram 343

Component layouts

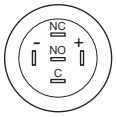

Component layout 85

Component layout 87

Illuminated pushbutton Ø 19 mm, stainless steel 304, gold contact, IP65, IP67

Product can differ from the current configuration.

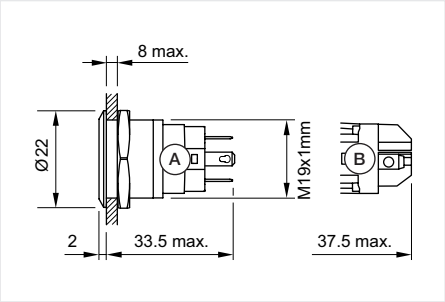

Dimensions [mm]
A = Solder terminal
B = Screw terminal

Equipment consisting of (schematic overview)

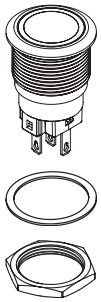

Each Part Number listed below includes all the black components shown in the 3D-drawing.

General information

- The laser 2D-technology can mark all stainless steel versions with flat lenses - flush-mounting as well as raised versions.

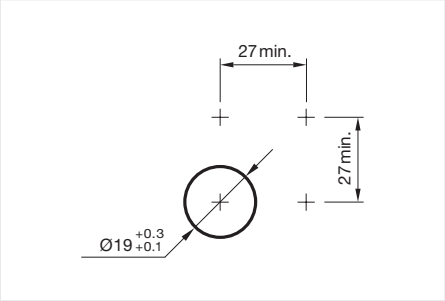

Mounting cut-outs [mm]

Illuminated pushbutton

Switching action	Illumination colour	Lens shape	Terminal	Shape of illumination	Switching voltage	Operating voltage LED	Part No.	Wiring diagram	Component Layout
Maintained	Yellow	flush	Screw terminal	Ring	24 V	24 V DC	82-5154.2144	341	87
	Green	flush	Screw terminal	Ring	24 V	24 V DC	82-5154.2134	341	87
	Blue	flush	Screw terminal	Ring	24 V	24 V DC	82-5154.2124	341	87
	Red	flush	Screw terminal	Ring	24 V	24 V DC	82-5154.2114	341	87
Momentary	White	flush	Screw terminal	Ring	24 V	24 V DC	82-5154.1154	340	87
	Yellow	flush	Screw terminal	Ring	24 V	24 V DC	82-5154.1144	340	87
	Green	flush	Screw terminal	Ring	24 V	24 V DC	82-5154.1134	340	87
	Blue	flush	Screw terminal	Ring	24 V	24 V DC	82-5154.1124	340	87
	Red	flush	Screw terminal	Ring	24 V	24 V DC	82-5154.1114	340	87
Maintained	White	flush	Soldering terminal	Ring	24 V	24 V DC	82-5153.2154	341	85
	Yellow	flush	Soldering terminal	Ring	24 V	24 V DC	82-5153.2144	341	85
	Green	flush	Soldering terminal	Ring	24 V	24 V DC	82-5153.2134	341	85
	Blue	flush	Soldering terminal	Ring	24 V	24 V DC	82-5153.2124	341	85
	Red	flush	Soldering terminal	Ring	24 V	24 V DC	82-5153.2114	341	85
Momentary	White	flush	Soldering terminal	Ring	24 V	24 V DC	82-5153.1154	340	85
	Yellow	flush	Soldering terminal	Ring	24 V	24 V DC	82-5153.1144	340	85
	Green	flush	Soldering terminal	Ring	24 V	24 V DC	82-5153.1134	340	85
	Blue	flush	Soldering terminal	Ring	24 V	24 V DC	82-5153.1124	340	85
	Red	flush	Soldering terminal	Ring	24 V	24 V DC	82-5153.1114	340	85
Maintained	Red / Green	flush	Screw terminal	Dot	24 V	24 V DC	82-5154.22A4	342	87

Switching action	Illumination colour	Lens shape	Terminal	Shape of illumination	Switching voltage	Operating voltage LED	Part No.	Wiring diagram	Component Layout
Maintained	Red / Green	flush	Screw terminal	Ring	24 V	24 V DC	82-5154.21A4	342	87
Momentary	Red / Green	flush	Screw terminal	Dot	24 V	24 V DC	82-5154.12A4	343	87
	Red / Green	flush	Screw terminal	Ring	24 V	24 V DC	82-5154.11A4	343	87
Maintained	Red / Green	flush	Soldering terminal	Dot	24 V	24 V DC	82-5153.22A4	342	85
	Red / Green	flush	Soldering terminal	Ring	24 V	24 V DC	82-5153.21A4	342	85
Momentary	Red / Green	flush	Soldering terminal	Dot	24 V	24 V DC	82-5153.12A4	343	85
	Red / Green	flush	Soldering terminal	Ring	24 V	24 V DC	82-5153.11A4	343	85

Wiring diagrams

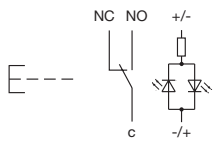

Wiring diagram 340

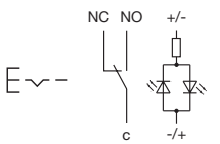

Wiring diagram 341

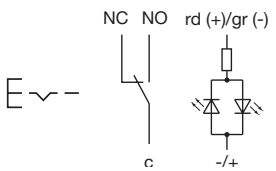

Wiring diagram 342

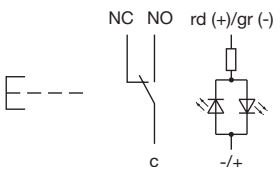

Wiring diagram 343

Component layouts

Component layout 85

Component layout 87

82 Flush design

Illuminated pushbutton Ø 22 mm, stainless steel 304, silver contact, IP65, IP67

Product can differ from the current configuration.

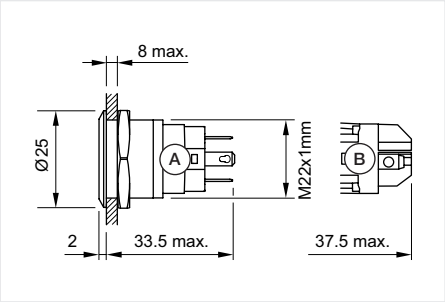

Dimensions [mm]
A = Solder terminal
B = Screw terminal

Equipment consisting of (schematic overview)

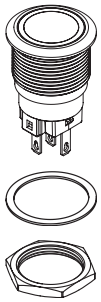

Each Part Number listed below includes all the black components shown in the 3D-drawing.

General information

- The laser 2D-technology can mark all stainless steel versions with flat lenses - flush-mounting as well as raised versions.

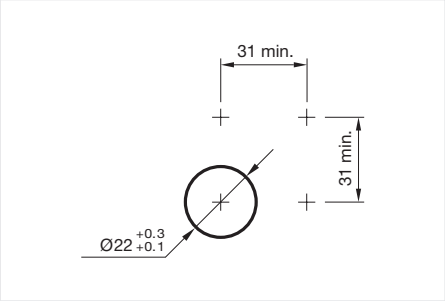

Mounting cut-outs [mm]

Illuminated pushbutton

Switching action	Illumination colour	Lens shape	Terminal	Shape of illumination	Switching voltage	Operating voltage LED	Part No.	Wiring diagram	Component Layout
Maintained	Red / Green	flush	Screw terminal	Dot	240 V	24 V DC	82-6152.22A4	342	87
	Red / Green	flush	Screw terminal	Ring	240 V	24 V DC	82-6152.21A4	342	87
Momentary	Red / Green	flush	Screw terminal	Dot	240 V	24 V DC	82-6152.12A4	343	87
	Red / Green	flush	Screw terminal	Ring	240 V	24 V DC	82-6152.11A4	343	87
Maintained	Red / Green	flush	Soldering terminal	Dot	240 V	24 V DC	82-6151.22A4	342	85
	Red / Green	flush	Soldering terminal	Ring	240 V	24 V DC	82-6151.21A4	342	85
Momentary	Red / Green	flush	Soldering terminal	Dot	240 V	24 V DC	82-6151.12A4	343	85
	Red / Green	flush	Soldering terminal	Ring	240 V	24 V DC	82-6151.11A4	343	85

Wiring diagrams

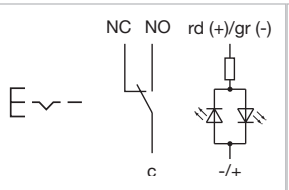

Wiring diagram 342

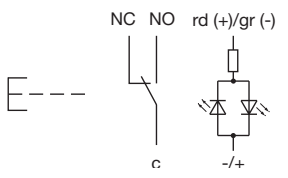

Wiring diagram 343

Component layouts

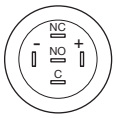

Component layout 85

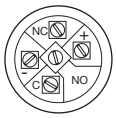

Component layout 87

Robust and attractive.
The optimised Series 82.

Now with gold-plated silver contacts for low-level applications available.

- Impact resistant to IK10
- Front protection IP67
- Low-level applications possible
- Optional illumination and laser marking
- Excellent tactile feedback
- Long service life

www.eao.com

Your Expert Partner for **Human Machine Interfaces**

82 Flush design

Illuminated pushbutton Ø 22 mm, stainless steel 304, gold contact, IP65, IP67

Product can differ from the current configuration.

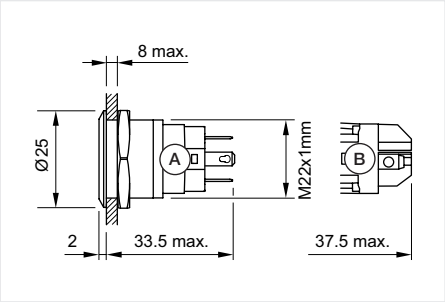

Dimensions [mm]
A = Solder terminal
B = Screw terminal

Equipment consisting of (schematic overview)

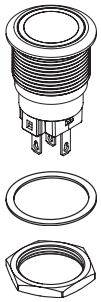

Each Part Number listed below includes all the black components shown in the 3D-drawing.

General information

- The laser 2D-technology can mark all stainless steel versions with flat lenses - flush-mounting as well as raised versions.

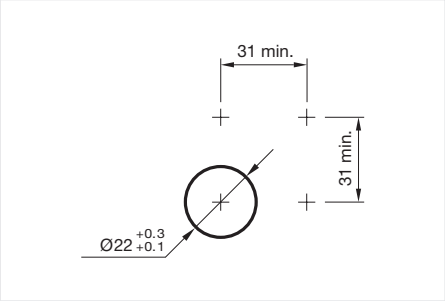

Mounting cut-outs [mm]

Illuminated pushbutton

Switching action	Illumination colour	Lens shape	Terminal	Shape of illumination	Switching voltage	Operating voltage LED	Part No.	Wiring diagram	Component Layout
Maintained	White	flush	Screw terminal	Ring	24 V	24 V DC	82-6154.2154	341	87
	Red / Green	flush	Screw terminal	Dot	24 V	24 V DC	82-6154.22A4	342	87
	Red / Green	flush	Screw terminal	Ring	24 V	24 V DC	82-6154.21A4	342	87
Momentary	Red / Green	flush	Screw terminal	Dot	24 V	24 V DC	82-6154.12A4	343	87
	Red / Green	flush	Screw terminal	Ring	24 V	24 V DC	82-6154.11A4	343	87
Maintained	Red / Green	flush	Soldering terminal	Dot	24 V	24 V DC	82-6153.22A4	342	85
	Red / Green	flush	Soldering terminal	Ring	24 V	24 V DC	82-6153.21A4	342	85
Momentary	Red / Green	flush	Soldering terminal	Dot	24 V	24 V DC	82-6153.12A4	343	85
	Red / Green	flush	Soldering terminal	Ring	24 V	24 V DC	82-6153.11A4	343	85

Wiring diagrams

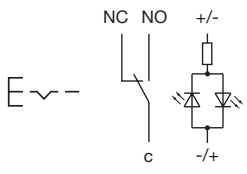

Wiring diagram 341

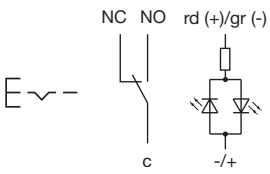

Wiring diagram 342

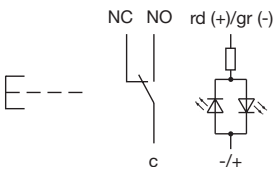

Wiring diagram 343

Component layouts

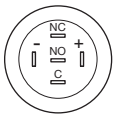

Component layout 85

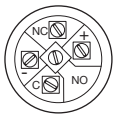

Component layout 87

01
02
03
04
09
14
17
18
19
22
31
41
45
51
56
57
61
70
71
82
84
92
96

Illuminated pushbutton Ø 22 mm stainless steel 304, with symbol, IP65, IP67

Product can differ from the current configuration.

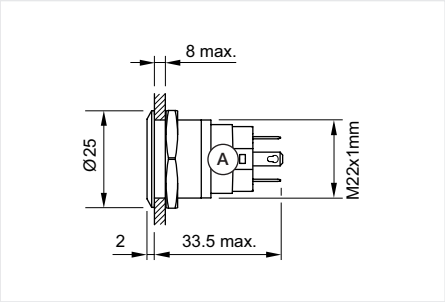

Dimensions [mm]

Equipment consisting of (schematic overview)

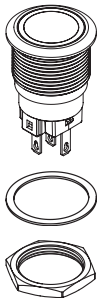

Each Part Number listed below includes all the black components shown in the 3D-drawing.

General information

- The laser 2D-technology can mark all stainless steel versions with flat lenses - flush-mounting as well as raised versions.

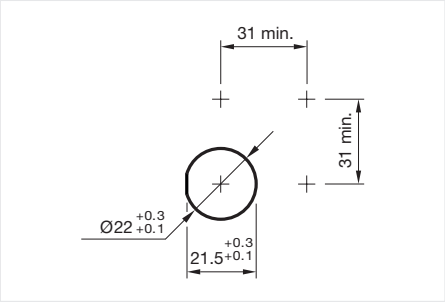

Mounting cut-outs [mm]

Illuminated pushbutton

Switching action	Illumination colour	Lens shape	Terminal	Symbol	Shape of illumination	Switching voltage	Operating voltage LED	Part No.	Wiring diagram	Com-ponent Layout
Momentary	Red	flach	Soldering terminal	ON/OFF	Symbol	35 V	24 V DC	82-6151.1A14.B001	340	85
	Green	flach	Soldering terminal	ON/OFF	Symbol	35 V	24 V DC	82-6151.1A34.B001	340	85
	Red	flach	Soldering terminal	Standby	Symbol	35 V	24 V DC	82-6151.1A14.B002	340	85
	Green	flach	Soldering terminal	Standby	Symbol	35 V	24 V DC	82-6151.1A34.B002	340	85
	Blue	flach	Soldering terminal	Info	Symbol	35 V	24 V DC	82-6151.1A24.B004	340	85
	White	flach	Soldering terminal	Info	Symbol	35 V	24 V DC	82-6151.1A54.B004	340	85
	Red	flach	Soldering terminal	Door open	Symbol	35 V	24 V DC	82-6151.1A14.B006	340	85
	Green	flach	Soldering terminal	Door open	Symbol	35 V	24 V DC	82-6151.1A34.B006	340	85
	Blue	flach	Soldering terminal	Door open	Symbol	35 V	24 V DC	82-6151.1A24.B006	340	85
	Red	flach	Soldering terminal	SOS	Symbol	35 V	24 V DC	82-6151.1A14.B015	340	85
	Blue	flach	Soldering terminal	SOS	Symbol	35 V	24 V DC	82-6151.1A24.B015	340	85
	White	flach	Soldering terminal	SOS	Symbol	35 V	24 V DC	82-6151.1A54.B015	340	85
Maintained	Red	flach	Soldering terminal	ON/OFF	Symbol	35 V	24 V DC	82-6151.2A14.B001	341	85
	Green	flach	Soldering terminal	ON/OFF	Symbol	35 V	24 V DC	82-6151.2A34.B001	341	85
Momentary	Red/Green	flach	Soldering terminal	ON/OFF	Symbol	35 V	24 V DC	82-6151.1AA4.B001	343	85
	Red/Green	flach	Soldering terminal	Standby	Symbol	35 V	24 V DC	82-6151.1AA4.B002	343	85
	Red/Green	flach	Soldering terminal	Info	Symbol	35 V	24 V DC	82-6151.1AA4.B004	343	85
	Red/Green	flach	Soldering terminal	Door open	Symbol	35 V	24 V DC	82-6151.1AA4.B006	343	85
	Red/Green	flach	Soldering terminal	SOS	Symbol	35 V	24 V DC	82-6151.1AA4.B015	343	85
Maintained	Red/Green	flach	Soldering terminal	ON/OFF	Symbol	35 V	24 V DC	82-6151.2AA4.B001	342	85

Wiring diagrams

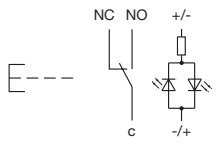

Wiring diagram 340

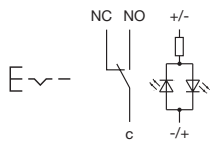

Wiring diagram 341

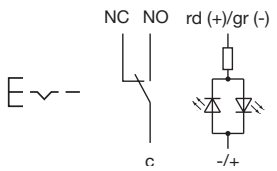

Wiring diagram 342

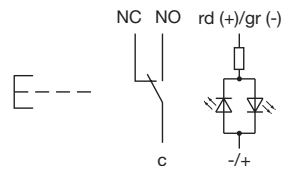

Wiring diagram 343

Component layouts

Component layout 85

01
02
03
04
09
14
17
18
19
22
31
41
45
51
56
57
61
70
71
82
84
92
96

Illuminated pushbutton Ø 22 mm, stainless steel 316L, IP65, IP67

Product can differ from the current configuration.

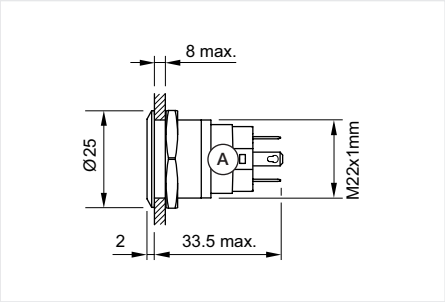

Dimensions [mm]

Equipment consisting of (schematic overview)

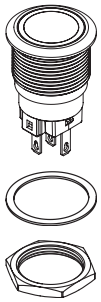

Each Part Number listed below includes all the black components shown in the 3D-drawing.

General information

- The laser 2D-technology can mark all stainless steel versions with flat lenses - flush-mounting as well as raised versions.

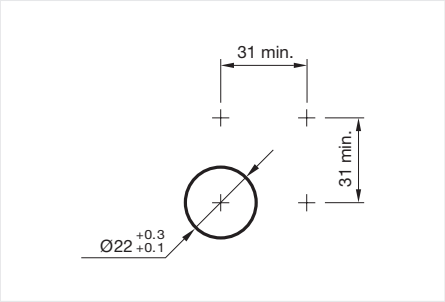

Mounting cut-outs [mm]

Illuminated pushbutton

Switching action	Illumination colour	Lens shape	Terminal	Shape of illumination	Switching voltage	Operating voltage LED	Part No.	Wiring diagram	Component Layout
Momentary	Red	flush	Plug-in terminal	Ring (Tritan)	35 V	24 V DC	82-6651.1114	340	85
	Blue	flush	Plug-in terminal	Ring (Tritan)	35 V	24 V DC	82-6651.1124	340	85
	Green	flush	Plug-in terminal	Ring (Tritan)	35 V	24 V DC	82-6651.1134	340	85
	White	flush	Plug-in terminal	Ring (Tritan)	35 V	24 V DC	82-6651.1154	340	85
Maintained	Red	flush	Plug-in terminal	Ring (Tritan)	35 V	24 V DC	82-6651.2114	341	85
	Blue	flush	Plug-in terminal	Ring (Tritan)	35 V	24 V DC	82-6651.2124	341	85
	Green	flush	Plug-in terminal	Ring (Tritan)	35 V	24 V DC	82-6651.2134	341	85
	White	flush	Plug-in terminal	Ring (Tritan)	35 V	24 V DC	82-6651.2154	341	85
Momentary		flush	Plug-in terminal		35 V		82-6651.1000	338	84
Maintained		flush	Plug-in terminal		35 V		82-6651.2000	339	84

Wiring diagrams

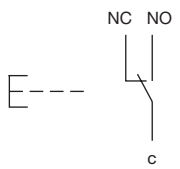

Wiring diagram 338

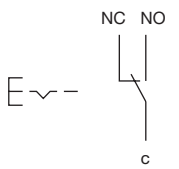

Wiring diagram 339

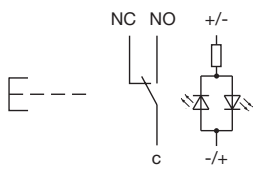

Wiring diagram 340

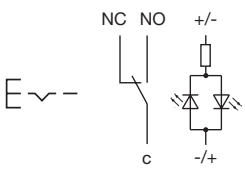

Wiring diagram 341

Component layouts

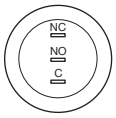

Component layout 84

Component layout 85

On our website you can download technical data, assembly instructions, catalogs, brochures *and much more.*

www.eao.com

eao

Your Expert Partner for **Human Machine Interfaces**

01
02
03
04
09
14
17
18
19
22
31
41
45
51
56
57
61
70
71
82
84
92
96

Pushbutton, illuminated pushbutton with M12 connector, Ø 22 mm, stainless steel 316L, IP65, IP67

Product can differ from the current configuration.

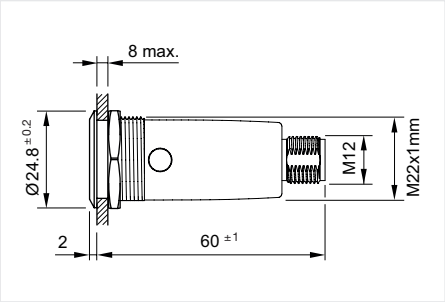

Dimensions [mm]

Equipment consisting of (schematic overview)

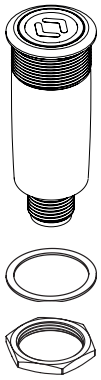

Each Part Number listed below includes all the black components shown in the 3D-drawing.

General information

- The laser 2D-technology can mark all stainless steel versions with flat lenses - flush-mounting as well as raised versions.

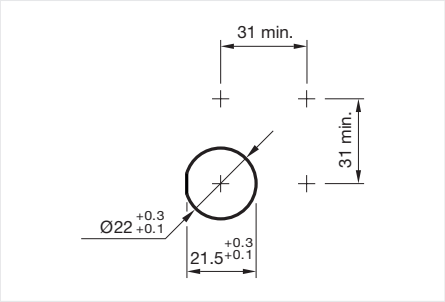

Mounting cut-outs [mm]

Pushbutton

Switching action	Lens shape	Terminal	Switching voltage	Part No.	Wiring diagram	Component Layout
Momentary	flush	M12 connector (5 pins)	35 V	82-6657.1000	338	112
Maintained	flush	M12 connector (5 pins)	35 V	82-6657.2000	339	112

Illuminated pushbutton

Switching action	Illumination colour	Lens shape	Terminal	Shape of illumination	Switching voltage	Operating voltage LED	Part No.	Wiring diagram	Component Layout
Momentary	Red	flush	M12 connector (5 pins)	Ring (Tritan)	35 V	24 V DC	82-6657.1114	340	112
	Blue	flush	M12 connector (5 pins)	Ring (Tritan)	35 V	24 V DC	82-6657.1124	340	112
	Green	flush	M12 connector (5 pins)	Ring (Tritan)	35 V	24 V DC	82-6657.1134	340	112
	White	flush	M12 connector (5 pins)	Ring (Tritan)	35 V	24 V DC	82-6657.1154	340	112
Maintained	Red	flush	M12 connector (5 pins)	Ring (Tritan)	35 V	24 V DC	82-6657.2114	341	112
	Blue	flush	M12 connector (5 pins)	Ring (Tritan)	35 V	24 V DC	82-6657.2124	341	112
	Green	flush	M12 connector (5 pins)	Ring (Tritan)	35 V	24 V DC	82-6657.2134	341	112
	White	flush	M12 connector (5 pins)	Ring (Tritan)	35 V	24 V DC	82-6657.2154	341	112

Wiring diagrams

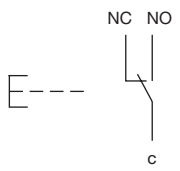

Wiring diagram 338

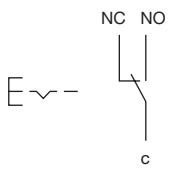

Wiring diagram 339

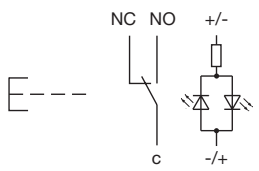

Wiring diagram 340

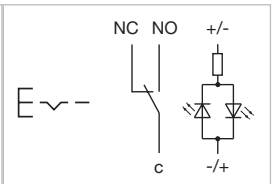

Wiring diagram 341

Component layouts

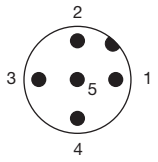

Component layout 112

1 = NC
2 = LED+
3 = Common
4 = LED-
5 = NO
A-Coded

82 Flush design

Pushbutton, illum. pushbutton with cable + M12 connector, Ø 22 mm, stainless steel 316L, IP65, IP67

Product can differ from the current configuration.

General information

- The laser 2D-technology can mark all stainless steel versions with flat lenses - flush-mounting as well as raised versions.

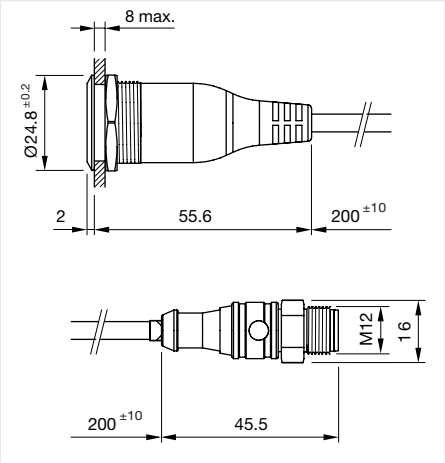

Dimensions [mm]

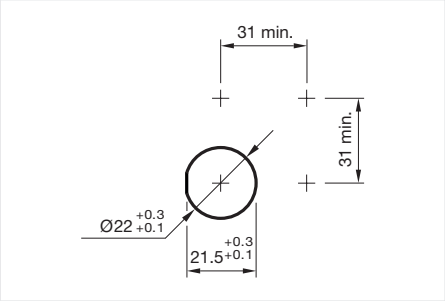

Mounting cut-outs [mm]

Equipment consisting of (schematic overview)

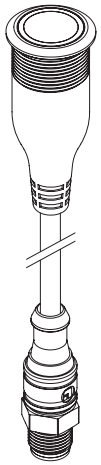

Actuator

Seal

Fixing nut

Each Part Number listed below includes all the black components shown in the 3D-drawing.

Pushbutton

Switching action	Lens shape	Terminal	Switching voltage	Part No.	Wiring diagram	Com-ponent Layout
Momentary	flush	Cable with M12 connector (5 pins)	35 V	82-665A.1000	338	112
Maintained	flush	Cable with M12 connector (5 pins)	35 V	82-665A.2000	339	112

Illuminated pushbutton

Switching action	Illumination colour	Lens shape	Terminal	Shape of illumi-nation	Switching voltage	Operating voltage LED	Part No.	Wiring diagram	Com-ponent Layout
Momentary	Red	flush	Cable with M12 connector (5 pins)	Ring (Tritan)	35 V	24 V DC	82-665A.1114	340	112
	Blue	flush	Cable with M12 connector (5 pins)	Ring (Tritan)	35 V	24 V DC	82-665A.1124	340	112
	Green	flush	Cable with M12 connector (5 pins)	Ring (Tritan)	35 V	24 V DC	82-665A.1134	340	112
	White	flush	Cable with M12 connector (5 pins)	Ring (Tritan)	35 V	24 V DC	82-665A.1154	340	112
Maintained	Red	flush	Cable with M12 connector (5 pins)	Ring (Tritan)	35 V	24 V DC	82-665A.2114	341	112
	Blue	flush	Cable with M12 connector (5 pins)	Ring (Tritan)	35 V	24 V DC	82-665A.2124	341	112
	Green	flush	Cable with M12 connector (5 pins)	Ring (Tritan)	35 V	24 V DC	82-665A.2134	341	112
	White	flush	Cable with M12 connector (5 pins)	Ring (Tritan)	35 V	24 V DC	82-665A.2154	341	112

Wiring diagrams

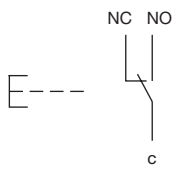

Wiring diagram 338

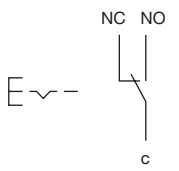

Wiring diagram 339

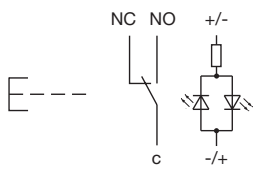

Wiring diagram 340

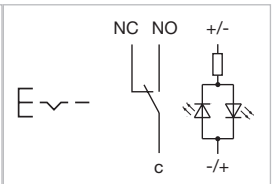

Wiring diagram 341

Component layouts

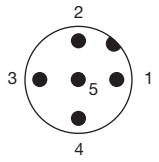

Component layout 112

1 = NC
2 = LED+
3 = Common
4 = LED-
5 = NO
A-Coded

82 Flush design

Pushbutton, illum. pushbutton with cable + M12 connector, 90°, Ø 22 mm, stainl. steel 316L, IP65, IP67

Product can differ from the current configuration.

General information

- The laser 2D-technology can mark all stainless steel versions with flat lenses - flush-mounting as well as raised versions.

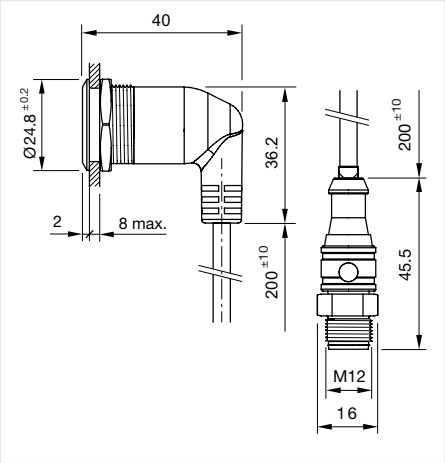

Dimensions [mm]

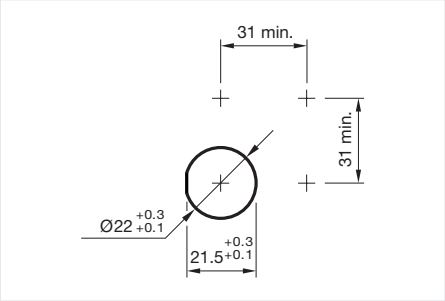

Mounting cut-outs [mm]

Equipment consisting of (schematic overview)

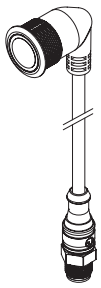

Actuator

Seal

Fixing nut

Each Part Number listed below includes all the black components shown in the 3D-drawing.

Pushbutton

Switching action	Lens shape	Terminal	Switching voltage	Part No.	Wiring diagram	Com-ponent Layout
Momentary	flush	Cable with M12 connector (5 pins)	35 V	82-665G.1000	338	112
Maintained	flush	Cable with M12 connector (5 pins)	35 V	82-665G.2000	339	112

Illuminated pushbutton

Switching action	Illumination colour	Lens shape	Terminal	Shape of illumi-nation	Switching voltage	Operating voltage LED	Part No.	Wiring diagram	Com-ponent Layout
Momentary	Red	flush	Cable with M12 connector (5 pins)	Ring (Tritan)	35 V	24 V DC	82-665G.1114	340	112
	Blue	flush	Cable with M12 connector (5 pins)	Ring (Tritan)	35 V	24 V DC	82-665G.1124	340	112
	Green	flush	Cable with M12 connector (5 pins)	Ring (Tritan)	35 V	24 V DC	82-665G.1134	340	112
	White	flush	Cable with M12 connector (5 pins)	Ring (Tritan)	35 V	24 V DC	82-665G.1154	340	112
Maintained	Red	flush	Cable with M12 connector (5 pins)	Ring (Tritan)	35 V	24 V DC	82-665G.2114	341	112
	Blue	flush	Cable with M12 connector (5 pins)	Ring (Tritan)	35 V	24 V DC	82-665G.2124	341	112
	Green	flush	Cable with M12 connector (5 pins)	Ring (Tritan)	35 V	24 V DC	82-665G.2134	341	112
	White	flush	Cable with M12 connector (5 pins)	Ring (Tritan)	35 V	24 V DC	82-665G.2154	341	112

Wiring diagrams

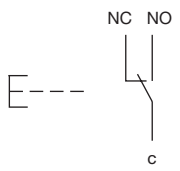

Wiring diagram 338

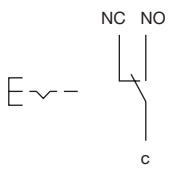

Wiring diagram 339

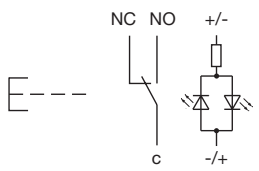

Wiring diagram 340

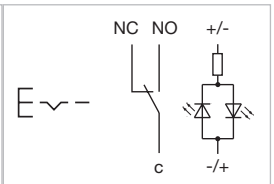

Wiring diagram 341

Component layouts

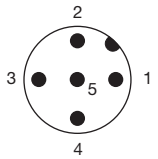

Component layout 112

1 = NC
2 = LED+
3 = Common
4 = LED-
5 = NO
A-Coded

82 Flush design

Pushbutton, illumuminated pushbutton with cable, Ø 22 mm, stainless steel 316L, IP65, IP67

Product can differ from the current configuration.

General information

- The laser 2D-technology can mark all stainless steel versions with flat lenses - flush-mounting as well as raised versions.
- Cable with certification ECE R118

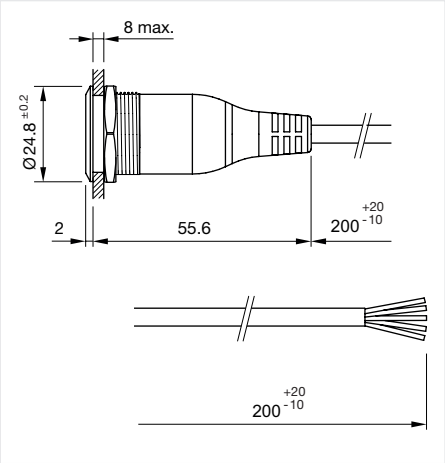

Dimensions [mm]

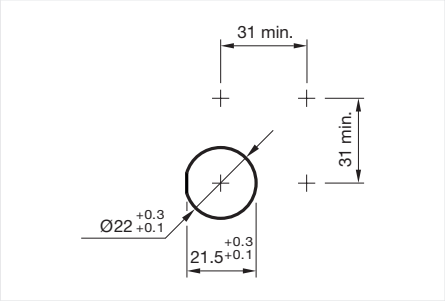

Mounting cut-outs [mm]

Equipment consisting of (schematic overview)

Actuator

Seal

Fixing nut

Each Part Number listed below includes all the black components shown in the 3D-drawing.

Pushbutton

Switching action	Lens shape	Terminal	Switching voltage	Part No.	Wiring diagram
Momentary	flush	Cable	35 V	82-6655.1000	338
Maintained	flush	Cable	35 V	82-6655.2000	339

Illuminated pushbutton

Switching action	Illumination colour	Lens shape	Terminal	Shape of illumination	Switching voltage	Operating voltage LED	Part No.	Wiring diagram
Momentary	Red	flush	Cable	Ring (Tritan)	35 V	24 V DC	82-6655.1114	340
	Blue	flush	Cable	Ring (Tritan)	35 V	24 V DC	82-6655.1124	340
	Green	flush	Cable	Ring (Tritan)	35 V	24 V DC	82-6655.1134	340
	White	flush	Cable	Ring (Tritan)	35 V	24 V DC	82-6655.1154	340
Maintained	Red	flush	Cable	Ring (Tritan)	35 V	24 V DC	82-6655.2114	341
	Blue	flush	Cable	Ring (Tritan)	35 V	24 V DC	82-6655.2124	341
	Green	flush	Cable	Ring (Tritan)	35 V	24 V DC	82-6655.2134	341
	White	flush	Cable	Ring (Tritan)	35 V	24 V DC	82-6655.2154	341

Wiring diagrams

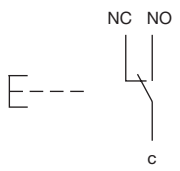

Wiring diagram 338

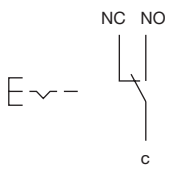

Wiring diagram 339

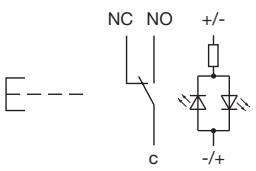

Wiring diagram 340

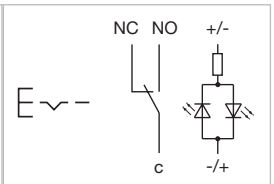

Wiring diagram 341

82 Flush design

Pushbutton, illumuminated pushbutton with cable, 90°, Ø 22 mm, stainless steel 316L, IP65, IP67

Product can differ from the current configuration.

General information

- The laser 2D-technology can mark all stainless steel versions with flat lenses - flush-mounting as well as raised versions.
- Cable with certification ECE R118

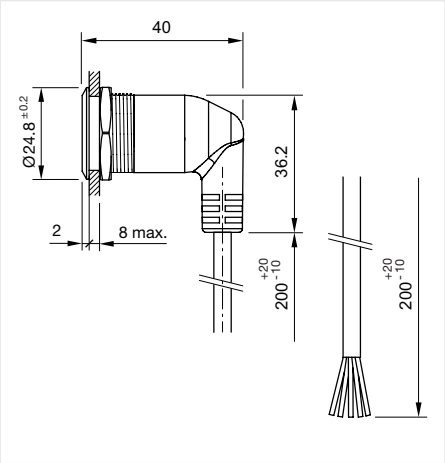

Dimensions [mm]

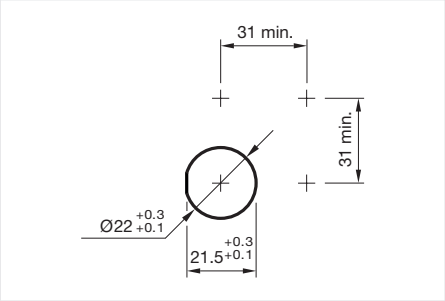

Mounting cut-outs [mm]

Equipment consisting of (schematic overview)

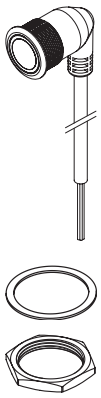

Each Part Number listed below includes all the black components shown in the 3D-drawing.

Pushbutton

Switching action	Lens shape	Terminal	Switching voltage	Part No.	Wiring diagram
Momentary	flush	Cable	35 V	82-665C.1000	338
Maintained	flush	Cable	35 V	82-665C.2000	339

Illuminated pushbutton

Switching action	Illumination colour	Lens shape	Terminal	Shape of illumination	Switching voltage	Operating voltage LED	Part No.	Wiring diagram
Momentary	Red	flush	Cable	Ring (Tritan)	35 V	24 V DC	82-665C.1114	340
	Blue	flush	Cable	Ring (Tritan)	35 V	24 V DC	82-665C.1124	340
	Green	flush	Cable	Ring (Tritan)	35 V	24 V DC	82-665C.1134	340
	White	flush	Cable	Ring (Tritan)	35 V	24 V DC	82-665C.1154	340
Maintained	Red	flush	Cable	Ring (Tritan)	35 V	24 V DC	82-665C.2114	341
	Blue	flush	Cable	Ring (Tritan)	35 V	24 V DC	82-665C.2124	341
	Green	flush	Cable	Ring (Tritan)	35 V	24 V DC	82-665C.2134	341
	White	flush	Cable	Ring (Tritan)	35 V	24 V DC	82-665C.2154	341

Wiring diagrams

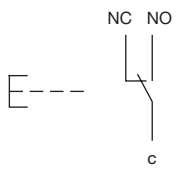

Wiring diagram 338

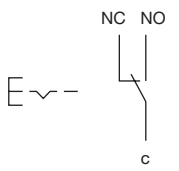

Wiring diagram 339

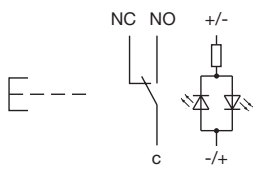

Wiring diagram 340

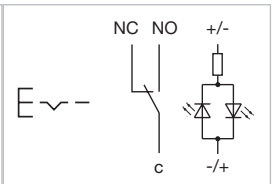

Wiring diagram 341

01
02
03
04
09
14
17
18
19
22
31
41
45
51
56
57
61
70
71
82
84
92
96

Indicator 19 mm, stainless steel 304, IP65, IP67

Product can differ from the current configuration.

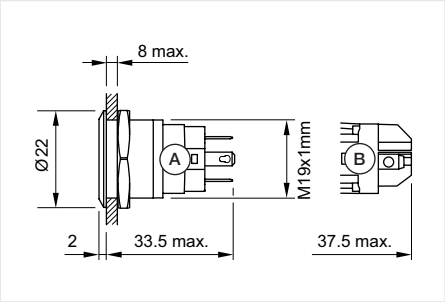

Dimensions [mm]
A = Solder terminal
B = Screw terminal

Equipment consisting of (schematic overview)

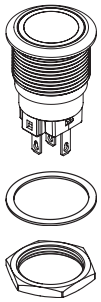

Each Part Number listed below includes all the black components shown in the 3D-drawing.

General information

- The laser 2D-technology can mark all stainless steel versions with flat lenses - flush-mounting as well as raised versions.

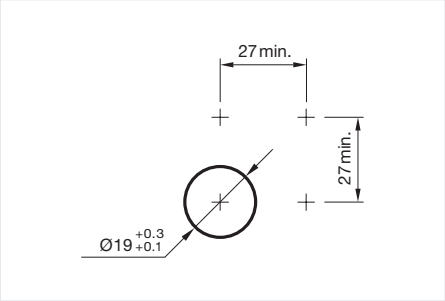

Mounting cut-outs [mm]

Indicator

Illumination colour	Shape of illumination	Lens shape	Operating voltage	Operation current	Terminal	Part No.	Wiring diagram	Component Layout
Red / Green	Dot	flush	24 V DC	7 mA	Screw terminal	82-5152.02A4	344	89
	Ring	flush	24 V DC	7 mA	Screw terminal	82-5152.01A4	344	89
	Dot	flush	24 V DC	7 mA	Soldering terminal	82-5151.02A4	344	86
	Ring	flush	24 V DC	7 mA	Soldering terminal	82-5151.01A4	344	86

Wiring diagrams

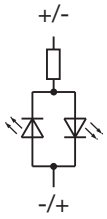

Wiring diagram 344

Component layouts

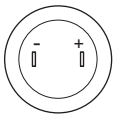

Component layout 86

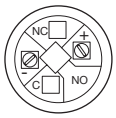

Component layout 89

01
02
03
04
09
14
17
18
19
22
31
41
45
51
56
57
61
70
71
82
84
92
96

Indicator 22 mm, stainless steel 304, IP65, IP67

Product can differ from the current configuration.

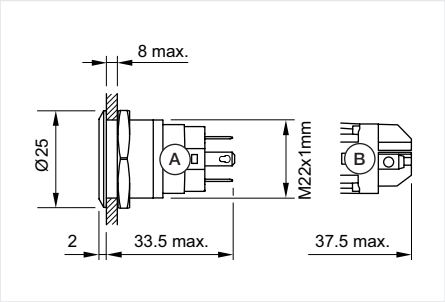

Dimensions [mm]
A = Solder terminal
B = Screw terminal

Equipment consisting of (schematic overview)

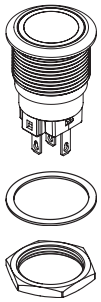

Each Part Number listed below includes all the black components shown in the 3D-drawing.

General information

- The laser 2D-technology can mark all stainless steel versions with flat lenses - flush-mounting as well as raised versions.

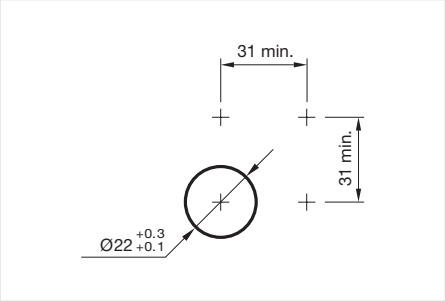

Mounting cut-outs [mm]

Indicator

Illumination colour	Shape of illumination	Lens shape	Operating voltage LED	Operation current LED	Terminal	Part No.	Wiring diagram	Com-ponent Layout
Red / Green	Dot	flush	24 V DC	7 mA	Screw terminal	82-6152.02A4	344	89
	Ring	flush	24 V DC	7 mA	Screw terminal	82-6152.01A4	344	89
	Dot	flush	24 V DC	7 mA	Soldering terminal	82-6151.02A4	344	86
	Ring	flush	24 V DC	7 mA	Soldering terminal	82-6151.01A4	344	86

Wiring diagrams

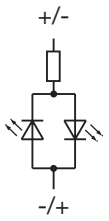

Wiring diagram 344

Component layouts

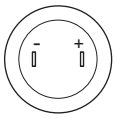

Component layout 86

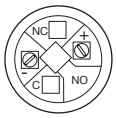

Component layout 89

01
02
03
04
09
14
17
18
19
22
31
41
45
51
56
57
61
70
71
82
84
92
96

Front side

Blind plug

Dimensions	Material	Part No.
Ø 16 mm	Stainless steel	82-907
Ø 19 mm	Stainless steel	82-908
Ø 22 mm	Stainless steel	82-909

Protective cap

Product attributes	Dimensions	Material	Colour	Optics	Part No.
For button Ø 19 mm	Ø 19 mm	Silicone	Colourless	transparent	82-911.1
For button Ø 22 mm	Ø 22 mm	Silicone	Colourless	transparent	82-912.1

Additional information

- Suitable for indicator, pushbutton and illuminated pushbutton with flush design and lens flat/level with front ring
- The exterior flush seal must be removed before mounting the protective cap
- Up to 300 000 actuations possible

Rear side

Flat receptacle

Product attributes	Material	Part No.
2.8 x 0.5 mm plug-in terminal	Metal	31-946

Insulation sleeve

Product attributes	Material	Part No.
For flat receptacle 2.8 mm	Plastic	31-929

On our website you can download technical data, assembly instructions, catalogs, brochures *and much more.*

www.eao.com

Your Expert Partner for Human Machine Interfaces

01
02
03
04
09
14
17
18
19
22
31
41
45
51
56
57
61
70
71
82
84
92
96

Mounting

Fixing nut

Dimensions	Material	Part No.
Ø 16 mm	Metal	82-901
Ø 19 mm	Metal	82-902
Ø 22 mm	Metal	82-903

Fixing nut 6-sides stainless steel

Dimensions	Material	Part No.
Ø 16 mm	Metal	82-916
Ø 19 mm	Metal	82-917
Ø 22 mm	Metal	82-918

Seal

Abmessungen	Material	Part No.
Ø 16 mm	Plastic	82-913
Ø 19 mm	Plastic	82-914
Ø 22 mm	Plastic	82-915

Mounting tool

Product attributes	Dimensions	Material	Part No.
For tightening or loosening of the fixing nut Ø 16 mm, for Part No. 82-901	Ø 16 mm	Metal	01-907
For tightening or loosening of the fixing nut Ø 19 mm, for Part No. 82-902	Ø 19 mm	Metal	82-905
For tightening or loosening of the fixing nut Ø 22 mm, for Part No. 82-903	Ø 22 mm	Metal	84-997

Indicator, Pushbutton, Illuminated pushbutton

Switching system

Snap-action changeover contact normally closed / normally open.
Switching function momentary or maintain.

Material

Housing
Stainless-steel
Aluminium natural anodized

Terminal housing
Plastic

Contact material
Silver alloy
Gold plated silver

Cable
M12 version 5 x 0.25 mm^2
Without connector 5 x 0.5 mm^2

Mechanical characteristics

Terminals
Plug-in terminal 2.8 mm x 0.5 mm
Screw terminal, Cable wire size min. 0.5 mm^2 / max. 1.5 mm^2
Connector M12, screw connection with A-coding
Cable 200 mm with M12 connector with A-coding
Cable 200 mm without connector

Tightening torque
0.5 Nm min. … 0.8 Nm max. for fixing nut Ø 16 mm
0.5 Nm min. … 1.2 Nm max. for fixing nut Ø 19 mm and Ø 22 mm
0.1 Nm for screw terminal
0.6 Nm max. for connector M12

Actuating force
4 … 7 N

Actuating travel
Approx. 3 mm

Mechanical lifetime

Pushbutton momentary	1 Mio. cycles of operation
Pushbutton maintain	500 000 cycles of operation

Resistance to heat of soldering
Hand-soldering max. 260 °C, 3 sec.

Electrical characteristics

Rated Operational Voltage U_e
250 VAC

Rated Insulation Voltage U_i
250 V

Illumination
LED red, green, blue, yellow and white
LED and series resistor with polarity protection are built in.

LED-Voltage	Tolerance	Current
6 VAC / DC	± 10 %	7 mA
12 VAC / DC	± 10 %	7 mA
24 VAC / DC	± 10 %	7 mA
110 VAC	± 10 %	2 mA
230 VAC	± 10 %	1.5 mA

Electrical life
50 000 cycles of operation

Switching voltage and switching current as per IEC 60947-5-1 (Silver contacts)
Service categorie AC-15

Voltage	Current	
24 VAC	1 A	
35 VAC	0.6 A	(M12 and cable version)
110 VAC	1 A	
220 VAC	0.5 A	

Switch rating DC service categorie DC-13 (Silver contacts)

Voltage	Current	
24 VDC	0.7 A	
35 VDC	1 A	(M12 and cable version)
110 VDC	0.2 A	
220 VDC	0.1 A	

Switching voltage and switching current as per UL 508 (Silver contacts)
cosφ 0.75 … 0.8)

Voltage	Current
120 VAC	5 A
240 VAC	3 A
24 VDC	1 A

Operational data
Silver contacts

	Minimum Values
Voltage	17 VAC/DC
Current	50 mA VAC/DC

Silver contacts gold-plated

	Minimum Values
Voltage	1 VAC/DC
Current	5 mA VAC/DC

82 Technical data

Thermal current I_{th}
5 A

Electrical strength
1500 VAC, 50 Hz 1 minute between life terminals and ground

Ambient conditions

Storage temperature
–40 °C … +80 °C

Operating temperature
–30 °C … +70 °C

Front protection
IP65 and IP67, as per IEC 60529

Impact resistance
IK10, as per IEC 62262

Shock resistance
Max. 500 m/s² as per IEC 60068-2-27

Degree of pollution
2, as per EN IEC 60947-1

Vibration resistance
10 … 500 Hz, amplitude 1.5 mm p-p according to IEC 60068-2-6

Climate resistance
Damp heat, 21 days as per EN 60068-2

Stainless steel and alumimium versions (without symbol):
Saline mist, 96 hours as per EN 60068-2-11

Brass versions (without symbol):
Saline mist, 24 hours as per EN 60068-2-11

Approvals

Approbations (without M12 versions)
CB
UL
C UL
CCC

Conformities
CE
2014/35/EC (LVD)
2011/65/EC (RoHS)

EAO reserves the right to alter specifications without further notice.

General notes

1. Laser marking
Using laser technology, the Series 82 stainless steel version can be marked with almost any symbol or text in any language.
Laser marking is very resistant, hardly fades and is exceptionally durable. These are the ideal characteristics of vandal-resistant indicators, pushbuttons and illuminated pushbuttons.

2. Versions
The laser 2D-technology can mark all stainless steel versions with flush lenses – flush-mounting as well as raised versions.

3. Symbols, colours
Basically, all symbols and texts can be marked in all languages.
Therefore, we need electronic DXF-file only. All symbols or texts are marked in anthracite/dark grey.

4. Part number
Each symbol is given a continuous number. It will be combined with the configured part number to get the complete part number, see overview part number system.

5. Standard symbols
Several standard icons are available:

On/Off	Standby	Light	Info	Bell	Door open	Door close
Part No. B001	Part No. B002	Part No. B003	Part No. B004	Part No. B005	Part No. B006	Part No. B007

Telephone	Hand control	Arrow right	Arrow left	Arrow up	Arrow down	Help
Part No. B008	Part No. B009	Part No. B010	Part No. B011	Part No. B012	Part No. B013	Part No. B014
						HELP

SOS	EIN	AUS	AUF	AB	ON	OFF
Part No. B015	Part No. B016	Part No. B017	Part No. B018	Part No. B019	Part No. B020	Part No. B021
SOS	EIN	AUS	AUF	AB	ON	OFF

UP	DOWN	START	STOP	AUTO	ENTER	RESET
Part No. B022	Part No. B023	Part No. B024	Part No. B025	Part No. B026	Part No. B027	Part No. B028
UP	DOWN	START	STOP	AUTO	ENTER	RESET

1	2	3	4	5	6	7
Part No. B029	Part No. B030	Part No. B031	Part No. B032	Part No. B033	Part No. B034	Part No. B035
1	2	3	4	5	6	7

8	9	0	*	#	+	–
Part No. B036	Part No. B037	Part No. B038	Part No. B039	Part No. B040	Part No. B041	Part No. B042
8	9	0	*	#	+	–

82 Order examples

Part number system

Series	–	Diameter		Material		Bezel/Lens		Connection/ SE Contacts		.	Switching action		Illumination		LED colour		LED voltage		.	Laser Engraving	
82		4	16 mm	1	Stainless steel	5	flush/ flat	1	Plug-in/ Silver		0	Indicator	0	no LED	0	no LED	0	no LED		B001	On/Off
		5	19 mm	5	Aluminium natural anodized	6	flush/ raised flat	2	Srew/ Silver		1	Momentary	1	Ring	1	red	2	6 VAC/DC		B002	Stand By
		6	22 mm			7	flush/ convex	3	Plug-in/ Gold plated		2	Maintained	2	Dot	2	blue	3	12 VAC/DC		B003	Light
								4	Screw/ Gold plated				A	Symbol illumination	3	green	4	24 VAC/DC		B004	Information
								5	Cable without connector, 180°/silver						4	yellow	5	110 VAC		B005	Bell
															5	white	6	230 VAC		B006	Door open
								7	M12 connector, integrated, silver						A	red/green bi-colour				BXXX	Any other symbol
								A	Cable with M12 connector, 180°/ silver												
								C	Cable without connector, 90°/silver												
								D	Cable with M12 connector, 90°/ silver												

Order example for pushbutton

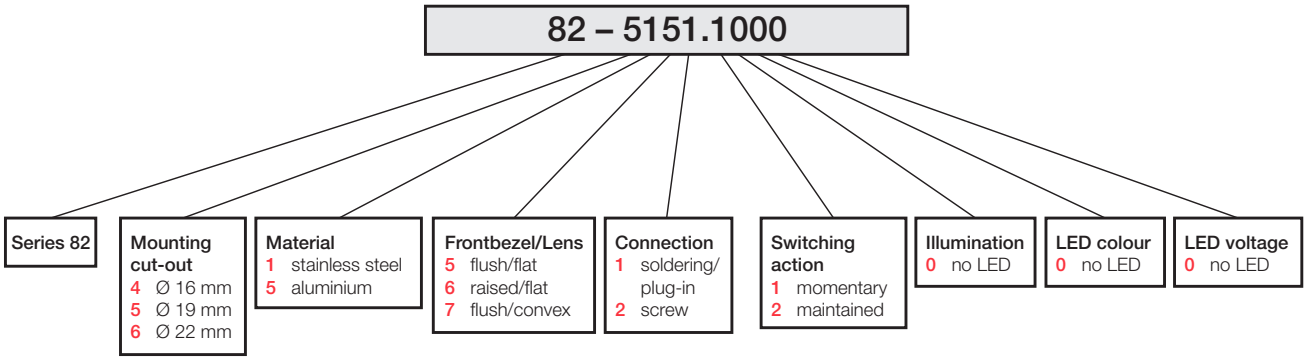

Order example for illuminated pushbutton ring illumination

82 – 6562.1124

- **Series 82**
- **Mounting cut-out**
  - 4 Ø 16 mm
  - 5 Ø 19 mm
  - 6 Ø 22 mm
- **Material**
  - 1 stainless steel
  - 5 aluminium
- **Frontbezel/Lens**
  - 5 flush/flat
  - 6 raised/flat
  - 7 flush/convex
- **Connection**
  - 1 soldering/ plug-in
  - 2 screw
- **Switching action**
  - 1 momentary
  - 2 maintained
- **Illumination**
  - 1 ring
  - 2 dot
- **LED colour**
  - 1 red
  - 2 blue
  - 3 green
  - 4 yellow
  - 5 white
  - A red/green
- **LED voltage**
  - 2 6 VAC/DC
  - 3 12 VAC/DC
  - 4 24 VAC/DC
  - 5 110 VAC
  - 6 230 VAC

Order example for illuminated pushbutton dot illumination

82 – 6352.1242

- **Series 82**
- **Mounting cut-out**
  - 4 Ø 16 mm
  - 5 Ø 19 mm
  - 6 Ø 22 mm
- **Material**
  - 1 stainless steel
  - 5 aluminium
- **Frontbezel/Lens**
  - 5 flush/flat
- **Connection**
  - 1 soldering/ plug-in
  - 2 screw
- **Switching action**
  - 1 momentary
  - 2 maintained
- **Illumination**
  - 1 ring
  - 2 dot
- **LED colour**
  - 1 red
  - 2 blue
  - 3 green
  - 4 yellow
  - 5 white
  - A red/green
- **LED voltage**
  - 2 6 VAC/DC
  - 3 12 VAC/DC
  - 4 24 VAC/DC
  - 5 110 VAC
  - 6 230 VAC

Order example for indicator with ring illumination

82 – 6161.0123

- **Series 82**
- **Mounting cut-out**
  - 4 Ø 16 mm
  - 5 Ø 19 mm
  - 6 Ø 22 mm
- **Material**
  - 1 stainless steel
  - 5 aluminium
- **Frontbezel/Lens**
  - 5 flush/flat
  - 6 raised/flat
  - 7 flush/convex
- **Connection**
  - 1 soldering/ plug-in
  - 2 screw
- **Switching action**
  - 0 no
- **Illumination**
  - 1 ring
  - 2 dot
- **LED colour**
  - 1 red
  - 2 blue
  - 3 green
  - 4 yellow
  - 5 white
  - A red/green
- **LED voltage**
  - 2 6 VAC/DC
  - 3 12 VAC/DC
  - 4 24 VAC/DC
  - 5 110 VAC
  - 6 230 VAC

Order example for indicator with dot illumination

82 – 6151.0224

- **Series 82**
- **Mounting cut-out**
  - 4 Ø 16 mm
  - 5 Ø 19 mm
  - 6 Ø 22 mm
- **Material**
  - 1 stainless steel
  - 5 aluminium
- **Frontbezel/Lens**
  - 5 flush/flat
- **Connection**
  - 1 soldering/ plug-in
  - 2 screw
- **Switching action**
  - 0 no
- **Illumination**
  - 1 ring
  - 2 dot
- **LED colour**
  - 1 red
  - 2 blue
  - 3 green
  - 4 yellow
  - 5 white
  - A red/green
- **LED voltage**
  - 2 6 VAC/DC
  - 3 12 VAC/DC
  - 4 24 VAC/DC
  - 5 110 VAC
  - 6 230 VAC

01
02
03
04
09
14
17
18
19
22
31
41
45
51
56
57
61
70
71
82
84
92
96

Suppressor circuits

When switching inductive loads such as relays, DC motors, and DC solenoids, it is always important to absorb surges (e. g. with a diode) to protect the contacts. When these inductive loads are switched off, a counter emf can severely damage switch contacts and greatly shorten lifetime.

Fig. 1 shows an inductive load with a free-wheeling diode connected in parallel. This free-wheeling diode provides a path for the inductor current to flow when the current is interrupted by the switch. Without this free-wheeling diode, the voltage across the coil will be limited only by dielectric breakdown voltages of the circuit or parasitic elements of the coil. This voltage can be kilovolts in amplitude even when nominal circuit voltages are low (e. g. 12 VDC) see Fig. 2.

The free-wheeling diode should be chosen so that the reverse breakdown voltage is greater than the voltage driving the inductive load. The DC blocking voltage (VR) of the free-wheeling diode can be found in the datasheet of a diode. The forward current should be equal or greater than the maximum current flowing through the load.

To get an efficient protection, the free-wheeling diode must be connected as close as possible to the inductive load!

Switching with inductive load
Fig. 1

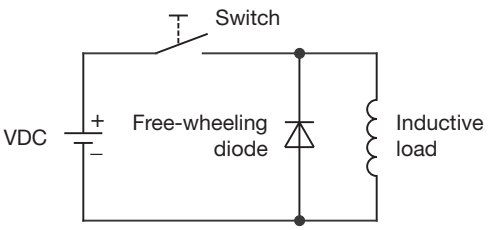

Counter EMF
over load without free-wheeling diode
Fig. 2

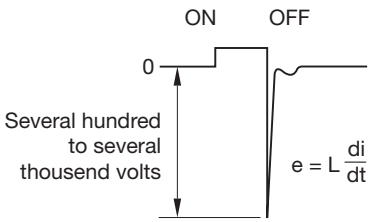

Earthing reuired for applications from 60 V AC / DC

For applications with an operating voltage from 60 V AC / DC upwards, metal panels and metal buttons must be permanetly earhed with an earth conductor (1,5 mm²) with yellow and green sheathing.

Part No.	Page
01-907	36
31-929	35
31-946	35
82-5151.01A4	30
82-5151.02A4	30
82-5151.1000	4
82-5151.1000.B001	4
82-5151.1000.B002	4
82-5151.1000.B003	4
82-5151.1000.B004	4
82-5151.1000.B005	4
82-5151.1000.B006	4
82-5151.1114	8
82-5151.1124	8
82-5151.1134	8
82-5151.1144	8
82-5151.1154	8
82-5151.11A4	9
82-5151.12A4	9
82-5151.2000	4
82-5151.2000.B001	4
82-5151.2000.B002	4
82-5151.2000.B003	4
82-5151.2000.B004	4
82-5151.2000.B005	4
82-5151.2000.B006	4
82-5151.2114	8
82-5151.2124	8
82-5151.2134	8
82-5151.2144	8
82-5151.2154	8
82-5151.21A4	9
82-5151.22A4	9
82-5152.01A4	30
82-5152.02A4	30
82-5152.1000	4
82-5152.1000.B001	4
82-5152.1000.B002	4
82-5152.1000.B003	4
82-5152.1000.B004	4
82-5152.1000.B005	4
82-5152.1000.B006	4
82-5152.1114	8
82-5152.1124	8
82-5152.1134	8
82-5152.1144	8
82-5152.1154	8
82-5152.11A4	9
82-5152.12A4	9
82-5152.2000	4
82-5152.2000.B001	4
82-5152.2000.B002	4
82-5152.2000.B003	4
82-5152.2000.B004	4
82-5152.2000.B005	4
82-5152.2000.B006	4
82-5152.2114	8
82-5152.2124	8
82-5152.2134	8
82-5152.2144	8
82-5152.2154	8
82-5152.21A4	9
82-5152.22A4	9
82-5153.1000	6
82-5153.1000.B001	6
82-5153.1000.B002	6
82-5153.1000.B003	6
82-5153.1000.B004	6
82-5153.1000.B005	6
82-5153.1000.B006	6
82-5153.1114	10
82-5153.1124	10
82-5153.1134	10
82-5153.1144	10
82-5153.1154	10
82-5153.11A4	11
82-5153.12A4	11
82-5153.2000	6
82-5153.2000.B001	6
82-5153.2000.B002	6
82-5153.2000.B003	6
82-5153.2000.B004	6
82-5153.2000.B005	6
82-5153.2000.B006	6
82-5153.2114	10
82-5153.2124	10
82-5153.2134	10
82-5153.2144	10
82-5153.2154	10
82-5153.21A4	11
82-5153.22A4	11
82-5154.1000	6
82-5154.1000.B001	6
82-5154.1000.B002	6
82-5154.1000.B003	6
82-5154.1000.B004	6
82-5154.1000.B005	6
82-5154.1000.B006	6
82-5154.1114	10
82-5154.1124	10
82-5154.1134	10
82-5154.1144	10
82-5154.1154	10
82-5154.11A4	11
82-5154.12A4	11
82-5154.2000	6
82-5154.2000.B001	6
82-5154.2000.B002	6
82-5154.2000.B003	6
82-5154.2000.B004	6
82-5154.2000.B005	6
82-5154.2000.B006	6
82-5154.2114	10
82-5154.2124	10
82-5154.2134	10
82-5154.2144	10
82-5154.21A4	11
82-5154.22A4	10
82-6151.01A4	32
82-6151.02A4	32
82-6151.11A4	12
82-6151.12A4	12
82-6151.1A14.B001	16
82-6151.1A14.B002	16
82-6151.1A14.B006	16
82-6151.1A14.B015	16
82-6151.1A24.B004	16
82-6151.1A24.B006	16
82-6151.1A24.B015	16
82-6151.1A34.B001	16
82-6151.1A34.B002	16
82-6151.1A34.B006	16
82-6151.1A54.B004	16
82-6151.1A54.B015	16
82-6151.1AA4.B001	16
82-6151.1AA4.B002	16
82-6151.1AA4.B004	16
82-6151.1AA4.B006	16
82-6151.1AA4.B015	16
82-6151.21A4	12
82-6151.22A4	12
82-6151.2A14.B001	16
82-6151.2A34.B001	16
82-6151.2AA4.B001	16
82-6152.01A4	32
82-6152.02A4	32
82-6152.11A4	12
82-6152.12A4	12
82-6152.21A4	12
82-6152.22A4	12
82-6153.11A4	14
82-6153.12A4	14
82-6153.21A4	14
82-6153.22A4	14
82-6154.11A4	14
82-6154.12A4	14
82-6154.2154	14
82-6154.21A4	14
82-6154.22A4	14
82-6651.1000	18
82-6651.1114	18
82-6651.1124	18
82-6651.1134	18
82-6651.1154	18
82-6651.2000	18
82-6651.2114	18
82-6651.2124	18
82-6651.2134	18
82-6651.2154	18
82-6655.1000	26
82-6655.1114	26
82-6655.1124	26
82-6655.1134	26
82-6655.1154	26
82-6655.2000	26
82-6655.2114	26
82-6655.2124	26
82-6655.2134	26
82-6655.2154	26
82-6657.1000	20
82-6657.1114	20
82-6657.1124	20
82-6657.1134	20
82-6657.1154	20
82-6657.2000	20
82-6657.2114	20
82-6657.2124	20
82-6657.2134	20
82-6657.2154	20
82-665A.1000	22
82-665A.1114	22
82-665A.1124	22
82-665A.1134	22
82-665A.1154	22
82-665A.2000	22
82-665A.2114	22
82-665A.2124	22
82-665A.2134	22
82-665A.2154	22
82-665C.1000	28
82-665C.1114	28
82-665C.1124	28
82-665C.1134	28
82-665C.1154	28
82-665C.2000	28
82-665C.2114	28
82-665C.2124	28
82-665C.2134	28
82-665C.2154	28
82-665G.1000	24
82-665G.1114	24
82-665G.1124	24
82-665G.1134	24
82-665G.1154	24
82-665G.2000	24
82-665G.2114	24
82-665G.2124	24
82-665G.2134	24
82-665G.2154	24
82-901	36
82-902	36
82-903	36
82-905	36
82-907	34
82-908	34
82-909	34
82-911.1	34
82-912.1	34
82-913	36
82-914	36
82-915	36
82-916	36
82-917	36
82-918	36
84-997	36