R76, Double Metallized Polypropylene Film, Radial, DC and Pulse Applications (Automotive Grade)

Overview

The R76 series is constructed of polypropylene film and double metallized polyester film as electrodes with radial leads of tinned wire. The radial leads are electrically welded to the metal layer on the ends of the capacitor winding. The capacitor is encapsulated in a self-extinguishing solvent resistant plastic case with thermosetting resin material meeting UL 94 V–0 requirements. Two different winding constructions are used depending on voltage parameters. Please see the Performance Characteristics for more information.

Automotive grade devices (up to lead spacing 22.5 mm) meet the demanding Automotive Electronics Council's AEC–Q200 qualification requirements.

Applications

Typical applications include resonant circuit, high frequency high current, snubber and silicon-controlled rectifier (SCR and IGBT) and SiC (e.g. MOSFET) commutation circuits as well as applications with high voltage and high current.

Not suitable for across-the-line application (see Suppressor Capacitors).

Benefits

- Voltage range: 250 – 2,000 VDC
- Capacitance range: 100 pF – 12 µF
- Lead Spacing: 7.5 mm – 37.5 mm
- Capacitance tolerance: ±2.5%, ±5%, ±10%
- Climatic category: 55/110/56 IEC 60068–1
- Operating temperature range of −55°C to +110°C
- RoHS compliance and lead-free terminations
- Tape & Reel packaging in accordance with IEC 60286–2
- Self-healing
- Automotive (AEC–Q200) grade up to lead spacing 22.5 mm

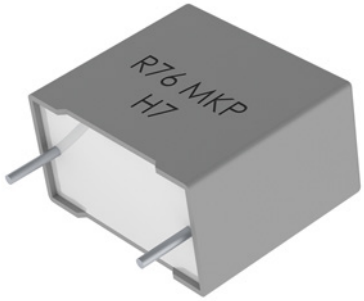

Part Number System

R76	I	D	1680	SE	30		K
Series	Rated Voltage (VDC)	Lead Spacing (mm)	Capacitance Code (pF)	Packaging	Internal Use		Capacitance Tolerance
Double Metallized Polypropylene	I = 250 M = 400 P = 630 Q = 1,000 T = 1,600 U = 2,000	D = 7.5 F = 10 I = 15 N = 22.5 R = 27.5 W = 37.5	The last three digits represent significant figures. The first digit specifies the total number of zeros to be added.	See Ordering Options Table	00 10 20 30 40	50 60 70 80 L0	H = ±2.5% (*) J = ±5% K = ±10% (*) = for C ≥ 1,000 pF

© KEMET Electronics Corporation • One East Broward Boulevard
Fort Lauderdale, FL 33301 USA • 954-766-2800 • www.kemet.com

Ordering Options Table

Lead Spacing Nominal (mm)	Type of Leads and Packaging	Lead Length (mm)	Lead and Packaging Code
7.5	**Standard Lead and Packaging Options**		
	Bulk – Short Leads	4 +2/−0	SE
	Ammo Pack	H_0 = 18.5±0.5	DQ
	Other Lead and Packaging Options		
	Tape & Reel (Standard Reel Ø 355 mm)	H_0 = 18.5±0.5	CK
	Bulk – Short Leads	2.7 +0.5/−0	JA
	Bulk – Short Leads	3.5 +0.5/−0	JB
	Bulk – Short Leads	4.0 +0.5/−0	JE
	Bulk – Short Leads	3.2 +0.3/−0.2	JH
	Bulk – Long Leads	18±1	JM
	Bulk – Long Leads	17 +1/−2	Z3
10 15 22.5	**Standard Lead and Packaging Options**		
	Bulk (Bag) – Short Leads	4 +2/−0	SE
	Ammo Pack	H_0 = 18.5±0.5	DQ
	Other Lead and Packaging Options		
	Tape & Reel (Standard Reel Ø 355 mm)	H_0 = 18.5±0.5	GY
	Tape & Reel (Large Reel Ø 500 mm)	H_0 = 18.5±0.5	CK
	Bulk (Bag) – Short Leads	2.7 +0.5/−0	JA
	Bulk (Bag) – Short Leads	3.5 +0.5/−0	JB
	Bulk (Bag) – Short Leads	10±1	JC
	Bulk (Bag) – Short Leads	4.0 +0.5/−0	JE
	Bulk (Bag) – Short Leads	3.2 +0.3/−0.2	JH
	Bulk (Bag) – Long Leads	18±1	JM
	Bulk (Bag) – Long Leads	30 +5/−0	40
	Bulk (Bag) – Long Leads	25 +2/−1	50
27.5	**Standard Lead and Packaging Options**		
	Bulk (Tray) – Short Leads	4 +2/−0	SE
	Other Lead and Packaging Options		
	Tape & Reel (Standard Reel Ø 355 mm)	H_0 = 18.5±0.5	GY
	Tape & Reel (Large Reel Ø 500 mm)	H_0 = 18.5±0.5	CK[1]
	Bulk (Tray) – Short Leads	3.5 +0.5/−0	JB
	Bulk (Tray) – Short Leads	4.0 +0.5/−0	JE
	Bulk (Tray) – Short Leads	3.2 +0.3/−0.2	JH
	Bulk (Tray) – Long Leads	30 +5/−0	40
	Bulk (Tray) – Long Leads	25 +2/−1	50

[1] = Not for all sizes, see "Packaging Quantities" table.

Ordering Options Table cont.

Lead Spacing Nominal (mm)	Type of Leads and Packaging	Lead Length (mm)	Lead and Packaging Code
37.5	**Standard Lead and Packaging Options**		
	Bulk (Tray) – Short Leads	4 +2/−0	SE
	Other Lead and Packaging Options		
	Bulk (Tray) – Short Leads	3.5 +0.5/−0	JB
	Bulk (Tray) – Short Leads	4.0 +0.5/−0	JE
	Bulk (Tray) – Short Leads	3.2 +0.3/−0.2	JH
	Bulk (Tray) – Long Leads	30 +5/−0	40
	Bulk (Tray) – Long Leads	25 +2/−1	50

Dimensions – Millimeters

Loose

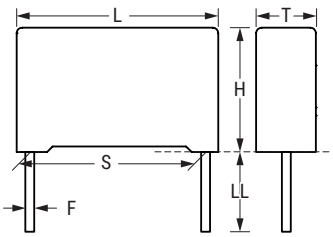

Taped

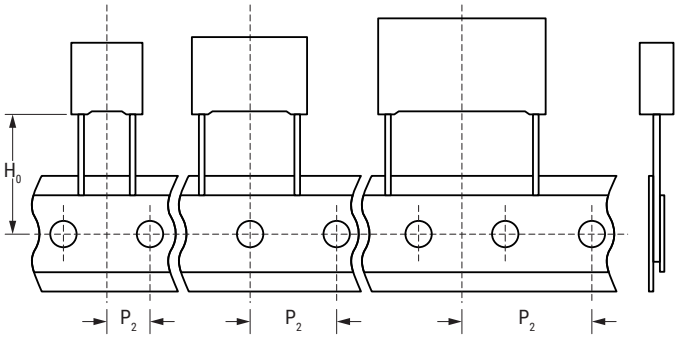

S		T		H		L		F	
Nominal	Tolerance	Nominal	Tolerance	Nominal	Tolerance	Nominal	Tolerance	Nominal	Tolerance
7.5	±0.4	3.0	+0.1/−0.5	8.0	+0.1/−0.5	10.0	+0.2/−0.5	0.5	±0.05
7.5	±0.4	4.0	+0.1/−0.5	9.0	+0.1/−0.5	10.0	+0.2/−0.5	0.6	±0.05
7.5	±0.4	5.0	+0.1/−0.5	10.5	+0.1/−0.5	10.0	+0.2/−0.5	0.6	±0.05
7.5	±0.4	6.0	+0.1/−0.5	12.0	+0.1/−0.5	10.5	+0.2/−0.5	0.6	±0.05
10.0	±0.4	4.0	+0.2/−0.5	9.0	+0.1/−0.5	13.0	+0.2/−0.5	0.6	±0.05
10.0	±0.4	5.0	+0.2/−0.5	11.0	+0.1/−0.5	13.0	+0.2/−0.5	0.6	±0.05
10.0	±0.4	6.0	+0.2/−0.5	12.0	+0.1/−0.5	13.0	+0.2/−0.5	0.6	±0.05
15.0	±0.4	4.0	+0.2/−0.5	10.0	+0.1/−0.5	18.0	+0.3/−0.5	0.8	±0.05
15.0	±0.4	5.0	+0.2/−0.5	11.0	+0.1/−0.5	18.0	+0.3/−0.5	0.8	±0.05
15.0	±0.4	6.0	+0.2/−0.5	12.0	+0.1/−0.5	18.0	+0.3/−0.5	0.8	±0.05
15.0	±0.4	7.5	+0.2/−0.5	13.5	+0.1/−0.5	18.0	+0.5/−0.5	0.8	±0.05
15.0	±0.4	8.5	+0.2/−0.5	14.5	+0.1/−0.5	18.0	+0.5/−0.5	0.8	±0.05
15.0	±0.4	9.0	+0.2/−0.5	12.5	+0.1/−0.5	18.0	+0.5/−0.5	0.8	±0.05
15.0	±0.4	10.0	+0.2/−0.5	16.0	+0.1/−0.5	18.0	+0.5/−0.5	0.8	±0.05
Note: See Ordering Options Table for lead length (LL/Ho) options.									

Dimensions – Millimeters cont.

Loose

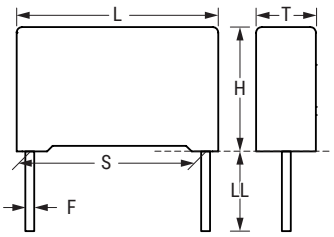

Taped

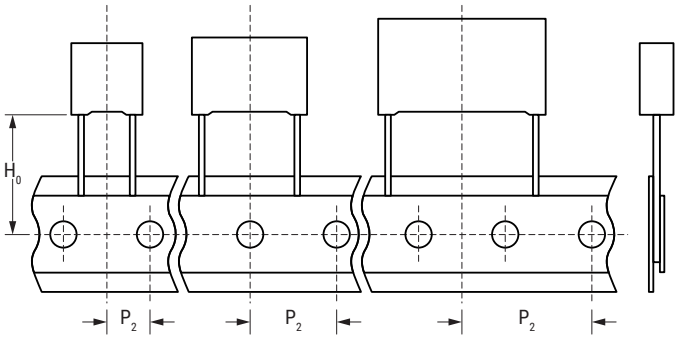

S		T		H		L		F	
Nominal	Tolerance	Nominal	Tolerance	Nominal	Tolerance	Nominal	Tolerance	Nominal	Tolerance
15.0	±0.4	11.0	+0.2/−0.5	19.0	+0.1/−0.5	18.0	+0.5/−0.5	0.8	±0.05
15.0	±0.4	13.0	+0.2/−0.5	12.0	+0.1/−0.5	18.0	+0.5/−0.5	0.8	±0.05
22.5	±0.4	6.0	+0.2/−0.5	15.0	+0.1/−0.5	26.5	+0.3/−0.5	0.8	±0.05
22.5	±0.4	7.0	+0.2/−0.5	16.0	+0.1/−0.5	26.5	+0.3/−0.5	0.8	±0.05
22.5	±0.4	8.5	+0.2/−0.5	17.0	+0.1/−0.5	26.5	+0.3/−0.5	0.8	±0.05
22.5	±0.4	10.0	+0.2/−0.5	18.5	+0.1/−0.5	26.5	+0.3/−0.5	0.8	±0.05
22.5	±0.4	11.0	+0.2/−0.5	20.0	+0.1/−0.5	26.5	+0.3/−0.5	0.8	±0.05
22.5	±0.4	13.0	+0.2/−0.5	22.0	+0.1/−0.5	26.5	+0.3/−0.5	0.8	±0.05
22.5	±0.4	14.5	+0.2/−0.5	29.5	+0.1/−0.5	26.5	+0.3/−0.5	0.8	±0.05
27.5	±0.4	9.0	+0.2/−0.7	17.0	+0.1/−0.7	32.0	+0.3/−0.7	0.8	±0.05
27.5	±0.4	11.0	+0.2/−0.7	20.0	+0.1/−0.7	32.0	+0.3/−0.7	0.8	±0.05
27.5	±0.4	13.0	+0.2/−0.7	22.0	+0.1/−0.7	32.0	+0.3/−0.7	0.8	±0.05
27.5	±0.4	13.0	+0.2/−0.7	25.0	+0.1/−0.7	32.0	+0.3/−0.7	0.8	±0.05
27.5	±0.4	14.0	+0.2/−0.7	28.0	+0.1/−0.7	32.0	+0.3/−0.7	0.8	±0.05
27.5	±0.4	16.0	+0.2/−0.7	30.0	+0.1/−0.7	32.0	+0.3/−0.7	0.8	±0.05
27.5	±0.4	18.0	+0.2/−0.7	33.0	+0.1/−0.7	32.0	+0.3/−0.7	0.8	±0.05
27.5	±0.4	22.0	+0.2/−0.7	37.0	+0.1/−0.7	32.0	+0.3/−0.7	0.8	±0.05
27.5	±0.4	24.0	+0.2/−0.7	15.0	+0.1/−0.7	32.0	+0.3/−0.7	0.8	±0.05
37.5	±0.4	11.0	+0.3/−0.7	22.0	+0.1/−0.7	41.5	+0.3/−0.7	1.0	±0.05
37.5	±0.4	13.0	+0.3/−0.7	24.0	+0.1/−0.7	41.5	+0.3/−0.7	1.0	±0.05
37.5	±0.4	16.0	+0.3/−0.7	28.5	+0.1/−0.7	41.5	+0.3/−0.7	1.0	±0.05
37.5	±0.4	19.0	+0.3/−0.7	32.0	+0.1/−0.7	41.5	+0.3/−0.7	1.0	±0.05
37.5	±0.4	20.0	+0.3/−0.7	40.0	+0.1/−0.7	41.5	+0.3/−0.7	1.0	±0.05
37.5	±0.4	24.0	+0.3/−0.7	44.0	+0.1/−0.7	41.5	+0.3/−0.7	1.0	±0.05
37.5	±0.4	24.0	+0.3/−0.7	15.0	+0.1/−0.7	41.5	+0.3/−0.7	1.0	±0.05
37.5	±0.4	24.0	+0.3/−0.7	19.0	+0.1/−0.7	41.5	+0.3/−0.7	1.0	±0.05
37.5	±0.4	30.0	+0.3/−0.7	45.0	+0.1/−0.7	41.5	+0.3/−0.7	1.0	±0.05

Note: See Ordering Options Table for lead length (LL/Ho) options.

Performance Characteristics

Dielectric	Polypropylene film							
Plates	Double sided metallized polyester film							
Winding	Non-inductive type							
Leads	Tinned wire							
Protection	Plastic case, thermosetting resin filled. Box material is solvent resistant and flame retardant according to UL94.							
Related Documents	IEC 60384–16							
Sections	1			2				
Rated Voltage V_R	250 VDC 180 VAC	400 VDC 250 VAC	630 VDC 250 VAC	630 VDC 400 VAC	1,000 VDC 400 VAC	1,000 VDC 600 VAC	1,600 VDC 650 VAC	2,000 VDC 700 VAC
Capacitance Range (µF)	0.0068– 12	0.0027 – 8.2	0.00068 – 0.012	0.0039 – 3.9	0.00022 – 0.0033	0.00047 – 2.2	0.0022 – 1.2	0.0001 – 0.56
Capacitance Values	E12 series (IEC 60063) measured at 1 kHz and +20±1°C							
Capacitance Tolerance	±2.5%, ±5%, ±10%							
Operating Temperature Range	−55°C to +110°C							
Rated Temperature T_R	+85°C for V_R (DC and AC)							
Voltage Derating	The following decreasing factor has to be applied on the rated voltage: +85°C to +110°C: 1.25% per °C for V_R (DC and AC)							
Climatic Category	55/110/56 IEC 60068–1							
Storage Conditions	Storage time: ≤ 24 months from the date marked on the label package							
	Average relative humidity per year ≤ 70%							
	RH ≤ 85% for 30 days randomly distributed throughout the year							
	Dew is absent							
	Temperature: −40 to 80°C (see "Maximum Humidity in Storage Conditions" graph below)							
Test Voltage	1.6 x V_R VDC for 2 seconds (between terminations) at +25°C ±5°C							
Capacitance Drift	Maximum 0.5% after a 2 year storage period at a temperature of +10°C to +40°C and a relative humidity of 40% to 60%							
Maximum Pulse Steepness	dV/dt according to Table 1. For working voltages lower than rated voltage ($V < V_R$), the specified dV/dt can be multiplied by the factor V_R/V.							
Reliability (Reference IEC 61709)	Operational life > 200,000 hours at 85°C							
	Failure rate ≤ 1 FIT, T = +40°C, V = 0.5 x V_R							
	Failure criteria: open or short circuit, cap. change > 10%, DF 2 times the catalog limits, IR < 0.005 x initial limit							
Temperature Coefficient	−(200±100) ppm/°C at 1 kHz							
Self-Inductance (Lead Length ~ 2 mm)	Lead Spacing (mm)	7.5	10	15	22.5	27.5	37.5	
	L (nH) ≈	8	9	10	16	18	20	
	Max 1 nH per 1 mm lead and capacitor length							

Performance Characteristics cont.

Dissipation Factor tanδ	Measured at 25°C ±5°C			
	Frequency	C ≤ 0.1 µF	0.1 µF < C ≤ 1.0 µF	C > 1µF
	1 kHz	≤ 0.03%	≤ 0.03%	≤ 0.04%
	10 kHz	≤ 0.04%	≤ 0.06%	–
	100 kHz	≤ 0.10%	–	–

Insulation Resistance	Measured at +25°C, 100 VDC 60 seconds	
	Minimum Values Between Terminals	
	C ≤ 0.33 µF	C > 0.33 µF
	≥ 100,000 MΩ (≥ 500,000 MΩ)*	≥ 30,000 MΩ • µF (≥ 150,000 MΩ • µF)*

** Typical value*

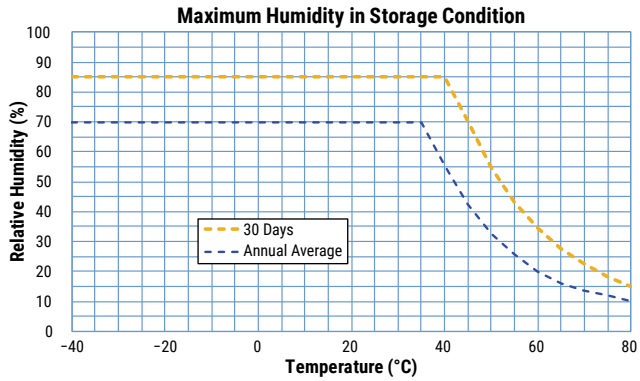

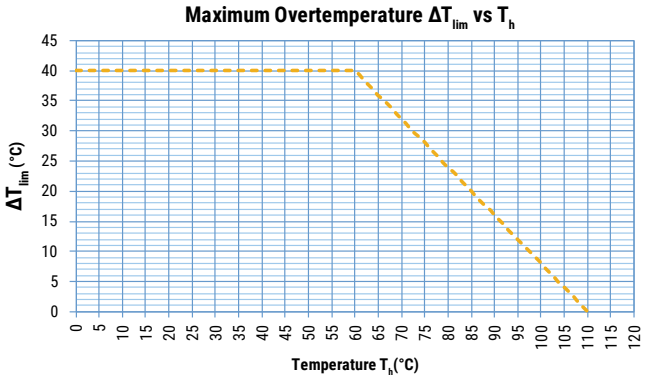

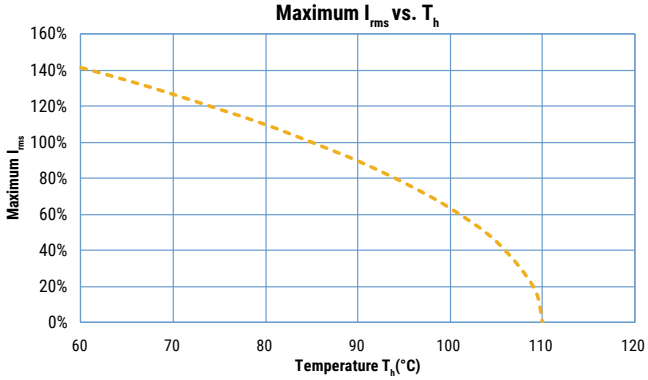

T_h is the maximum ambient temperature surrounding the capacitor or hottest contact point (e.g. tracks), whichever is higher, in the worst operation conditions in °C.

Qualification

Automotive Grade products meet or exceed the requirements outlined by the Automotive Electronics Council. Details regarding test methods and conditions are referenced in document AEC–Q200, Stress Test Qualification for Passive Components. For additional information regarding the Automotive Electronics Council and AEC–Q200, please visit their website at www.aecouncil.com.

Maximum Voltage (V_{rms}) Versus Frequency (Sinusoidal Waveform/Th ≤ 85°C)

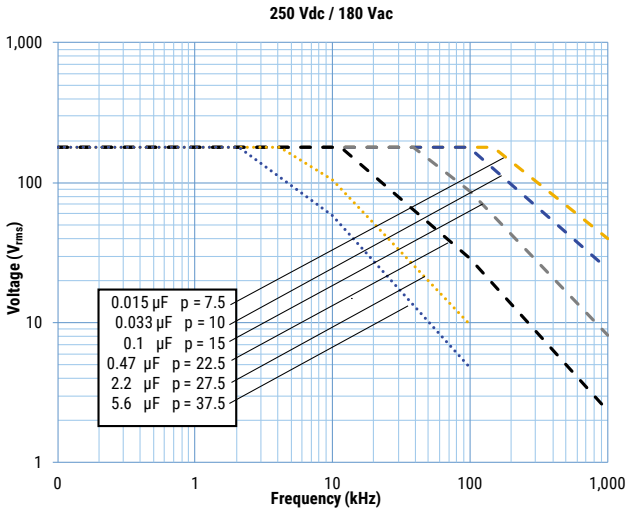

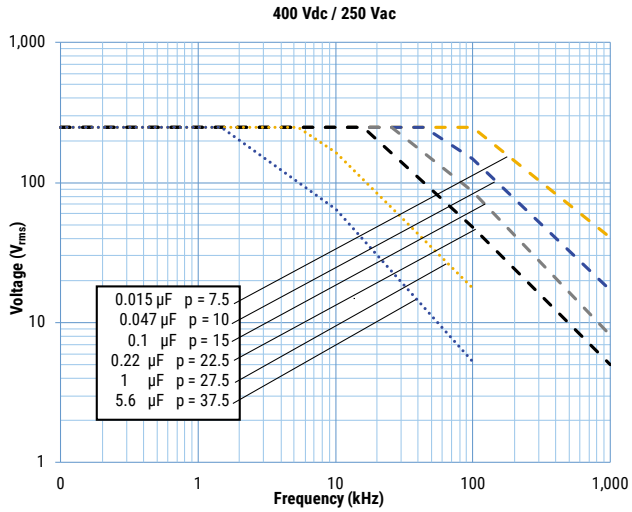

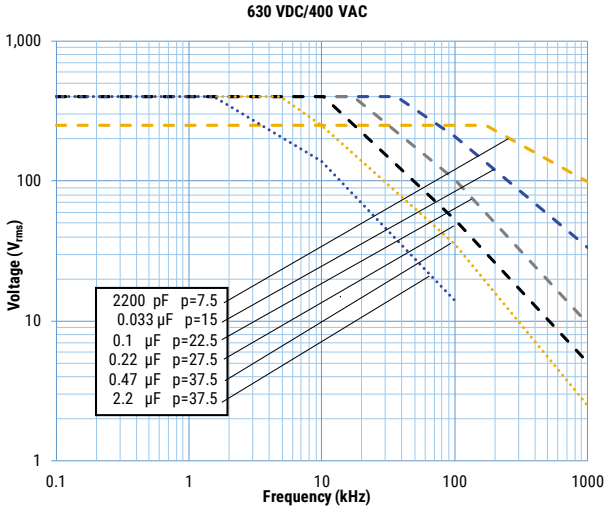

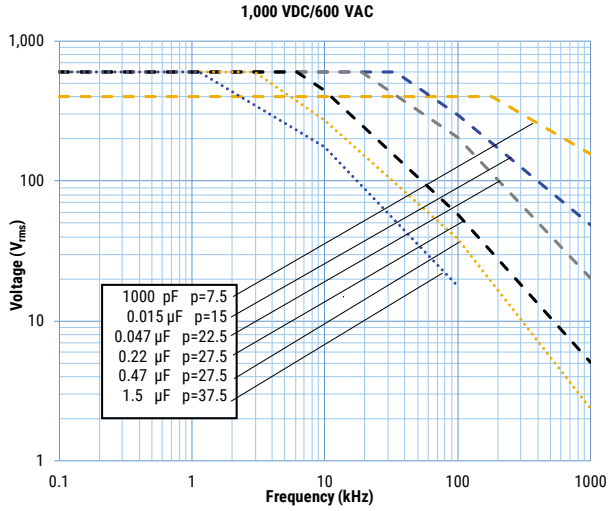

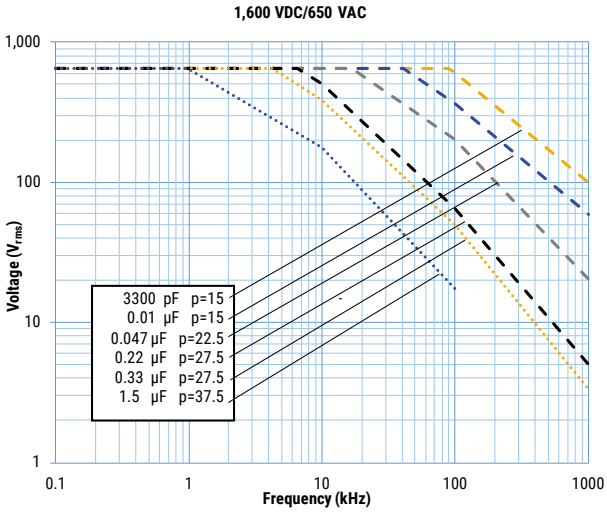

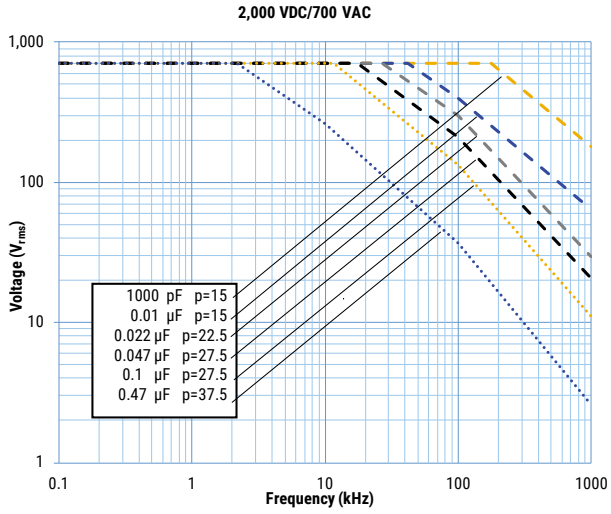

Maximum Current (I_{rms}) Versus Frequency (Sinusoidal Waveform/Th ≤ 85°C)

250 Vdc / 180 Vac

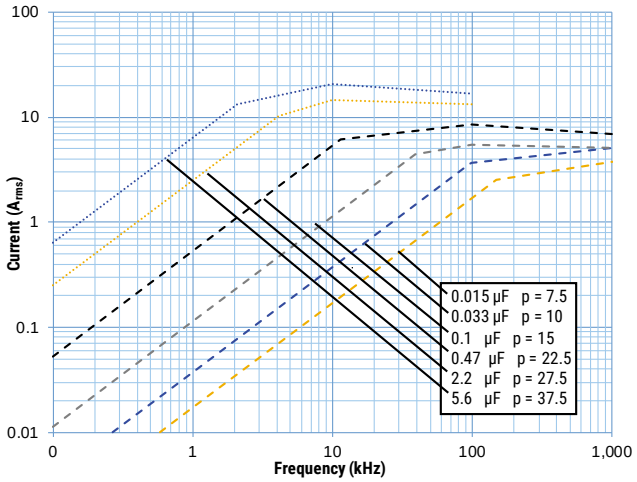

400 Vdc / 250 Vac

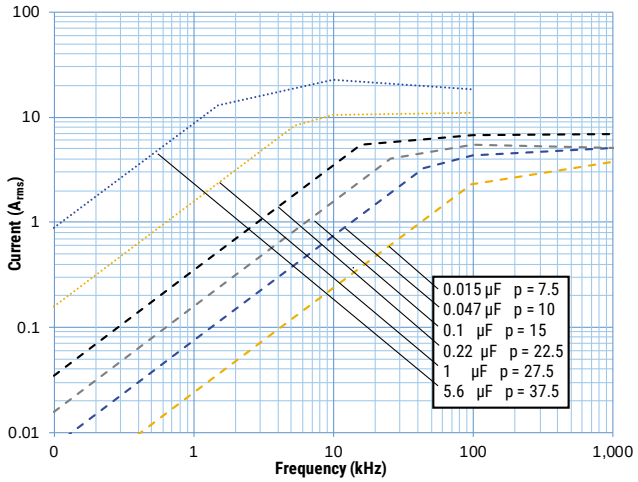

630 VDC/400 VAC

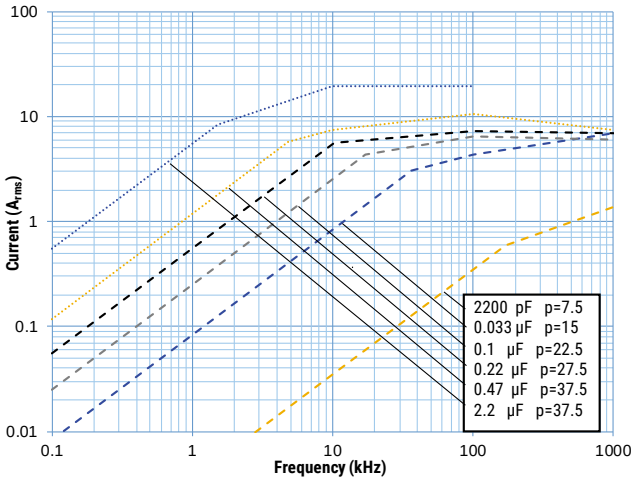

1,000 VDC/600 VAC

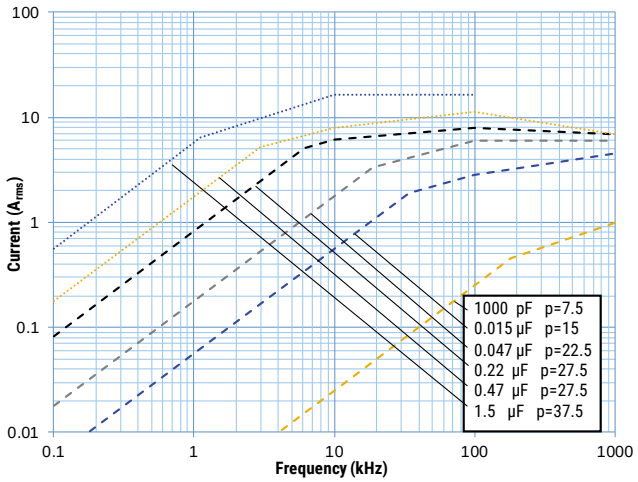

1,600 VDC/650 VAC

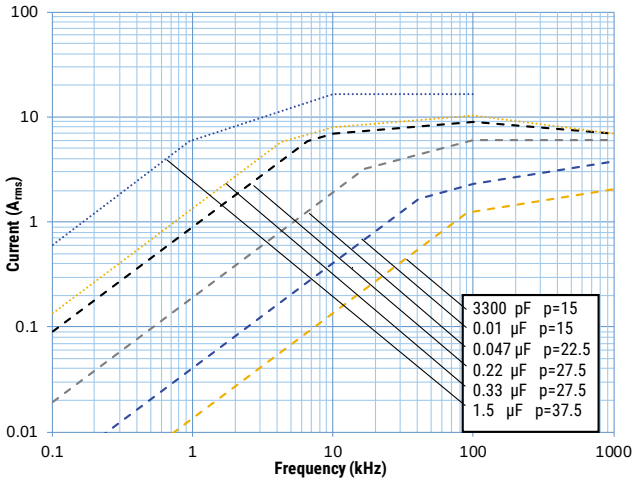

2,000 VDC/700 VAC

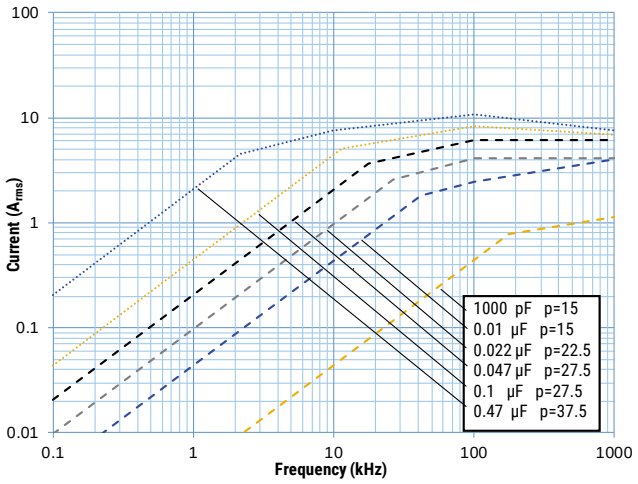

Environmental Test Data

Damp Heat, Steady State Test	Test Conditions:		Performances
	Temperature: Relative humidity (RH): Test duration:	+40°C ±2°C 93% ±2% 56 days	|Δ C/C| ≤ 2%, Δ tanδ ≤ 0.001 at 1 kHz IR after test ≥ 50% of initial limit
Endurance Test	**Test Conditions**		**Performances**
	Temperature: Voltage applied: Test duration:	+85°C ±2°C 1.25 x V_R (DC) 2,000 hours	|Δ C/C| ≤ 2%, Δ tanδ ≤ 0.001 at 10 kHz for C ≤ 1 µF Δ tanδ ≤ 0.001 at 1 kHz for C > 1 µF IR after test ≥ 50% of initial limit
Resistance to Soldering Heat Test	**Test Conditions**		**Performances**
	Solder bath temperature: Dipping time (with heat screen):	260°C ±5°C 10 seconds ±1 second	|Δ C/C| ≤ 1%, Δ tanδ ≤ 0.001 at 10 kHz for C ≤ 1 µF Δ tanδ ≤ 0.001 at 1 kHz for C > 1 µF IR after test ≥ initial limit

Environmental Compliance

All KEMET pulse capacitors are RoHS compliant.

Table 1 – Ratings & Part Number Reference

VDC	VAC	Cap Value (µF)	Dimensions in mm			Lead Spacing (S)	dV/dt (V/µs)	Max K_0 (V^2/µs)	I_{pkr}	ESL	ESR max	$I_{rms\ max}$ (*)	Rth	KEMET Internal Part Number	Customer Part Number
										Lead Length 2x 4 mm	at 100 kHz	at 100 kHz 85°C			
			T	H	L				A_{pk}	nH	mΩ	A_{rms}	(°C/W)		
250	180	0.0068	3.0	8.0	10.0	7.5	1,100	550,000	7	8	94	0.8	98	76ID1680(1)30(2)	R76ID1680(1)30(2)
250	180	0.0082	3.0	8.0	10.0	7.5	1,100	550,000	9	8	78	0.9	98	76ID1820(1)30(2)	R76ID1820(1)30(2)
250	180	0.01	3.0	8.0	10.0	7.5	1,100	550,000	11	8	64	1.1	98	76ID2100(1)30(2)	R76ID2100(1)30(2)
250	180	0.012	4.0	9.0	10.0	7.5	1,100	550,000	13	8	53	1.4	88	76ID2120(1)40(2)	R76ID2120(1)40(2)
250	180	0.015	4.0	9.0	10.0	7.5	1,100	550,000	17	8	42	1.7	88	76ID2150(1)40(2)	R76ID2150(1)40(2)
250	180	0.018	4.0	9.0	10.0	7.5	1,100	550,000	20	8	35	2.0	88	76ID2180(1)40(2)	R76ID2180(1)40(2)
250	180	0.022	4.0	9.0	10.0	7.5	1,100	550,000	24	8	29	2.5	88	76ID2220(1)40(2)	R76ID2220(1)40(2)
250	180	0.027	5.0	10.5	10.0	7.5	1,100	550,000	30	8	24	3.1	78	76ID2270(1)40(2)	R76ID2270(1)40(2)
250	180	0.033	5.0	10.5	10.0	7.5	1,100	550,000	36	8	19	3.6	78	76ID2330(1)40(2)	R76ID2330(1)40(2)
250	180	0.039	6.0	12.0	10.5	7.5	1,100	550,000	43	8	16	4.2	69	76ID2390(1)30(2)	R76ID2390(1)30(2)
250	180	0.047	6.0	12.0	10.5	7.5	1,100	550,000	52	8	14	4.6	69	76ID2470(1)30(2)	R76ID2470(1)30(2)
250	180	0.027	4.0	9.0	13.0	10.0	1,000	500,000	27	9	24	3.1	79	76IF2270(1)30(2)	R76IF2270(1)30(2)
250	180	0.033	4.0	9.0	13.0	10.0	1,000	500,000	33	9	19	3.6	79	76IF2330(1)30(2)	R76IF2330(1)30(2)
250	180	0.039	4.0	9.0	13.0	10.0	1,000	500,000	39	9	16	3.9	79	76IF2390(1)30(2)	R76IF2390(1)30(2)
250	180	0.047	5.0	11.0	13.0	10.0	1,000	500,000	47	9	14	4.6	69	76IF2470(1)30(2)	R76IF2470(1)30(2)
250	180	0.056	5.0	11.0	13.0	10.0	1,000	500,000	56	9	20	3.8	69	76IF2560(1)30(2)	R76IF2560(1)30(2)
250	180	0.068	6.0	12.0	13.0	10.0	1,000	500,000	68	9	16	4.4	64	76IF2680(1)30(2)	R76IF2680(1)30(2)
250	180	0.082	6.0	12.0	13.0	10.0	1,000	500,000	82	9	14	4.8	64	76IF2820(1)30(2)	R76IF2820(1)30(2)
250	180	0.068	5.0	11.0	18.0	15.0	550	275,000	37	10	16	4.5	60	76II2680(1)30(2)	R76II2680(1)30(2)
250	180	0.082	5.0	11.0	18.0	15.0	550	275,000	45	10	14	4.9	60	76II2820(1)30(2)	R76II2820(1)30(2)
250	180	0.1	5.0	11.0	18.0	15.0	550	275,000	55	10	11	5.5	60	76II3100(1)30(2)	R76II3100(1)30(2)
250	180	0.12	6.0	12.0	18.0	15.0	550	275,000	66	10	13	5.2	56	76II3120(1)30(2)	R76II3120(1)30(2)
250	180	0.15	6.0	12.0	18.0	15.0	550	275,000	83	10	11	5.8	56	76II3150(1)30(2)	R76II3150(1)30(2)
250	180	0.18	7.5	13.5	18.0	15.0	550	275,000	99	10	9	6.7	51	76II3180(1)30(2)	R76II3180(1)30(2)
250	180	0.18	9.0	12.5	18.0	15.0	550	275,000	99	10	9	6.8	50	76II3180(1)70(2)	R76II3180(1)70(2)
250	180	0.22	7.5	13.5	18.0	15.0	550	275,000	121	10	7	7.4	51	76II3220(1)30(2)	R76II3220(1)30(2)
250	180	0.22	9.0	12.5	18.0	15.0	550	275,000	121	10	7	7.5	50	76II3220(1)70(2)	R76II3220(1)70(2)
250	180	0.27	8.5	14.5	18.0	15.0	550	275,000	149	10	6	8.4	48	76II3270(1)30(2)	R76II3270(1)30(2)
250	180	0.27	9.0	12.5	18.0	15.0	550	275,000	149	10	6	8.3	50	76II3270(1)70(2)	R76II3270(1)70(2)
250	180	0.33	10.0	16.0	18.0	15.0	550	275,000	182	10	5	9.7	44	76II3330(1)30(2)	R76II3330(1)30(2)
250	180	0.33	13.0	12.0	18.0	15.0	550	275,000	182	10	5	9.6	45	76II3330(1)70(2)	R76II3330(1)70(2)
250	180	0.39	10.0	16.0	18.0	15.0	550	275,000	215	10	4	10.5	44	76II3390(1)30(2)	R76II3390(1)30(2)
250	180	0.47	11.0	19.0	18.0	15.0	550	275,000	259	10	3	12.1	40	76II3470(1)30(2)	R76II3470(1)30(2)
250	180	0.22	6.0	15.0	26.5	22.5	300	150,000	66	16	11	6.5	43	76IN3220(1)00(2)	R76IN3220(1)00(2)
250	180	0.27	6.0	15.0	26.5	22.5	300	150,000	81	16	9	7.2	43	76IN3270(1)30(2)	R76IN3270(1)30(2)
250	180	0.33	6.0	15.0	26.5	22.5	300	150,000	99	16	7	8.0	43	76IN3330(1)30(2)	R76IN3330(1)30(2)
250	180	0.39	7.0	16.0	26.5	22.5	300	150,000	117	16	8	7.7	41	76IN3390(1)30(2)	R76IN3390(1)30(2)
250	180	0.47	7.0	16.0	26.5	22.5	300	150,000	141	16	7	8.5	41	76IN3470(1)30(2)	R76IN3470(1)30(2)
250	180	0.56	8.5	17.0	26.5	22.5	300	150,000	168	16	6	9.6	38	76IN3560(1)30(2)	R76IN3560(1)30(2)
250	180	0.68	10.0	18.5	26.5	22.5	300	150,000	204	16	4.7	10.9	36	76IN3680(1)30(2)	R76IN3680(1)30(2)
250	180	0.82	10.0	18.5	26.5	22.5	300	150,000	246	16	3.9	12.0	36	76IN3820(1)30(2)	R76IN3820(1)30(2)
250	180	1	11.0	20.0	26.5	22.5	300	150,000	300	16	5.6	10.3	34	76IN4100(1)30(2)	R76IN4100(1)30(2)
250	180	1.2	13.0	22.0	26.5	22.5	300	150,000	360	16	4.6	11.7	31	76IN4120(1)30(2)	R76IN4120(1)30(2)
250	180	1.5	14.5	29.5	26.5	22.5	300	150,000	450	16	3.7	14.1	27	76IN4150(1)30(2)	R76IN4150(1)30(2)
250	180	1.8	14.5	29.5	26.5	22.5	300	150,000	540	16	3.1	15.4	27	76IN4180(1)30(2)	R76IN4180(1)30(2)
250	180	0.82	9.0	17.0	32.0	27.5	200	100,000	164	18	6	9.9	35	76IR3820(1)30(2)	R76IR3820(1)30(2)
250	180	1	11.0	20.0	32.0	27.5	200	100,000	200	18	6	10.7	31	76IR4100(1)30(2)	R76IR4100(1)30(2)
250	180	1	24.0	15.0	32.0	27.5	200	100,000	200	18	6	11.5	27	76IR4100(1)L0(2)	R76IR4100(1)L0(2)
250	180	1.2	11.0	20.0	32.0	27.5	200	100,000	240	18	5.3	11.0	31	76IR4120(1)40(2)	R76IR4120(1)40(2)
VDC	VAC	Cap Value	T	H	L	Lead Spacing (S)	dV/dt (V/µs)	Max K_0 (V^2/µs)	A_{pk}	Lead Length 2x 4 mm	at 100 kHz	at 100 kHz 85°C	(°C/W)	KEMET Internal Part Number	Customer Part Number
									I_{pkr}	ESL	ESR max	$I_{rms\ max}$ (*)	R_{th}		

(1) Insert lead and packaging code. See Ordering Options Table for available options.
(2) H = 2.5% (only for C ≥ 1,000 pF), J = 5%, K = 10%
(*) I_{rms} value that leads to a ΔT of ≈ 20°C in the hot spot > $T_{HS} = T_{AMB} + \Delta T$ = 85°C + 20°C = 105°C

Table 1 – Ratings & Part Number Reference cont.

VDC	VAC	Cap Value (µF)	Dimensions in mm			Lead Spacing (S)	dV/dt (V/µs)	Max K_0 (V^2/µs)	I_{pkr}	ESL	ESR max	$I_{rms\ max}$ (*)	Rth	KEMET Internal Part Number	Customer Part Number
										Lead Length 2x 4 mm	at 100 kHz	at 100 kHz 85°C			
			T	H	L				A_{pk}	nH	mΩ	A_{rms}	(°C/W)		
250	180	1.2	24.0	15.0	32.0	27.5	200	100,000	240	18	5	11.8	27	76IR4120(1)L0(2)	R76IR4120(1)L0(2)
250	180	1.5	13.0	22.0	32.0	27.5	200	100,000	300	18	4.2	12.7	29	76IR4150(1)30(2)	R76IR4150(1)30(2)
250	180	1.5	24.0	15.0	32.0	27.5	200	100,000	300	18	4	13.2	27	76IR4150(1)L0(2)	R76IR4150(1)L0(2)
250	180	1.8	13.0	25.0	32.0	27.5	200	100,000	360	18	5.3	11.7	28	76IR4180(1)20(2)	R76IR4180(1)20(2)
250	180	1.8	24.0	15.0	32.0	27.5	200	100,000	360	18	5	11.8	27	76IR4180(1)L0(2)	R76IR4180(1)L0(2)
250	180	2.2	14.0	28.0	32.0	27.5	200	100,000	440	18	4.3	13.3	26	76IR4220(1)40(2)	R76IR4220(1)40(2)
250	180	2.7	18.0	33.0	32.0	27.5	200	100,000	540	18	7.1	11.1	23	76IR4270(1)30(2)	R76IR4270(1)30(2)
250	180	2.7	16.0	30.0	32.0	27.5	200	100,000	540	18	7.1	10.7	25	76IR4270(1)40(2)	R76IR4270(1)40(2)
250	180	3.3	18.0	33.0	32.0	27.5	200	100,000	660	18	5.8	12.3	23	76IR4330(1)30(2)	R76IR4330(1)30(2)
250	180	3.9	18.0	33.0	32.0	27.5	200	100,000	780	18	4.9	13.3	23	76IR4390(1)30(2)	R76IR4390(1)30(2)
250	180	4.7	22.0	37.0	32.0	27.5	200	100,000	940	18	4.1	15.4	21	76IR4470(1)30(2)	R76IR4470(1)30(2)
250	180	5.6	22.0	37.0	32.0	27.5	200	100,000	1,120	18	3.4	16.8	21	76IR4560(1)40(2)	R76IR4560(1)40(2)
250	180	1.2	11.0	22.0	41.5	37.5	100	50,000	120	20	5.3	11.8	27	76IW4120(1)30(2)	R76IW4120(1)30(2)
250	180	1.5	11.0	22.0	41.5	37.5	100	50,000	150	20	4.2	13.2	27	76IW4150(1)30(2)	R76IW4150(1)30(2)
250	180	1.5	24.0	15.0	41.5	37.5	100	50,000	150	20	4.2	13.9	24	76IW4150(1)L0(2)	R76IW4150(1)L0(2)
250	180	1.8	11.0	22.0	41.5	37.5	100	50,000	180	20	5.3	11.8	27	76IW4180(1)30(2)	R76IW4180(1)30(2)
250	180	1.8	24.0	15.0	41.5	37.5	100	50,000	180	20	5.3	12.4	24	76IW4180(1)L0(2)	R76IW4180(1)L0(2)
250	180	2.2	13.0	24.0	41.5	37.5	100	50,000	220	20	4.3	13.5	25	76IW4220(1)30(2)	R76IW4220(1)30(2)
250	180	2.2	24.0	15.0	41.5	37.5	100	50,000	220	20	4.3	13.7	24	76IW4220(1)L0(2)	R76IW4220(1)L0(2)
250	180	2.7	16.0	28.5	41.5	37.5	100	50,000	270	20	7.1	11.2	23	76IW4270(1)20(2)	R76IW4270(1)20(2)
250	180	2.7	24.0	19.0	41.5	37.5	100	50,000	270	20	7.1	11.1	23	76IW4270(1)L0(2)	R76IW4270(1)L0(2)
250	180	3.3	16.0	28.5	41.5	37.5	100	50,000	330	20	5.8	12.4	23	76IW4330(1)30(2)	R76IW4330(1)30(2)
250	180	3.3	24.0	19.0	41.5	37.5	100	50,000	330	20	5.8	12.3	23	76IW4330(1)L0(2)	R76IW4330(1)L0(2)
250	180	3.9	16.0	28.5	41.5	37.5	100	50,000	390	20	4.9	13.5	23	76IW4390(1)30(2)	R76IW4390(1)30(2)
250	180	4.7	19.0	32.0	41.5	37.5	100	50,000	470	20	4.1	15.4	21	76IW4470(1)30(2)	R76IW4470(1)30(2)
250	180	5.6	20.0	40.0	41.5	37.5	100	50,000	560	20	3.4	17.7	19	76IW4560(1)20(2)	R76IW4560(1)20(2)
250	180	6.8	20.0	40.0	41.5	37.5	100	50,000	680	20	7.0	12.3	19	76IW4680(1)30(2)	R76IW4680(1)30(2)
250	180	8.2	24.0	44.0	41.5	37.5	100	50,000	820	20	5.8	14.1	17	76IW4820(1)20(2)	R76IW4820(1)20(2)
250	180	10	24.0	44.0	41.5	37.5	100	50,000	1,000	20	4.8	15.6	17	76IW5100(1)30(2)	R76IW5100(1)30(2)
250	180	12	30.0	45.0	41.5	37.5	100	50,000	1,200	20	9.9	11.2	16	76IW5120(1)30(2)	R76IW5120(1)30(2)
400	250	0.0027	3.0	8.0	10.0	7.5	1,700	1,360,000	5	8	236	0.4	98	76MD1270(1)30(2)	R76MD1270(1)30(2)
400	250	0.0033	3.0	8.0	10.0	7.5	1,700	1,360,000	6	8	193	0.5	98	76MD1330(1)30(2)	R76MD1330(1)30(2)
400	250	0.0039	3.0	8.0	10.0	7.5	1,700	1,360,000	7	8	163	0.6	98	76MD1390(1)30(2)	R76MD1390(1)30(2)
400	250	0.0047	3.0	8.0	10.0	7.5	1,700	1,360,000	8	8	135	0.7	98	76MD1470(1)30(2)	R76MD1470(1)30(2)
400	250	0.0056	3.0	8.0	10.0	7.5	1,700	1,360,000	10	8	114	0.9	98	76MD1560(1)30(2)	R76MD1560(1)30(2)
400	250	0.0068	4.0	9.0	10.0	7.5	1,700	1,360,000	12	8	94	1.1	88	76MD1680(1)40(2)	R76MD1680(1)40(2)
400	250	0.0082	4.0	9.0	10.0	7.5	1,700	1,360,000	14	8	78	1.3	88	76MD1820(1)40(2)	R76MD1820(1)40(2)
400	250	0.01	4.0	9.0	10.0	7.5	1,700	1,360,000	17	8	64	1.6	88	76MD2100(1)40(2)	R76MD2100(1)40(2)
400	250	0.012	4.0	9.0	10.0	7.5	1,700	1,360,000	20	8	53	1.9	88	76MD2120(1)40(2)	R76MD2120(1)40(2)
400	250	0.015	5.0	10.5	10.0	7.5	1,700	1,360,000	26	8	42	2.4	78	76MD2150(1)40(2)	R76MD2150(1)40(2)
400	250	0.018	5.0	10.5	10.0	7.5	1,700	1,360,000	31	8	35	2.7	78	76MD2180(1)40(2)	R76MD2180(1)40(2)
400	250	0.022	6.0	12.0	10.5	7.5	1,700	1,360,000	37	8	29	3.2	69	76MD2220(1)30(2)	R76MD2220(1)30(2)
400	250	0.027	6.0	12.0	10.5	7.5	1,700	1,360,000	46	8	24	3.5	69	76MD2270(1)30(2)	R76MD2270(1)30(2)
400	250	0.01	4.0	9.0	13.0	10.0	1,500	1,200,000	15	9	64	1.6	79	76MF2100(1)00(2)	R76MF2100(1)00(2)
400	250	0.012	4.0	9.0	13.0	10.0	1,500	1,200,000	18	9	53	1.9	79	76MF2120(1)00(2)	R76MF2120(1)00(2)
400	250	0.015	4.0	9.0	13.0	10.0	1,500	1,200,000	23	9	42	2.4	79	76MF2150(1)30(2)	R76MF2150(1)30(2)
400	250	0.018	4.0	9.0	13.0	10.0	1,500	1,200,000	27	9	35	2.7	79	76MF2180(1)30(2)	R76MF2180(1)30(2)
400	250	0.022	4.0	9.0	13.0	10.0	1,500	1,200,000	33	9	29	3.0	79	76MF2220(1)30(2)	R76MF2220(1)30(2)
VDC	VAC	Cap Value	T	H	L	Lead Spacing (S)	dV/dt (V/µs)	Max K_0 (V^2/µs)	A_{pk}	Lead Length 2x 4 mm	at 100 kHz	at 100 kHz 85°C	(°C/W)	KEMET Internal Part Number	Customer Part Number
									I_{pkr}	ESL	ESR max	$I_{rms\ max}$ (*)	R_{th}		

(1) Insert lead and packaging code. See Ordering Options Table for available options.
(2) H = 2.5% (only for C ≥ 1,000 pF), J = 5%, K = 10%
(*) I_{rms} value that leads to a ΔT of ≈ 20°C in the hot spot > $T_{HS} = T_{AMB} + \Delta T$ = 85°C + 20°C = 105°C

Table 1 – Ratings & Part Number Reference cont.

VDC	VAC	Cap Value (µF)	Dimensions in mm			Lead Spacing (S)	dV/dt (V/µs)	Max K_0 (V^2/µs)	I_{pkr}	ESL	ESR max	$I_{rms\ max}$ (*)	Rth	KEMET Internal Part Number	Customer Part Number
										Lead Length 2x 4 mm	at 100 kHz	at 100 kHz 85°C			
			T	H	L				A_{pk}	nH	mΩ	A_{rms}	(°C/W)		
400	250	0.027	5.0	11.0	13.0	10.0	1,500	1,200,000	41	9	24	3.5	69	76MF2270(1)30(2)	R76MF2270(1)30(2)
400	250	0.027	4.0	9.0	13.0	10.0	1,500	1,200,000	41	9	24	3.3	79	76MF2270(1)50(2)	R76MF2270(1)50(2)
400	250	0.033	5.0	11.0	13.0	10.0	1,500	1,200,000	50	9	19	3.9	69	76MF2330(1)30(2)	R76MF2330(1)30(2)
400	250	0.039	5.0	11.0	13.0	10.0	1,500	1,200,000	59	9	16	4.2	69	76MF2390(1)50(2)	R76MF2390(1)50(2)
400	250	0.039	6.0	12.0	13.0	10.0	1,500	1,200,000	59	9	16	4.4	64	76MF2390(1)30(2)	R76MF2390(1)30(2)
400	250	0.047	5.0	11.0	13.0	10.0	1,500	1,200,000	71	9	14	4.6	69	76MF2470(1)50(2)	R76MF2470(1)50(2)
400	250	0.047	6.0	12.0	13.0	10.0	1,500	1,200,000	71	9	14	4.8	64	76MF2470(1)30(2)	R76MF2470(1)30(2)
400	250	0.056	6.0	12.0	13.0	10.0	1,500	1,200,000	84	9	20	4.0	64	76MF2560(1)50(2)	R76MF2560(1)50(2)
400	250	0.068	6.0	12.0	13.0	10.0	1,500	1,200,000	102	9	16	4.4	64	76MF2680(1)50(2)	R76MF2680(1)50(2)
400	250	0.033	5.0	11.0	18.0	15.0	900	720,000	30	10	19	4.1	60	76MI2330(1)00(2)	R76MI2330(1)00(2)
400	250	0.039	5.0	11.0	18.0	15.0	900	720,000	35	10	16	4.5	60	76MI2390(1)30(2)	R76MI2390(1)30(2)
400	250	0.047	5.0	11.0	18.0	15.0	900	720,000	42	10	14	5.0	60	76MI2470(1)30(2)	R76MI2470(1)30(2)
400	250	0.056	5.0	11.0	18.0	15.0	900	720,000	50	10	20	4.1	60	76MI2560(1)30(2)	R76MI2560(1)30(2)
400	250	0.068	6.0	12.0	18.0	15.0	900	720,000	61	10	16	4.7	56	76MI2680(1)30(2)	R76MI2680(1)30(2)
400	250	0.068	5.0	11.0	18.0	15.0	900	720,000	61	10	16	4.5	60	76MI2680(1)50(2)	R76MI2680(1)50(2)
400	250	0.082	6.0	12.0	18.0	15.0	900	720,000	74	10	14	5.1	56	76MI2820(1)30(2)	R76MI2820(1)30(2)
400	250	0.1	6.0	12.0	18.0	15.0	900	720,000	90	10	11	5.7	56	76MI3100(1)50(2)	R76MI3100(1)50(2)
400	250	0.1	7.5	13.5	18.0	15.0	900	720,000	90	10	11	6.0	51	76MI3100(1)30(2)	R76MI3100(1)30(2)
400	250	0.1	9.0	12.5	18.0	15.0	900	720,000	90	10	11	6.0	50	76MI3100(1)70(2)	R76MI3100(1)70(2)
400	250	0.12	7.5	13.5	18.0	15.0	900	720,000	108	10	13	5.5	51	76MI3120(1)30(2)	R76MI3120(1)30(2)
400	250	0.12	9.0	12.5	18.0	15.0	900	720,000	108	10	13	5.5	50	76MI3120(1)70(2)	R76MI3120(1)70(2)
400	250	0.15	7.5	13.5	18.0	15.0	900	720,000	135	10	11	6.1	51	76MI3150(1)50(2)	R76MI3150(1)50(2)
400	250	0.15	8.5	14.5	18.0	15.0	900	720,000	135	10	11	6.3	48	76MI3150(1)30(2)	R76MI3150(1)30(2)
400	250	0.15	13.0	12.0	18.0	15.0	900	720,000	135	10	11	6.5	45	76MI3150(1)70(2)	R76MI3150(1)70(2)
400	250	0.18	8.5	14.5	18.0	15.0	900	720,000	162	10	9	6.9	48	76MI3180(1)50(2)	R76MI3180(1)50(2)
400	250	0.18	10.0	16.0	18.0	15.0	900	720,000	162	10	9	7.2	44	76MI3180(1)30(2)	R76MI3180(1)30(2)
400	250	0.18	13.0	12.0	18.0	15.0	900	720,000	162	10	9	7.1	45	76MI3180(1)70(2)	R76MI3180(1)70(2)
400	250	0.22	10.0	16.0	18.0	15.0	900	720,000	198	10	7	7.9	44	76MI3220(1)30(2)	R76MI3220(1)30(2)
400	250	0.27	10.0	16.0	18.0	15.0	900	720,000	243	10	6	8.8	44	76MI3270(1)50(2)	R76MI3270(1)50(2)
400	250	0.27	11.0	19.0	18.0	15.0	900	720,000	243	10	6	9.2	40	76MI3270(1)30(2)	R76MI3270(1)30(2)
400	250	0.33	11.0	19.0	18.0	15.0	900	720,000	297	10	5	10.2	40	76MI3330(1)50(2)	R76MI3330(1)50(2)
400	250	0.39	11.0	19.0	18.0	15.0	900	720,000	351	10	4	11.0	40	76MI3390(1)50(2)	R76MI3390(1)50(2)
400	250	0.12	6.0	15.0	26.5	22.5	500	400,000	60	16	20	4.8	43	76MN3120(1)30(2)	R76MN3120(1)30(2)
400	250	0.15	6.0	15.0	26.5	22.5	500	400,000	75	16	16	5.4	43	76MN3150(1)30(2)	R76MN3150(1)30(2)
400	250	0.18	6.0	15.0	26.5	22.5	500	400,000	90	16	13	5.9	43	76MN3180(1)30(2)	R76MN3180(1)30(2)
400	250	0.22	7.0	16.0	26.5	22.5	500	400,000	110	16	11	6.7	41	76MN3220(1)30(2)	R76MN3220(1)30(2)
400	250	0.22	6.0	15.0	26.5	22.5	500	400,000	110	16	11	6.5	43	76MN3220(1)50(2)	R76MN3220(1)50(2)
400	250	0.27	8.5	17.0	26.5	22.5	500	400,000	135	16	9	7.7	38	76MN3270(1)30(2)	R76MN3270(1)30(2)
400	250	0.27	7.0	16.0	26.5	22.5	500	400,000	135	16	9	7.4	41	76MN3270(1)50(2)	R76MN3270(1)50(2)
400	250	0.33	8.5	17.0	26.5	22.5	500	400,000	165	16	7	8.5	38	76MN3330(1)30(2)	R76MN3330(1)30(2)
400	250	0.39	8.5	17.0	26.5	22.5	500	400,000	195	16	8	8.0	38	76MN3390(1)50(2)	R76MN3390(1)50(2)
400	250	0.39	10.0	18.5	26.5	22.5	500	400,000	195	16	8	8.3	36	76MN3390(1)30(2)	R76MN3390(1)30(2)
400	250	0.47	10.0	18.5	26.5	22.5	500	400,000	235	16	7	9.1	36	76MN3470(1)30(2)	R76MN3470(1)30(2)
400	250	0.56	10.0	18.5	26.5	22.5	500	400,000	280	16	6	9.9	36	76MN3560(1)50(2)	R76MN3560(1)50(2)
400	250	0.56	11.0	20.0	26.5	22.5	500	400,000	280	16	6	10.2	34	76MN3560(1)30(2)	R76MN3560(1)30(2)
400	250	0.68	11.0	20.0	26.5	22.5	500	400,000	340	16	5	11.2	34	76MN3680(1)50(2)	R76MN3680(1)50(2)
400	250	0.68	13.0	22.0	26.5	22.5	500	400,000	340	16	4.7	11.7	31	76MN3680(1)30(2)	R76MN3680(1)30(2)
400	250	0.82	13.0	22.0	26.5	22.5	500	400,000	410	16	3.9	12.8	31	76MN3820(1)50(2)	R76MN3820(1)50(2)
VDC	VAC	Cap Value	T	H	L	Lead Spacing (S)	dV/dt (V/µs)	Max K_0 (V^2/µs)	A_{pk}	Lead Length 2x 4 mm	at 100 kHz	at 100 kHz 85°C	(°C/W)	KEMET Internal Part Number	Customer Part Number
									I_{pkr}	ESL	ESR max	$I_{rms\ max}$ (*)	R_{th}		

(1) Insert lead and packaging code. See Ordering Options Table for available options.
(2) H = 2.5% (only for C ≥ 1,000 pF), J = 5%, K = 10%
(*) I_{rms} value that leads to a ΔT of ≈ 20°C in the hot spot > $T_{HS} = T_{AMB} + \Delta T$ = 85°C + 20°C = 105°C

Table 1 – Ratings & Part Number Reference cont.

VDC	VAC	Cap Value (µF)	Dimensions in mm			Lead Spacing (S)	dV/dt (V/µs)	Max K_0 (V^2/µs)	I_{pkr}	ESL	ESR max	$I_{rms\ max}$ (*)	Rth	KEMET Internal Part Number	Customer Part Number
										Lead Length 2x 4 mm	at 100 kHz	at 100 kHz 85°C			
			T	H	L				A_{pk}	nH	mΩ	A_{rms}	(°C/W)		
400	250	1	14.5	29.5	26.5	22.5	500	400,000	500	16	6	11.5	27	76MN4100(1)30(2)	R76MN4100(1)30(2)
400	250	0.39	9.0	17.0	32.0	27.5	300	240,000	117	18	8	8.4	35	76MR3390(1)30(2)	R76MR3390(1)30(2)
400	250	0.47	9.0	17.0	32.0	27.5	300	240,000	141	18	7	9.2	35	76MR3470(1)30(2)	R76MR3470(1)30(2)
400	250	0.56	11.0	20.0	32.0	27.5	300	240,000	168	18	6	10.6	31	76MR3560(1)30(2)	R76MR3560(1)30(2)
400	250	0.68	11.0	20.0	32.0	27.5	300	240,000	204	18	7	9.5	31	76MR3680(1)30(2)	R76MR3680(1)30(2)
400	250	0.68	24.0	15.0	32.0	27.5	300	240,000	204	18	7	10.2	27	76MR3680(1)L0(2)	R76MR3680(1)L0(2)
400	250	0.82	13.0	22.0	32.0	27.5	300	240,000	246	18	6	10.9	29	76MR3820(1)30(2)	R76MR3820(1)30(2)
400	250	0.82	24.0	15.0	32.0	27.5	300	240,000	246	18	6	11.3	27	76MR3820(1)L0(2)	R76MR3820(1)L0(2)
400	250	1	13.0	22.0	32.0	27.5	300	240,000	300	18	6	11.1	29	76MR4100(1)40(2)	R76MR4100(1)40(2)
400	250	1	24.0	15.0	32.0	27.5	300	240,000	300	18	6	11.5	27	76MR4100(1)L0(2)	R76MR4100(1)L0(2)
400	250	1.2	14.0	28.0	32.0	27.5	300	240,000	360	18	5	12.0	26	76MR4120(1)40(2)	R76MR4120(1)40(2)
400	250	1.2	24.0	15.0	32.0	27.5	300	240,000	360	18	5.3	11.8	27	76MR4120(1)L0(2)	R76MR4120(1)L0(2)
400	250	1.5	16.0	30.0	32.0	27.5	300	240,000	450	18	4.2	13.9	25	76MR4150(1)40(2)	R76MR4150(1)40(2)
400	250	1.5	18.0	33.0	32.0	27.5	300	240,000	450	18	4.2	14.3	23	76MR4150(1)30(2)	R76MR4150(1)30(2)
400	250	1.8	16.0	30.0	32.0	27.5	300	240,000	540	18	5.3	12.4	25	76MR4180(1)40(2)	R76MR4180(1)40(2)
400	250	1.8	18.0	33.0	32.0	27.5	300	240,000	540	18	5.3	12.8	23	76MR4180(1)30(2)	R76MR4180(1)30(2)
400	250	2.2	18.0	33.0	32.0	27.5	300	240,000	660	18	4.3	14.2	23	76MR4220(1)40(2)	R76MR4220(1)40(2)
400	250	2.2	22.0	37.0	32.0	27.5	300	240,000	660	18	4.3	14.9	21	76MR4220(1)30(2)	R76MR4220(1)30(2)
400	250	2.7	22.0	37.0	32.0	27.5	300	240,000	810	18	7.1	11.7	21	76MR4270(1)30(2)	R76MR4270(1)30(2)
400	250	1	11.0	22.0	41.5	37.5	180	144,000	180	20	6	11.5	27	76MW4100(1)30(2)	R76MW4100(1)30(2)
400	250	1	24.0	15.0	41.5	37.5	180	144,000	180	20	6	12.1	24	76MW4100(1)L0(2)	R76MW4100(1)L0(2)
400	250	1.2	13.0	24.0	41.5	37.5	180	144,000	216	20	5	12.2	25	76MW4120(1)30(2)	R76MW4120(1)30(2)
400	250	1.2	24.0	15.0	41.5	37.5	180	144,000	216	20	5	12.4	24	76MW4120(1)L0O2)	R76MW4120(1)L0O2)
400	250	1.5	13.0	24.0	41.5	37.5	180	144,000	270	20	4	13.7	25	76MW4150(1)30(2)	R76MW4150(1)30(2)
400	250	1.5	24.0	15.0	41.5	37.5	180	144,000	270	20	4	13.9	24	76MW4150(1)L0(2)	R76MW4150(1)L0(2)
400	250	1.8	16.0	28.5	41.5	37.5	180	144,000	324	20	5	12.9	23	76MW4180(1)30(2)	R76MW4180(1)30(2)
400	250	1.8	24.0	19.0	41.5	37.5	180	144,000	324	20	5.3	12.8	23	76MW4180(1)L0(2)	R76MW4180(1)L0(2)
400	250	2.2	16.0	28.5	41.5	37.5	180	144,000	396	20	4.3	14.3	23	76MW4220(1)30(2)	R76MW4220(1)30(2)
400	250	2.2	19.0	32.0	41.5	37.5	180	144,000	396	20	4.3	14.9	21	76MW4220(1)30(2)	R76MW4220(1)30(2)
400	250	2.2	24.0	19.0	41.5	37.5	180	144,000	396	20	4.3	14.2	23	76MW4220(1)L0(2)	R76MW4220(1)L0(2)
400	250	2.7	19.0	32.0	41.5	37.5	180	144,000	486	20	7.1	11.7	21	76MW4270(1)30(2)	R76MW4270(1)30(2)
400	250	3.3	19.0	32.0	41.5	37.5	180	144,000	594	20	5.8	12.9	21	76MW4330(1)30(2)	R76MW4330(1)30(2)
400	250	3.9	20.0	40.0	41.5	37.5	180	144,000	702	20	4.9	14.8	19	76MW4390(1)30(2)	R76MW4390(1)30(2)
400	250	4.7	20.0	40.0	41.5	37.5	180	144,000	846	20	4.1	16.2	19	76MW4470(1)30(2)	R76MW4470(1)30(2)
400	250	5.6	24.0	44.0	41.5	37.5	180	144,000	1,008	20	3.4	18.4	17	76MW4560(1)30(2)	R76MW4560(1)30(2)
400	250	6.8	30.0	45.0	41.5	37.5	180	144,000	1,224	20	7.0	13.3	16	76MW4680(1)30(2)	R76MW4680(1)30(2)
400	250	8.2	30.0	45.0	41.5	37.5	180	144,000	1,476	20	5.8	14.6	16	76MW4820(1)30(2)	R76MW4820(1)30(2)
630	250	0.00068	3.0	8.0	10.0	7.5	2,800	3,528,000	2	8	936	0.1	98	76PD0680(1)00(2)	R76PD0680(1)00(2)
630	250	0.00082	3.0	8.0	10.0	7.5	2,800	3,528,000	2	8	776	0.1	98	76PD0820(1)00(2)	R76PD0820(1)00(2)
630	250	0.001	3.0	8.0	10.0	7.5	2,800	3,528,000	3	8	637	0.2	98	76PD1100(1)00(2)	R76PD1100(1)00(2)
630	250	0.0012	3.0	8.0	10.0	7.5	2,800	3,528,000	3	8	531	0.2	98	76PD1120(1)00(2)	R76PD1120(1)00(2)
630	250	0.0015	3.0	8.0	10.0	7.5	2,800	3,528,000	4	8	424	0.2	98	76PD1150(1)00(2)	R76PD1150(1)00(2)
630	250	0.0018	3.0	8.0	10.0	7.5	2,800	3,528,000	5	8	354	0.3	98	76PD1180(1)00(2)	R76PD1180(1)00(2)
630	250	0.0022	3.0	8.0	10.0	7.5	2,800	3,528,000	6	8	289	0.3	98	76PD1220(1)00(2)	R76PD1220(1)00(2)
630	250	0.0027	4.0	9.0	10.0	7.5	2,800	3,528,000	8	8	236	0.4	88	76PD1270(1)40(2)	R76PD1270(1)40(2)
630	250	0.0033	4.0	9.0	10.0	7.5	2,800	3,528,000	9	8	193	0.5	88	76PD1330(1)40(2)	R76PD1330(1)40(2)
630	250	0.0039	4.0	9.0	10.0	7.5	2,800	3,528,000	11	8	163	0.6	88	76PD1390(1)40(2)	R76PD1390(1)40(2)
630	250	0.0047	4.0	9.0	10.0	7.5	2,800	3,528,000	13	8	135	0.7	88	76PD1470(1)40(2)	R76PD1470(1)40(2)
VDC	VAC	Cap Value	T	H	L	Lead Spacing (S)	dV/dt (V/µs)	Max K_0 (V^2/µs)	A_{pk}	Lead Length 2x 4 mm	at 100 kHz	at 100 kHz 85°C	(°C/W)	KEMET Internal Part Number	Customer Part Number
									I_{pkr}	ESL	ESR max	$I_{rms\ max}$ (*)	R_{th}		

(1) Insert lead and packaging code. See Ordering Options Table for available options.
(2) H = 2.5% (only for C ≥ 1,000 pF), J = 5%, K = 10%
(*) I_{rms} value that leads to a ΔT of ≈ 20°C in the hot spot > $T_{HS} = T_{AMB} + \Delta T$ = 85°C + 20°C = 105°C

Table 1 – Ratings & Part Number Reference cont.

VDC	VAC	Cap Value (µF)	Dimensions in mm			Lead Spacing (S)	dV/dt (V/µs)	Max K_0 (V^2/µs)	I_{pkr}	ESL	ESR max	$I_{rms\ max}$ (*)	Rth	KEMET Internal Part Number	Customer Part Number
										Lead Length 2x 4 mm	at 100 kHz	at 100 kHz 85°C			
			T	H	L				A_{pk}	nH	mΩ	A_{rms}	(°C/W)		
630	250	0.0056	4.0	9.0	10.0	7.5	2,800	3,528,000	16	8	114	0.9	88	76PD1560(1)40(2)	R76PD1560(1)40(2)
630	250	0.0068	5.0	10.5	10.0	7.5	2,800	3,528,000	19	8	94	1.1	78	76PD1680(1)40(2)	R76PD1680(1)40(2)
630	250	0.0082	5.0	10.5	10.0	7.5	2,800	3,528,000	23	8	78	1.3	78	76PD1820(1)40(2)	R76PD1820(1)40(2)
630	250	0.01	6.0	12.0	10.5	7.5	2,800	3,528,000	28	8	64	1.6	69	76PD2100(1)30(2)	R76PD2100(1)30(2)
630	250	0.012	6.0	12.0	10.5	7.5	2,800	3,528,000	34	8	53	1.9	69	76PD2120(1)30(2)	R76PD2120(1)30(2)
630	400	0.0033	4.0	9.0	13.0	10.0	4,000	5,040,000	13	9	193	0.8	79	76PF1330(1)00(2)	R76PF1330(1)00(2)
630	400	0.0039	4.0	9.0	13.0	10.0	4,000	5,040,000	16	9	163	1.0	79	76PF1390(1)00(2)	R76PF1390(1)00(2)
630	400	0.0047	4.0	9.0	13.0	10.0	4,000	5,040,000	19	9	135	1.2	79	76PF1470(1)00(2)	R76PF1470(1)00(2)
630	400	0.0056	4.0	9.0	13.0	10.0	4,000	5,040,000	22	9	114	1.4	79	76PF1560(1)00(2)	R76PF1560(1)00(2)
630	400	0.0068	4.0	9.0	13.0	10.0	4,000	5,040,000	27	9	94	1.6	79	76PF1680(1)00(2)	R76PF1680(1)00(2)
630	400	0.0082	4.0	9.0	13.0	10.0	4,000	5,040,000	33	9	78	1.8	79	76PF1820(1)00(2)	R76PF1820(1)00(2)
630	400	0.01	4.0	9.0	13.0	10.0	4,000	5,040,000	40	9	64	2.0	79	76PF2100(1)50(2)	R76PF2100(1)50(2)
630	400	0.01	5.0	11.0	13.0	10.0	4,000	5,040,000	40	9	64	2.1	69	76PF2100(1)30(2)	R76PF2100(1)30(2)
630	400	0.012	5.0	11.0	13.0	10.0	4,000	5,040,000	48	9	53	2.3	69	76PF2120(1)30(2)	R76PF2120(1)30(2)
630	400	0.015	5.0	11.0	13.0	10.0	4,000	5,040,000	60	9	42	2.6	69	76PF2150(1)50(2)	R76PF2150(1)50(2)
630	400	0.015	6.0	12.0	13.0	10.0	4,000	5,040,000	60	9	42	2.7	64	76PF2150(1)30(2)	R76PF2150(1)30(2)
630	400	0.018	5.0	11.0	13.0	10.0	4,000	5,040,000	72	9	35	2.9	69	76PF2180(1)50(2)	R76PF2180(1)50(2)
630	400	0.018	6.0	12.0	13.0	10.0	4,000	5,040,000	72	9	35	3.0	64	76PF2180(1)30(2)	R76PF2180(1)30(2)
630	400	0.022	6.0	12.0	13.0	10.0	4,000	5,040,000	88	9	29	3.3	64	76PF2220(1)30(2)	R76PF2220(1)30(2)
630	400	0.027	6.0	12.0	13.0	10.0	4,000	5,040,000	108	9	24	3.6	64	76PF2270(1)50(2)	R76PF2270(1)50(2)
630	400	0.012	5.0	11.0	18.0	15.0	3,000	3,780,000	36	10	53	2.5	60	76PI2120(1)00(2)	R76PI2120(1)00(2)
630	400	0.015	5.0	11.0	18.0	15.0	3,000	3,780,000	45	10	42	2.8	60	76PI2150(1)00(2)	R76PI2150(1)00(2)
630	400	0.018	5.0	11.0	18.0	15.0	3,000	3,780,000	54	10	35	3.1	60	76PI2180(1)00(2)	R76PI2180(1)00(2)
630	400	0.022	5.0	11.0	18.0	15.0	3,000	3,780,000	66	10	29	3.4	60	76PI2220(1)30(2)	R76PI2220(1)30(2)
630	400	0.027	5.0	11.0	18.0	15.0	3,000	3,780,000	81	10	24	3.8	60	76PI2270(1)30(2)	R76PI2270(1)30(2)
630	400	0.033	6.0	12.0	18.0	15.0	3,000	3,780,000	99	10	19	4.3	56	76PI2330(1)30(2)	R76PI2330(1)30(2)
630	400	0.033	5.0	11.0	18.0	15.0	3,000	3,780,000	99	10	19	4.1	60	76PI2330(1)50(2)	R76PI2330(1)50(2)
630	400	0.039	6.0	12.0	18.0	15.0	3,000	3,780,000	117	10	16	4.7	56	76PI2390(1)30(2)	R76PI2390(1)30(2)
630	400	0.047	6.0	12.0	18.0	15.0	3,000	3,780,000	141	10	14	5.1	56	76PI2470(1)50(2)	R76PI2470(1)50(2)
630	400	0.047	7.5	13.5	18.0	15.0	3,000	3,780,000	141	10	14	5.4	51	76PI2470(1)30(2)	R76PI2470(1)30(2)
630	400	0.047	9.0	12.5	18.0	15.0	3,000	3,780,000	141	10	14	5.5	50	76PI2470(1)70(2)	R76PI2470(1)70(2)
630	400	0.056	7.5	13.5	18.0	15.0	3,000	3,780,000	168	10	20	4.5	51	76PI2560(1)30(2)	R76PI2560(1)30(2)
630	400	0.056	9.0	12.5	18.0	15.0	3,000	3,780,000	168	10	20	4.5	50	76PI2560(1)70(2)	R76PI2560(1)70(2)
630	400	0.068	7.5	13.5	18.0	15.0	3,000	3,780,000	204	10	16	4.9	51	76PI2680(1)50(2)	R76PI2680(1)50(2)
630	400	0.068	8.5	14.5	18.0	15.0	3,000	3,780,000	204	10	16	5.1	48	76PI2680(1)30(2)	R76PI2680(1)30(2)
630	400	0.068	9.0	12.5	18.0	15.0	3,000	3,780,000	204	10	16	5.0	50	76PI2680(1)70(2)	R76PI2680(1)70(2)
630	400	0.082	7.5	13.5	18.0	15.0	3,000	3,780,000	246	10	14	5.4	51	76PI2820(1)50(2)	R76PI2820(1)50(2)
630	400	0.082	8.5	14.5	18.0	15.0	3,000	3,780,000	246	10	14	5.6	48	76PI2820(1)30(2)	R76PI2820(1)30(2)
630	400	0.082	13.0	12.0	18.0	15.0	3,000	3,780,000	246	10	14	5.7	45	76PI2820(1)70(2)	R76PI2820(1)70(2)
630	400	0.1	8.5	14.5	18.0	15.0	3,000	3,780,000	300	10	11	6.1	48	76PI3100(1)50(2)	R76PI3100(1)50(2)
630	400	0.1	10.0	16.0	18.0	15.0	3,000	3,780,000	300	10	11	6.4	44	76PI3100(1)30(2)	R76PI3100(1)30(2)
630	400	0.12	10.0	16.0	18.0	15.0	3,000	3,780,000	360	10	13	5.8	44	76PI3120(1)50(2)	R76PI3120(1)50(2)
630	400	0.12	11.0	19.0	18.0	15.0	3,000	3,780,000	360	10	13	6.1	40	76PI3120(1)30(2)	R76PI3120(1)30(2)
630	400	0.047	6.0	15.0	26.5	22.5	1,500	1,890,000	71	16	14	5.8	43	76PN2470(1)00(2)	R76PN2470(1)00(2)
630	400	0.056	6.0	15.0	26.5	22.5	1,500	1,890,000	84	16	20	4.8	43	76PN2560(1)00(2)	R76PN2560(1)00(2)
630	400	0.068	6.0	15.0	26.5	22.5	1,500	1,890,000	102	16	16	5.3	43	76PN2680(1)00(2)	R76PN2680(1)00(2)
630	400	0.082	6.0	15.0	26.5	22.5	1,500	1,890,000	123	16	14	5.8	43	76PN2820(1)30(2)	R76PN2820(1)30(2)
630	400	0.1	6.0	15.0	26.5	22.5	1,500	1,890,000	150	16	11	6.4	43	76PN3100(1)30(2)	R76PN3100(1)30(2)
VDC	VAC	Cap Value	T	H	L	Lead Spacing (S)	dV/dt (V/µs)	Max K_0 (V^2/µs)	A_{pk}	Lead Length 2x 4 mm	at 100 kHz	at 100 kHz 85°C	(°C/W)	KEMET Internal Part Number	Customer Part Number
									I_{pkr}	ESL	ESR max	$I_{rms\ max}$ (*)	R_{th}		

(1) Insert lead and packaging code. See Ordering Options Table for available options.
(2) H = 2.5% (only for C ≥ 1,000 pF), J = 5%, K = 10%
(*) I_{rms} value that leads to a ΔT of ≈ 20°C in the hot spot > $T_{HS} = T_{AMB} + \Delta T$ = 85°C + 20°C = 105°C

Table 1 – Ratings & Part Number Reference cont.

VDC	VAC	Cap Value (µF)	Dimensions in mm			Lead Spacing (S)	dV/dt (V/µs)	Max K_0 (V^2/µs)	I_{pkr}	ESL	ESR max	$I_{rms\ max}$ (*)	Rth	KEMET Internal Part Number	Customer Part Number
										Lead Length 2x 4 mm	at 100 kHz	at 100 kHz 85°C			
			T	H	L				A_{pk}	nH	mΩ	A_{rms}	(°C/W)		
630	400	0.12	6.0	15.0	26.5	22.5	1,500	1,890,000	180	16	20	4.8	43	76PN3120(1)50(2)	R76PN3120(1)50(2)
630	400	0.12	7.0	16.0	26.5	22.5	1,500	1,890,000	180	16	20	4.9	41	76PN3120(1)30(2)	R76PN3120(1)30(2)
630	400	0.15	7.0	16.0	26.5	22.5	1,500	1,890,000	225	16	16	5.5	41	76PN3150(1)50(2)	R76PN3150(1)50(2)
630	400	0.15	8.5	17.0	26.5	22.5	1,500	1,890,000	225	16	16	5.7	38	76PN3150(1)30(2)	R76PN3150(1)30(2)
630	400	0.18	8.5	17.0	26.5	22.5	1,500	1,890,000	270	16	13	6.3	38	76PN3180(1)30(2)	R76PN3180(1)30(2)
630	400	0.22	8.5	17.0	26.5	22.5	1,500	1,890,000	330	16	11	6.9	38	76PN3220(1)50(2)	R76PN3220(1)50(2)
630	400	0.22	10.0	18.5	26.5	22.5	1,500	1,890,000	330	16	11	7.2	36	76PN3220(1)30(2)	R76PN3220(1)30(2)
630	400	0.27	10.0	18.5	26.5	22.5	1,500	1,890,000	405	16	9	7.9	36	76PN3270(1)50(2)	R76PN3270(1)50(2)
630	400	0.27	11.0	20.0	26.5	22.5	1,500	1,890,000	405	16	9	8.2	34	76PN3270(1)30(2)	R76PN3270(1)30(2)
630	400	0.33	11.0	20.0	26.5	22.5	1,500	1,890,000	495	16	7	9.0	34	76PN3330(1)30(2)	R76PN3330(1)30(2)
630	400	0.39	11.0	20.0	26.5	22.5	1,500	1,890,000	585	16	8	8.5	34	76PN3390(1)50(2)	R76PN3390(1)50(2)
630	400	0.39	13.0	22.0	26.5	22.5	1,500	1,890,000	585	16	8	8.8	31	76PN3390(1)30(2)	R76PN3390(1)30(2)
630	400	0.47	13.0	22.0	26.5	22.5	1,500	1,890,000	705	16	7	9.7	31	76PN3470(1)50(2)	R76PN3470(1)50(2)
630	400	0.56	14.5	29.5	26.5	22.5	1,500	1,890,000	840	16	6	11.4	27	76PN3560(1)30(2)	R76PN3560(1)30(2)
630	400	0.15	9.0	17.0	32.0	27.5	900	1,134,000	135	18	16	6.0	35	76PR3150(1)30(2)	R76PR3150(1)30(2)
630	400	0.18	9.0	17.0	32.0	27.5	900	1,134,000	162	18	13	6.6	35	76PR3180(1)30(2)	R76PR3180(1)30(2)
630	400	0.22	9.0	17.0	32.0	27.5	900	1,134,000	198	18	11	7.3	35	76PR3220(1)30(2)	R76PR3220(1)30(2)
630	400	0.27	9.0	17.0	32.0	27.5	900	1,134,000	243	18	9	8.0	35	76PR3270(1)30(2)	R76PR3270(1)30(2)
630	400	0.33	11.0	20.0	32.0	27.5	900	1,134,000	297	18	7	9.4	31	76PR3330(1)40(2)	R76PR3330(1)40(2)
630	400	0.39	11.0	20.0	32.0	27.5	900	1,134,000	351	18	8	8.8	31	76PR3390(1)30(2)	R76PR3390(1)30(2)
630	400	0.39	24.0	15.0	32.0	27.5	900	1,134,000	351	18	8	9.5	27	76PR3390(1)L0(2)	R76PR3390(1)L0(2)
630	400	0.47	13.0	22.0	32.0	27.5	900	1,134,000	423	18	7	10.1	29	76PR3470(1)30(2)	R76PR3470(1)30(2)
630	400	0.47	24.0	15.0	32.0	27.5	900	1,134,000	423	18	7	10.4	27	76PR3470(1)L0(2)	R76PR3470(1)L0(2)
630	400	0.56	13.0	22.0	32.0	27.5	900	1,134,000	504	18	6	11.0	29	76PR3560(1)30(2)	R76PR3560(1)30(2)
630	400	0.56	24.0	15.0	32.0	27.5	900	1,134,000	504	18	6	11.4	27	76PR3560(1)L0(2)	R76PR3560(1)L0(2)
630	400	0.68	13.0	25.0	32.0	27.5	900	1,134,000	612	18	7	10.1	28	76PR3680(1)40(2)	R76PR3680(1)40(2)
630	400	0.68	24.0	15.0	32.0	27.5	900	1,134,000	612	18	7	10.2	27	76PR3680(1)L0(2)	R76PR3680(1)L0(2)
630	400	0.82	14.0	28.0	32.0	27.5	900	1,134,000	738	18	6	11.5	26	76PR3820(1)30(2)	R76PR3820(1)30(2)
630	400	1	16.0	30.0	32.0	27.5	900	1,134,000	900	18	6	12.1	25	76PR4100(1)40(2)	R76PR4100(1)40(2)
630	400	1	18.0	33.0	32.0	27.5	900	1,134,000	900	18	5.6	12.5	23	76PR4100(1)30(2)	R76PR4100(1)30(2)
630	400	1.2	18.0	33.0	32.0	27.5	900	1,134,000	1,080	18	5.3	12.8	23	76PR4120(1)30(2)	R76PR4120(1)30(2)
630	400	1.5	22.0	37.0	32.0	27.5	900	1,134,000	1,350	18	4.2	15.1	21	76PR4150(1)30(2)	R76PR4150(1)30(2)
630	400	1.8	22.0	37.0	32.0	27.5	900	1,134,000	1,620	18	5.3	13.5	21	76PR4180(1)30(2)	R76PR4180(1)30(2)
630	400	0.33	11.0	22.0	41.5	37.5	450	567,000	149	20	7	10.1	27	76PW3330(1)30(2)	R76PW3330(1)30(2)
630	400	0.39	11.0	22.0	41.5	37.5	450	567,000	176	20	8	9.5	27	76PW3390(1)30(2)	R76PW3390(1)30(2)
630	400	0.47	11.0	22.0	41.5	37.5	450	567,000	212	20	7	10.4	27	76PW3470(1)30(2)	R76PW3470(1)30(2)
630	400	0.56	11.0	22.0	41.5	37.5	450	567,000	252	20	6	11.4	27	76PW3560(1)30(2)	R76PW3560(1)30(2)
630	400	0.68	11.0	22.0	41.5	37.5	450	567,000	306	20	7	10.3	27	76PW3680(1)30(2)	R76PW3680(1)30(2)
630	400	0.68	24.0	15.0	41.5	37.5	450	567,000	306	20	7	10.8	24	76PW3680(1)L0(2)	R76PW3680(1)L0(2)
630	400	0.82	13.0	24.0	41.5	37.5	450	567,000	369	20	6	11.7	25	76PW3820(1)30(2)	R76PW3820(1)30(2)
630	400	0.82	24.0	15.0	41.5	37.5	450	567,000	369	20	6	11.9	24	76PW3820(1)L0(2)	R76PW3820(1)L0(2)
630	400	1	16.0	28.5	41.5	37.5	450	567,000	450	20	6	12.6	23	76PW4100(1)30(2)	R76PW4100(1)30(2)
630	400	1	24.0	15.0	41.5	37.5	450	567,000	450	20	6	12.1	24	76PW4100(1)L0(2)	R76PW4100(1)L0(2)
630	400	1.2	16.0	28.5	41.5	37.5	450	567,000	540	20	5	12.9	23	76PW4120(1)30(2)	R76PW4120(1)30(2)
630	400	1.2	24.0	19.0	41.5	37.5	450	567,000	540	20	5	12.8	23	76PW4120(1)L0(2)	R76PW4120(1)L0(2)
630	400	1.5	16.0	28.5	41.5	37.5	450	567,000	675	20	4	14.5	23	76PW4150(1)30(2)	R76PW4150(1)30(2)
630	400	1.5	24.0	19.0	41.5	37.5	450	567,000	675	20	4	14.4	23	76PW4150(1)L0(2)	R76PW4150(1)L0(2)
630	400	1.8	19.0	32.0	41.5	37.5	450	567,000	810	20	5.3	13.5	21	76PW4180(1)30(2)	R76PW4180(1)30(2)
VDC	VAC	Cap Value	T	H	L	Lead Spacing (S)	dV/dt (V/µs)	Max K_0 (V^2/µs)	A_{pk}	Lead Length 2x 4 mm	at 100 kHz	at 100 kHz 85°C	(°C/W)	KEMET Internal Part Number	Customer Part Number
									I_{pkr}	ESL	ESR max	$I_{rms\ max}$ (*)	R_{th}		

(1) Insert lead and packaging code. See Ordering Options Table for available options.
(2) H = 2.5% (only for C ≥ 1,000 pF), J = 5%, K = 10%
(*) I_{rms} value that leads to a ΔT of ≈ 20°C in the hot spot > $T_{HS} = T_{AMB} + \Delta T$ = 85°C + 20°C = 105°C

Table 1 – Ratings & Part Number Reference cont.

VDC	VAC	Cap Value (µF)	Dimensions in mm			Lead Spacing (S)	dV/dt (V/µs)	Max K_0 (V^2/µs)	I_{pkr}	ESL	ESR max	$I_{rms\ max}$ (*)	Rth	KEMET Internal Part Number	Customer Part Number
										Lead Length 2x 4 mm	at 100 kHz	at 100 kHz 85°C			
			T	H	L				A_{pk}	nH	mΩ	A_{rms}	(°C/W)		
630	400	2.2	20.0	40.0	41.5	37.5	450	567,000	990	20	4.3	15.7	19	76PW4220(1)30(2)	R76PW4220(1)30(2)
630	400	2.7	20.0	40.0	41.5	37.5	450	567,000	1,215	20	7.1	12.3	19	76PW4270(1)30(2)	R76PW4270(1)30(2)
630	400	3.3	24.0	44.0	41.5	37.5	450	567,000	1,485	20	5.8	14.2	17	76PW4330(1)30(2)	R76PW4330(1)30(2)
630	400	3.9	30.0	45.0	41.5	37.5	450	567,000	1,755	20	4.9	16.0	16	76PW4390(1)30(2)	R76PW4390(1)30(2)
1,000	400	0.00022	3.0	8.0	10.0	7.5	6,000	12,000,000	1	8	2,894	0.1	98	76QD0220(1)00(2)	R76QD0220(1)00(2)
1,000	400	0.00027	3.0	8.0	10.0	7.5	6,000	12,000,000	2	8	2,358	0.1	98	76QD0270(1)00(2)	R76QD0270(1)00(2)
1,000	400	0.00033	3.0	8.0	10.0	7.5	6,000	12,000,000	2	8	1,929	0.1	98	76QD0330(1)00(2)	R76QD0330(1)00(2)
1,000	400	0.00039	3.0	8.0	10.0	7.5	6,000	12,000,000	2	8	1,632	0.1	98	76QD0390(1)00(2)	R76QD0390(1)00(2)
1,000	400	0.00047	3.0	8.0	10.0	7.5	6,000	12,000,000	3	8	1,355	0.1	98	76QD0470(1)00(2)	R76QD0470(1)00(2)
1,000	400	0.00056	3.0	8.0	10.0	7.5	6,000	12,000,000	3	8	1,137	0.1	98	76QD0560(1)00(2)	R76QD0560(1)00(2)
1,000	400	0.00068	4.0	9.0	10.0	7.5	6,000	12,000,000	4	8	936	0.2	88	76QD0680(1)40(2)	R76QD0680(1)40(2)
1,000	400	0.00082	4.0	9.0	10.0	7.5	6,000	12,000,000	5	8	776	0.2	88	76QD0820(1)40(2)	R76QD0820(1)40(2)
1,000	400	0.001	4.0	9.0	10.0	7.5	6,000	12,000,000	6	8	637	0.3	88	76QD1100(1)40(2)	R76QD1100(1)40(2)
1,000	400	0.0012	4.0	9.0	10.0	7.5	6,000	12,000,000	7	8	531	0.3	88	76QD1120(1)40(2)	R76QD1120(1)40(2)
1,000	400	0.0015	5.0	10.5	10.0	7.5	6,000	12,000,000	9	8	424	0.4	78	76QD1150(1)40(2)	R76QD1150(1)40(2)
1,000	400	0.0018	5.0	10.5	10.0	7.5	6,000	12,000,000	11	8	354	0.5	78	76QD1180(1)40(2)	R76QD1180(1)40(2)
1,000	400	0.0022	5.0	10.5	10.0	7.5	6,000	12,000,000	13	8	289	0.6	78	76QD1220(1)40(2)	R76QD1220(1)40(2)
1,000	400	0.0027	6.0	12.0	10.5	7.5	6,000	12,000,000	16	8	236	0.7	69	76QD1270(1)00(2)	R76QD1270(1)00(2)
1,000	400	0.0033	6.0	12.0	10.5	7.5	6,000	12,000,000	20	8	193	0.8	69	76QD1330(1)00(2)	R76QD1330(1)00(2)
1,000	600	0.00047	4.0	9.0	13.0	10.0	6,500	13,000,000	3	9	1,355	0.2	79	76QF0470(1)00(2)	R76QF0470(1)00(2)
1,000	600	0.00056	4.0	9.0	13.0	10.0	6,500	13,000,000	4	9	1,137	0.2	79	76QF0560(1)00(2)	R76QF0560(1)00(2)
1,000	600	0.00068	4.0	9.0	13.0	10.0	6,500	13,000,000	4	9	936	0.3	79	76QF0680(1)00(2)	R76QF0680(1)00(2)
1,000	600	0.00082	4.0	9.0	13.0	10.0	6,500	13,000,000	5	9	776	0.3	79	76QF0820(1)00(2)	R76QF0820(1)00(2)
1,000	600	0.001	4.0	9.0	13.0	10.0	6,500	13,000,000	7	9	637	0.4	79	76QF1100(1)00(2)	R76QF1100(1)00(2)
1,000	600	0.0012	4.0	9.0	13.0	10.0	6,500	13,000,000	8	9	531	0.5	79	76QF1120(1)00(2)	R76QF1120(1)00(2)
1,000	600	0.0015	4.0	9.0	13.0	10.0	6,500	13,000,000	10	9	424	0.6	79	76QF1150(1)00(2)	R76QF1150(1)00(2)
1,000	600	0.0018	4.0	9.0	13.0	10.0	6,500	13,000,000	12	9	354	0.7	79	76QF1180(1)00(2)	R76QF1180(1)00(2)
1,000	600	0.0022	4.0	9.0	13.0	10.0	6,500	13,000,000	14	9	289	0.8	79	76QF1220(1)00(2)	R76QF1220(1)00(2)
1,000	600	0.0027	4.0	9.0	13.0	10.0	6,500	13,000,000	18	9	236	1.0	79	76QF1270(1)00(2)	R76QF1270(1)00(2)
1,000	600	0.0033	4.0	9.0	13.0	10.0	6,500	13,000,000	21	9	193	1.1	79	76QF1330(1)30(2)	R76QF1330(1)30(2)
1,000	600	0.0039	4.0	9.0	13.0	10.0	6,500	13,000,000	25	9	163	1.2	79	76QF1390(1)50(2)	R76QF1390(1)50(2)
1,000	600	0.0039	5.0	11.0	13.0	10.0	6,500	13,000,000	25	9	163	1.3	69	76QF1390(1)30(2)	R76QF1390(1)30(2)
1,000	600	0.0047	4.0	9.0	13.0	10.0	6,500	13,000,000	31	9	135	1.4	79	76QF1470(1)50(2)	R76QF1470(1)50(2)
1,000	600	0.0047	5.0	11.0	13.0	10.0	6,500	13,000,000	31	9	135	1.5	69	76QF1470(1)30(2)	R76QF1470(1)30(2)
1,000	600	0.0056	4.0	9.0	13.0	10.0	6,500	13,000,000	36	9	114	1.5	79	76QF1560(1)50(2)	R76QF1560(1)50(2)
1,000	600	0.0056	6.0	12.0	13.0	10.0	6,500	13,000,000	36	9	114	1.7	64	76QF1560(1)30(2)	R76QF1560(1)30(2)
1,000	600	0.0068	4.0	9.0	13.0	10.0	6,500	13,000,000	44	9	94	1.6	79	76QF1680(1)50(2)	R76QF1680(1)50(2)
1,000	600	0.0068	6.0	12.0	13.0	10.0	6,500	13,000,000	44	9	94	1.8	64	76QF1680(1)30(2)	R76QF1680(1)30(2)
1,000	600	0.0082	5.0	11.0	13.0	10.0	6,500	13,000,000	53	9	78	1.9	69	76QF1820(1)50(2)	R76QF1820(1)50(2)
1,000	600	0.01	5.0	11.0	13.0	10.0	6,500	13,000,000	65	9	64	2.1	69	76QF2100(1)50(2)	R76QF2100(1)50(2)
1,000	600	0.012	5.0	11.0	13.0	10.0	6,500	13,000,000	78	9	53	2.3	69	76QF2120(1)50(2)	R76QF2120(1)50(2)
1,000	600	0.015	6.0	12.0	13.0	10.0	6,500	13,000,000	98	9	42	2.7	64	76QF2150(1)50(2)	R76QF2150(1)50(2)
1,000	600	0.0082	4.0	10.0	18.0	15.0	3,500	7,000,000	29	10	78	2.0	65	76QI1820(1)40(2)	R76QI1820(1)40(2)
1,000	600	0.0082	5.0	11.0	18.0	15.0	3,500	7,000,000	29	10	78	2.1	60	76QI1820(1)00(2)	R76QI1820(1)00(2)
1,000	600	0.01	4.0	10.0	18.0	15.0	3,500	7,000,000	35	10	64	2.2	65	76QI2100(1)40(2)	R76QI2100(1)40(2)
1,000	600	0.01	5.0	11.0	18.0	15.0	3,500	7,000,000	35	10	64	2.3	60	76QI2100(1)30(2)	R76QI2100(1)30(2)
1,000	600	0.012	5.0	11.0	18.0	15.0	3,500	7,000,000	42	10	53	2.5	60	76QI2120(1)30(2)	R76QI2120(1)30(2)
1,000	600	0.015	5.0	11.0	18.0	15.0	3,500	7,000,000	53	10	42	2.8	60	76QI2150(1)40(2)	R76QI2150(1)40(2)
VDC	VAC	Cap Value	T	H	L	Lead Spacing (S)	dV/dt (V/µs)	Max K_0 (V^2/µs)	A_{pk}	Lead Length 2x 4 mm	at 100 kHz	at 100 kHz 85°C	(°C/W)	KEMET Internal Part Number	Customer Part Number
									I_{pkr}	ESL	ESR max	$I_{rms\ max}$ (*)	R_{th}		

(1) Insert lead and packaging code. See Ordering Options Table for available options.
(2) H = 2.5% (only for C ≥ 1,000 pF), J = 5%, K = 10%
(*) I_{rms} value that leads to a ΔT of ≈ 20°C in the hot spot > $T_{HS} = T_{AMB} + \Delta T$ = 85°C + 20°C = 105°C

Table 1 – Ratings & Part Number Reference cont.

VDC	VAC	Cap Value (µF)	Dimensions in mm			Lead Spacing (S)	dV/dt (V/µs)	Max K_0 (V^2/µs)	I_{pkr}	ESL	ESR max	$I_{rms\ max}$ (*)	Rth	KEMET Internal Part Number	Customer Part Number
										Lead Length 2x 4 mm	at 100 kHz	at 100 kHz 85°C			
			T	H	L				A_{pk}	nH	mΩ	A_{rms}	(°C/W)		
1,000	600	0.018	5.0	11.0	18.0	15.0	3,500	7,000,000	63	10	35	3.1	60	76QI2180(1)40(2)	R76QI2180(1)40(2)
1,000	600	0.022	6.0	12.0	18.0	15.0	3,500	7,000,000	77	10	29	3.5	56	76QI2220(1)40(2)	R76QI2220(1)40(2)
1,000	600	0.022	9.0	12.5	18.0	15.0	3,500	7,000,000	77	10	29	3.7	50	76QI2220(1)70(2)	R76QI2220(1)70(2)
1,000	600	0.027	6.0	12.0	18.0	15.0	3,500	7,000,000	95	10	24	3.9	56	76QI2270(1)50(2)	R76QI2270(1)50(2)
1,000	600	0.027	7.5	13.5	18.0	15.0	3,500	7,000,000	95	10	24	4.1	51	76QI2270(1)40(2)	R76QI2270(1)40(2)
1,000	600	0.027	9.0	12.5	18.0	15.0	3,500	7,000,000	95	10	24	4.1	50	76QI2270(1)70(2)	R76QI2270(1)70(2)
1,000	600	0.033	6.0	12.0	18.0	15.0	3,500	7,000,000	116	10	19	4.3	56	76QI2330(1)50(2)	R76QI2330(1)50(2)
1,000	600	0.033	7.5	13.5	18.0	15.0	3,500	7,000,000	116	10	19	4.5	51	76QI2330(1)40(2)	R76QI2330(1)40(2)
1,000	600	0.033	13.0	12.0	18.0	15.0	3,500	7,000,000	116	10	19	4.8	45	76QI2330(1)70(2)	R76QI2330(1)70(2)
1,000	600	0.039	7.5	13.5	18.0	15.0	3,500	7,000,000	137	10	16	4.9	51	76QI2390(1)50(2)	R76QI2390(1)50(2)
1,000	600	0.039	8.5	14.5	18.0	15.0	3,500	7,000,000	137	10	16	5.1	48	76QI2390(1)40(2)	R76QI2390(1)40(2)
1,000	600	0.047	7.5	13.5	18.0	15.0	3,500	7,000,000	165	10	14	5.4	51	76QI2470(1)50(2)	R76QI2470(1)50(2)
1,000	600	0.047	8.5	14.5	18.0	15.0	3,500	7,000,000	165	10	14	5.6	48	76QI2470(1)40(2)	R76QI2470(1)40(2)
1,000	600	0.056	8.5	14.5	18.0	15.0	3,500	7,000,000	196	10	20	4.6	48	76QI2560(1)50(2)	R76QI2560(1)50(2)
1,000	600	0.068	8.5	14.5	18.0	15.0	3,500	7,000,000	238	10	16	5.1	48	76QI2680(1)50(2)	R76QI2680(1)50(2)
1,000	600	0.082	10.0	16.0	18.0	15.0	3,500	7,000,000	287	10	14	5.8	44	76QI2820(1)50(2)	R76QI2820(1)50(2)
1,000	600	0.1	11.0	19.0	18.0	15.0	3,500	7,000,000	350	10	11	6.7	40	76QI3100(1)50(2)	R76QI3100(1)50(2)
1,000	600	0.12	11.0	19.0	18.0	15.0	3,500	7,000,000	420	10	13	6.1	40	76QI3120(1)50(2)	R76QI3120(1)50(2)
1,000	600	0.027	6.0	15.0	26.5	22.5	2,100	4,200,000	57	16	24	4.4	43	76QN2270(1)00(2)	R76QN2270(1)00(2)
1,000	600	0.033	6.0	15.0	26.5	22.5	2,100	4,200,000	69	16	19	4.9	43	76QN2330(1)30(2)	R76QN2330(1)30(2)
1,000	600	0.039	6.0	15.0	26.5	22.5	2,100	4,200,000	82	16	16	5.3	43	76QN2390(1)30(2)	R76QN2390(1)30(2)
1,000	600	0.047	6.0	15.0	26.5	22.5	2,100	4,200,000	99	16	14	5.8	43	76QN2470(1)50(2)	R76QN2470(1)50(2)
1,000	600	0.047	7.0	16.0	26.5	22.5	2,100	4,200,000	99	16	14	6.0	41	76QN2470(1)30(2)	R76QN2470(1)30(2)
1,000	600	0.056	6.0	15.0	26.5	22.5	2,100	4,200,000	118	16	20	4.8	43	76QN2560(1)50(2)	R76QN2560(1)50(2)
1,000	600	0.056	7.0	16.0	26.5	22.5	2,100	4,200,000	118	16	20	4.9	41	76QN2560(1)30(2)	R76QN2560(1)30(2)
1,000	600	0.068	7.0	16.0	26.5	22.5	2,100	4,200,000	143	16	16	5.5	41	76QN2680(1)50(2)	R76QN2680(1)50(2)
1,000	600	0.068	8.5	17.0	26.5	22.5	2,100	4,200,000	143	16	16	5.6	38	76QN2680(1)30(2)	R76QN2680(1)30(2)
1,000	600	0.082	7.0	16.0	26.5	22.5	2,100	4,200,000	172	16	14	6.0	41	76QN2820(1)50(2)	R76QN2820(1)50(2)
1,000	600	0.082	10.0	18.5	26.5	22.5	2,100	4,200,000	172	16	14	6.4	36	76QN2820(1)30(2)	R76QN2820(1)30(2)
1,000	600	0.1	8.5	17.0	26.5	22.5	2,100	4,200,000	210	16	11	6.8	38	76QN3100(1)50(2)	R76QN3100(1)50(2)
1,000	600	0.1	10.0	18.5	26.5	22.5	2,100	4,200,000	210	16	11	7.1	36	76QN3100(1)30(2)	R76QN3100(1)30(2)
1,000	600	0.12	8.5	17.0	26.5	22.5	2,100	4,200,000	252	16	20	5.1	38	76QN3120(1)50(2)	R76QN3120(1)50(2)
1,000	600	0.12	11.0	20.0	26.5	22.5	2,100	4,200,000	252	16	20	5.4	34	76QN3120(1)30(2)	R76QN3120(1)30(2)
1,000	600	0.15	10.0	18.5	26.5	22.5	2,100	4,200,000	315	16	16	5.9	36	76QN3150(1)50(2)	R76QN3150(1)50(2)
1,000	600	0.15	13.0	22.0	26.5	22.5	2,100	4,200,000	315	16	16	6.3	31	76QN3150(1)30(2)	R76QN3150(1)30(2)
1,000	600	0.18	11.0	20.0	26.5	22.5	2,100	4,200,000	378	16	13	6.7	34	76QN3180(1)50(2)	R76QN3180(1)50(2)
1,000	600	0.22	11.0	20.0	26.5	22.5	2,100	4,200,000	462	16	11	7.4	34	76QN3220(1)50(2)	R76QN3220(1)50(2)
1,000	600	0.27	13.0	22.0	26.5	22.5	2,100	4,200,000	567	16	9	8.5	31	76QN3270(1)50(2)	R76QN3270(1)50(2)
1,000	600	0.33	13.0	22.0	26.5	22.5	2,100	4,200,000	693	16	7	9.4	31	76QN3330(1)50(2)	R76QN3330(1)50(2)
1,000	600	0.39	14.5	29.5	26.5	22.5	2,100	4,200,000	819	16	8	9.5	27	76QN3390(1)50(2)	R76QN3390(1)50(2)
1,000	600	0.1	9.0	17.0	32.0	27.5	1,000	2,000,000	100	18	11	7.2	35	76QR3100(1)40(2)	R76QR3100(1)40(2)
1,000	600	0.12	9.0	17.0	32.0	27.5	1,000	2,000,000	120	18	20	5.4	35	76QR3120(1)40(2)	R76QR3120(1)40(2)
1,000	600	0.15	11.0	20.0	32.0	27.5	1,000	2,000,000	150	18	16	6.3	31	76QR3150(1)30(2)	R76QR3150(1)30(2)
1,000	600	0.18	13.0	22.0	32.0	27.5	1,000	2,000,000	180	18	13	7.2	29	76QR3180(1)30(2)	R76QR3180(1)30(2)
1,000	600	0.18	24.0	15.0	32.0	27.5	1,000	2,000,000	180	18	13	7.5	27	76QR3180(1)L0(2)	R76QR3180(1)L0(2)
1,000	600	0.22	13.0	22.0	32.0	27.5	1,000	2,000,000	220	18	11	8.0	29	76QR3220(1)30(2)	R76QR3220(1)30(2)
1,000	600	0.22	24.0	15.0	32.0	27.5	1,000	2,000,000	220	18	11	8.2	27	76QR3220(1)L0(2)	R76QR3220(1)L0(2)
1,000	600	0.27	13.0	25.0	32.0	27.5	1,000	2,000,000	270	18	9	9.0	28	76QR3270(1)40(2)	R76QR3270(1)40(2)
VDC	VAC	Cap Value	T	H	L	Lead Spacing (S)	dV/dt (V/µs)	Max K_0 (V^2/µs)	A_{pk}	Lead Length 2x 4 mm	at 100 kHz	at 100 kHz 85°C	(°C/W)	KEMET Internal Part Number	Customer Part Number
									I_{pkr}	ESL	ESR max	$I_{rms\ max}$ (*)	R_{th}		

(1) Insert lead and packaging code. See Ordering Options Table for available options.
(2) H = 2.5% (only for C ≥ 1,000 pF), J = 5%, K = 10%
(*) I_{rms} value that leads to a ΔT of ≈ 20°C in the hot spot > $T_{HS} = T_{AMB} + \Delta T$ = 85°C + 20°C = 105°C

Table 1 – Ratings & Part Number Reference cont.

VDC	VAC	Cap Value (µF)	Dimensions in mm			Lead Spacing (S)	dV/dt (V/µs)	Max K_0 (V^2/µs)	I_{pkr}	ESL Lead Length 2x 4 mm	ESR max at 100 kHz	$I_{rms\ max}$ (*) at 100 kHz 85°C	Rth	KEMET Internal Part Number	Customer Part Number
			T	H	L				A_{pk}	nH	mΩ	A_{rms}	(°C/W)		
1,000	600	0.27	24.0	15.0	32.0	27.5	1,000	2,000,000	270	18	9	9.1	27	76QR3270(1)L0(2)	R76QR3270(1)L0(2)
1,000	600	0.33	14.0	28.0	32.0	27.5	1,000	2,000,000	330	18	7	10.3	26	76QR3330(1)30(2)	R76QR3330(1)30(2)
1,000	600	0.39	18.0	33.0	32.0	27.5	1,000	2,000,000	390	18	8	10.3	23	76QR3390(1)30(2)	R76QR3390(1)30(2)
1,000	600	0.47	18.0	33.0	32.0	27.5	1,000	2,000,000	470	18	7	11.3	23	76QR3470(1)30(2)	R76QR3470(1)30(2)
1,000	600	0.56	22.0	37.0	32.0	27.5	1,000	2,000,000	560	18	6	13.0	21	76QR3560(1)30(2)	R76QR3560(1)30(2)
1,000	600	0.68	22.0	37.0	32.0	27.5	1,000	2,000,000	680	18	7	11.7	21	76QR3680(1)30(2)	R76QR3680(1)30(2)
1,000	600	0.18	11.0	22.0	41.5	37.5	500	1,000,000	90	20	13	7.5	27	76QW3180(1)30(2)	R76QW3180(1)30(2)
1,000	600	0.22	11.0	22.0	41.5	37.5	500	1,000,000	110	20	11	8.2	27	76QW3220(1)30(2)	R76QW3220(1)30(2)
1,000	600	0.27	13.0	24.0	41.5	37.5	500	1,000,000	135	20	9	9.5	25	76QW3270(1)30(2)	R76QW3270(1)30(2)
1,000	600	0.27	24.0	15.0	41.5	37.5	500	1,000,000	135	20	9	9.6	24	76QW3270(1)L0(2)	R76QW3270(1)L0(2)
1,000	600	0.33	13.0	24.0	41.5	37.5	500	1,000,000	165	20	7	10.5	25	76QW3330(1)30(2)	R76QW3330(1)30(2)
1,000	600	0.33	24.0	15.0	41.5	37.5	500	1,000,000	165	20	7	10.6	24	76QW3330(1)L0(2)	R76QW3330(1)L0(2)
1,000	600	0.39	16.0	28.5	41.5	37.5	500	1,000,000	195	20	8	10.4	23	76QW3390(1)30(2)	R76QW3390(1)30(2)
1,000	600	0.39	24.0	15.0	41.5	37.5	500	1,000,000	195	20	8	10.0	24	76QW3390(1)L0(2)	R76QW3390(1)L0(2)
1,000	600	0.47	16.0	28.5	41.5	37.5	500	1,000,000	235	20	7	11.4	23	76QW3470(1)30(2)	R76QW3470(1)30(2)
1,000	600	0.47	24.0	19.0	41.5	37.5	500	1,000,000	235	20	7	11.4	23	76QW3470(1)L0(2)	R76QW3470(1)L0(2)
1,000	600	0.56	16.0	28.5	41.5	37.5	500	1,000,000	280	20	6	12.5	23	76QW3560(1)30(2)	R76QW3560(1)30(2)
1,000	600	0.56	24.0	19.0	41.5	37.5	500	1,000,000	280	20	6	12.4	23	76QW3560(1)L0(2)	R76QW3560(1)L0(2)
1,000	600	0.68	19.0	32.0	41.5	37.5	500	1,000,000	340	20	7	11.7	21	76QW3680(1)30(2)	R76QW3680(1)30(2)
1,000	600	0.82	20.0	40.0	41.5	37.5	500	1,000,000	410	20	6	13.5	19	76QW3820(1)30(2)	R76QW3820(1)30(2)
1,000	600	1	20.0	40.0	41.5	37.5	500	1,000,000	500	20	5.6	13.8	19	76QW4100(1)30(2)	R76QW4100(1)30(2)
1,000	600	1.2	24.0	44.0	41.5	37.5	500	1,000,000	600	20	5.3	14.8	17	76QW4120(1)30(2)	R76QW4120(1)30(2)
1,000	600	1.5	24.0	44.0	41.5	37.5	500	1,000,000	750	20	4.2	16.5	17	76QW4150(1)30(2)	R76QW4150(1)30(2)
1,000	600	1.8	30.0	45.0	41.5	37.5	500	1,000,000	900	20	5.3	15.3	16	76QW4180(1)30(2)	R76QW4180(1)30(2)
1,000	600	2.2	30.0	45.0	41.5	37.5	500	1,000,000	1,100	20	4.3	17.0	16	76QW4220(1)30(2)	R76QW4220(1)30(2)
1,600	650	0.0022	4.0	9.0	13.0	10.0	8000	25,600,000	18	9	289.4	0.9	79	76TF1220(1)50(2)	R76TF1220(1)50(2)
1,600	650	0.0027	4.0	9.0	13.0	10.0	8000	25,600,000	22	9	235.8	1.0	79	76TF1270(1)50(2)	R76TF1270(1)50(2)
1,600	650	0.0033	5.0	11.0	13.0	10.0	8000	25,600,000	26	9	192.9	1.2	69	76TF1330(1)50(2)	R76TF1330(1)50(2)
1,600	650	0.0039	5.0	11.0	13.0	10.0	8000	25,600,000	31	9	163.2	1.3	69	76TF1390(1)50(2)	R76TF1390(1)50(2)
1,600	650	0.0047	5.0	11.0	13.0	10.0	8000	25,600,000	38	9	135.5	1.5	69	76TF1470(1)50(2)	R76TF1470(1)50(2)
1,600	650	0.0056	6.0	12.0	13.0	10.0	8000	25,600,000	45	9	113.7	1.7	64	76TF1560(1)50(2)	R76TF1560(1)50(2)
1,600	650	0.0068	6.0	12.0	13.0	10.0	8000	25,600,000	54	9	93.6	1.8	64	76TF1680(1)50(2)	R76TF1680(1)50(2)
1,600	650	0.0033	4.0	10.0	18.0	15.0	6,000	19,200,000	20	10	193	1.3	65	76TI1330(1)40(2)	R76TI1330(1)40(2)
1,600	650	0.0033	5.0	11.0	18.0	15.0	6,000	19,200,000	20	10	193	1.3	60	76TI1330(1)30(2)	R76TI1330(1)30(2)
1,600	650	0.0039	4.0	10.0	18.0	15.0	6,000	19,200,000	23	10	163	1.4	65	76TI1390(1)40(2)	R76TI1390(1)40(2)
1,600	650	0.0039	5.0	11.0	18.0	15.0	6,000	19,200,000	23	10	163	1.4	60	76TI1390(1)30(2)	R76TI1390(1)30(2)
1,600	650	0.0047	4.0	10.0	18.0	15.0	6,000	19,200,000	28	10	135	1.5	65	76TI1470(1)40(2)	R76TI1470(1)40(2)
1,600	650	0.0047	5.0	11.0	18.0	15.0	6,000	19,200,000	28	10	135	1.6	60	76TI1470(1)30(2)	R76TI1470(1)30(2)
1,600	650	0.0056	4.0	10.0	18.0	15.0	6,000	19,200,000	34	10	114	1.6	65	76TI1560(1)40(2)	R76TI1560(1)40(2)
1,600	650	0.0056	5.0	11.0	18.0	15.0	6,000	19,200,000	34	10	114	1.7	60	76TI1560(1)30(2)	R76TI1560(1)30(2)
1,600	650	0.0068	5.0	11.0	18.0	15.0	6,000	19,200,000	41	10	94	1.9	60	76TI1680(1)30(2)	R76TI1680(1)30(2)
1,600	650	0.0082	5.0	11.0	18.0	15.0	6,000	19,200,000	49	10	78	2.1	60	76TI1820(1)40(2)	R76TI1820(1)40(2)
1,600	650	0.01	5.0	11.0	18.0	15.0	6,000	19,200,000	60	10	64	2.3	60	76TI2100(1)40(2)	R76TI2100(1)40(2)
1,600	650	0.012	6.0	12.0	18.0	15.0	6,000	19,200,000	72	10	53	2.6	56	76TI2120(1)40(2)	R76TI2120(1)40(2)
1,600	650	0.015	6.0	12.0	18.0	15.0	6,000	19,200,000	90	10	42	2.9	56	76TI2150(1)40(2)	R76TI2150(1)40(2)
1,600	650	0.018	7.5	13.5	18.0	15.0	6,000	19,200,000	108	10	35	3.3	51	76TI2180(1)40(2)	R76TI2180(1)40(2)
1,600	650	0.018	9.0	12.5	18.0	15.0	6,000	19,200,000	108	10	35	3.4	50	76TI2180(1)70(2)	R76TI2180(1)70(2)
1,600	650	0.022	7.5	13.5	18.0	15.0	6,000	19,200,000	132	10	29	3.7	51	76TI2220(1)40(2)	R76TI2220(1)40(2)
VDC	VAC	Cap Value	T	H	L	Lead Spacing (S)	dV/dt (V/µs)	Max K_0 (V^2/µs)	A_{pk} / I_{pkr}	Lead Length 2x 4 mm / ESL	at 100 kHz / ESR max	at 100 kHz 85°C / $I_{rms\ max}$ (*)	(°C/W) / R_{th}	KEMET Internal Part Number	Customer Part Number

(1) Insert lead and packaging code. See Ordering Options Table for available options.
(2) H = 2.5% (only for C ≥ 1,000 pF), J = 5%, K = 10%
(*) I_{rms} value that leads to a ΔT of ≈ 20°C in the hot spot > $T_{HS} = T_{AMB} + \Delta T$ = 85°C + 20°C = 105°C

Table 1 – Ratings & Part Number Reference cont.

VDC	VAC	Cap Value (µF)	Dimensions in mm			Lead Spacing (S)	dV/dt (V/µs)	Max K_0 (V^2/µs)	I_{pkr}	ESL Lead Length 2x 4 mm	ESR max at 100 kHz	$I_{rms\ max}$ (*) at 100 kHz 85°C	Rth	KEMET Internal Part Number	Customer Part Number
			T	H	L				A_{pk}	nH	mΩ	A_{rms}	(°C/W)		
1,600	650	0.022	13.0	12.0	18.0	15.0	6,000	19,200,000	132	10	29	3.9	45	76TI2220(1)70(2)	R76TI2220(1)70(2)
1,600	650	0.027	8.5	14.5	18.0	15.0	6,000	19,200,000	162	10	24	4.2	48	76TI2270(1)40(2)	R76TI2270(1)40(2)
1,600	650	0.033	8.5	14.5	18.0	15.0	6,000	19,200,000	198	10	19	4.7	48	76TI2330(1)40(2)	R76TI2330(1)40(2)
1,600	650	0.039	10.0	16.0	18.0	15.0	6,000	19,200,000	234	10	16.3	5.3	44	76TI2390(1)50(2)	R76TI2390(1)50(2)
1,600	650	0.047	11.0	19.0	18.0	15.0	6,000	19,200,000	282	10	13.5	6.1	40	76TI2470(1)50(2)	R76TI2470(1)50(2)
1,600	650	0.056	11.0	19.0	18.0	15.0	6,000	19,200,000	336	10	19.9	5.0	40	76TI2560(1)50(2)	R76TI2560(1)50(2)
1,600	650	0.015	6.0	15.0	26.5	22.5	3,000	9,600,000	45	16	42	3.3	43	76TN2150(1)30(2)	R76TN2150(1)30(2)
1,600	650	0.018	6.0	15.0	26.5	22.5	3,000	9,600,000	54	16	35	3.6	43	76TN2180(1)30(2)	R76TN2180(1)30(2)
1,600	650	0.022	6.0	15.0	26.5	22.5	3,000	9,600,000	66	16	29	4.0	43	76TN2220(1)30(2)	R76TN2220(1)30(2)
1,600	650	0.027	6.0	15.0	26.5	22.5	3,000	9,600,000	81	16	24	4.4	43	76TN2270(1)30(2)	R76TN2270(1)30(2)
1,600	650	0.033	6.0	15.0	26.5	22.5	3,000	9,600,000	99	16	19	4.9	43	76TN2330(1)40(2)	R76TN2330(1)40(2)
1,600	650	0.039	7.0	16.0	26.5	22.5	3,000	9,600,000	117	16	16	5.5	41	76TN2390(1)40(2)	R76TN2390(1)40(2)
1,600	650	0.047	7.0	16.0	26.5	22.5	3,000	9,600,000	141	16	14	6.0	41	76TN2470(1)40(2)	R76TN2470(1)40(2)
1,600	650	0.056	8.5	17.0	26.5	22.5	3,000	9,600,000	168	16	20	5.1	38	76TN2560(1)40(2)	R76TN2560(1)40(2)
1,600	650	0.068	10.0	18.5	26.5	22.5	3,000	9,600,000	204	16	16	5.8	36	76TN2680(1)40(2)	R76TN2680(1)40(2)
1,600	650	0.068	8.5	17.0	26.5	22.5	3,000	9,600,000	204	16	16.4	5.6	38	76TN2680(1)50(2)	R76TN2680(1)50(2)
1,600	650	0.082	10.0	18.5	26.5	22.5	3,000	9,600,000	246	16	14	6.4	36	76TN2820(1)40(2)	R76TN2820(1)40(2)
1,600	650	0.1	11.0	20.0	26.5	22.5	3,000	9,600,000	300	16	11	7.3	34	76TN3100(1)40(2)	R76TN3100(1)40(2)
1,600	650	0.12	13.0	22.0	26.5	22.5	3,000	9,600,000	360	16	20	5.7	31	76TN3120(1)40(2)	R76TN3120(1)40(2)
1,600	650	0.15	13.0	22.0	26.5	22.5	3,000	9,600,000	450	16	16	6.3	31	76TN3150(1)50(2)	R76TN3150(1)50(2)
1,600	650	0.18	14.5	29.5	26.5	22.5	3,000	9,600,000	540	16	13.3	7.4	27	76TN3180(1)50(2)	R76TN3180(1)50(2)
1,600	650	0.039	9.0	17.0	32.0	27.5	2,000	6,400,000	78	18	20	5.3	35	76TR2390(1)30(2)	R76TR2390(1)30(2)
1,600	650	0.047	9.0	17.0	32.0	27.5	2,000	6,400,000	94	18	17	5.8	35	76TR2470(1)30(2)	R76TR2470(1)30(2)
1,600	650	0.056	9.0	17.0	32.0	27.5	2,000	6,400,000	112	18	20	5.4	35	76TR2560(1)30(2)	R76TR2560(1)30(2)
1,600	650	0.068	9.0	17.0	32.0	27.5	2,000	6,400,000	136	18	16	5.9	35	76TR2680(1)30(2)	R76TR2680(1)30(2)
1,600	650	0.082	11.0	20.0	32.0	27.5	2,000	6,400,000	164	18	14	6.8	31	76TR2820(1)30(2)	R76TR2820(1)30(2)
1,600	650	0.1	11.0	20.0	32.0	27.5	2,000	6,400,000	200	18	11	7.6	31	76TR3100(1)30(2)	R76TR3100(1)30(2)
1,600	650	0.12	11.0	20.0	32.0	27.5	2,000	6,400,000	240	18	20	5.7	31	76TR3120(1)40(2)	R76TR3120(1)40(2)
1,600	650	0.12	13.0	22.0	32.0	27.5	2,000	6,400,000	240	18	20	5.9	29	76TR3120(1)30(2)	R76TR3120(1)30(2)
1,600	650	0.12	24.0	15.0	32.0	27.5	2,000	6,400,000	240	18	20	6.1	27	76TR3120(1)L0(2)	R76TR3120(1)L0(2)
1,600	650	0.15	13.0	22.0	32.0	27.5	2,000	6,400,000	300	18	16	6.6	29	76TR3150(1)50(2)	R76TR3150(1)50(2)
1,600	650	0.15	13.0	25.0	32.0	27.5	2,000	6,400,000	300	18	16	6.7	28	76TR3150(1)40(2)	R76TR3150(1)40(2)
1,600	650	0.15	24.0	15.0	32.0	27.5	2,000	6,400,000	300	18	16	6.8	27	76TR3150(1)L0(2)	R76TR3150(1)L0(2)
1,600	650	0.18	13.0	25.0	32.0	27.5	2,000	6,400,000	360	18	13	7.4	28	76TR3180(1)50(2)	R76TR3180(1)50(2)
1,600	650	0.18	14.0	28.0	32.0	27.5	2,000	6,400,000	360	18	13	7.6	26	76TR3180(1)40(2)	R76TR3180(1)40(2)
1,600	650	0.18	24.0	15.0	32.0	27.5	2,000	6,400,000	360	18	13	7.5	27	76TR3180(1)L0(2)	R76TR3180(1)L0(2)
1,600	650	0.22	14.0	28.0	32.0	27.5	2,000	6,400,000	440	18	11	8.4	26	76TR3220(1)40(2)	R76TR3220(1)40(2)
1,600	650	0.22	18.0	33.0	32.0	27.5	2,000	6,400,000	440	18	11	9.0	23	76TR3220(1)30(2)	R76TR3220(1)30(2)
1,600	650	0.27	18.0	33.0	32.0	27.5	2,000	6,400,000	540	18	9	9.9	23	76TR3270(1)30(2)	R76TR3270(1)30(2)
1,600	650	0.33	18.0	33.0	32.0	27.5	2,000	6,400,000	660	18	7	11.0	23	76TR3330(1)30(2)	R76TR3330(1)30(2)
1,600	650	0.39	22.0	37.0	32.0	27.5	2,000	6,400,000	780	18	8	10.9	21	76TR3390(1)30(2)	R76TR3390(1)30(2)
1,600	650	0.47	22.0	37.0	32.0	27.5	2,000	6,400,000	940	18	7	11.9	21	76TR3470(1)30(2)	R76TR3470(1)30(2)
1,600	650	0.082	11.0	22.0	41.5	37.5	1,200	3,840,000	98	20	14	7.4	27	76TW2820(1)30(2)	R76TW2820(1)30(2)
1,600	650	0.1	11.0	22.0	41.5	37.5	1,200	3,840,000	120	20	11	8.1	27	76TW3100(1)30(2)	R76TW3100(1)30(2)
1,600	650	0.12	11.0	22.0	41.5	37.5	1,200	3,840,000	144	20	20	6.1	27	76TW3120(1)30(2)	R76TW3120(1)30(2)
1,600	650	0.15	11.0	22.0	41.5	37.5	1,200	3,840,000	180	20	16	6.8	27	76TW3150(1)30(2)	R76TW3150(1)30(2)
1,600	650	0.18	13.0	24.0	41.5	37.5	1,200	3,840,000	216	20	13	7.7	25	76TW3180(1)30(2)	R76TW3180(1)30(2)
1,600	650	0.18	24.0	15.0	41.5	37.5	1,200	3,840,000	216	20	13	7.9	24	76TW3180(1)L0(2)	R76TW3180(1)L0(2)
VDC	VAC	Cap Value	T	H	L	Lead Spacing (S)	dV/dt (V/µs)	Max K_0 (V^2/µs)	A_{pk} / I_{pkr}	Lead Length 2x 4 mm / ESL	at 100 kHz / ESR max	at 100 kHz 85°C / $I_{rms\ max}$ (*)	(°C/W) / R_{th}	KEMET Internal Part Number	Customer Part Number

(1) Insert lead and packaging code. See Ordering Options Table for available options.
(2) H = 2.5% (only for C ≥ 1,000 pF), J = 5%, K = 10%
(*) I_{rms} value that leads to a ΔT of ≈ 20°C in the hot spot > $T_{HS} = T_{AMB} + \Delta T$ = 85°C + 20°C = 105°C

Table 1 – Ratings & Part Number Reference cont.

VDC	VAC	Cap Value (µF)	Dimensions in mm			Lead Spacing (S)	dV/dt (V/µs)	Max K_0 (V^2/µs)	I_{pkr}	ESL	ESR max	$I_{rms\ max}$ (*)	Rth	KEMET Internal Part Number	Customer Part Number
										Lead Length 2x 4 mm	at 100 kHz	at 100 kHz 85°C			
			T	H	L				A_{pk}	nH	mΩ	A_{rms}	(°C/W)		
1,600	650	0.22	13.0	24.0	41.5	37.5	1,200	3,840,000	264	20	11	8.5	25	76TW3220(1)30(2)	R76TW3220(1)30(2)
1,600	650	0.22	24.0	15.0	41.5	37.5	1,200	3,840,000	264	20	11	8.7	24	76TW3220(1)L0(2)	R76TW3220(1)L0(2)
1,600	650	0.27	13.0	24.0	41.5	37.5	1,200	3,840,000	324	20	9	9.5	25	76TW3270(1)30(2)	R76TW3270(1)30(2)
1,600	650	0.27	24.0	19.0	41.5	37.5	1,200	3,840,000	324	20	9	9.9	23	76TW3270(1)L0(2)	R76TW3270(1)L0(2)
1,600	650	0.33	16.0	28.5	41.5	37.5	1,200	3,840,000	396	20	7	11.1	23	76TW3330(1)30(2)	R76TW3330(1)30(2)
1,600	650	0.33	24.0	19.0	41.5	37.5	1,200	3,840,000	396	20	7	11.0	23	76TW3330(1)L0(2)	R76TW3330(1)L0(2)
1,600	650	0.39	16.0	28.5	41.5	37.5	1,200	3,840,000	468	20	8	10.4	23	76TW3390(1)30(2)	R76TW3390(1)30(2)
1,600	650	0.47	19.0	32.0	41.5	37.5	1,200	3,840,000	564	20	7	12.0	21	76TW3470(1)30(2)	R76TW3470(1)30(2)
1,600	650	0.56	20.0	40.0	41.5	37.5	1,200	3,840,000	672	20	6	13.7	19	76TW3560(1)30(2)	R76TW3560(1)30(2)
1,600	650	0.68	20.0	40.0	41.5	37.5	1,200	3,840,000	816	20	7	12.3	19	76TW3680(1)30(2)	R76TW3680(1)30(2)
1,600	650	0.82	24.0	44.0	41.5	37.5	1,200	3,840,000	984	20	6	14.1	17	76TW3820(1)30(2)	R76TW3820(1)30(2)
1,600	650	1	24.0	44.0	41.5	37.5	1,200	3,840,000	1,200	20	5.6	14.4	17	76TW4100(1)30(2)	R76TW4100(1)30(2)
1,600	650	1.2	30.0	45.0	41.5	37.5	1,200	3,840,000	1,440	20	5.3	15.3	16	76TW4120(1)30(2)	R76TW4120(1)30(2)
2,000	700	0.0001	4.0	10.0	18.0	15.0	11,000	44,000,000	1	10	6,366	0.0	65	76UI0100(1)40(2)	R76UI0100(1)40(2)
2,000	700	0.00012	4.0	10.0	18.0	15.0	11,000	44,000,000	1	10	5,305	0.1	65	76UI0120(1)40(2)	R76UI0120(1)40(2)
2,000	700	0.00015	4.0	10.0	18.0	15.0	11,000	44,000,000	2	10	4,244	0.1	65	76UI0150(1)40(2)	R76UI0150(1)40(2)
2,000	700	0.00018	4.0	10.0	18.0	15.0	11,000	44,000,000	2	10	3,537	0.1	65	76UI0180(1)40(2)	R76UI0180(1)40(2)
2,000	700	0.00022	4.0	10.0	18.0	15.0	11,000	44,000,000	2	10	2,894	0.1	65	76UI0220(1)40(2)	R76UI0220(1)40(2)
2,000	700	0.00022	5.0	11.0	18.0	15.0	11,000	44,000,000	2	10	2,894	0.1	60	76UI0220(1)00(2)	R76UI0220(1)00(2)
2,000	700	0.00027	4.0	10.0	18.0	15.0	11,000	44,000,000	3	10	2,358	0.1	65	76UI0270(1)40(2)	R76UI0270(1)40(2)
2,000	700	0.00027	5.0	11.0	18.0	15.0	11,000	44,000,000	3	10	2,358	0.1	60	76UI0270(1)00(2)	R76UI0270(1)00(2)
2,000	700	0.00033	4.0	10.0	18.0	15.0	11,000	44,000,000	4	10	1,929	0.1	65	76UI0330(1)40(2)	R76UI0330(1)40(2)
2,000	700	0.00033	5.0	11.0	18.0	15.0	11,000	44,000,000	4	10	1,929	0.1	60	76UI0330(1)00(2)	R76UI0330(1)00(2)
2,000	700	0.00039	4.0	10.0	18.0	15.0	11,000	44,000,000	4	10	1,632	0.2	65	76UI0390(1)40(2)	R76UI0390(1)40(2)
2,000	700	0.00039	5.0	11.0	18.0	15.0	11,000	44,000,000	4	10	1,632	0.2	60	76UI0390(1)00(2)	R76UI0390(1)00(2)
2,000	700	0.00047	4.0	10.0	18.0	15.0	9,500	38,000,000	4	10	1,355	0.2	65	76UI0470(1)40(2)	R76UI0470(1)40(2)
2,000	700	0.00047	5.0	11.0	18.0	15.0	9,500	38,000,000	4	10	1,355	0.2	60	76UI0470(1)00(2)	R76UI0470(1)00(2)
2,000	700	0.00056	4.0	10.0	18.0	15.0	9,500	38,000,000	5	10	1,137	0.2	65	76UI0560(1)40(2)	R76UI0560(1)40(2)
2,000	700	0.00056	5.0	11.0	18.0	15.0	9,500	38,000,000	5	10	1,137	0.2	60	76UI0560(1)00(2)	R76UI0560(1)00(2)
2,000	700	0.00068	4.0	10.0	18.0	15.0	9,500	38,000,000	6	10	936	0.3	65	76UI0680(1)40(2)	R76UI0680(1)40(2)
2,000	700	0.00068	5.0	11.0	18.0	15.0	9,500	38,000,000	6	10	936	0.3	60	76UI0680(1)00(2)	R76UI0680(1)00(2)
2,000	700	0.00082	4.0	10.0	18.0	15.0	9,500	38,000,000	8	10	776	0.4	65	76UI0820(1)40(2)	R76UI0820(1)40(2)
2,000	700	0.00082	5.0	11.0	18.0	15.0	9,500	38,000,000	8	10	776	0.4	60	76UI0820(1)00(2)	R76UI0820(1)00(2)
2,000	700	0.001	4.0	10.0	18.0	15.0	9,500	38,000,000	10	10	637	0.4	65	76UI1100(1)40(2)	R76UI1100(1)40(2)
2,000	700	0.001	5.0	11.0	18.0	15.0	9,500	38,000,000	10	10	637	0.4	60	76UI1100(1)30(2)	R76UI1100(1)30(2)
2,000	700	0.0012	4.0	10.0	18.0	15.0	9,500	38,000,000	11	10	531	0.5	65	76UI1120(1)40(2)	R76UI1120(1)40(2)
2,000	700	0.0012	5.0	11.0	18.0	15.0	9,500	38,000,000	11	10	531	0.5	60	76UI1120(1)30(2)	R76UI1120(1)30(2)
2,000	700	0.0015	4.0	10.0	18.0	15.0	9,500	38,000,000	14	10	424	0.7	65	76UI1150(1)40(2)	R76UI1150(1)40(2)
2,000	700	0.0015	5.0	11.0	18.0	15.0	9,500	38,000,000	14	10	424	0.7	60	76UI1150(1)30(2)	R76UI1150(1)30(2)
2,000	700	0.0018	4.0	10.0	18.0	15.0	9,500	38,000,000	17	10	354	0.8	65	76UI1180(1)40(2)	R76UI1180(1)40(2)
2,000	700	0.0018	5.0	11.0	18.0	15.0	9,500	38,000,000	17	10	354	0.8	60	76UI1180(1)30(2)	R76UI1180(1)30(2)
2,000	700	0.0022	4.0	10.0	18.0	15.0	9,500	38,000,000	21	10	289	1.0	65	76UI1220(1)40(2)	R76UI1220(1)40(2)
2,000	700	0.0022	5.0	11.0	18.0	15.0	9,500	38,000,000	21	10	289	1.0	60	76UI1220(1)30(2)	R76UI1220(1)30(2)
2,000	700	0.0027	4.0	10.0	18.0	15.0	9,500	38,000,000	26	10	236	1.1	65	76UI1270(1)40(2)	R76UI1270(1)40(2)
2,000	700	0.0027	5.0	11.0	18.0	15.0	9,500	38,000,000	26	10	236	1.2	60	76UI1270(1)30(2)	R76UI1270(1)30(2)
2,000	700	0.0033	5.0	11.0	18.0	15.0	9,500	38,000,000	31	10	193	1.3	60	76UI1330(1)40(2)	R76UI1330(1)40(2)
2,000	700	0.0039	5.0	11.0	18.0	15.0	9,500	38,000,000	37	10	163	1.4	60	76UI1390(1)40(2)	R76UI1390(1)40(2)
2,000	700	0.0047	5.0	11.0	18.0	15.0	9,500	38,000,000	45	10	135	1.6	60	76UI1470(1)40(2)	R76UI1470(1)40(2)
VDC	VAC	Cap Value	T	H	L	Lead Spacing (S)	dV/dt (V/µs)	Max K_0 (V^2/µs)	A_{pk}	Lead Length 2x 4 mm	at 100 kHz	at 100 kHz 85°C	(°C/W)	KEMET Internal Part Number	Customer Part Number
									I_{pkr}	ESL	ESR max	$I_{rms\ max}$ (*)	R_{th}		

(1) Insert lead and packaging code. See Ordering Options Table for available options.
(2) H = 2.5% (only for C ≥ 1,000 pF), J = 5%, K = 10%
(*) I_{rms} value that leads to a ΔT of ≈ 20°C in the hot spot > $T_{HS} = T_{AMB} + \Delta T$ = 85°C + 20°C = 105°C

Table 1 – Ratings & Part Number Reference cont.

VDC	VAC	Cap Value (µF)	Dimensions in mm			Lead Spacing (S)	dV/dt (V/µs)	Max K_0 (V^2/µs)	I_{pkr}	ESL Lead Length 2x 4 mm	ESR max at 100 kHz	$I_{rms\ max}$ (*) at 100 kHz 85°C	Rth	KEMET Internal Part Number	Customer Part Number
			T	H	L				A_{pk}	nH	mΩ	A_{rms}	(°C/W)		
2,000	700	0.0056	6.0	12.0	18.0	15.0	9,500	38,000,000	53	10	114	1.8	56	76UI1560(1)40(2)	R76UI1560(1)40(2)
2,000	700	0.0068	6.0	12.0	18.0	15.0	9,500	38,000,000	65	10	94	2.0	56	76UI1680(1)40(2)	R76UI1680(1)40(2)
2,000	700	0.0082	6.0	12.0	18.0	15.0	9,500	38,000,000	78	10	78	2.1	56	76UI1820(1)40(2)	R76UI1820(1)40(2)
2,000	700	0.01	7.5	13.5	18.0	15.0	9,500	38,000,000	95	10	64	2.5	51	76UI2100(1)40(2)	R76UI2100(1)40(2)
2,000	700	0.01	13.0	12.0	18.0	15.0	9,500	38,000,000	95	10	64	2.6	45	76UI2100(1)70(2)	R76UI2100(1)70(2)
2,000	700	0.012	7.5	13.5	18.0	15.0	9,500	38,000,000	114	10	53.1	2.7	51	76UI2120(1)50(2)	R76UI2120(1)50(2)
2,000	700	0.012	8.5	14.5	18.0	15.0	9,500	38,000,000	114	10	53	2.8	48	76UI2120(1)40(2)	R76UI2120(1)40(2)
2,000	700	0.015	8.5	14.5	18.0	15.0	9,500	38,000,000	143	10	42	3.1	48	76UI2150(1)40(2)	R76UI2150(1)40(2)
2,000	700	0.018	10.0	16.0	18.0	15.0	9,500	38,000,000	171	10	35.4	3.6	44	76UI2180(1)50(2)	R76UI2180(1)50(2)
2,000	700	0.022	10.0	16.0	18.0	15.0	9,500	38,000,000	209	10	28.9	4.0	44	76UI2220(1)50(2)	R76UI2220(1)50(2)
2,000	700	0.027	11.0	19.0	18.0	15.0	9,500	38,000,000	257	10	23.6	4.6	40	76UI2270(1)50(2)	R76UI2270(1)50(2)
2,000	700	0.001	6.0	15.0	26.5	22.5	4,500	18,000,000	5	16	637	0.4	43	76UN1100(1)00(2)	R76UN1100(1)00(2)
2,000	700	0.0012	6.0	15.0	26.5	22.5	4,500	18,000,000	5	16	531	0.5	43	76UN1120(1)00(2)	R76UN1120(1)00(2)
2,000	700	0.0015	6.0	15.0	26.5	22.5	4,500	18,000,000	7	16	424	0.7	43	76UN1150(1)00(2)	R76UN1150(1)00(2)
2,000	700	0.0018	6.0	15.0	26.5	22.5	4,500	18,000,000	8	16	354	0.8	43	76UN1180(1)00(2)	R76UN1180(1)00(2)
2,000	700	0.0022	6.0	15.0	26.5	22.5	4,500	18,000,000	10	16	289	1.0	43	76UN1220(1)00(2)	R76UN1220(1)00(2)
2,000	700	0.0027	6.0	15.0	26.5	22.5	4,500	18,000,000	12	16	236	1.2	43	76UN1270(1)00(2)	R76UN1270(1)00(2)
2,000	700	0.0033	6.0	15.0	26.5	22.5	4,500	18,000,000	15	16	193	1.5	43	76UN1330(1)00(2)	R76UN1330(1)00(2)
2,000	700	0.0039	6.0	15.0	26.5	22.5	4,500	18,000,000	18	16	163	1.7	43	76UN1390(1)00(2)	R76UN1390(1)00(2)
2,000	700	0.0047	6.0	15.0	26.5	22.5	4,500	18,000,000	21	16	135	1.8	43	76UN1470(1)00(2)	R76UN1470(1)00(2)
2,000	700	0.0056	6.0	15.0	26.5	22.5	4,500	18,000,000	25	16	114	2.0	43	76UN1560(1)00(2)	R76UN1560(1)00(2)
2,000	700	0.0068	6.0	15.0	26.5	22.5	4,500	18,000,000	31	16	94	2.2	43	76UN1680(1)00(2)	R76UN1680(1)00(2)
2,000	700	0.0082	6.0	15.0	26.5	22.5	4,500	18,000,000	37	16	78	2.4	43	76UN1820(1)30(2)	R76UN1820(1)30(2)
2,000	700	0.01	6.0	15.0	26.5	22.5	4,500	18,000,000	45	16	64	2.7	43	76UN2100(1)30(2)	R76UN2100(1)30(2)
2,000	700	0.012	6.0	15.0	26.5	22.5	4,500	18,000,000	54	16	53	2.9	43	76UN2120(1)30(2)	R76UN2120(1)30(2)
2,000	700	0.015	6.0	15.0	26.5	22.5	4,500	18,000,000	68	16	42	3.3	43	76UN2150(1)40(2)	R76UN2150(1)40(2)
2,000	700	0.018	6.0	15.0	26.5	22.5	4,500	18,000,000	81	16	35	3.6	43	76UN2180(1)40(2)	R76UN2180(1)40(2)
2,000	700	0.022	7.0	16.0	26.5	22.5	4,500	18,000,000	99	16	29	4.1	41	76UN2220(1)40(2)	R76UN2220(1)40(2)
2,000	700	0.027	7.0	16.0	26.5	22.5	4,500	18,000,000	122	16	24	4.5	41	76UN2270(1)40(2)	R76UN2270(1)40(2)
2,000	700	0.033	8.5	17.0	26.5	22.5	4,500	18,000,000	149	16	19	5.2	38	76UN2330(1)40(2)	R76UN2330(1)40(2)
2,000	700	0.039	8.5	17.0	26.5	22.5	4,500	18,000,000	176	16	16.3	5.6	38	76UN2390(1)50(2)	R76UN2390(1)50(2)
2,000	700	0.039	10.0	18.5	26.5	22.5	4,500	18,000,000	176	16	16	5.9	36	76UN2390(1)40(2)	R76UN2390(1)40(2)
2,000	700	0.047	10.0	18.5	26.5	22.5	4,500	18,000,000	212	16	14	6.4	36	76UN2470(1)40(2)	R76UN2470(1)40(2)
2,000	700	0.056	11.0	20.0	26.5	22.5	4,500	18,000,000	252	16	20	5.4	34	76UN2560(1)40(2)	R76UN2560(1)40(2)
2,000	700	0.068	11.0	20.0	26.5	22.5	4,500	18,000,000	306	16	16.4	6.0	34	76UN2680(1)50(2)	R76UN2680(1)50(2)
2,000	700	0.082	13.0	22.0	26.5	22.5	4,500	18,000,000	369	16	13.6	6.8	31	76UN2820(1)50(2)	R76UN2820(1)50(2)
2,000	700	0.1	14.5	29.5	26.5	22.5	4,500	18,000,000	450	16	11.1	8.1	27	76UN3100(1)50(2)	R76UN3100(1)50(2)
2,000	700	0.022	9.0	17.0	32.0	27.5	2,500	10,000,000	55	18	36	4.0	35	76UR2220(1)30(2)	R76UR2220(1)30(2)
2,000	700	0.027	9.0	17.0	32.0	27.5	2,500	10,000,000	68	18	29	4.4	35	76UR2270(1)30(2)	R76UR2270(1)30(2)
2,000	700	0.033	9.0	17.0	32.0	27.5	2,500	10,000,000	83	18	24	4.9	35	76UR2330(1)30(2)	R76UR2330(1)30(2)
2,000	700	0.039	11.0	20.0	32.0	27.5	2,500	10,000,000	98	18	20	5.6	31	76UR2390(1)20(2)	R76UR2390(1)20(2)
2,000	700	0.047	11.0	20.0	32.0	27.5	2,500	10,000,000	118	18	17	6.1	31	76UR2470(1)30(2)	R76UR2470(1)30(2)
2,000	700	0.047	24.0	15.0	32.0	27.5	2,500	10,000,000	118	18	17	6.6	27	76UR2470(1)L0(2)	R76UR2470(1)L0(2)
2,000	700	0.056	13.0	22.0	32.0	27.5	2,500	10,000,000	140	18	20	5.9	29	76UR2560(1)30(2)	R76UR2560(1)30(2)
2,000	700	0.056	24.0	15.0	32.0	27.5	2,500	10,000,000	140	18	20	6.1	27	76UR2560(1)L0(2)	R76UR2560(1)L0(2)
2,000	700	0.068	13.0	22.0	32.0	27.5	2,500	10,000,000	170	18	16	6.5	29	76UR2680(1)30(2)	R76UR2680(1)30(2)
2,000	700	0.068	24.0	15.0	32.0	27.5	2,500	10,000,000	170	18	16	6.7	27	76UR2680(1)L0(2)	R76UR2680(1)L0(2)
2,000	700	0.082	13.0	25.0	32.0	27.5	2,500	10,000,000	205	18	14	7.3	28	76UR2820(1)40(2)	R76UR2820(1)40(2)
VDC	VAC	Cap Value	T	H	L	Lead Spacing (S)	dV/dt (V/µs)	Max K_0 (V^2/µs)	A_{pk} / I_{pkr}	Lead Length 2x 4 mm / ESL	at 100 kHz / ESR max	at 100 kHz 85°C / $I_{rms\ max}$ (*)	(°C/W) / R_{th}	KEMET Internal Part Number	Customer Part Number

(1) Insert lead and packaging code. See Ordering Options Table for available options.
(2) H = 2.5% (only for C ≥ 1,000 pF), J = 5%, K = 10%
(*) I_{rms} value that leads to a ΔT of ≈ 20°C in the hot spot > $T_{HS} = T_{AMB} + \Delta T$ = 85°C + 20°C = 105°C

Table 1 – Ratings & Part Number Reference cont.

VDC	VAC	Cap Value (µF)	Dimensions in mm			Lead Spacing (S)	dV/dt (V/µs)	Max K_0 (V^2/µs)	I_{pkr}	ESL	ESR max	$I_{rms\ max}$ (*)	Rth	KEMET Internal Part Number	Customer Part Number
										Lead Length 2x 4 mm	at 100 kHz	at 100 kHz 85°C			
			T	H	L				A_{pk}	nH	mΩ	A_{rms}	(°C/W)		
2,000	700	0.082	24.0	15.0	32.0	27.5	2,500	10,000,000	205	18	14	7.4	27	76UR2820(1)L0(2)	R76UR2820(1)L0(2)
2,000	700	0.1	14.0	28.0	32.0	27.5	2,500	10,000,000	250	18	11	8.3	26	76UR3100(1)30(2)	R76UR3100(1)30(2)
2,000	700	0.12	18.0	33.0	32.0	27.5	2,500	10,000,000	300	18	20	6.6	23	76UR3120(1)30(2)	R76UR3120(1)30(2)
2,000	700	0.15	18.0	33.0	32.0	27.5	2,500	10,000,000	375	18	16	7.4	23	76UR3150(1)30(2)	R76UR3150(1)30(2)
2,000	700	0.18	22.0	37.0	32.0	27.5	2,500	10,000,000	450	18	13	8.5	21	76UR3180(1)30(2)	R76UR3180(1)30(2)
2,000	700	0.22	22.0	37.0	32.0	27.5	2,500	10,000,000	550	18	11	9.4	21	76UR3220(1)30(2)	R76UR3220(1)30(2)
2,000	700	0.033	11.0	22.0	41.5	37.5	1,500	6,000,000	50	20	24	5.5	27	76UW2330(1)30(2)	R76UW2330(1)30(2)
2,000	700	0.039	11.0	22.0	41.5	37.5	1,500	6,000,000	59	20	20	6.0	27	76UW2390(1)30(2)	R76UW2390(1)30(2)
2,000	700	0.047	11.0	22.0	41.5	37.5	1,500	6,000,000	71	20	17	6.6	27	76UW2470(1)30(2)	R76UW2470(1)30(2)
2,000	700	0.056	11.0	22.0	41.5	37.5	1,500	6,000,000	84	20	20	6.1	27	76UW2560(1)30(2)	R76UW2560(1)30(2)
2,000	700	0.068	11.0	22.0	41.5	37.5	1,500	6,000,000	102	20	16	6.7	27	76UW2680(1)30(2)	R76UW2680(1)30(2)
2,000	700	0.082	11.0	22.0	41.5	37.5	1,500	6,000,000	123	20	14	7.4	27	76UW2820(1)30(2)	R76UW2820(1)30(2)
2,000	700	0.082	24.0	15.0	41.5	37.5	1,500	6,000,000	123	20	14	7.8	24	76UW2820(1)L0(2)	R76UW2820(1)L0(2)
2,000	700	0.1	13.0	24.0	41.5	37.5	1,500	6,000,000	150	20	11	8.4	25	76UW3100(1)30(2)	R76UW3100(1)30(2)
2,000	700	0.1	24.0	15.0	41.5	37.5	1,500	6,000,000	150	20	11	8.6	24	76UW3100(1)L0(2)	R76UW3100(1)L0(2)
2,000	700	0.12	13.0	24.0	41.5	37.5	1,500	6,000,000	180	20	20	6.3	25	76UW3120(1)30(2)	R76UW3120(1)30(2)
2,000	700	0.12	24.0	15.0	41.5	37.5	1,500	6,000,000	180	20	20	6.4	24	76UW3120(1)L0(2)	R76UW3120(1)L0(2)
2,000	700	0.15	16.0	28.5	41.5	37.5	1,500	6,000,000	225	20	16	7.5	23	76UW3150(1)30(2)	R76UW3150(1)30(2)
2,000	700	0.15	24.0	19.0	41.5	37.5	1,500	6,000,000	225	20	16	7.4	23	76UW3150(1)L0(2)	R76UW3150(1)L0(2)
2,000	700	0.18	16.0	28.5	41.5	37.5	1,500	6,000,000	270	20	13	8.2	23	76UW3180(1)30(2)	R76UW3180(1)30(2)
2,000	700	0.18	24.0	19.0	41.5	37.5	1,500	6,000,000	270	20	13	8.1	23	76UW3180(1)L0(2)	R76UW3180(1)L0(2)
2,000	700	0.22	19.0	32.0	41.5	37.5	1,500	6,000,000	330	20	11	9.4	21	76UW3220(1)30(2)	R76UW3220(1)30(2)
2,000	700	0.27	20.0	40.0	41.5	37.5	1,500	6,000,000	405	20	9	11.0	19	76UW3270(1)30(2)	R76UW3270(1)30(2)
2,000	700	0.33	20.0	40.0	41.5	37.5	1,500	6,000,000	495	20	7	12.1	19	76UW3330(1)30(2)	R76UW3330(1)30(2)
2,000	700	0.39	24.0	44.0	41.5	37.5	1,500	6,000,000	585	20	8	11.9	17	76UW3390(1)30(2)	R76UW3390(1)30(2)
2,000	700	0.47	24.0	44.0	41.5	37.5	1,500	6,000,000	705	20	7	13.1	17	76UW3470(1)30(2)	R76UW3470(1)30(2)
2,000	700	0.56	30.0	45.0	41.5	37.5	1,500	6,000,000	840	20	6	14.8	16	76UW3560(1)30(2)	R76UW3560(1)30(2)
VDC	VAC	Cap Value	T	H	L	Lead Spacing (S)	dV/dt (V/µs)	Max K_0 (V^2/µs)	A_{pk}	Lead Length 2x 4 mm	at 100 kHz	at 100 kHz 85°C	(°C/W)	KEMET Internal Part Number	Customer Part Number
									I_{pkr}	ESL	ESR max	$I_{rms\ max}$ (*)	R_{th}		

(1) Insert lead and packaging code. See Ordering Options Table for available options.
(2) H = 2.5% (only for C ≥ 1,000 pF), J = 5%, K = 10%
(*) I_{rms} value that leads to a ΔT of ≈ 20°C in the hot spot > $T_{HS} = T_{AMB} + \Delta T$ = 85°C + 20°C = 105°C

Soldering Process

The implementation of the RoHS directive has resulted in the selection of SnAgCu (SAC) alloys or SnCu alloys as primary solder. This has increased the liquidus temperature from that of 183°C for SnPb eutectic alloy to 217 – 221°C for the new alloys. As a result, the heat stress to the components, even in wave soldering, has increased considerably due to higher pre-heat and wave temperatures. Polypropylene capacitors are especially sensitive to heat (the melting point of polypropylene is 160 – 170°C). Wave soldering can be destructive, especially for mechanically small polypropylene capacitors (with lead spacing of 5 mm to 15 mm), and great care has to be taken during soldering. The recommended solder profiles from KEMET should be used. Please consult KEMET with any questions. In general, the wave soldering curve from IEC Publication 61760–1 Edition 2 serves as a solid guideline for successful soldering. Please see Figure 1.

Reflow soldering is not recommended for through-hole film capacitors. Exposing capacitors to a soldering profile in excess of the above recommended limits may result in degradation or permanent damage to the capacitors.

Do not place the polypropylene capacitor through an adhesive curing oven to cure resin for surface mount components. Insert through-hole parts after the curing of surface mount parts. Consult KEMET to discuss the actual temperature profile in the oven, if through-hole components must pass through the adhesive curing process. A maximum two soldering cycles is recommended. Please allow time for the capacitor surface temperature to return to a normal temperature before the second soldering cycle.

Manual Soldering Recommendations

Following is the recommendation for manual soldering with a soldering iron.

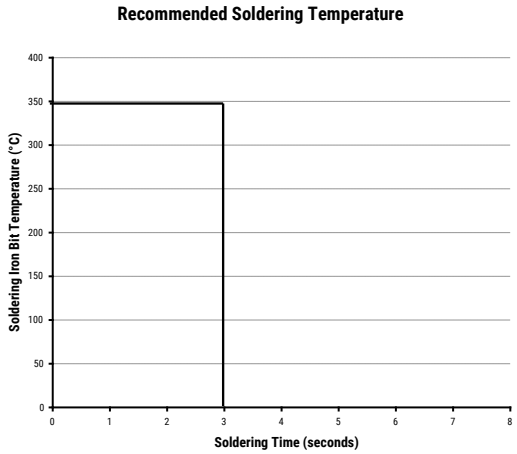

The soldering iron tip temperature should be set at 350°C (+10°C maximum) with the soldering duration not to exceed more than 3 seconds.

Wave Soldering Recommendations

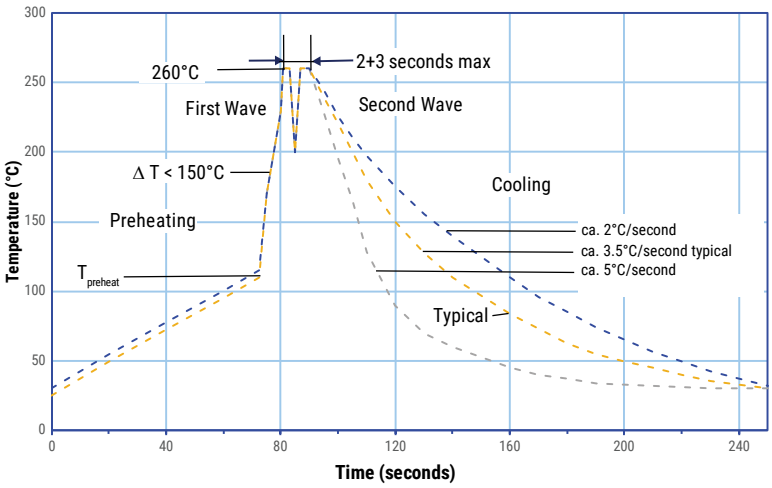

Soldering Process cont.

Wave Soldering Recommendations cont.

1. The table indicates the maximum set-up temperature of the soldering process

Figure 1

Film Material	Maximum Preheat Temperature		Maximum Peak Soldering Temperature	
	Capacitor Pitch ≤ 15 mm	Capacitor Pitch > 15 mm	Capacitor Pitch ≤ 15 mm	Capacitor Pitch > 15 mm
Double Metallized Polystyrene and Single Metallized Polypropylene	110°C	130°C	260°C	270°C

2. The maximum temperature measured on the capacitor body:
   Set the temperature so that the maximum temperature is below the limit:

Film Material	Maximum Temperature Measured on the Capacitor Body
Double Metallized Polystyrene and Single Metallized Polypropylene	120°C (for series R76)

Duration: < 60 seconds

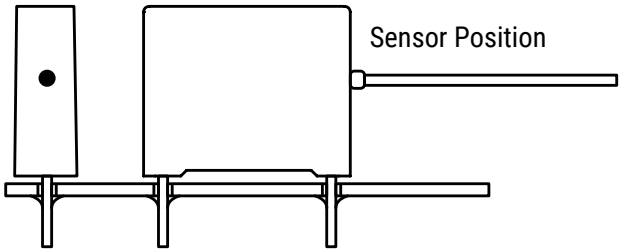

Selective Soldering Recommendations

Selective dip soldering is a variation of reflow soldering. In this method, the printed circuit board with through-hole components to be soldered is preheated and transported over the solder bath as in normal flow soldering without touching the solder. When the board is over the bath, it is stopped and pre-designed solder pots are lifted from the bath with molten solder only at the places of the selected components, and pressed against the lower surface of the board to solder the components.

The temperature profile for selective soldering is similar to the double wave flow soldering outlined in this document, **however, instead of two baths, there is only one bath with a time from 3 to 10 seconds.** In selective soldering, the risk of overheating is greater than in double wave flow soldering, and great care must be taken so that the parts are not overheated.

Construction

1 Section

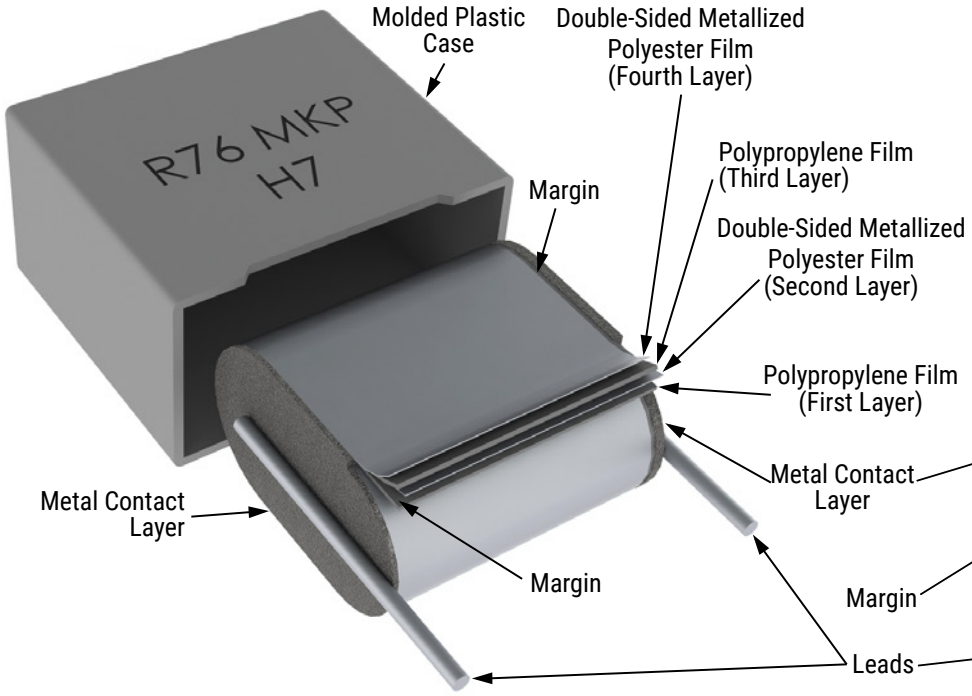

Detailed Cross Section

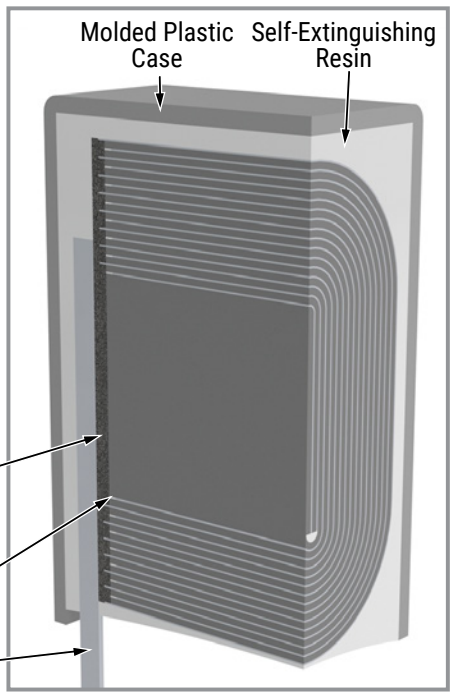

Winding Schemes

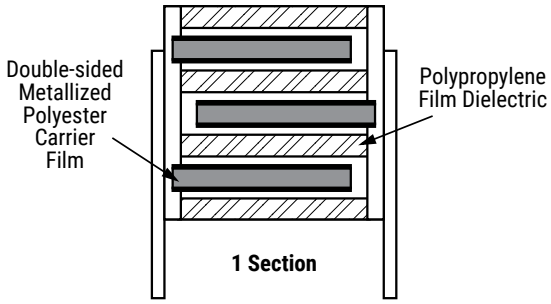

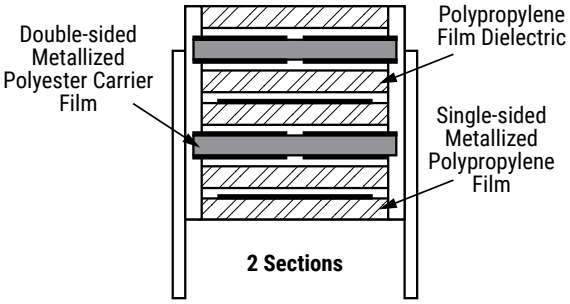

Low Profile Version

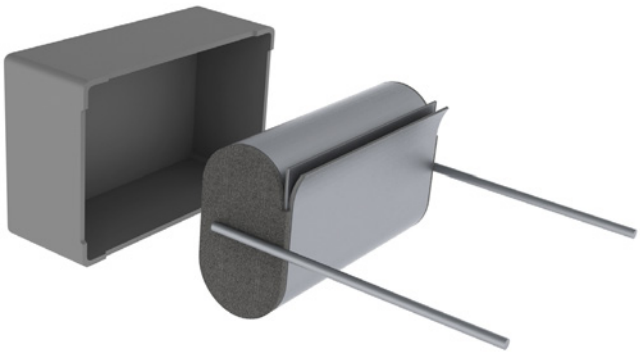

Marking

Pitch – 7.5, 10, 15, & 22.5

Marking Variants*

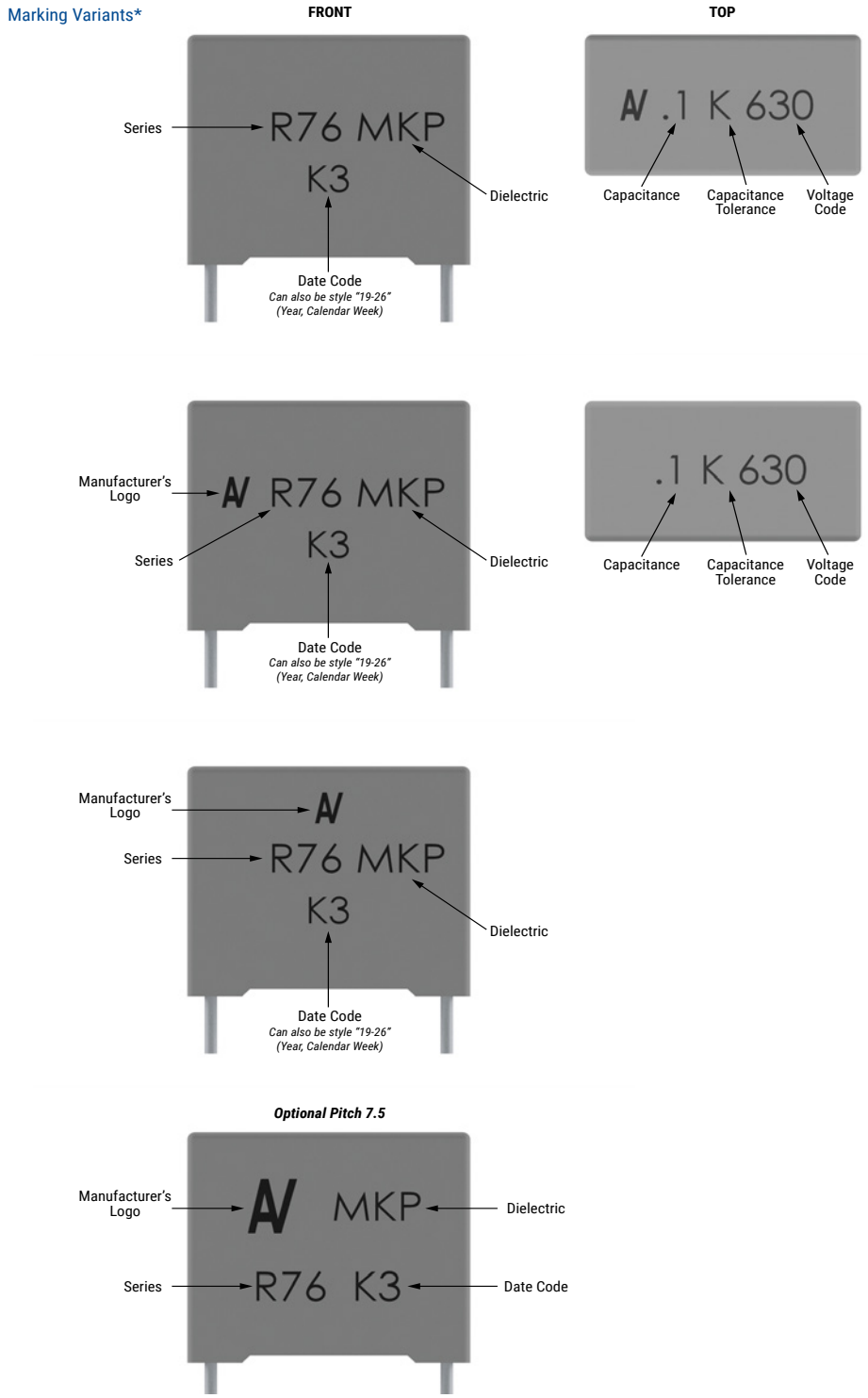

**Differences are caused by technology (clichee, laser, or ink) and technic (production line)*

Slight change in the layout can be possible but this does not affect the content of the information of the current marking.
This change will be achieved without impact to product form, fit or function, as the products are equivalent with respect to physical, mechanical, quality and reliability characteristics.

Marking cont.

Pitch – 7.5, 10, 15, 22.5, 27.5, & 37.5

Marking Variants*

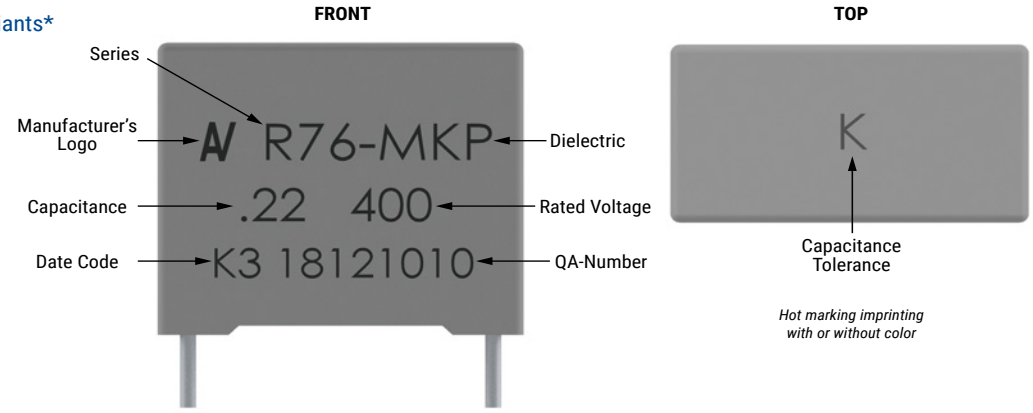

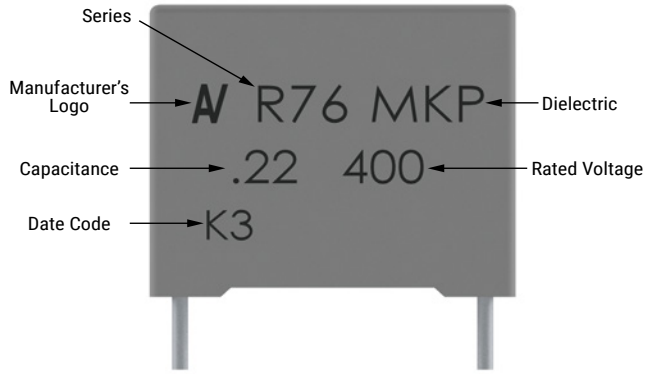

Pitch – 22.5, 27.5, & 37.5

Marking Variants*

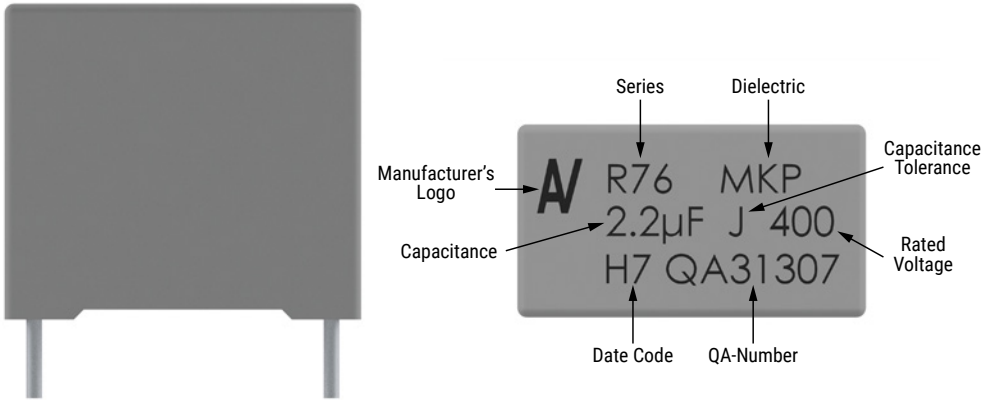

** Differences are caused by technology (clichee, laser, or ink) and technic (production line)*

Slight change in the layout can be possible but this does not affect the content of the information of the current marking.
This change will be achieved without impact to product form, fit or function, as the products are equivalent with respect to physical, mechanical, quality and reliability characteristics.

Marking cont.

Manufacturing Date Code (IEC–60062)			
Year	**Code**	**Month**	**Code**
2020	M	January	1
2021	N	February	2
2022	P	March	3
2023	R	April	4
2024	S	May	5
2025	T	June	6
2026	U	July	7
2027	V	August	8
2028	W	September	9
2029	X	October	O
2030	A	November	N
2031	B	December	D
2032	C		
2033	D		
2034	E		
2035	F		
2036	H		
2037	J		
2038	K		
2039	L		
2040	M		

Packaging Quantities

Lead Spacing	Thickness (mm)	Height (mm)	Length (mm)	Bulk Short Leads	Bulk Long Leads		Standard Reel ø 355 mm	Large Reel ø 500 mm	Ammo Taped
	Lead and Packaging Code			JA - JB JE - JH - SE	Z3[1] - JM[2]	40 - 50	GY - CK[1]	CK	DQ
7.5	3.0	8.0	10.0	1,500	1,750	-	2,100	-	2,800
	4.0	9.0	10.0	2,000	1,500	-	1,500	-	2,100
	5.0	10.5	10.0	1,500	1,000	-	1,200	-	1,600
	6.0	12.0	10.5	1,000	800	-	1,000	-	1,350
10	4.0	9.0	13.0	2,000	2,200	1,800	750	1,500	1,000
	5.0	11.0	13.0	1,300	2,000	1,500	600	1,250	800
	6.0	12.0	13.0	1,000	1,800	1,200	500	1,000	680
15	4.0	10.0	18.0	2,500	1,500	1,500	750	1,500	1,000
	5.0	11.0	18.0	2,000	1,250	1,000	600	1,250	800
	6.0	12.0	18.0	1,750	1,000	900	500	1,000	680
	7.5	13.5	18.0	1,000	800	700	350	800	500
	8.5	14.5	18.0	1,000	650	500	300	700	440
	9.0	12.5	18.0	1,000	700	520	270	650	410
	10.0	16.0	18.0	750	550	500	270	600	380
	11.0	19.0	18.0	450	400	350	270	500	340
	13.0	12.0	18.0	750	520	490	200	480	280
22.5	6.0	15.0	26.5	805	450	500	300	700	464
	7.0	16.0	26.5	700	450	500	250	550	380
	8.5	17.0	26.5	468	350	300	250	450	280
	10.0	18.5	26.5	396	350	300	160	350	235
	11.0	20.0	26.5	360	200	250	160	350	217
	13.0	22.0	26.5	300	150	200	130	300	-
	14.5	29.5	26.5	264	120	120	-	-	-
27.5	9.0	17.0	32.0	816	-	408	230	450	-
	11.0	20.0	32.0	560	-	336	190	350	-
	13.0	12.0	32.0	672	-	288	-	-	-
	13.0	22.0	32.0	480	-	288	150	300	-
	13.0	25.0	32.0	480	-	288	-	-	-
	14.0	28.0	32.0	352	-	176	-	-	-
	16.0	30.0	32.0	288	-	144	-	-	-
	18.0	33.0	32.0	256	-	128	-	-	-
	22.0	37.0	32.0	168	-	112	-	-	-
	24.0	15.0	32.0	336	-	144	-	-	-
37.5	11.0	22.0	41.5	420	-	252	-	-	-
	13.0	24.0	41.5	360	-	216	-	-	-
	16.0	28.5	41.5	216	-	108	-	-	-
	19.0	32.0	41.5	192	-	96	-	-	-
	20.0	40.0	41.5	126	-	84	-	-	-
	24.0	15.0	41.5	252	-	108	-	-	-
	24.0	19.0	41.5	216	-	108	-	-	-
	24.0	44.0	41.5	108	-	72	-	-	-
	30.0	45.0	41.5	90	-	60	-	-	-

1 Only for 7.5 mm lead spacing.
2 Only for > 7.5 mm lead spacing.

Lead Taping & Packaging (IEC 60286–2)

Figure 1 — Lead Spacing 7.5 mm

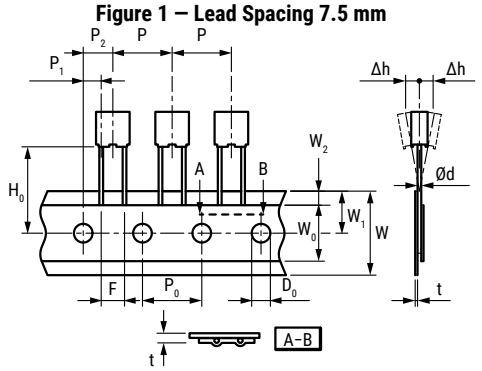

Lead Spacing 10 & 15 mm

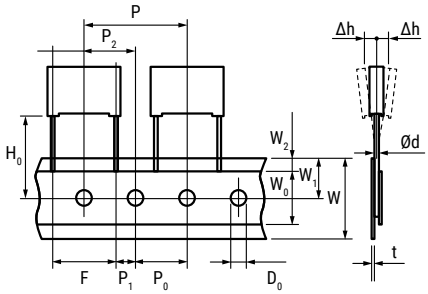

Lead Spacing 22.5 & 27.5 mm

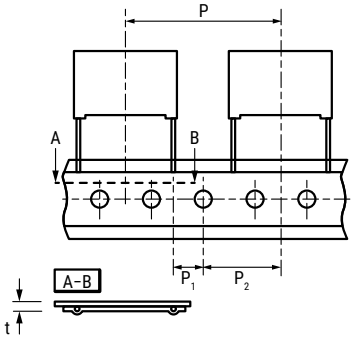

Taping Specification

Description	Symbol	Dimensions (mm)					
		Lead Spacing					Tolerance
		7.5	10.0	15.0	22.5	27.5	
Lead wire diameter	d	0.5 – 0.6	0.6	0.6 – 0.8	0.8	0.8	±0.05
Taping lead space	P	12.7	25.4	25.4	38.1	38.1	±1
Feed hole lead space *	P_0	12.7	12.7	12.7	12.7	12.7	±0.2 **
Centering of the lead wire	P_1	2.6	7.7	5.2	7.8	5.3	±0.7
Centering of the body	P_2	6.35	12.7	12.7	19.05	19.05	±1.3
Lead spacing ***	F	7.5	10.0	15.0	22.5	27.5	+0.6/−0.1
Component alignment	Δh	0	0	0	0	0	±2
Component deviation	Δp	0	0	0	0	0	±1
Height of component from tape center	H_0****	18.5	18.5	18.5	18.5	18.5	±0.5
Carrier tape width	W	18	18	18	18	18	+1/−0.5
Hold down tape width	W_0	6	9	10	10	10	Minimum
Hole position	W_1	9	9	9	9	9	±0.5
Hold down tape position	W_2	3	3	3	3	3	Maximum
Feed hole diameter	D_0	4	4	4	4	4	±0.2
Total Tape thickness	t	0.7	0.7	0.7	0.7	0.7	±0.2

** Available also 15 mm.*
*** Maximum 1 mm on 20 lead spacing.*
**** 15 mm and 10 mm taped to 7.5 mm (crimped leads) available upon request.*
***** H_0 = 16.5 mm is available upon request.*

Lead Taping & Packaging (IEC 60286–2) cont.

Ammo Specifications

Dimensions (mm)		
H	W	T
360	340	59

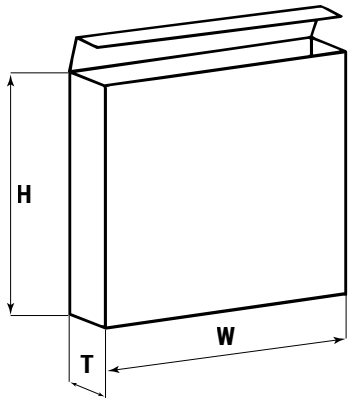

Reel Specifications

Dimensions (mm)		
D	H	W
355 500	30 25	55 Maximum

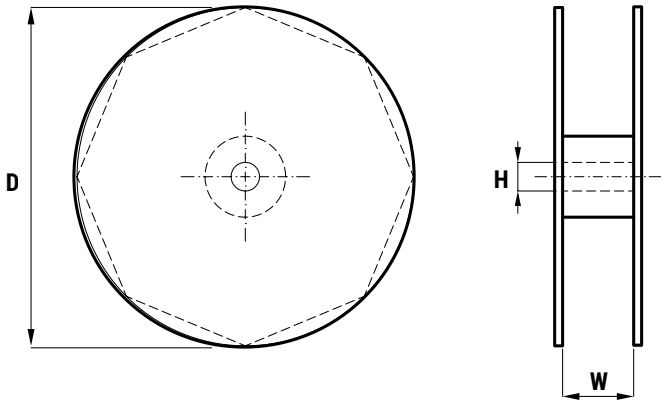

KEMET Electronics Corporation Sales Offices

For a complete list of our global sales offices, please visit www.kemet.com/sales.

Disclaimer

YAGEO Corporation and its affiliates do not recommend the use of commercial or automotive grade products for high reliability applications or manned space flight.

All product specifications, statements, information and data (collectively, the "Information") in this datasheet are subject to change. The customer is responsible for checking and verifying the extent to which the Information contained in this publication is applicable to an order at the time the order is placed. All Information given herein is believed to be accurate and reliable, but it is presented without guarantee, warranty, or responsibility of any kind, expressed or implied.

Statements of suitability for certain applications are based on KEMET Electronics Corporation's ("KEMET") knowledge of typical operating conditions for such applications, but are not intended to constitute – and KEMET specifically disclaims – any warranty concerning suitability for a specific customer application or use. The Information is intended for use only by customers who have the requisite experience and capability to determine the correct products for their application. Any technical advice inferred from this Information or otherwise provided by KEMET with reference to the use of KEMET's products is given gratis, and KEMET assumes no obligation or liability for the advice given or results obtained.

Although KEMET designs and manufactures its products to the most stringent quality and safety standards, given the current state of the art, isolated component failures may still occur. Accordingly, customer applications which require a high degree of reliability or safety should employ suitable designs or other safeguards (such as installation of protective circuitry or redundancies) in order to ensure that the failure of an electrical component does not result in a risk of personal injury or property damage.

Although all product–related warnings, cautions and notes must be observed, the customer should not assume that all safety measures are indicated or that other measures may not be required.

Additional information about production site flexibility can be found <here>

KEMET is a registered trademark of KEMET Electronics Corporation.