Tous droits strictement reserves. Reproduction ou communication a des tiers interdite sous quelque forme que ce soit sans autorisation ecrite du propietaire. Propriete de c FCI. Droits de reproduction FCI.

All rights strictly reserved. Reproduction or issue to third parties in any form whatever is not permitted without written authority from the proprietor. Property of FCI. Copyright FCI.

PRODUCT NUMBER
SEE TABLE

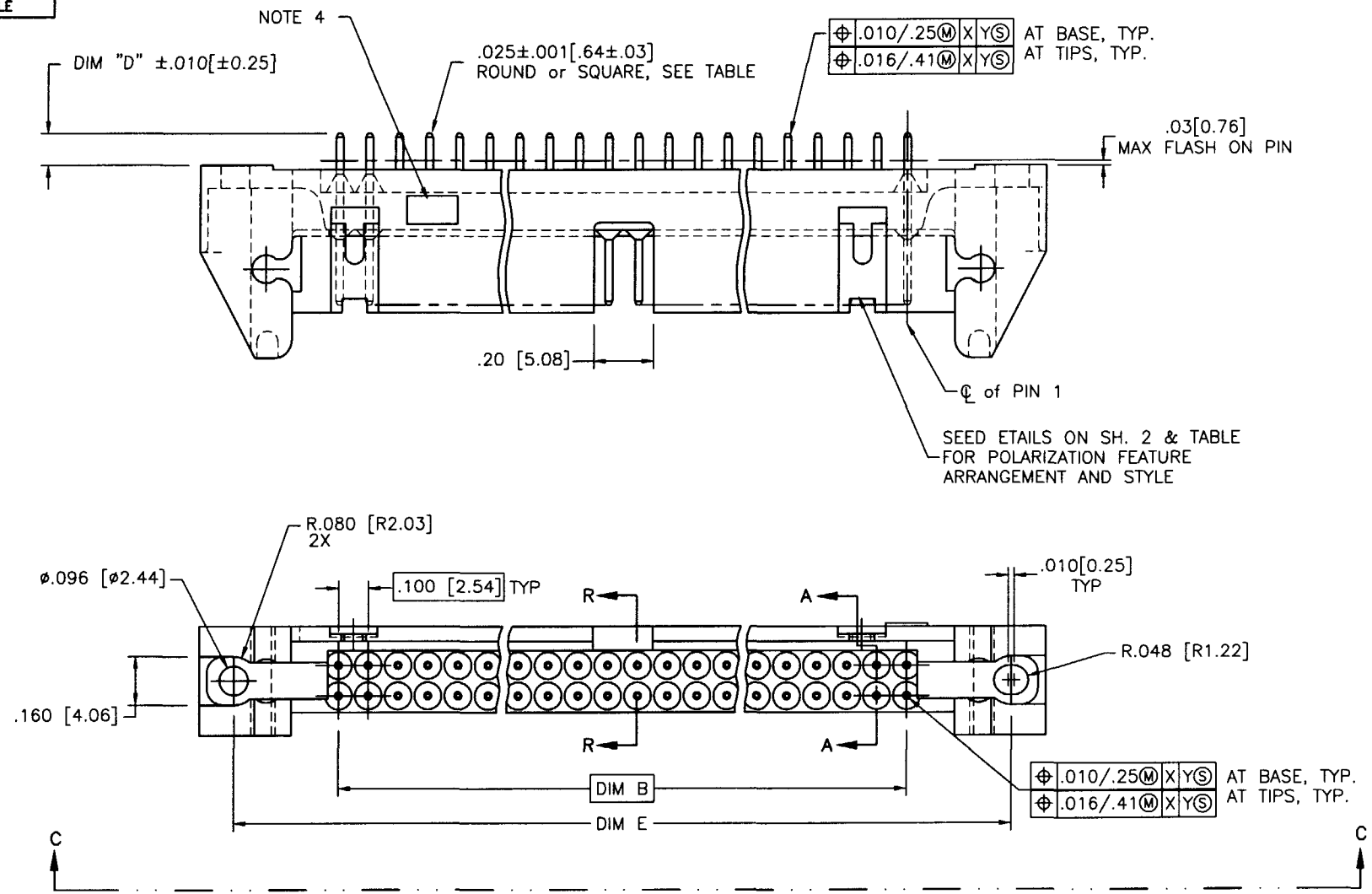

mat'l. code 16-508-036, 16-508-002, 16-508-131				tolerances unless otherwise specified			CUSTOMER COPY	Electronics FCI www.fciconnect.com
ltr	ecn no	dr	date		.XX ±.01/.3		projection	title QUICKIE HDR, STRAIGHT 3 WALL LATCH & EJECT
F	V90880	EPK	4/6/99	linear	.XXX ±.005/0.13			
G	V90995	EPK	4/29/99		.XXXX ±.0020/0.051			
H	V91075	EPK	5/6/99	angles	0° ±2°			
J	V00871	EPK	4/11/00	dr	J. SHREINER	1/15/90	INCH/MM	product family QKE. HDR. — code 213
K	V01240	MDF	5/11/00	engr	M. SMYK	11/15/90		size A — dwg no 66207 — sheet 1 of 8
				chr	M. SMYK	11/15/90	scale 2:1	
				appd	M. SMYK	11/15/90		

sheet index	revision	K	K	K	K	K	K	K	K
	sheet	1	2	3	4	5	6	7	8

cage code 22526

ACAD

PRODUCT NUMBER
SEE TABLE

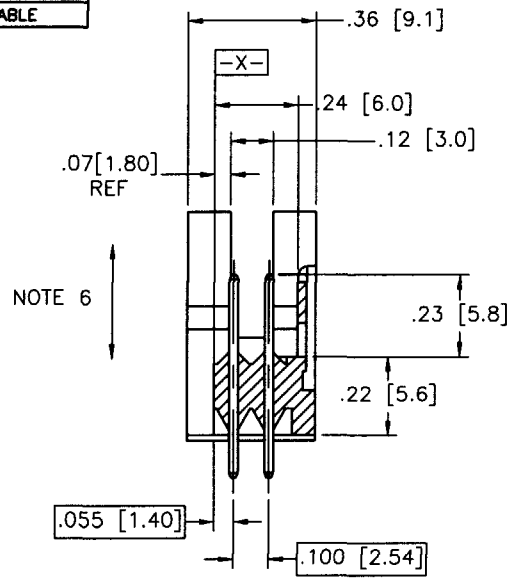

SECTION A–A
ROTATED 90° CW

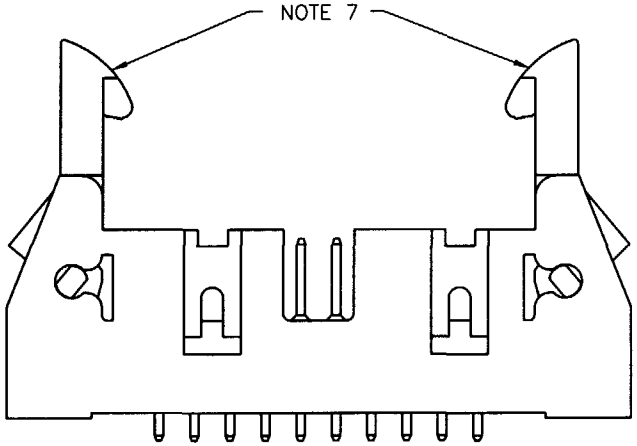

HEADER WITH LATCHES

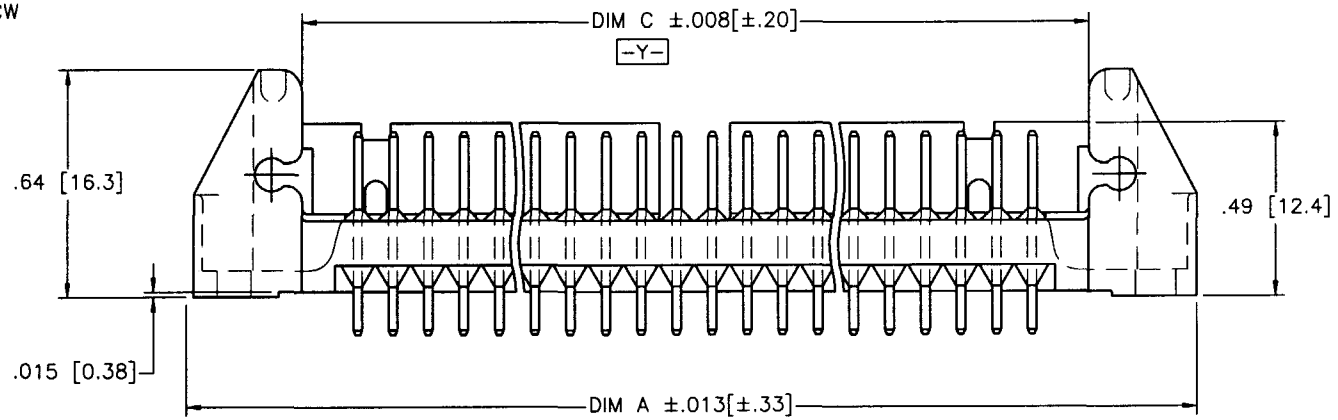

VIEW C–C

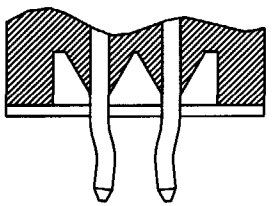

SECTION R–R

mat'l. code				tolerances unless otherwise specified			CUSTOMER COPY	FCI Electronics www.fciconnect.com
ltr	ecn no	dr	date	linear	.XX ±.01/.3			
K					.XXX ±.005/0.13		projection	title: QUICKIE HDR, STRAIGHT 3 WALL LATCH & EJECT
					.XXXX ±.0020/0.051			
				angles	0° ±2°			
				dr	J. SHREINER	1/15/90	INCH/MM	product family: QKE. HDR. / code: 213
				engr	M. SMYK	1/15/90		size: A / dwg no: 66207 / sheet: 2 of
				chr	M. SMYK	1/15/90	scale 2:1	
				appd	M. SMYK	1/15/90		
sheet index	revision sheet							cage code 22526

Tous droits strictement reserves. Reproduction ou communication a des tiers interdite sous quelque forme que ce soit sans autorisation ecrite du proprietaire. Propriete de c FCI. Droits de reproduction FCI.

All rights strictly reserved. Reproduction or issue to third parties in any form whatever is not permitted without written authority from the proprietor. Property of FCI. Copyright FCI.

ACAD

Tous droits strictement reserves. Reproduction ou communication a des tiers interdite sous quelque forme que ce soit sans autorisation ecrite du proprietaire. Propriete de c FCI. Droits de reproduction FCI.

All rights strictly reserved. Reproduction or issue to third parties in any form whatever is not permitted without written authority from the proprietor. Property of FCI. Copyright FCI.

PRODUCT NUMBER
SEE TABLE

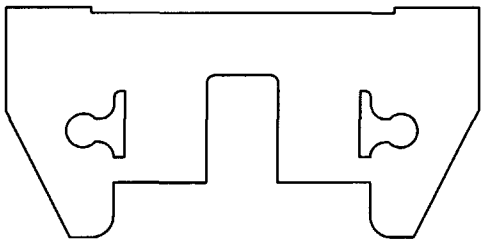

2X5
STYLE A

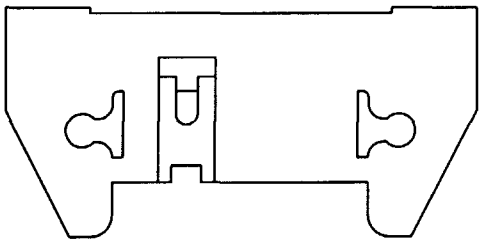

2X5
STYLE B

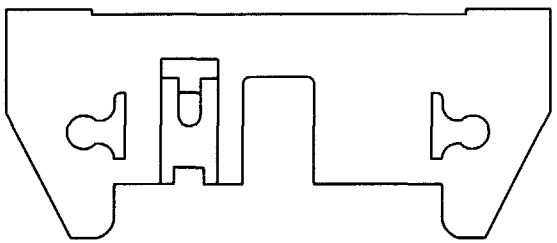

2X7
STYLE C

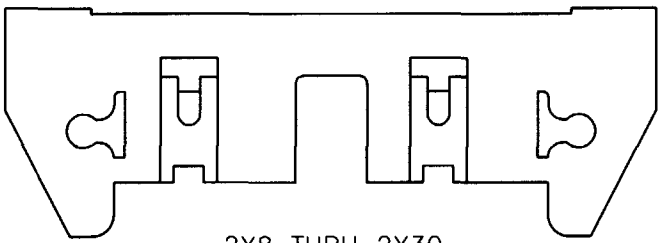

2X8 THRU 2X30
2X10 SHOWN
STYLE D

NOTES:

1. MOLDING MATERIAL: GLASS FILLED POLYESTER FLAME RETARDENT PER UL- 94V-0. COLOR: BLUE
2. PIN MATERIAL: PHOS BRONZE
3. 1° MAX DRAFT PERMISSIBLE ON ALL SURFACES UNLESS OTHERWISE SPECIFIED.
4. LOGO LOCATED APPROX. AS SHOWN.
5. RECOMMENDED MOUNTING SCREW: #2-56 FILLISTER HD. MACH. SCREW 3/8 LG. FOR 1/16" AND 3/32" BOARD 7/16" LG. FOR 1/8" BOARD.
6. 4 LBS/2.3 KG MIN PIN RETENTION IN BOTH DIRECTIONS. (SEE TABLE)
7. HEADER WITH LOW PROFILE (LP) LATCHES (SEE TABLE) ARE DESIGNED TO BE USED WITH FEMALE CONNECTORS WITHOUT STRAIN RELIEF. HEADERS WITH (STD) LATCHES (SEE TABLE) ARE DESIGNED TO BE USED WITH FEMALE CONNECTORS WITH STRAIN RELIEF.
8. PLATING ON LEAD-IN PORTION OF PIN IS MANUFACTURING OPTION.
9. SPECIAL LATCH HEIGHT TO BE USED WITH CARD CONNECTOR APPLICATION.
10. RETENTION FEATURE AVAILABLE ON CONNECTORS WITH .105/2.67, .120/3.05, OR .150/3.81 TAIL LENGTH RETENTIVE P/N INCLUDES THE LETTER "R" AFTER THE EXISTING P/N.

    EXAMPLE: 66207-XXX FOR EXISTING P/N
    66207-XXXR FOR RETENTIVE P/N.

    RETENTIVE FEATURE LOCATION - SEE TABLE
    SEE SECTION R-R ON SH. 2.

mat'l. code				tolerances unless otherwise specified			CUSTOMER COPY	FCI Electronics www.fciconnect.com	
ltr	ecn no	dr	date	linear	.XX ±.01/.3				
K					.XXX ±.005/0.13		projection	title	QUICKIE HDR, STRAIGHT 3 WALL LATCH & EJECT
					.XXXX ±.0020/0.051				
				angles	0° ±2°				
				dr	J. SHREINER	1/15/90	INCH/MM	product family QKE. HDR.	code 213
				engr	M. SMYK	1/15/90		size A dwg no 66207	sheet 3 of
				chr	M. SMYK	1/15/90	scale 2:1		
				appd	M. SMYK	1/15/90			
sheet index	revision sheet								

cage code 22526

ACAD

PRODUCT NUMBER	SIZE	DIM A	DIM B	DIM C	DIM D	DIM E	LATCHES NOTE 7	STYLE	PIN SHAPE	PIN PLATING
66207-001	2 X 5	1.330/33.78	.400/10.16	.720/18.29	.105/2.67	1.100/27.94	NO	A	RND	30µ"/0.76µ Au OVER 50µ"/1.27µ MIN Ni
-002	2 X 7	1.530/38.86	.600/15.24	.920/23.37		1.300/33.02		C		
-003	2 X 8	1.630/41.40	.700/17.78	1.020/25.91		1.400/35.56		D		
-004	2 X 10	1.830/46.48	.900/22.86	1.220/30.99		1.600/40.64				
-005	2 X 13	2.130/54.10	1.200/30.48	1.520/38.61		1.900/48.26				
-006	2 X 17	2.530/64.26	1.600/40.64	1.920/48.77		2.300/58.42				
-007	2 X 20	2.830/71.88	1.900/48.26	2.220/56.39		2.600/66.04				
-008	2 X 25	3.330/84.58	2.400/60.96	2.720/69.09		3.100/78.74				
-009	2 X 30	3.830/97.28	2.900/73.66	3.220/81.79		3.600/91.44	NO	D		
-010	2 X 5	1.330/33.78	.400/10.16	.720/18.29		1.100/27.94	STD	A		
-011	2 X 7	1.530/38.86	.600/15.24	.920/23.37		1.300/33.02		C		
-012	2 X 8	1.630/41.40	.700/17.78	1.020/25.91		1.400/35.56		D		
-013	2 X 10	1.830/46.48	.900/22.86	1.220/30.99		1.600/40.64				
-014	2 X 13	2.130/54.10	1.200/30.48	1.520/38.61		1.900/48.26				
-015	2 X 17	2.530/64.26	1.600/40.64	1.920/48.77		2.300/58.42				
-016	2 X 20	2.830/71.88	1.900/48.26	2.220/56.39		2.600/66.04				
-017	2 X 25	3.330/84.58	2.400/60.96	2.720/69.09		3.100/78.74				
-018	2 X 30	3.830/97.28	2.900/73.66	3.220/81.79		3.600/91.44	STD	D		
-019	2 X 5	1.330/33.78	.400/10.16	.720/18.29		1.100/27.94	LP	A		
-020	2 X 7	1.530/38.86	.600/15.24	.920/23.37		1.300/33.02		C		
-021	2 X 8	1.630/41.40	.700/17.78	1.020/25.91		1.400/35.56		D		
-022	2 X 10	1.830/46.48	.900/22.86	1.220/30.99		1.600/40.64				
-023	2 X 13	2.130/54.10	1.200/30.48	1.520/38.61		1.900/48.26				
-024	2 X 17	2.530/64.26	1.600/40.64	1.920/48.77		2.300/58.42				
-025	2 X 20	2.830/71.88	1.900/48.26	2.220/56.39		2.600/66.04				
-026	2 X 25	3.330/84.58	2.400/60.96	2.720/69.09		3.100/78.74				
-027	2 X 30	3.830/97.28	2.900/73.66	3.220/81.79		3.600/91.44	LP	D		
-028	2 X 5	1.330/33.78	.400/10.16	.720/18.29		1.100/27.94	NO	B		
-029	2 X 5	1.330/33.78	.400/10.16	.720/18.29		1.100/27.94	STD	B		
-030	2 X 5	1.330/33.78	.400/10.16	.720/18.29	.105/2.67	1.100/27.94	LP	B		
-031	2 X 5	1.330/33.78	.400/10.16	.720/18.29	.150/3.81		NO	A		
-032	2 X 7	1.530/38.86	.600/15.24	.920/23.37		1.300/33.02		C		
-033	2 X 8	1.630/41.40	.700/17.78	1.020/25.91		1.400/35.56		D		
-034	2 X 10	1.830/46.48	.900/22.86	1.220/30.99		1.600/40.64		D		
-035	2 X 13	2.130/54.10	1.200/30.48	1.520/38.61		1.900/48.26		D		
66207-036	2 X 17	2.530/64.26	1.600/40.64	1.920/48.77	.150/3.81	2.300/58.42	NO	D	RND	30µ"/0.76µ Au OVER 50µ"/1.27µ MIN Ni

Tous droits strictement reserves. Reproduction ou communication a des tiers interdite sous quelque forme que ce soit sans autorisation ecrite du proprietaire. Propriete de c FCI. Droits de reproduction FCI.

All rights strictly reserved. Reproduction or issue to third parties in any form whatever is not permitted without written authority from the proprietor. Property of FCI. Copyright FCI.

mat'l. code			
ltr	ecn no	dr	date
K			

tolerances unless otherwise specified			
linear	.XX ±.01/.3		
	.XXX ±.005/0.13		
	.XXXX ±.0020/0.051		
angles	0° ±2°		
dr	J. SHREINER	1/15/90	
engr	M. SMYK	1/15/90	
chr	M. SMYK	1/15/90	
appd	M. SMYK	1/15/90	

CUSTOMER COPY

projection

INCH/MM

scale 2:1

FCI Electronics www.fciconnect.com

title: QUICKIE HDR, STRAIGHT 3 WALL LATCH & EJECT

product family: QKE. HDR. | code: 213

size: A | dwg no: 66207 | sheet: 4 of

cage code: 22526

sheet index | revision sheet

ACAD

PRODUCT NUMBER	SIZE	DIM A	DIM B	DIM C	DIM D	DIM E	LATCH NOTE 7	STYLE	PIN SHAPE	PIN PLATING
66207-037	2 X 20	2.830/71.88	1.900/48.26	2.220/56.39	.150/3.81	2.600/76.04	NO	D	RND	30µ"/0.76µ Au OVER 50µ"/1.27µ MIN Ni
-038	2 X 25	3.330/84.58	2.400/60.96	2.720/69.09		3.100/78.74	NO	D		
-039	2 X 30	3.830/97.28	2.900/73.66	3.220/81.79		3.600/91.44	NO	D		
-040	2 X 5	1.330/33.78	.400/10.16	.720/18.29		1.100/27.94	STD	A		
-041	2 X 7	1.530/38.86	.600/15.24	.920/23.37		1.300/33.02		C		
-042	2 X 8	1.630/41.40	.700/17.78	1.020/25.91		1.400/35.56		D		
-043	2 X 10	1.830/46.48	.900/22.86	1.220/30.99		1.600/40.64				
-044	2 X 13	2.130/54.10	1.200/30.48	1.520/38.61		1.900/48.26				
-045	2 X 17	2.530/64.26	1.600/40.64	1.920/48.77		2.300/58.42				
-046	2 X 20	2.830/71.88	1.900/48.26	2.220/56.39		2.600/76.04				
-047	2 X 25	3.330/84.58	2.400/60.96	2.720/69.09		3.100/78.74				
-048	2 X 30	3.830/97.28	2.900/73.66	3.220/81.79		3.600/91.44	STD	D		
-049	2 X 5	1.330/33.78	.400/10.16	.720/18.29		1.100/27.94	LP	A		
-050	2 X 7	1.530/38.86	.600/15.24	.920/23.37		1.300/33.02		C		
-051	2 X 8	1.630/41.40	.700/17.78	1.020/25.91		1.400/35.56		D		
-052	2 X 10	1.830/46.48	.900/22.86	1.220/30.99		1.600/40.64				
-053	2 X 13	2.130/54.10	1.200/30.48	1.520/38.61		1.900/48.26				
-054	2 X 17	2.530/64.26	1.600/40.64	1.920/48.77		2.300/58.42				
-055	2 X 20	2.830/71.88	1.900/48.26	2.220/56.39		2.600/76.04				
-056	2 X 25	3.330/84.58	2.400/60.96	2.720/69.09		3.100/78.74				
-057	2 X 30	3.830/97.28	2.900/73.66	3.220/81.79		3.600/91.44	LP	D		
-058	2 X 5	1.330/33.78	.400/10.16	.720/18.29		1.100/27.94	NO	B		
-059	2 X 5	1.330/33.78	.400/10.16	.720/18.29		1.100/27.94	STD	B		
-060	2 X 5	1.330/33.78	.400/10.16	.720/18.29	.150/3.81	1.100/27.94	LP	B	RND	
-061	2 X 5	1.330/33.78	.400/10.16	.720/18.29	.675/17.15	1.100/27.94	NO	A	SQ	
-062	2 X 7	1.530/38.86	.600/15.24	.920/23.37		1.300/33.02		C		
-063	2 X 8	1.630/41.40	.700/17.78	1.020/25.91		1.400/35.56		D		
-064	2 X 10	1.830/46.48	.900/22.86	1.220/30.99		1.600/40.64				
-065	2 X 13	2.130/54.10	1.200/30.48	1.520/38.61		1.900/48.26				
-066	2 X 17	2.530/64.26	1.600/40.64	1.920/48.77		2.300/58.42				
-067	2 X 20	2.830/71.88	1.900/48.26	2.220/56.39		2.600/76.04				
-068	2 X 25	3.330/84.58	2.400/60.96	2.720/69.09		3.100/78.74				
-069	2 X 30	3.830/97.28	2.900/73.66	3.220/81.79		3.600/91.44	NO	D		
-070	2 X 5	1.330/33.78	.400/10.16	.720/18.29		1.100/27.94	STD	A		
-071	2 X 7	1.530/38.86	.600/15.24	.920/23.37		1.300/33.02	STD	C		
66207-072	2 X 8	1.630/41.40	.700/17.78	1.020/25.91	.675/17.15	1.400/35.56	STD	D	SQ	30µ"/0.76µ Au OVER 50µ"/1.27µ MIN Ni

Tous droits strictement reserves. Reproduction ou communication a des tiers interdite sous quelque forme que ce soit sans autorisation ecrite du proprietaire.
Propriete de c FCI. Droits de reproduction FCI.

All rights strictly reserved. Reproduction or issue to third parties in any form whatever is not permitted without written authority from the proprietor.
Property of FCI. Copyright FCI.

mat'l. code			
ltr	ecn no	dr	date
K			

sheet index	revision sheet

tolerances unless otherwise specified		
linear	.XX ±.01/.3	
	.XXX ±.005/0.13	
	.XXXX ±.0020/0.051	
angles	0° ±2°	
dr	J. SHREINER	1/15/90
engr	M. SMYK	1/15/90
chr	M. SMYK	1/15/90
appd	M. SMYK	1/15/90

CUSTOMER COPY

projection

INCH/MM

scale 2:1

FCI Electronics www.fciconnect.com

title: QUICKIE HDR, STRAIGHT 3 WALL LATCH & EJECT

product family: QKE. HDR.

code: 213

size: A

dwg no: 66207

sheet: 5 of

cage code: 22526

ACAD

PRODUCT NUMBER	SIZE	DIM A	DIM B	DIM C	DIM D	DIM E	LATCH NOTE 7	STYLE	PIN SHAPE	PIN PLATING
66207-073	2 X 10	1.830/46.48	.900/22.86	1.220/30.99	.675/17.15	1.600/40.64	STD	D	SQ	30µ"/0.76µ Au OVER 50µ"/1.27µ MIN Ni
-074	2 X 13	2.130/54.10	1.200/30.48	1.520/38.61		1.900/48.26				
-075	2 X 17	2.530/64.26	1.600/40.64	1.920/48.77		2.300/58.42				
-076	2 X 20	2.830/71.88	1.900/48.26	2.220/56.39		2.600/76.04				
-077	2 X 25	3.330/84.58	2.400/60.96	2.720/69.09		3.100/78.74				
-078	2 X 30	3.830/97.28	2.900/73.66	3.220/81.79		3.600/91.44	STD	D		
-079	2 X 5	1.330/33.78	.400/10.16	.720/18.29		1.100/27.94	LP	A		
-080	2 X 7	1.530/38.86	.600/15.24	.920/23.37		1.300/33.02		C		
-081	2 X 8	1.630/41.40	.700/17.78	1.020/25.91		1.400/35.56		D		
-082	2 X 10	1.830/46.48	.900/22.86	1.220/30.99		1.600/40.64				
-083	2 X 13	2.130/54.10	1.200/30.48	1.520/38.61		1.900/48.26				
-084	2 X 17	2.530/64.26	1.600/40.64	1.920/48.77		2.300/58.42				
-085	2 X 20	2.830/71.88	1.900/48.26	2.220/56.39		2.600/76.04				
-086	2 X 25	3.330/84.58	2.400/60.96	2.720/69.09		3.100/78.74				
-087	2 X 30	3.830/97.28	2.900/73.66	3.220/81.79		3.600/91.44	LP	D		
-088	2 X 5	1.330/33.78	.400/10.16	.720/18.29		1.100/27.94	NO	B		
-089	2 X 5	1.330/33.78	.400/10.16	.720/18.29		1.100/27.94	STD	B		
-090	2 X 5	1.330/33.78	.400/10.16	.720/18.29	.675/17.15	1.100/27.94	LP	B	SQ	
-091	2 X 12	2.030/45.56	1.100/27.94	1.420/36.07	.105/2.67	1.800/45.72	NO	D	RND	
-092					.105/2.67		STD			
-093					.105/2.67		LP			
-094					.150/3.81		NO			
-095					.150/3.81		STD			
-096					.150/3.81		LP		RND	
-097					.675/17.15		NO		SQ	
-098					.675/17.15		STD		SQ	
-099	2 X 12	2.030/45.56	1.100/27.94	1.420/36.07	.675/17.15	1.800/45.72	LP		SQ	
-100	2 X 15	2.330/59.18	1.400/35.56	1.720/43.69	.105/2.67	2.100/53.34	NO		RND	
-101					.105/2.67		STD			
-102					.105/2.67		LP			
-103					.150/3.81		NO			
-104					.150/3.81		STD			
-105					.150/3.81		LP		RND	
-106					.675/17.15		NO		SQ	
-107					.675/17.15		STD		SQ	
66207-108	2 X 15	2.330/59.18	1.400/35.56	1.720/43.69	.675/17.15	2.100/53.34	LP	D	SQ	30µ"/0.76µ Au OVER 50µ"/1.27µ MIN Ni

Tous droits strictement reserves. Reproduction ou communication a des tiers interdite sous quelque forme que ce soit sans autorisation ecrite du proprietaire. Propriete de c FCI. Droits de reproduction FCI.

All rights strictly reserved. Reproduction or issue to third parties in any form whatever is not permitted without written authority from the proprietor. Property of FCI. Copyright FCI.

mat'l. code			
ltr	ecn no	dr	date
K			

tolerances unless otherwise specified		
linear	.XX ±.01/.3	
	.XXX ±.005/0.13	
	.XXXX ±.0020/0.051	
angles	0° ±2°	
dr	J. SHREINER	1/15/90
engr	M. SMYK	1/15/90
chr	M. SMYK	1/15/90
appd	M. SMYK	1/15/90

| sheet index | revision sheet | | | | |

PRODUCT NUMBER	SIZE	DIM A	DIM B	DIM C	DIM D	DIM E	LATCH	STYLE	PIN SHAPE	PIN PLATING	PIN OMIT
66207-109	2 X 22	3.030/76.96	2.100/53.34	2.420/61.47	.105/2.67	2.800/81.12	NO	D	RND	30µ"/0.76µ Au OVER 50µ"/1.27µ Ni MIN	
-110					.105/2.67		STD				
-111					.105/2.67		LP				
-112					.150/3.81		NO				
-113					.150/3.81		STD				
-114					.150/3.81		LP		RND		
-115					.675/17.15		NO		SQ		
-116					.675/17.15		STD		SQ		
-117	2 X 22	3.030/76.96	2.100/53.34	2.420/61.47	.675/17.15	2.800/81.12	LP		SQ	30µ"/0.76µ Au OVER 50µ"/1.27µ Ni MIN	
-118	2 X 17	2.530/64.26	1.600/40.64	1.920/48.77	.150/3.81	2.300/58.42	LP		RND	15µ"/0.38µ Au OVER 50µ"/1.27µ Ni MIN	
-119	2 X 17	2.530/64.26	1.600/40.64	1.920/48.77	.150/3.81	2.300/58.42	NO		RND	15µ"/0.38µ Au OVER 50µ"/1.27µ Ni MIN	
-120	2 X 10	1.830/46.48	.900/22.86	1.220/30.99	.105/2.67	1.600/40.64	NOTE 9		SQ	30µ"/0.76µ Au OVER 50µ"/1.27µ Ni MIN	
-121	2 X 10	1.830/46.48	.900/22.86	1.220/30.99	.150/3.81	1.600/40.64	NOTE 9	D	RND		
-122	2 X 5	1.330/33.78	.400/10.16	.720/18.29	.105/2.67	1.100/27.94	NOTE 9	B	SQ		
-123	2 X 5	1.330/33.78	.400/10.16	.720/18.29		1.100/27.94	NO	B			
-124	2 X 10	1.830/46.48	.900/22.86	1.220/30.99		1.600/40.64	NO	D			
-125	2 X 25	3.330/84.58	2.400/60.96	2.720/69.09		3.100/78.74	NOTE 9	D			
-126	2 X 25	3.330/84.58	2.400/60.96	2.720/69.09		3.100/78.74	NO	D			
-127	2 X 5	1.330/33.78	.400/10.16	.720/18.29		1.100/27.94	NO	A			
-128	2 X 5	1.330/33.78	.400/10.16	.720/18.29		1.100/27.94	NOTE 9	A			
-129	2 X 7	1.530/38.86	.600/15.24	.920/23.37		1.300/33.02	NO	C			
-130	2 X 7	1.530/38.86	.600/15.24	.920/23.37		1.300/33.02	NOTE 9	C			
-131	2 X 8	1.630/41.40	.700/17.78	1.020/25.91		1.400/35.56	NO	D			
-132	2 X 8	1.630/41.40	.700/17.78	1.020/25.91		1.400/35.56	NOTE 9				
-133	2 X 13	2.130/54.10	1.200/30.48	1.520/38.61		1.900/48.26	NO				
-134	2 X 13	2.130/54.10	1.200/30.48	1.520/38.61		1.900/48.26	NOTE 9				
-135	2 X 17	2.530/64.26	1.600/40.64	1.920/48.77		2.300/58.42	NO				
-136	2 X 17	2.530/64.26	1.600/40.64	1.920/48.77		2.300/58.42	NOTE 9				
-137	2 X 20	2.830/71.88	1.900/48.26	2.220/56.39		2.600/66.04	NO				
-138	2 X 20	2.830/71.88	1.900/48.26	2.220/56.39		2.600/66.04	NOTE 9				
-139	2 X 30	3.830/97.28	2.900/73.66	3.220/81.79		3.600/91.44	NO				
-140	2 X 30	3.830/97.28	2.900/73.66	3.220/81.79		3.600/91.44	NOTE 9	D	SQ	30µ"/0.76µ Au OVER 50µ"/1.27µ Ni MIN	
-141	2 X 5	1.330/33.78	.400/10.16	.720/18.29	.105/2.67	1.100/27.94	LP	A	RND	15µ"/0.38µ Au OVER 50µ"/1.27µ Ni MIN	10
-142	2 X 5	1.330/33.78	.400/10.16	.720/18.29	.120/27.94	1.100/27.94	LP	A	RND	15µ"/0.38µ Au OVER 50µ"/1.27µ Ni MIN	10
-143	2 X 5	1.330/33.78	.400/10.16	.720/18.29	.105/2.67	1.100/27.94	NO	A	RND	15µ"/0.38µ Au OVER 50µ"/1.27µ Ni MIN	10
66207-144	2 X 5	1.330/33.78	.400/10.16	.720/18.29	.120/27.94	1.100/27.94	NO	A	RND	15µ"/0.38µ Au OVER 50µ"/1.27µ Ni MIN	10

Tous droits strictement reserves. Reproduction ou communication a des tiers interdite sous quelque forme que ce soit sans autorisation ecrite du proprietaire. Propriete de c FCI. Droits de reproduction FCI.

All rights strictly reserved. Reproduction or issue to third parties in any form whatever is not permitted without written authority from the proprietor. Property of FCI. Copyright FCI.

mat'l. code			
ltr	ecn no	dr	date
K			

tolerances unless otherwise specified	
linear	.XX ±.01/.3
	.XXX ±.005/0.13
	.XXXX ±.0020/0.051
angles	0° ±2°

dr	J. SHREINER	1/15/90
engr	M. SMYK	1/15/90
chr	M. SMYK	1/15/90
appd	M. SMYK	1/15/90

CUSTOMER COPY

projection

INCH/MM

scale 2:1

FCI Electronics www.fciconnect.com

title: QUICKIE HDR, STRAIGHT 3 WALL LATCH & EJECT

product family: QKE. HDR. | code: 213

size: A | dwg no: 66207 | sheet: 7 of

cage code: 22526

sheet index	revision sheet

ACAD

PRODUCT NUMBER	SIZE	DIM A	DIM B	DIM C	DIM D	DIM E	LATCH	STYLE	PIN SHAPE	PIN PLATING	PIN OMIT
66207-145	2 X 5	1.330/33.78	.400/10.16	.720/18.29	.120/27.94	1.100/27.94	NOTE 9	A	RND	15μ"/0.38μ Au OVER 50μ"/1.27μ Ni MIN	10
66207-146	2 X 30	3.830/97.28	2.900/73.66	3.220/81.79	.150/3.81	3.600/91.44	NOTE 9	D	RND	30μ"/0.76μ Au OVER 50μ"/1.27μ Ni MIN	–

Tous droits strictement reserves. Reproduction ou communication a des tiers interdite sous quelque forme que ce soit sans autorisation ecrite du proprietaire.
Propriete de c FCI. Droits de reproduction FCI.

All rights strictly reserved. Reproduction or issue to third parties in any form whatever is not permitted without written authority from the proprietor.
Property of FCI. Copyright FCI.

mat'l. code			
ltr	ecn no	dr	date
K			

sheet index	revision sheet

tolerances unless otherwise specified		
linear	.XX ±.01/.3	
	.XXX ±.005/0.13	
	.XXXX ±.0020/0.051	
angles	0° ±2°	
dr	E KROPIEWNICKI	5/6/99
engr	L. GREEN	5/6/99
chr	L. GREEN	5/6/99
appd	L. GREEN	5/6/99

CUSTOMER COPY

projection

INCH/MM

scale 2:1

FCI Electronics www.fciconnect.com

title: QUICKIE HDR, STRAIGHT 3 WALL LATCH & EJECT

product family: QKE. HDR. code: 213

size: A dwg no: 66207 sheet: 8 of

cage code: 22526

ACAD