SERIES 62S

Compact 1/2" Package

FEATURES

- Compact Size
- Requires Minimal Behind Panel Space
- 1 Million Rotational Cycles for Low and Medium Torque, 1/2 Million for High
- 3 Million Rotations for Non-Detent Styles
- Optional Integral Pushbutton
- Choices of Cable Length and Terminations

APPLICATIONS

- Global Positioning/Driver Information Systems
- Medical Equipment

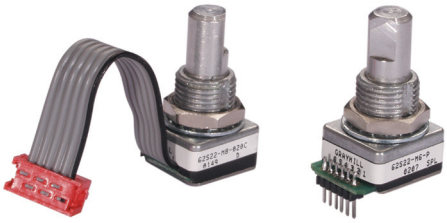

RECOMMENDED PANEL CUTOUT

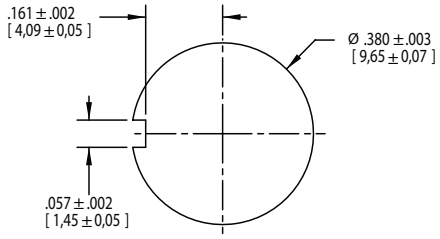

DIMENSIONS in inches (and millimeters)

Unless otherwise specified, standard tolerance is ±.010 (0,25)

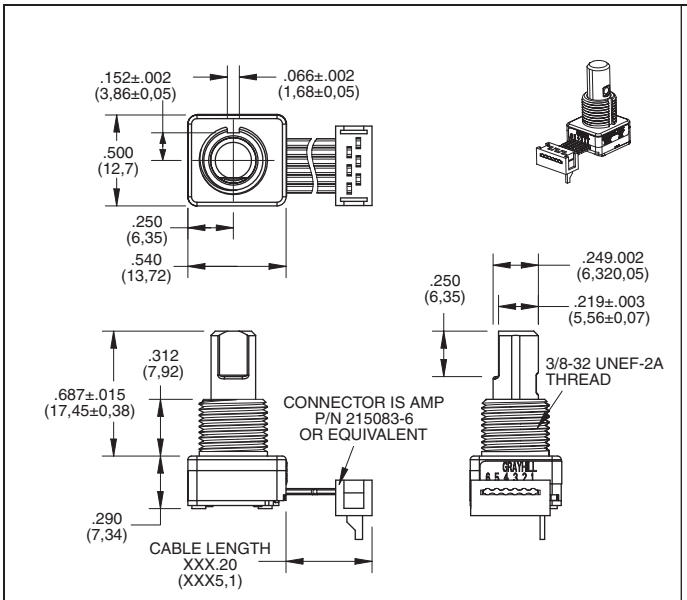

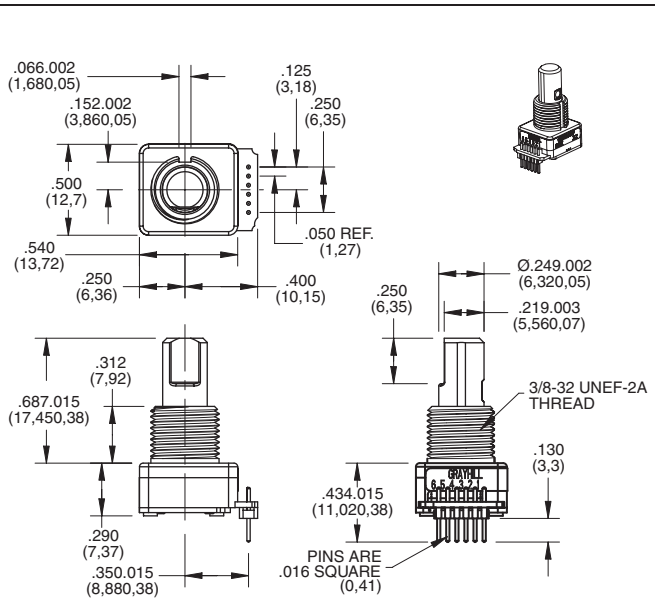

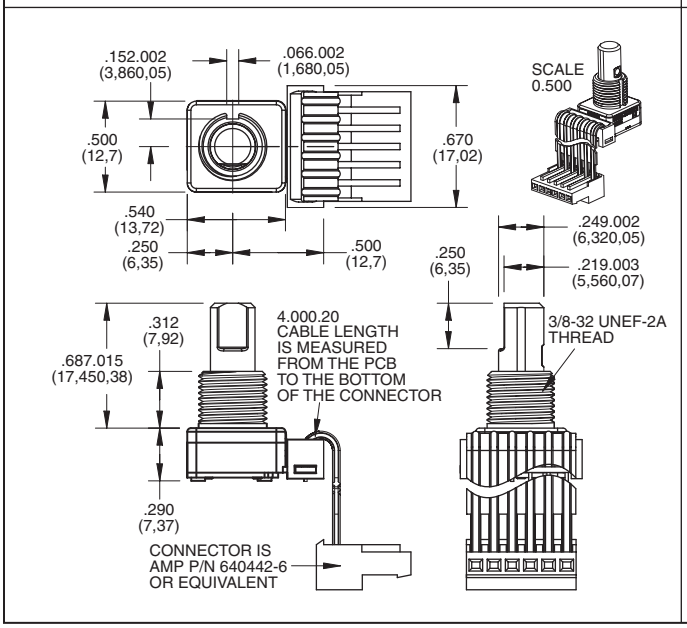

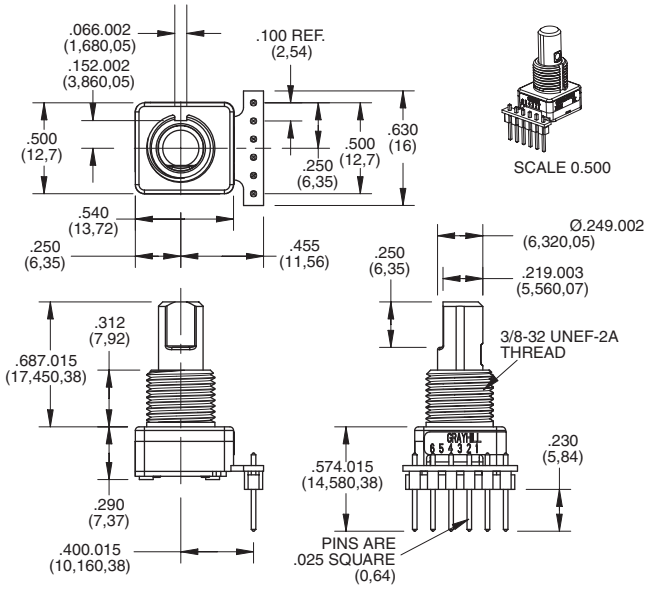

Specifications are subject to change. Please refer to the current datasheet on www.grayhill.com for the most current published specifications for this product.

CIRCUITRY, TRUTH TABLE, AND WAVEFORM Standard Quadrature 2-Bit Code

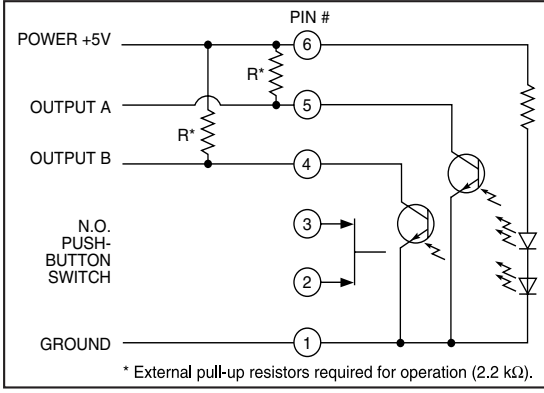

* External pull-up resistors required for operation (2.2 kΩ).

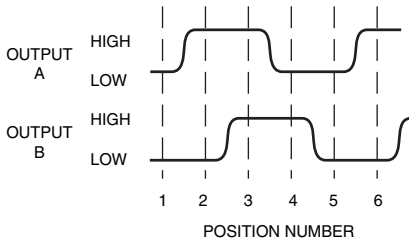

Clockwise Rotation		
Position	Output A	Output B
1		
2	●	
3	●	●
4		●

● Indicates logic high; blank indicates logic low.
Code repeats every 4 positions.

SPECIFICATIONS

Environmental Specifications

Operating Temp. Range: -40°C to 85°C
Storage Temp. Range: -55°C to 100°C
Humidity: 96 Hours at 90–95% humidity at 40°C
Mechanical Vibration: Harmonic motion with amplitude of 15G's, within a varied frequency of 10 to 2000 Hz
Mechanical Shock: Test 1: 100G for 6 mS, half sine wave with a velocity change of 12.3 ft/s; Test 2: 100G for 6 mS, sawtooth wave with a velocity change of 9.7 ft/s

Rotary Electrical and Mechanical Specifications

Operating Voltage: 5.00 ±0.25 Vdc
Supply Current: 25mA max at 5.25Vdc
Output: Open collector phototransistor, external pull up resistors are required
Output Code: 2-Bit quadrature, channel A leads channel B by 90° electrically during clockwise rotation of the shaft
Logic Output Characteristics:
Logic High shall be no less than 3.8 Vdc
Logic Low shall be no greater than 0.8Vdc
Minimum Sink Current: 2.0 mA
Power Consumption: 132mW maximum (includes power in 2 pull-up resistors)
Mechanical Life:

Non-Detent	3 Million Cycles
Low & Medium	1 Million Cycles
High	1/2 Million Cycles

1 cycle is a rotation through all positions and a full return

AVERAGE ROTATIONAL TORQUE SPECIFICATIONS			
	LOW	MEDIUM	HIGH
	±0.50 IN-OZ	±1.40 IN-OZ	±1.60 IN-OZ
8 POSITION	1.10	1.85	2.75
12 POSITION	1.00	1.70	2.95
16 POSITION	1.40	2.35	3.40
20 POSITION	1.35	2.05	2.80
24 POSITION	1.25	1.95	2.95
32 POSITION	0.95	1.40	2.15

Torque shall be within 50% of initial value throughout life
Mounting Torque: 15 in-lbs maximum
Shaft Push-Out Force: 45 lbs minimum
Shaft Pull-Out Force: 45 lbs minimum
Terminal Strength: 15 lbs minimum terminal pull-out force for cable or header termination
Solderability: 95% free of pin holes and voids

Pushbutton Electrical & Mechanical Specifications

Rating: 10 mA at 5 Vdc
Contact Resistance: <10Ω
Life: 3 million actuations minimum
Contact Bounce: <4 ms Make, <10 ms Break
Actuation Force: 9-950±150 grams, 5-510±150 grams, 4-400±100 grams, 3-300±90 grams, 2-200±75 grams
Shaft Travel: .025±.010 inch

Materials and Finishes

Bushing: Zamak 2
Shaft: Aluminum or Zamak 2
Retaining Ring: Stainless steel
Pushbutton Actuator: Zytel 70G33L
Detent Spring: Music wire
Detent Ball: Stainless steel
Code Housing: Polyamide polymer, nylon 6/10 alloy UL94HB
Code Rotor: Delrin 100
Printed Circuit Boards: NEMA grade FR-4, double clad with copper, plated with gold over nickel
Infrared Emitting Diode Chips: Gallium aluminum arsenide
Silicon Phototransistor Chips: Gold and Aluminum Alloys
Resistor: Metal oxide on ceramic substrate
Solder Pins: Brass, plated with tin
Pushbutton Dome: Stainless steel
Backplate: Stainless steel
Cable: Copper stranded with topcoat in PVC insulation (Cable version only)
Connector (.050 Center): PA4.6 with tin over nickel plated phosphor bronze
Connector (.100 Center): Nylon UL94V-2, tin plated copper alloy
Label: TT406 Thermal transfer cast film
Solder: Sn/Ag/Cu, Lead-Free, No Clean
Lubricating Grease: NYE nyogel 774L
Hex Nut: Nickel, plated with brass
Lockwasher: Zinc Plated Spring Steel with Clear Trivalent Chromate Finish
Header: Hi-Temp glass filled thermoplastic UL94V-0, phoshor bronze (pin versions only)
Strain Relief: Glass filled thermoplastic (.100 center cable versions only)

OPTIONS

Contact Grayhill for custom terminations, shaft and bushing configurations, rotational torque pushbutton force, and code output.

ORDERING INFORMATION

62SXX-XX-040X

Angle of Throw
45=45° for Code Change and 8 Detent Positions
30=30° for Code Change and 12 Detent Positions
22=22.5° for Code Change and 16 Detent Positions
18=18° for Code Change and 20 Detent Positions
15=15° for Code Change and 24 Detent Positions
11=11.25° for Code Change and 32 Detent Positions

Rotational Torque Option
N = Non-detent
L = Low Torque (available with 0, 4, 5, 9 pushbutton only)
M = Medium Torque (available with 0, 5, 9 pushbutton only)
H = High Torque (available with 0, 9 pushbutton only)

Termination
C = .050 Center Ribbon Cable with Connector
S = .050 Center Ribbon Cable with .100 Stripped End
P = .050 Center Pins with .130 Length
CH = .100 Center Ribbon Cable with Connector
SH = .100 Center Ribbon Cable with .100 Stripped End
PH = .100 Center Pins with .230 Length

Cable Length
Cable Termination: 040=4.0in or 040in. Cable is terminated with Amp Connector P/N 3-640442-6
See Amp Mateability Guide for mating connector details.

Pushbutton Option

0 = NO PUSHBUTTON	4 = 400 Grams
9 = 950 Grams	3 = 300 Grams
5 = 510 Grams	2 = 200 Grams