DEUTSCH AUTOSPORT INTERCONNECTION SOUTIONS FOR PROFESSIONAL MOTORSPORTS

HIGH-PERFORMANCE CONNECTORS DESIGNED FOR HARSH-ENVIRONMENT MOTORSPORT

DEUTSCH Autosport Interconnection Solutions

DEDICATED INDUSTRIAL ENGINEERING & MANUFACTURING SITES

- Bydgoszcz, Poland
- Christchurch, New Zealand
- Hermosillo, Mexico
- Landisville, USA
- Trutnov, Czech Republic
- Tokyo, Japan
- Shanghai, China
- Darmstadt, Germany
- Harrisburg, USA
- Hastings, UK

PRODUCT INFORMATION CENTERS (PIC)

- Austria
- Australia
- Belgium
- Brazil
- China
- Czech Republic
- Denmark
- Estonia
- Finland
- France
- Germany
- Greece
- Hungary
- India
- Ireland
- Italy
- Japan
- Latvia
- Lithuania
- Luxembourg
- Netherlands
- Norway
- Poland
- Portugal
- Russia
- Slovakia
- Slovenia
- South Africa
- South Korea
- Spain
- Sweden
- Switzerland
- Taiwan
- Turkey
- United Kingdom
- United States

DEUTSCH AUTOSPORT INTERCONNECTION SOLUTIONS

CONSISTENTLY LEADING THE WAY IN RESEARCH, DEVELOPMENT, INNOVATION, RELIABILITY & SERVICE

TE Connectivity (TE) with its DEUTSCH Autosport connection systems offers unrivalled expertise in the design and manufacture of interconnection solutions for harsh environments. With over 40-years of international experience, DEUTSCH products are well proven in the Aerospace, Defence, Industrial Transportation and Autosport markets.

In the early 1990's DEUTSCH products were the first to pioneer a range of interconnection solutions specifically for the Autosport industry, enabling them to reach their position as market leader. The AS Series and AS Micro Series radically changed the face of autosport connection technology. Following the success of these products, TE's DEUTSCH Autosport team was established to attend to the growing needs of the autosport teams and harness houses.

A knowledgeable and experienced team of experts, supported with considerable investment in research and backed by an international distribution network, ensures TE's DEUTSCH autosport range of connectors continue to meet the constantly evolving technical challenges faced in this dynamic and demanding industry.

Specified across the entire autosport industry, TE's DEUTSCH products dominance in the autosport industry has been proven many times, with world champions across practically every discipline choosing TE's DEUTSCH Autosport connectors as the most reliable, light weight and technologically advanced products available.

CONTENTS

4 Product Overview
6 AS Size 1 Micro Xtra^{LITE} HE 4 Way Connector
8 AS Micro Xtra^{LITE} HE 3 Way Connector
10 AS Micro Xtra^{LITE} HE 5 Way Connector
12 AS Micro Xtra^{LITE} HE 6 Way Connector
14 AS Ultra^{LITE} HE and AS Micro Ultra^{LITE} HE (ASU) Series Connectors
16 AS Micro^{LITE} HE (ASL) Series Connectors
18 AS Rally Micro (ASR) Series Connectors
20 AS Composite (ASC) Series Connectors
22 AS Mini Series Connectors
24 AS Series Connectors
30 AS Double Density (ASDD) Series Connectors
32 AS Micro HE Hermetic Series Connectors
33 AS Micro Hermetic (Jam-Nut) Series Connectors
35 AS Hermetic Fuel Tank Series Connectors
36 AS Micro^{LITE} HE Fuel Immersible Series Connectors
38 AS Heavy Duty (ASHD) Series Connectors
40 AS Co-ax Series Connectors
40 Portable Antenna
41 Special Contacts
42 AS4 Flangless Option
42 Clinchnut AS Series Connectors
43 Low Profile PCB Connectors
44 AS3 Through Bulkhead
45 Fibre Optics Series Connectors
45 Black Zinc Nickel Option
46 Termination Boots and Accessories
47 How to Order
48 Reference Guide

Product Overview

The original autosport connector – the AS Series connector – continues to set the standard for the autosport industry. Invented by TE's DEUTSCH autosport engineers for the 93/94 season, the AS Series connector has been used by race winning teams throughout autosport ever since.

TE Connectivity (TE) with its DEUTSCH connectors continues to push the boundaries of technology and innovation, consistently driving the market forwards with new products that match the ever increasing demands of lower weight, smaller size and better performance. All DEUTSCH connectors are thermal cycle tested and environmentally sealed to IP67 when mated*. All DEUTSCH autosport connectors also offer:

- Compact design/minimum space envelope
- Interfacial & wire sealing
- Boot termination feature
- PCB option
- Universal option available (not ASC)
- Standard crimp tooling
- Suitable for blind mating
- Visual indication of keyway orientation of connector
- Scoop-proof interface
- Shell-to-shell grounding (not ASC)
- Positive locking coupling mechanism
- No need for backshells or boot termination
- In-line and two hole mounting styles (not ASC)
- Surface finishing options
- Keyway options.

** 1 metre for 30 minutes minimum*

MATERIALS

Shell / coupling ring: High strength aluminum alloy with a conductive black zinc finish**

Contacts: Gold plated crimp contacts*

Insulators: Thermoplastic

Interface / wire seals: Fluorinated silicone.

*Except hermetic connectors

**Except hermetic and ASC connectors

VIBRATION

All connectors undergo three rigorous tests for vibration and all exceed the following:

Dynamic test - random on random 60g RMS in 3 axis.

Endurance test - random 57g RMS in 2 axis for 8 hours each axis.

Sinusoidal resonance to over 75g.

FLUID RESISTANCE

All connectors show no damage when exposed to most fluids used in most autosport applications.

AS MICRO XTRA^{LITE} HE (ASX) SERIES CONNECTORS

The AS Micro Xtra^{Lite} HE connectors offer teams the smallest, lightest package for three, four, five and six wires. The AS Micro Xtra^{Lite} HE 6-way is the shortest, lightest AS connector for six wires, offering a solution where space is at its most restrictive. Refer to pages 6,8, 10 and 12 for technical specifications.

AS MICRO ULTRA^{LITE} HE (ASU) SERIES CONNECTORS

The AS Micro Ultra^{Lite} HE connectors offer the teams a small and lightweight connector for 3 and 5 wires. The AS Micro Ultra^{Lite} HE connectors are a perfect solution where space and weight are restricted. Refer to page 14 for technical specifications.

AS MICRO^{LITE} HE (ASL) SERIES CONNECTORS

The Micro^{Lite} HE connector is in excess of 30% lighter than the original AS Micro HE connector and approximately 8mm shorter, whilst still retaining all the critical features including the renowned TE's DEUTSCH #23 contacts. The AS Micro^{Lite} HE connector is fully intermateable with the AS Micro HE connector. Refer to page 16 for technical specifications.

AS RALLY MICRO (ASR) SERIES CONNECTORS

An evolution of the AS Micro^{Lite} HE connector, the AS Rally Micro connector has been created with direct input from World Rally Teams. A wider coupling ring and more knurling enables mechanics wearing gloves to get a better grip when connecting and disconnecting in severe environments (snow, ice and mud). Refer to page 18 for technical specifications.

AS COMPOSITE (ASC) SERIES CONNECTORS

Made as one unit, in a military approved, rugged thermoplastic housing, the AS Composite connector is extremely resistant to vibration. Refer to page 20 for technical specifications.

AS MINI SERIES CONNECTORS

The AS Mini Series connector bridges the gap between the existing standard AS Series (Size 8) and the AS Micro range (Size 6), offering 6-way and 3-way connectors in three shell styles. Refer to page 22 for technical specifications.

Product Overview

AS SERIES CONNECTORS

Developed by TE's DEUTSCH engineers from the MIL-C-38999 Series 1.5 (Eurofighter connector), the AS Series connector was the first range of high specification connectors designed by TE's DEUTSCH Autosport specifically for the autosport market. The AS Series connector offers weight and space saving over standard military designs and is available a wide variety of options, with medium and high density arrangements up to 128 ways with four shell styles, and five keyway orientations. Refer to page 24 for technical specifications.

AS DOUBLE DENSITY (ASDD) SERIES CONNECTORS

Next generation connector technology developed by TE's DEUTSCH Autosport, which brings together high density and high performance, inline with racing teams using smaller wire sizes. The AS Double Density range allows almost double the number of contacts to be packaged in the same shell as compared to the standard AS Series connectors. Refer to page 30 for technical specifications.

AS MICRO HE HERMETIC SERIES CONNECTORS

A unique hermetic receptacle developed by TE's DEUTSCH Autosport for transducers, sensors and instrumentation where space and performance is critical. The AS Micro HE Hermetic Series connector offers high density, harsh environment sealing as standard and is more compact than any other product currently available on the market. Mounting and ease of termination has also been a major consideration with PCB style contacts and weld mounting (316 St) offered as standard. Refer to page 32 for technical specifications.

AS MICRO HERMETIC (JAM-NUT) SERIES CONNECTORS

An evolution of the AS Micro HE Hermetic connectors featuring a jam-nut, this connector is ideally suited to fuel tank applications. Refer to page 33 for technical specifications.

AS HERMETIC FUEL TANK SERIES CONNECTORS

A range of hermetically sealed connectors designed specifically for autosport fuel tank applications. AS Hermetic Fuel Tank connector provides a high degree of performance where normal resilient connectors would fail, by using glass to metal sealing in place of traditional plastic and elastomer inserts. Connectors are supplied with a fuel immersible specification o-ring to provide a high standard of sealing between the connector and bulkhead. Refer to page 34 for technical specifications.

AS MICRO^{LITE} HE FUEL IMMERSIBLE SERIES CONNECTORS

An evolution of the AS Micro^{Lite} connector, the AS Micro^{Lite} Fuel Immersible connector contains a unique DEUTSCH designed fuel resistant elastomer insert which offers excellent resistance to racing fuel. An upgraded hermetic version, including an inline receptacle is also available. Refer to page 36 for technical specifications.

AS HEAVY DUTY (ASHD) SERIES CONNECTORS

A range of power connectors designed specifically for Autosport high current applications. The AS Heavy Duty connectors are ideally suited to battery, alternator, starter motor and energy recovery system applications. Specially designed low insertion / extraction force contacts ensure maximum performance in extreme conditions. Refer to page 38 for technical specifications.

FIBRE OPTICS SERIES CONNECTORS

TE's DEUTSCH Autosport connectors also offer Fiber Optic solutions. Refer to page 45 at the back of this brochure for more information.

AS Size 1 Micro Xtra[LITE] HE 4 Way Connector

Ultra compact design (size 01 shell)

- Minimum space envelope
- 4 contacts Size #24
- PCB option
- Smaller and lighter than AS Ultra[LITE] (ASU) series connectors

Easy installation

- Positive locking coupling mechanism
- Suitable for blind mating
- Scoop proof interface
- Boot termination feature

Built to withstand harsh environments

- Conductive black zinc nickel finish
- Interfacial wire sealing
- Bonded and sealed insert to help prevent moisture ingress

Plug Assembly

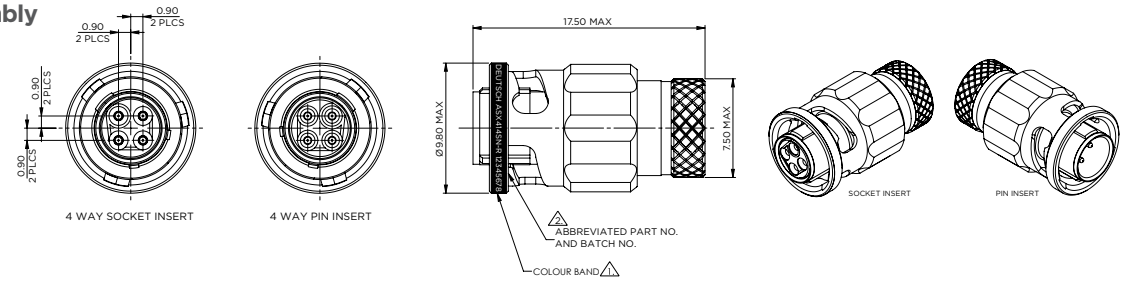

Receptacle Assembly, 2-Hole Flange

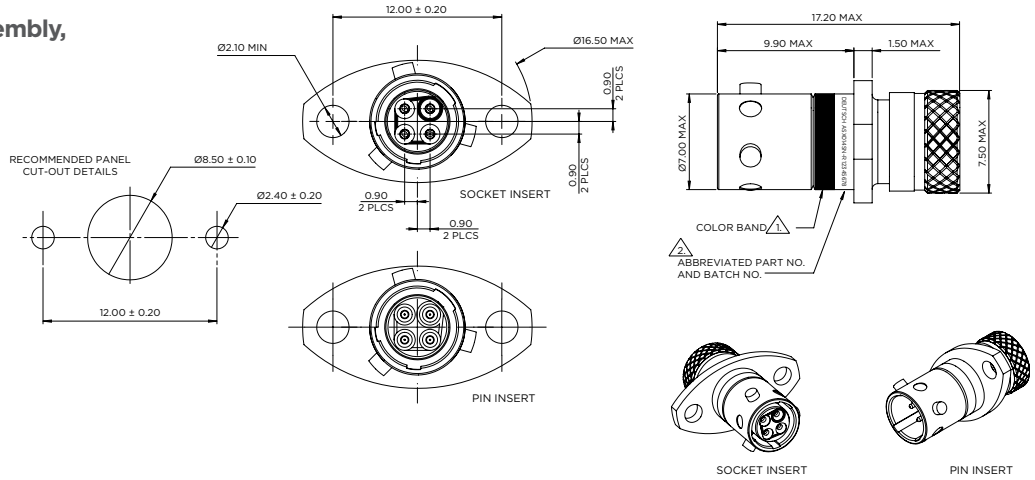

Receptacle Assembly, Half Flange

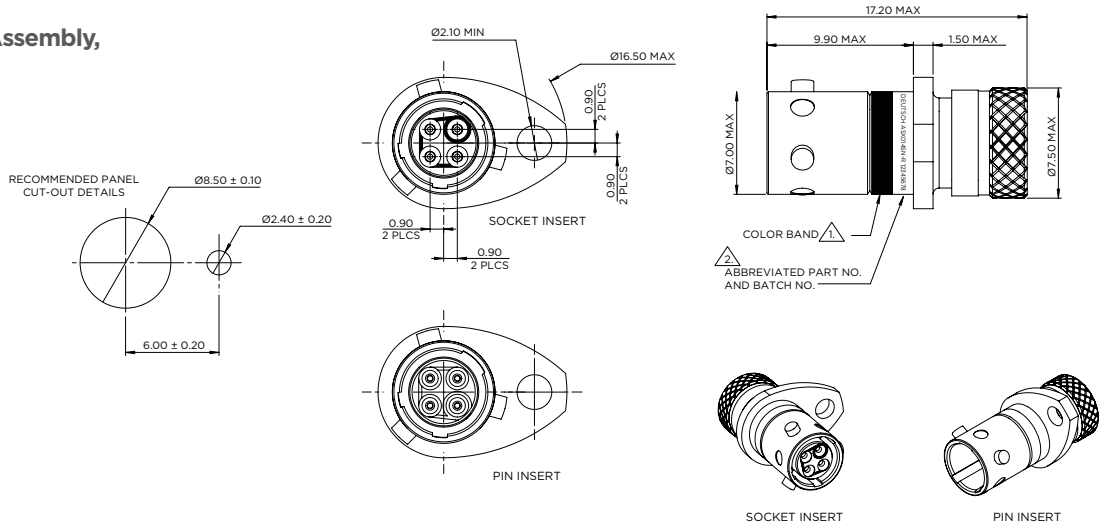

All dimensions are in mm unless otherwise stated.

AS Size 1 Micro Xtra[LITE] HE 4 Way Connector

GENERAL SPECIFICATION

No. of Ways	Contact Size	Shell Size	Max. Current (Amps)	Durability (Cycles of Engagement & Disengagement)	Dielectric Withstanding Voltage (VAC)	No. of Keyway Orientations	Wire Sealing (mm)		Temperature (˚C)*	
							Min.	Max.	Min.	Max.
4	24	01	3	500	1000	6	0.56	1.02	-55	+170

* The upper limit is the maximum internal hot-spot temperature resulting from the combination of the ambient temperature and heating due to current.
Contact Technical Support for more detail of specific products to meet your sealed electrical connection requirements.

CONTACTS & TOOLING PART NUMBERS

Contact Size	Socket	Pin	PCB Socket	PCB Pin	Filler Plug	Ins/Ext Tool	Crimp Tool	Socket Positioner	Pin Positioner
24	612879-99	612876-99	611292	611661	600300-24	605837	M22520/2-01	605840	605839

ORDERING INFORMATION

ASX 0 01 04 S N HE 99 111J

- **Series Prefix** (ASX)
- **Shell Style** (0)
- **Shell Size** (01)
- **Contact Layout** (04)
- **Contact Type:** (P = Pin, S = Socket) (S)
- **Orientation** ⚠ (N)
- **Harsh Environment** (HE)
- **Plating Finish:** (-99 = Zinc Nickel) (99)
- **Modification Code** (111J)

Pro Cap 4 Way Plug

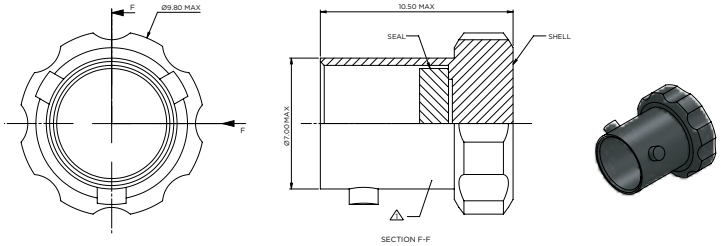

Pro Cap 4 Way Receptacle

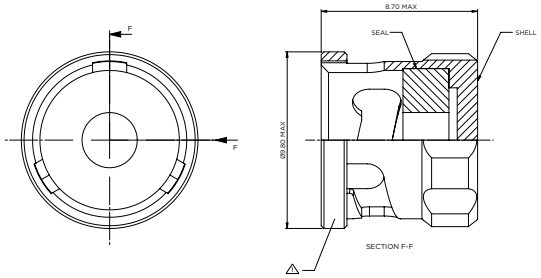

ACCESSORIES PART NUMBERS

Part Number	
Nut Plate	Gasket
ATM396-1	GV-1

	Boot Information	
	Straight	90 degree
Raychem	203W301-25-G02	223W601

Pro Cap	
Socket	Pin
611292	611661

AS Micro Xtra^{LITE} HE 3 Way Connectors

Ultra compact design (Size 02 shell)

- Minimum space envelope
- 3 contacts Size #22
- PCB option
- Smaller and lighter than AS Ultra^{LITE} (ASU) series connectors

Easy installation

- Positive locking coupling mechanism
- Suitable for blind mating
- Scoop proof interface
- Boot termination feature

Built to withstand harsh environments

- Conductive black zinc finish
- Interfacial wire sealing
- Bonded and sealed insert to prevent moisture ingress

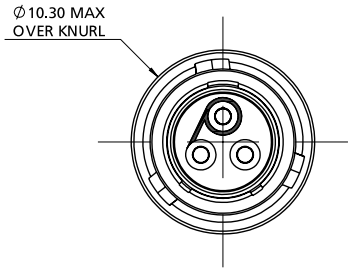

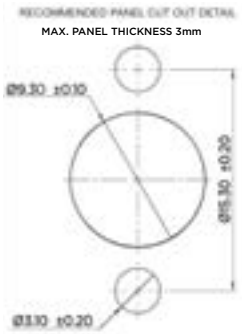

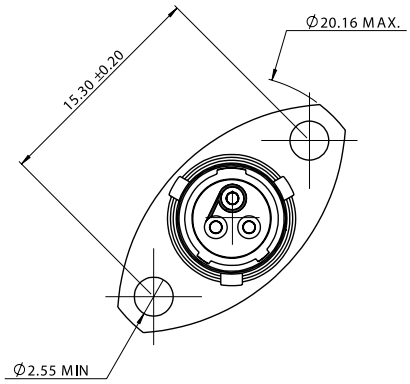

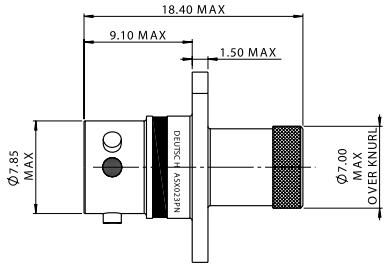

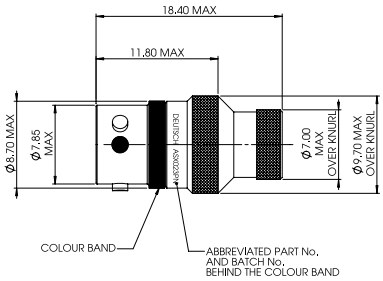

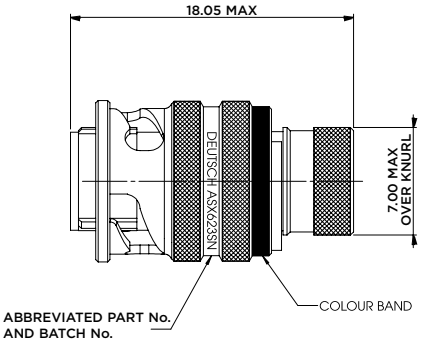

All dimensions are in mm unless otherwise stated.

AS Micro Xtra^{LITE} HE 3 Way Connectors

GENERAL SPECIFICATION

No. of Ways	Contact Size	Shell Size	Max. Current (Amps)	Durability (Cycles of Engagement & Disengagement)	Dielectric Withstanding Voltage (VAC)	No. of Keyway Orientations	Wire Sealing (mm)		Temperature (˚C)*	
							Min.	Max.	Min.	Max.
3	22	02	3	500	1500	6	0.76	1.37	-55	+170

* The upper limit is the maximum internal hot-spot temperature resulting from the combination of the ambient temperature and heating due to current.
Contact Autosport Technical Support for more detail of specific products to meet your sealed electrical connection requirements.

CONTACTS & TOOLING PART NUMBERS

Contact Size	Socket	Pin	PCB Socket	PCB Pin	Filler Plug	Ins/Ext Tool	Crimp Tool	Socket Positioner	Pin Positioner
22	604984	604946-31	611282	611254-31	600300-22	M81969/14-01	M22520/2-01	605464	605463

ORDERING INFORMATION

ASX * 02 — 03 * * - HE **

Range Ref:

Style:
0 = 2 Hole Flange Receptacle
1 = Inline Receptacle
2 = 2 Hole Flange Receptacle with PCB Contacts
6 = Free Plug

Shell Size:

Contact Arrangement:
03

Insert Type:
P = Pin
S = Socket

Shell Keyways:
N = Red (Standard)
A = Yellow
B = Blue
C = Orange
D = Green
E = Grey
U = Violet
(U = Universal for Test Harnesses - Plug Type 6 only)

HE: Harsh Environment

Modification Code:

ACCESSORIES PART NUMBERS

Part Number	
Nut Plate	Gasket
ATM396-2	GV-2

Pro Cap	
Receptacle	Plug
611545	611546

	Boot Information	
	Straight	90 Degree
Raychem	203W301-25-G02	223W601
Hellermann	1037-4-G	1182-4-G

AS Micro Xtra^{LITE} HE 5 Way Connectors

Ultra compact design (size 02 shell)

- Minimum space envelope
- 5 contacts Size #24
- PCB option
- Smaller and lighter than AS Ultra^{LITE} (ASU) series connectors

Easy installation

- Positive locking coupling mechanism
- Suitable for blind mating
- Scoop proof interface
- Boot termination feature

Built to withstand harsh environments

- Conductive black zinc finish
- Interfacial wire sealing
- Bonded and sealed insert to prevent moisture ingress

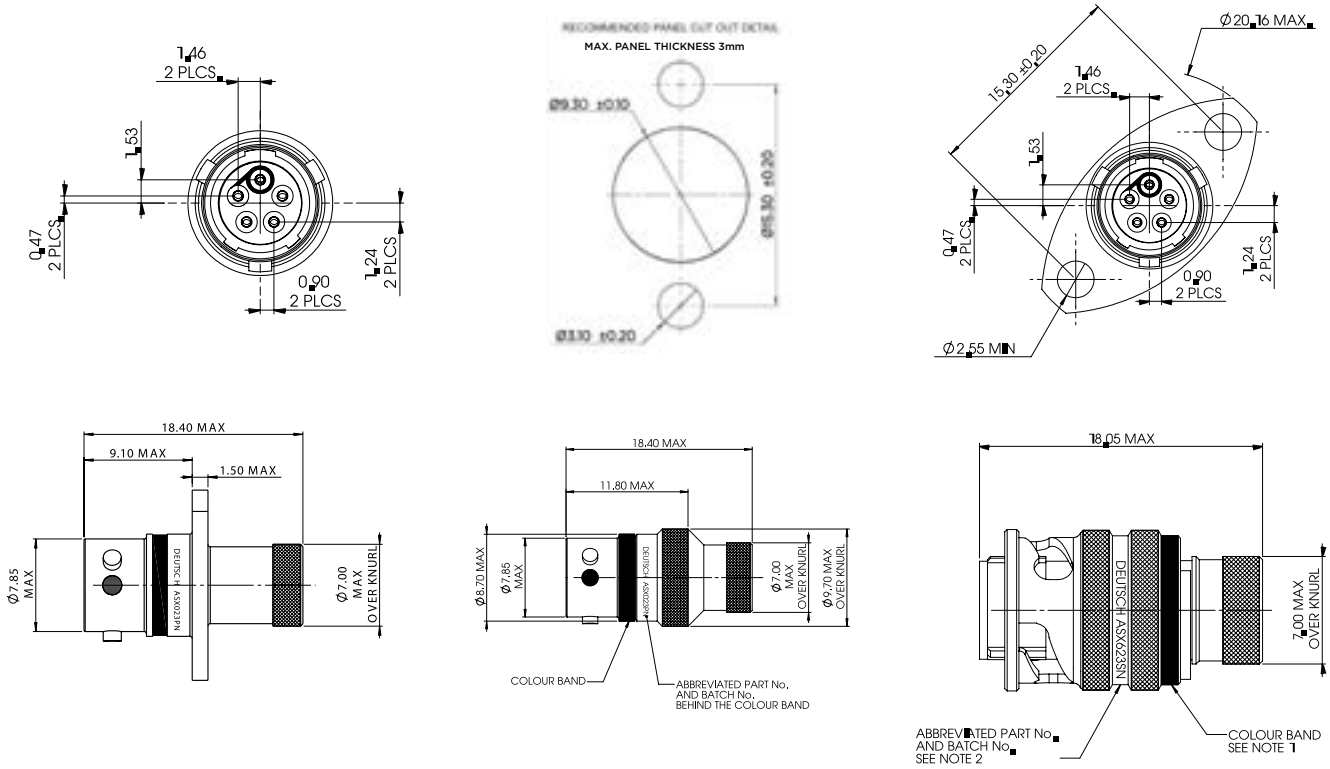

All dimensions are in mm unless otherwise stated.

AS Micro Xtra^{LITE} HE 5 Way Connectors

GENERAL SPECIFICATION

No. of Ways	Contact Size	Shell Size	Max. Current (Amps)	Durability (Cycles of Engagement & Disengagement)	Dielectric Withstanding Voltage (VAC)	No. of Keyway Orientations	Wire Sealing (mm)		Temperature (˚C)*	
							Min.	Max.	Min.	Max.
5	24	02	3	500	1000	6	0.56	1.02	-55	+170

* The upper limit is the maximum internal hot-spot temperature resulting from the combination of the ambient temperature and heating due to current.
Contact Autosport Technical Support for more detail of specific products to meet your sealed electrical connection requirements.

CONTACTS & TOOLING PART NUMBERS

Contact Size	Socket	Pin	PCB Socket	PCB Pin	Filler Plug	Ins/Ext Tool	Crimp Tool	Socket Positioner	Pin Positioner
24	605704	605705-31	611292	611661-31	600300-24	605837	M22520/2-01	605840	605839

ORDERING INFORMATION

ASX * 02 – 05 * * -HE **

Range Ref:

Style:
0 = 2 Hole Flange Receptacle
1 = Inline Receptacle
2 = 2 Hole Flange Receptacle with PCB Contacts
6 = Free Plug

Shell Size:

Contact Arrangement:
05

Insert Type:
P = Pin
S = Socket

Shell Keyways:
N = Red (Standard)
A = Yellow
B = Blue
C = Orange
D = Green
E = Grey
U = Violet
(U = Universal for Test Harnesses-
Plug Type 6 only)

HE: Harsh Environment

Modification Code:

ACCESSORIES PART NUMBERS

Part Number	
Nut Plate	Gasket
ATM396-2	GV-2

	Boot Information	
	Straight	90 Degree
Raychem	203W301-25-G02	223W601
Hellermann	1037-4-G	1182-4-G

Pro Cap	
Receptacle	Plug
611545	611546

AS Micro Xtra^{LITE} HE 6 Way Connectors

Ultra compact design (size 02 shell)

- Minimum space envelope
- 6 contacts Size #24
- PCB option
- Smaller and lighter than AS Ultra^{LITE} (ASU) series connectors

Easy installation

- Positive locking coupling mechanism
- Suitable for blind mating
- Scoop proof interface
- Boot termination feature

Built to withstand harsh environments

- Conductive black zinc finish
- Interfacial wire sealing
- Gold-plated crimp contacts
- Bonded and sealed insert to prevent moisture ingress

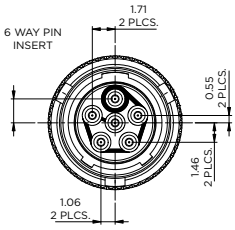

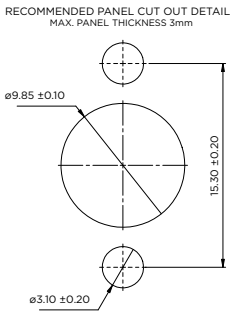

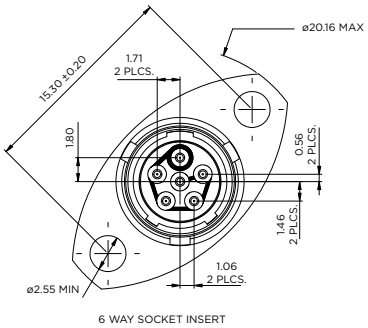

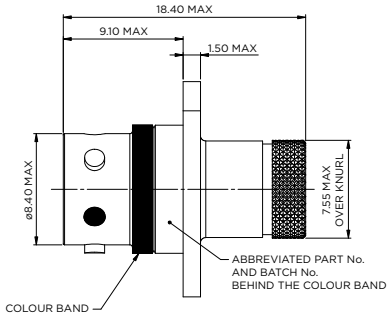

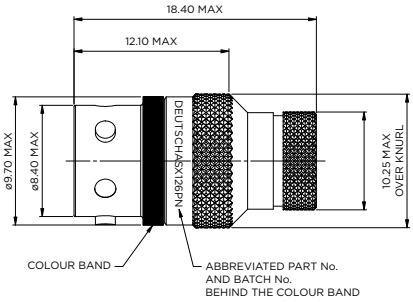

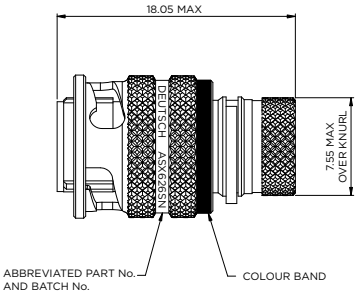

All dimensions are in mm unless otherwise stated.

AS Micro Xtra^{LITE} HE 6 Way Connectors

GENERAL SPECIFICATION

No. of Ways	Contact Size	Shell Size	Max. Current (Amps)	Durability (Cycles of Engagement & Disengagement)	Dielectric Withstanding Voltage (VAC)**	No. of Keyway Orientations	Wire Sealing (mm)		Temperature (˚C)*	
							Min.	Max.	Min.	Max.
6	24	02	3	500	1000	6	0.56	1.02	-55	+170

* The upper limit is the maximum internal hot-spot temperature resulting from the combination of the ambient temperature and heating due to current.
** Current leakage less than 2 milliAmps at (VAC)

CONTACTS & TOOLING PART NUMBERS

Contact Size	Socket	Pin	PCB Socket	PCB Pin	Filler Plug	Ins/Ext Tool	Crimp Tool	Socket Positioner	Pin Positioner
24	605704	605705-31	611292	611661-31	600300-24	605837	M22520/2-01	605840	605839

ORDERING INFORMATION

ASX * 02 — 06 * * -HE **

Range Ref:

Style:
0 = 2 Hole Flange Receptacle
1 = Inline Receptacle
2 = 2 Hole Flange Receptacle with PCB Contacts
6 = Free Plug

Shell Size:

Contact Arrangement:
06

Insert Type:
P = Pin
S = Socket

Shell Keyways:
N = Red (Standard)
A = Yellow
B = Blue
C = Orange
D = Green
E = Grey
U = Violet
(U = Universal for Test Harnesses-
Plug Type 6 only)

HE: Harsh Environment

Modification Code:

ACCESSORIES PART NUMBERS

Part Number	
Nut Plate	Gasket
ATM396-2	GV-2

	Boot Information	
	Straight	90 Degree
Raychem	203W301-25-G02	223W601
Hellermann	1037-4-G	1182-4-G

Pro Cap	
Receptacle	Plug
611636	611637

AS Ultra^{LITE} HE & AS Micro Ultra^{LITE} HE (ASU) Series Connectors

Unique DEUTSCH designed product

- Smaller alternative to ASL range
- Cable accommodation 24-30 AWG (5 way), 22-28 AWG (3 way)
- 17% smaller coupling ring than ASL
- 30% lighter than ASL (mated pair)

2 different contact options

- 5x AWG24 contacts
- 3x AWG22 contacts

Built to withstand harsh environments

- Conductive black zinc finish
- Interfacial wire sealing
- Bonded and sealed insert to prevent moisture ingress

PLUG – TYPE 6

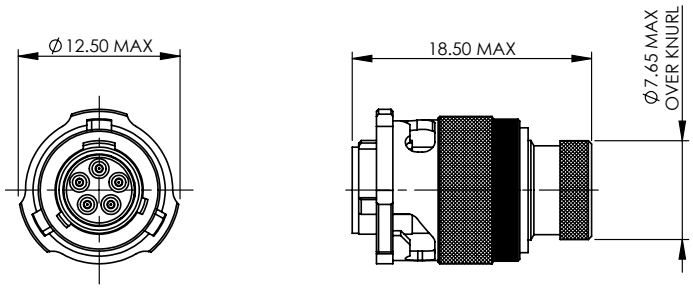

INLINE RECEPTACLE - TYPE 1

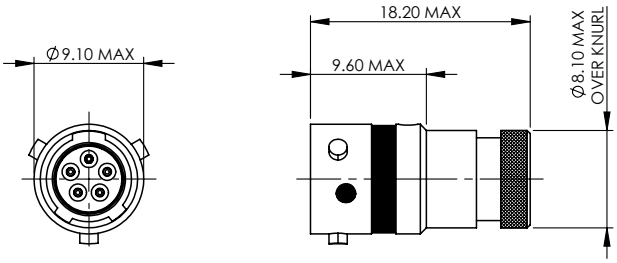

RECEPTACLE - TYPE 0

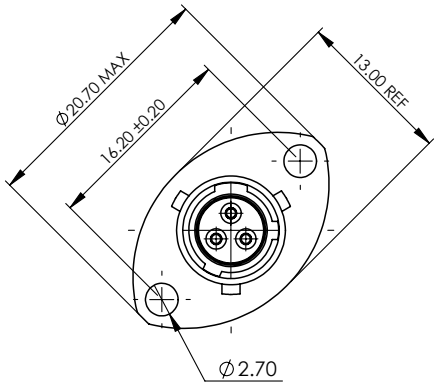

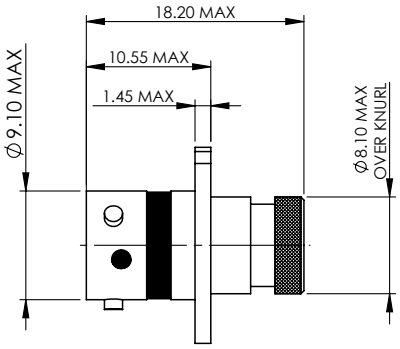

PANEL CUT-OUT DETAIL

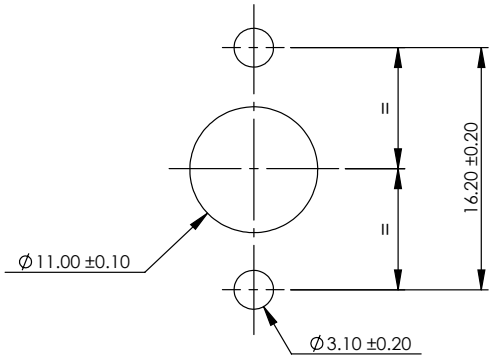

All dimensions are in mm unless otherwise stated.

AS UltraLITE HE & AS Micro UltraLITE HE (ASU) Series Connectors

GENERAL SPECIFICATION

No. of Ways	Contact Size	Shell Size	Max. Current (Amps)	Durability (Cycles of Engagement & Disengagement)	Dielectric Withstanding Voltage (VAC)**	No. of Keyway Orientations	Wire Sealing (mm)		Temperature (˚C)*	
							Min.	Max.	Min.	Max.
3	22	03	5	500	1500	6	0.76	1.37	-55	+170
5	24	03	3		1000		0.56	1.02		

* The upper limit is the maximum internal hot-spot temperature resulting from the combination of the ambient temperature and heating due to current.

** Current leakage less than 2 milliAmps at (VAC)

CONTACTS & TOOLING PART NUMBERS

Contact Size	Socket	Pin	PCB Socket	PCB Pin	Filler Plug	Ins/Ext Tool	Crimp Tool	Socket Positioner	Pin Positioner
22	604984	604946-31	605681	605679-31	600300-22	M81969/14-01	M22520/2-01	605464	605463
24	605704	605705-31	605902	605900-31	600300-24	605837		605840	605839

ORDERING INFORMATION

ASU * 03 – ** * * -HE *

Range Ref:

Style:
0 = 2 Hole Flange Receptacle
1 = Inline Receptacle
2 = 2 Hole Flange Receptacle with PCB Contacts
6 = Free Plug

Shell Size:

Contact Arrangement:
03, 05

Insert Type:
P = Pin
S = Socket

Shell Keyways:
N = Red (Standard)
A = Yellow
B = Blue
C = Orange
D = Green
E = Grey
U = Violet
(U = Universal for Test Harnesses-
Plug Type 6 only)

HE: Harsh Environment

Modification Code:

ACCESSORIES PART NUMBERS

Pro Cap		Nut Plate	Gasket
Receptacle	Plug		
605684	605687	ATM396-4	GV-3

	Boot Information	
	Straight	90 Degree
Raychem	204W221-25-G03	224W221-25-G03
Hellermann	1037-4-G	1182-4-G

AS MicroLITE HE (ASL) Series Connectors

Compact design (size 06 shell)

- Designed for sensor applications
- 5 contacts Size #23
- PCB option

Easy installation

- Positive locking coupling mechanism
- Suitable for blind mating
- Scoop proof interface
- Boot termination feature

Built to withstand harsh environments

- Conductive black zinc finish
- Interfacial wire sealing
- Bonded and sealed insert to prevent moisture ingress

PLUG – TYPE 6

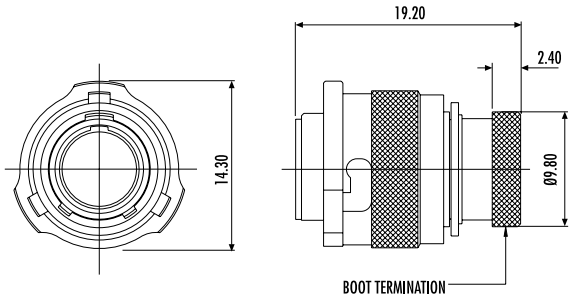

INLINE RECEPTACLE – TYPE 1

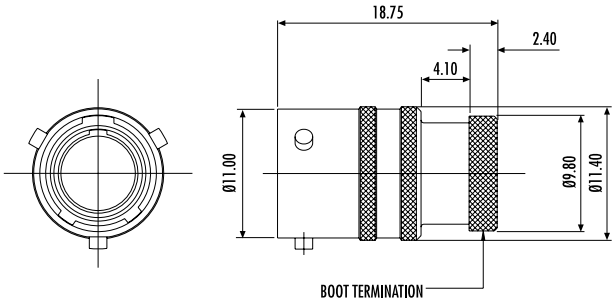

RECEPTACLE – TYPE 0

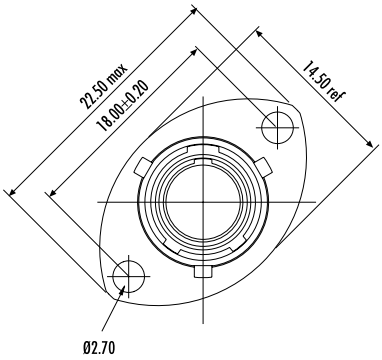

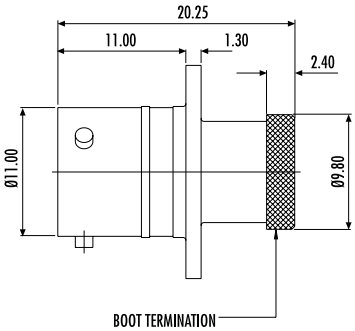

PANEL CUT-OUT DETAIL

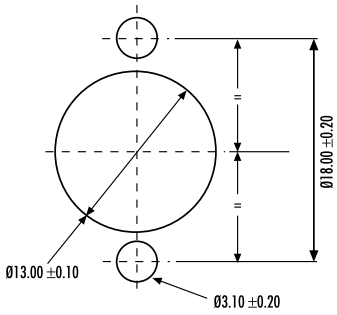

All dimensions are in mm unless otherwise stated.

AS Micro^{LITE} HE (ASL) Series Connectors

GENERAL SPECIFICATION

No. of Ways	Contact Size	Shell Size	Max. Current (Amps)	Durability (Cycles of Engagement & Disengagement)	Dielectric Withstanding Voltage (VAC)**	No. of Keyway Orientations	Wire Sealing (mm)		Temperature (˚C)*	
							Min.	Max.	Min.	Max.
5	23	06	3	500	1000	6	0.60	1.37	-55	+170

* The upper limit is the maximum internal hot-spot temperature resulting from the combination of the ambient temperature and heating due to current.

** Current leakage less than 2 milliAmps at (VAC)

CONTACTS & TOOLING PART NUMBERS

Contact Size	Socket	Pin	PCB Socket	PCB Pin	Filler Plug	Ins/Ext Tool	Crimp Tool	Socket Positioner	Pin Positioner
23	604935	604927-31	604992-HE	604990-31	600300-22	M81969/14-01	M22520/2-01	604973	604972

ORDERING INFORMATION

ASL * 06 — 05 * * — HE — *

Range Ref:

Style:
0 = 2-Hole Flange Receptacle
1 = Inline Receptacle
2 = 2-Hole Flange Receptacle with PCB Contacts
6 = Free Plug

Shell Size:

Contact Arrangement:

Insert Type:
P = Pin
S = Socket

Shell Keyways:
N = Red (Standard)
A = Yellow
B = Blue
C = Orange
D = Green
E = Grey
U = Violet
(U = Universal for Test Harnesses-
Plug Type 6 only)

Harsh Environment:

Modification Code:

ACCESSORIES PART NUMBERS

Pro Cap		Nut Plate	Gasket
Receptacle	Plug		
604029	604027	ATM396-6	GV-6

	Boot Information	
	Straight	90 Degree
Raychem	204W221	224W221
Hellermann	1030-4-G	1181-4-G

AS Rally Micro (ASR) Series Connectors

Compact design (size 06 shell)

- Specialised coupling ring for poor grip locations
- 5 contacts Size #23

Easy installation

- Positive locking coupling mechanism
- Suitable for blind mating
- Scoop proof interface
- Boot termination feature

Built to withstand harsh environments

- Conductive black zinc finish
- Interfacial wire sealing
- Bonded and sealed insert to prevent moisture ingress

PLUG – TYPE 6

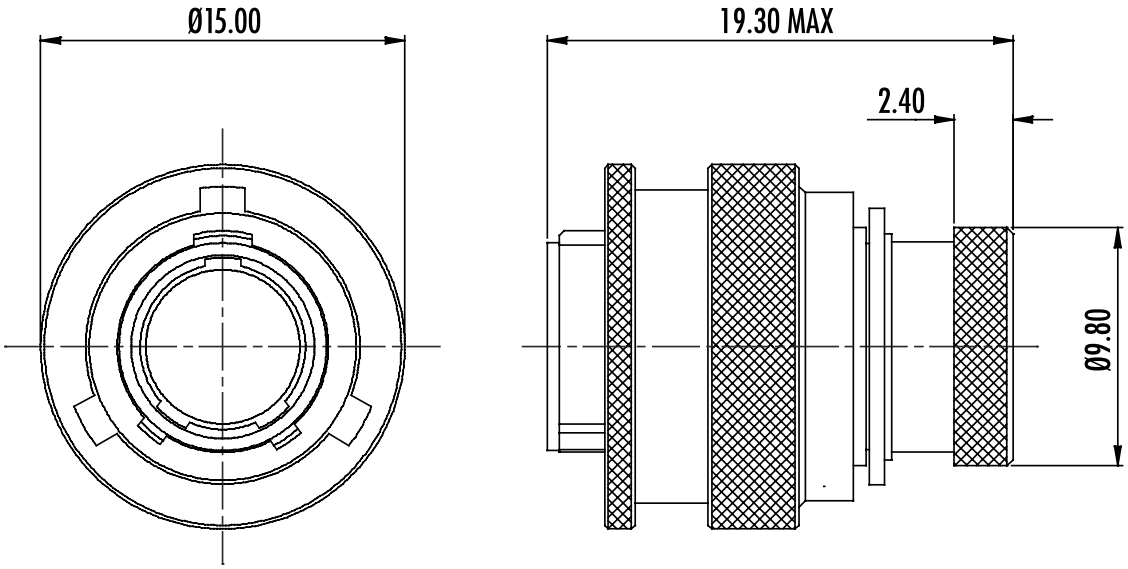

All dimensions are in mm unless otherwise stated.

AS Rally Micro (ASR) Series Connectors

GENERAL SPECIFICATION

No. of Ways	Contact Size	Shell Size	Max. Current (Amps)	Durability (Cycles of Engagement & Disengagement)	Dielectric Withstanding Voltage (VAC)**	No. of Keyway Orientations	Wire Sealing (mm)		Temperature (˚C)*	
							Min.	Max.	Min.	Max.
5	23	06	3	500	1000	6	0.60	1.37	-55	+170

* The upper limit is the maximum internal hot-spot temperature resulting from the combination of the ambient temperature and heating due to current.
** Current leakage less than 2 milliAmps at (VAC)

CONTACTS & TOOLING PART NUMBERS

Contact Size	Socket	Pin	Filler Plug	Ins/Ext Tool	Crimp Tool	Socket Positioner	Pin Positioner
23	604935	604927-31	600300-22	M81969/14-01	M22520/2-01	604973	604972

ORDERING INFORMATION

ASR 6 06 — 05 * * — HE — *

Range Ref:

Style:
6 = Free Plug

Shell Size:

Contact Arrangement:

Insert Type:
P = Pin
S = Socket

Shell Keyways:
N = Red (Standard)
A = Yellow
B = Blue
C = Orange
D = Green
E = Grey
U = Violet
(U = Universal for Test Harnesses - Plug Type 6 only

Harsh Environment:

Modification Code:

ASR = Enhanced Plug, for mating Receptacles see ASL page 16

ACCESSORIES PART NUMBERS

Pro Cap
604027

	Boot Information	
	Straight	90 Degree
Raychem	204W221	224W221
Hellermann	1030-4-G	1181-4-G

AS Composite (ASC) Series Connectors

Extremely resistant to vibration

- Military approved rugged thermoplastic housing

Unique installation options

- Bondable with suitable adhesive in different configurations
- Cable-tie slot for security and mounting inline connections designed to fit Thomas & Betts part no. TY24 or equivalent
- Close stacking possible with locating sides and bottom

MATED PAIR

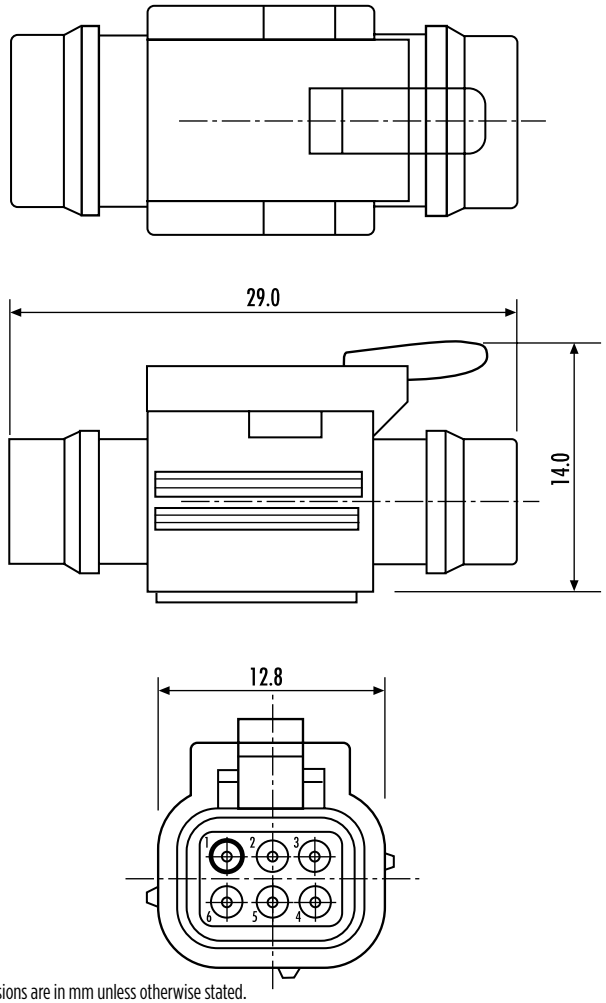

PLUG –TYPE 6

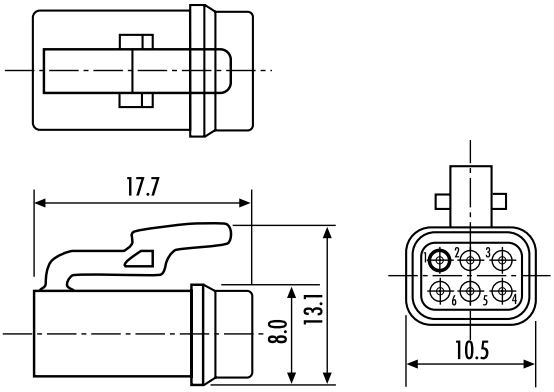

RECEPTACLE – TYPE 1

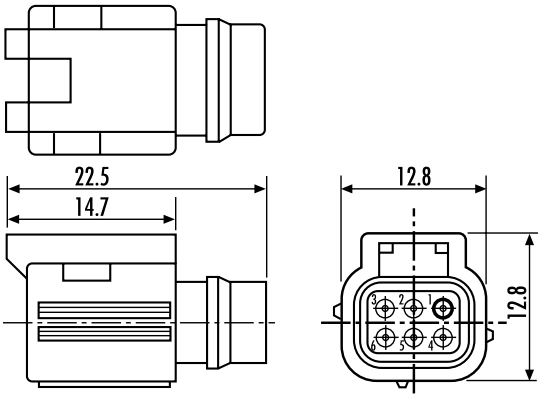

All dimensions are in mm unless otherwise stated.

AS Composite (ASC) Series Connectors

GENERAL SPECIFICATION

No. of Ways	Contact Size	Shell Size	Max. Current (Amps)	Durability (Cycles of Engagement & Disengagement)	Dielectric Withstanding Voltage (VAC)**	No. of Keyway Orientations	Wire Sealing (mm)		Temperature (˚C)*	
							Min.	Max.	Min.	Max.
6	22	06	5	300	1500	6	0.76	1.37	-55	+170

* The upper limit is the maximum internal hot-spot temperature resulting from the combination of the ambient temperature and heating due to current.

** Current leakage less than 2 milliAmps at (VAC)

CONTACTS & TOOLING PART NUMBERS

Socket	Pin	Filler Plug	Ins/Ext Tool	Crimp Tool	Socket Positioner	Pin Positioner
604984	604946-31	600300-22	M81969/14-01	M22520/2-01	605464	605463

ORDERING INFORMATION

ASC * 05 — 06 * * *

Range Ref:

Style:
1 = 1 Inline Receptacle
6 = Free Plug

Shell Size:

Contact Arrangement:

Insert Type:
P = Pin
S = Socket

Shell Keyways:
N = Red (Standard)
A = Yellow
B = Blue
C = Orange
D = Green
E = Grey

Modification Code:

Part Numbers: Receptacle: ASC105-06SN **Plug:** ASC605-06PN

Please note: Plug only available in pin arrangement, Receptacle only available in socket arrangement.

ACCESSORIES PART NUMBERS

	Boot Information	
	Straight	90 Degree
Raychem	204W221	224W221
Hellermann	1030-4-G	1181-4-G

AS Mini Series Connectors

- Size 07 shell
  Smaller option to Mil size 08
- 2 planform options
  3 or 6 contact options
- Integral screen termination
  Ideal for braided cable installations
- Cable accommodation 20, 22, 24 and 26 AWG
- Offers size 8 insert arrangement in smaller shell

PLUG – TYPE 6

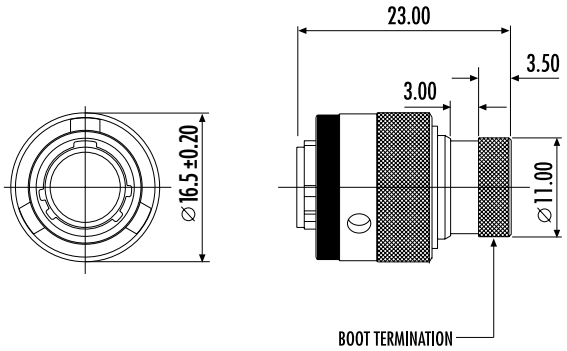

INLINE RECEPTACLE - TYPE 1

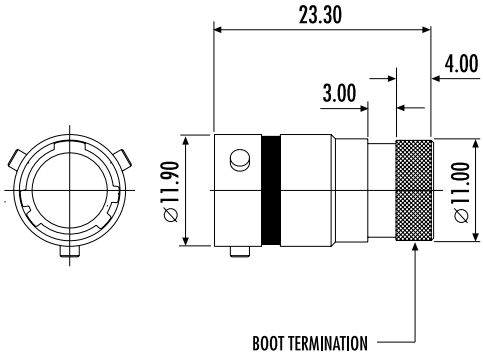

RECEPTACLE - TYPE 0

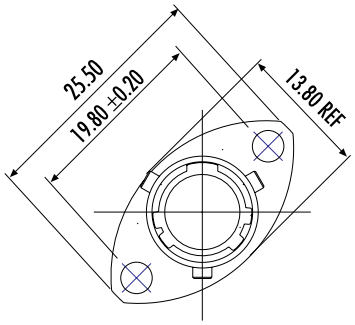

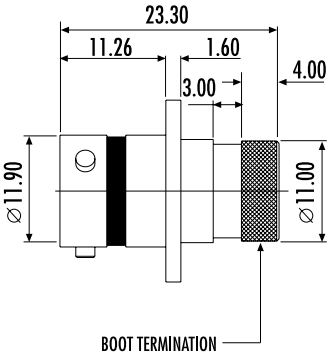

PANEL CUT-OUT DETAIL

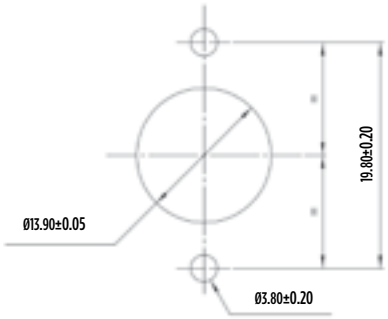

INSERT ARRANGEMENTS

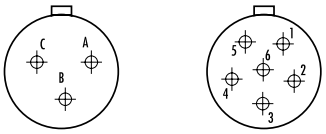

07-98
Size 7 3#20

07-35
Size 7 6#22

All dimensions are in mm unless otherwise stated.

AS Mini Series Connectors

GENERAL SPECIFICATION

No. of Ways	Contact Size	Shell Size	Max. Current (Amps)	Durability (Cycles of Engagement & Disengagement)	Dielectric Withstanding Voltage (VAC)**	No. of Keyway Orientations	Wire Sealing (mm)		Temperature (˚C)*	
							Min.	Max.	Min.	Max.
6	22	07	5	500	1500	3	0.76	1.37	-55	+170
3	20		7.5		1800		1.02	2.11		

* The upper limit is the maximum internal hot-spot temperature resulting from the combination of the ambient temperature and heating due to current.

** Current leakage less than 2 milliAmps at (VAC)

CONTACTS & TOOLING PART NUMBERS

Contact Size	Socket	Pin	Filler Plug	Ins/Ext Tool	Crimp Tool	Socket Positioner	Pin Positioner
22	604887	38941-22	600300-22	M81969/14-01	M22520/2-01	605000	M22520/2-09
20	6862-201-20278	38941-20	600300-20	M81969/14-10		M22520/2-10	M22520/2-10

ORDERING INFORMATION

AS * 07 — ** * * -HE *

Range Ref:

Style:
0 = 2-Hole Receptacle
1 = 1 Inline Receptacle
6 = Free Plug

Shell Size:

Contact Arrangement:
35, 98

Insert Type:
P = Pin
S = Socket

Shell Keyways:
N = Red (Standard)
A = Yellow
B = Blue

HE: Harsh Environment

Modification Code:

ACCESSORIES PART NUMBERS

Pro Cap		Nut Plate	Gasket
Receptacle	Plug		
AS907	AS807	ATM396-7	GV-7

	Boot Information	
	Straight	90 Degree
Raychem	202K121	222K121
Hellermann	152-42-G	1152-4-G

AS Series Connectors

Large application choices

- Filter, hermetic & fiber optic options available
  Shell sizes 08 - 24
- Intermateable with existing LN29729 (Mil-C 38999 Series 1.5) and Pan 6433-2 style connectors
- High density arrangements

Built to withstand harsh environments

- Conductive black zinc finish
- Interfacial wire sealing
- Bonded and sealed insert to prevent moisture ingress

GENERAL SPECIFICATION

Contact Size	Shell Size	Max. Current (Amps)	Durability (Cycles of Engagement & Disengagement)	No. of Keyway Orientations	Wire Sealing (mm)		Temperature (˚C)*	
					Min.	Max.	Min.	Max.
22	08 to 24 see below	5	500	5 only 3 for shell size 8	0.76	1.37	-55	+175
20		7.5			1.02	2.11		
16		20			1.65	2.77		

*The upper limit is the maximum internal hot-spot temperature resulting from the combination of the ambient temperature and heating due to current.

Shell Size	Contact Arrangement	Number of Contacts			Rating **
		Size 22 D	Size 20	Size 16	
08	-98		3		I
08	-35	6			M
10	-98		6		I
10	-35	13			M
10	-02			2	I
10	-03			3	I
12	-04			4	I
12	-98		10		I
12	-35	22			M
14	-97		8	4	I
14	-19		19		I
14	-35	37			M
16	-08			8	I
16	-26		26		I
16	-35	55			M

Shell Size	Contact Arrangement	Number of Contacts			Rating **
		Size 22 D	Size 20	Size 16	
18	-32		32		I
18	-35	66			M
20	-16			16	I
20	-39		37	2	I
20	-41		41		I
20	-35	79			M
22	-21			21	I
22	-55		55		I
22	-35	100			M
24	-29			29	I
24	-61		61		I
24	-35	128			M

**Ratings M&I define Dielectric Withstand Voltage ratings as follows:
M = 1300 volts rms, I = 1800 volts rms, current leakage less than 2 milliAmps.

Please note: The contact/insert arrangements shown above are standard layouts. Other combinations of shell sizes and insert arrangements may be available. For details contact the TE Technical Support.

CONTACTS & TOOLING PART NUMBERS

Contact Size	Socket	Pin	Filler Plug	Ins/Ext Tool	Crimp Tool	Socket Positioner	Pin Positioner
22	38943-22	38941-22	600300-22	M81969/14-01	M22520/2-01	M22520/2-07	M22520/2-09
20	38943-20	38941-20	600300-20	M81969/14-10	M22520/2-01	M22520/2-10	M22520/2-10
16	38943-16	38941-16	600300-16	M81969/14-03	M22520/1-01	M22520/1-04	M22520/1-04

Please note: PCB versions are ordered with AS2 prefixes and come with contacts.

AS Series Connectors

AS CONTACT / INSERT ARRANGEMENTS

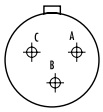

08-98 (I)
Size 8
3#20

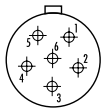

08-35 (M)
Size 8
6#22

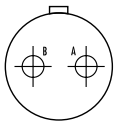

10-02 (I)
Size 10
2#16

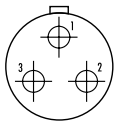

10-03 (I)
Size 10
3#16

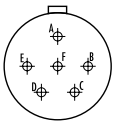

10-98 (I)
Size 10
6#20

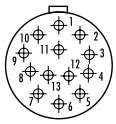

10-35 (M)
Size 10
13#22

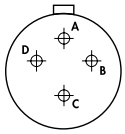

12-04 (I)
Size 12
4#16

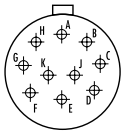

12-98 (I)
Size 12
10#20

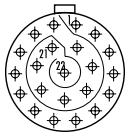

12-35 (M)
Size 12
22#22

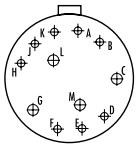

14-97 (I)
Size 14
8#20 4#16

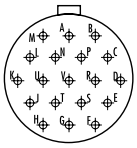

14-19 (I)
Size 14
19#20

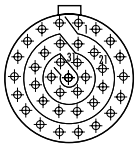

14-35 (M)
Size 14
37#22

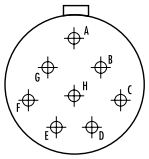

16-08 (I)
Size 16
8#16

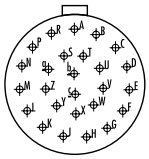

16-26 (I)
Size 16
26#20

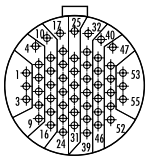

16-35 (M)
Size 16
55#22

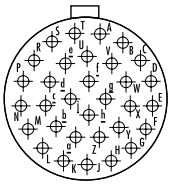

18-32 (I)
Size 18
32#20

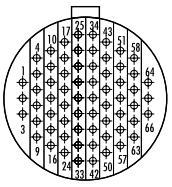

18-35 (M)
Size 18
66#22

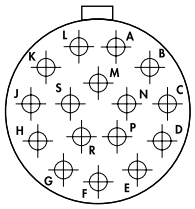

20-16 (I)
Size 20
16#16

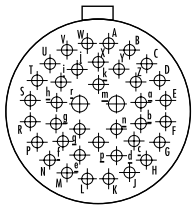

20-39 (I)
Size 20
37#20 2#16

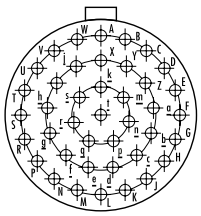

20-41 (I)
Size 20
41#20

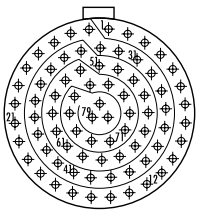

20-35 (M)
Size 20
79#22

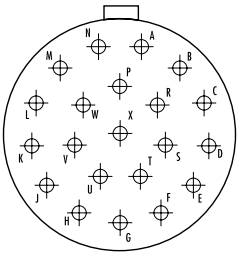

22-21 (I)
Size 22
21#16

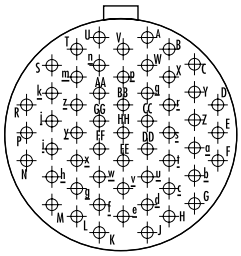

22-55 (I)
Size 22
55#20

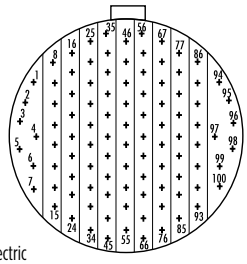

22-35 (M)
Size 22
100#22

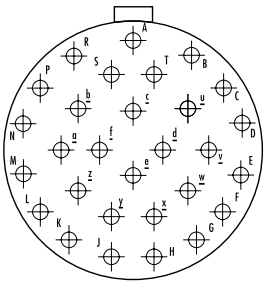

24-29 (I)
Size 24
29#16

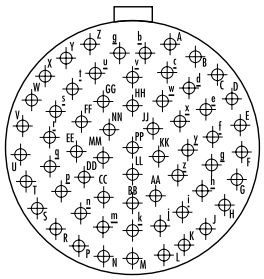

24-61 (I)
Size 24
61#20

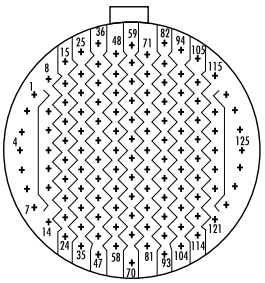

24-35 (M)
Size 24
128#22

Ratings M&I define Dielectric Withstand Voltage ratings as follows: I = 1800 volts rms, M = 1300 volts rms, current leakage less than 2 milliamps.

PLUG – TYPE 6

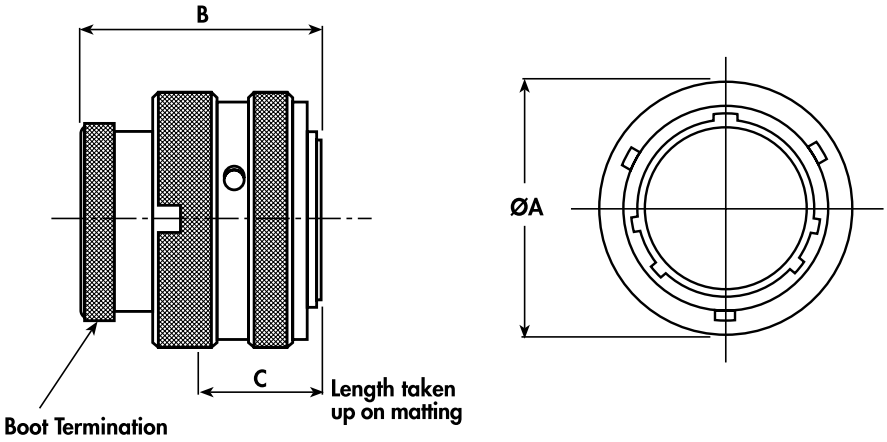

Shell Size	A Max.	B Max.	C Max.
08	17.70	33.50	15.00
10	20.80		
12	25.20		
14	28.40		
16	31.50		
18	34.80		
20	38.20		
22	41.30		
24	44.60		

INLINE RECEPTACLE – TYPE 1

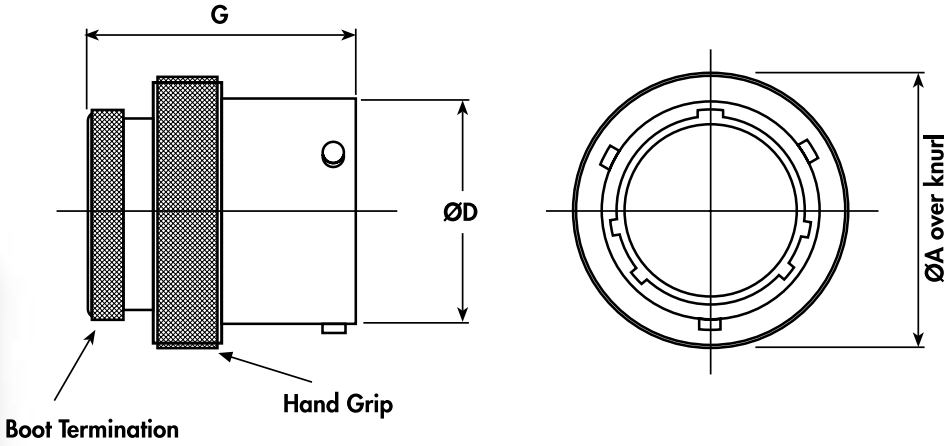

Shell Size	A Max.	D +0 -0.13	G Max.
08	17.70	12.00	33.50
10	20.80	15.00	
12	25.20	19.05	
14	28.40	22.22	
16	31.50	25.40	
18	34.80	28.57	
20	38.20	31.75	
22	41.30	34.92	
24	44.60	38.10	

All dimensions are in mm unless otherwise stated.

RECEPTACLE – TYPE 0

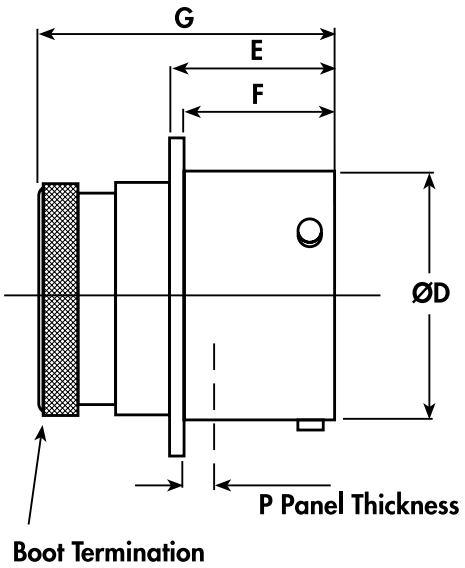

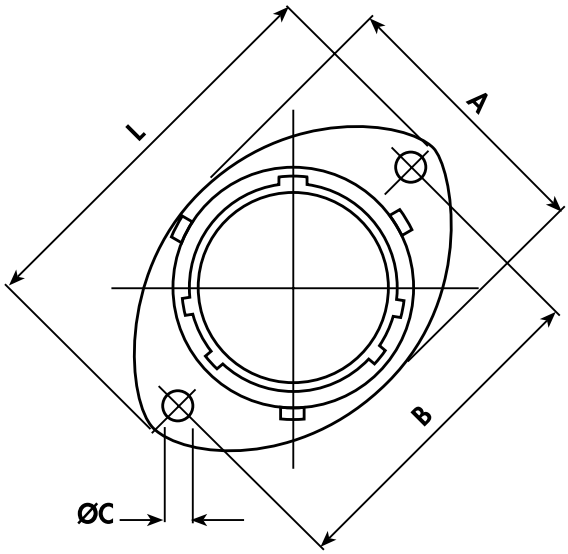

Shell Size	A REF	B ± 0.2	C + 0.1 − 0	D + 0 − 0.13	E + 0.15 − 0	F + 0 − 0.13	G Max.	L Max.	P Max.
08	16.50	21.35	3.20	12.00	17.21	16.05	33.50	27.20	3.00
10	19.50	25.90		15.00				32.00	
12	24.00	29.10		19.05				35.20	
14	27.00	32.50		22.22				38.40	
16	30.30	34.80		25.40				41.00	
18	33.70	38.20		28.57				44.70	
20	37.00	41.60		31.75		15.29		47.90	
22	40.00	44.95		34.92				51.10	
24	43.30	49.35	3.70	38.10				55.80	2.26

PANEL CUT-OUT DETAIL

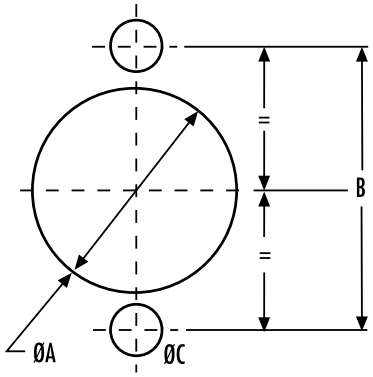

Shell Size	A ±0.10	B ±0.20	C ±0.20
08	14.50	21.40	3.6
10	17.40	25.90	
12	21.90	29.10	
14	25.00	32.50	
16	28.20	34.80	
18	31.40	38.20	
20	34.60	41.60	
22	37.80	44.90	
24	41.00	49.30	4.10

All dimensions are in mm unless otherwise stated.

PCB BOX MOUNTING RECEPTACLE – TYPE 2

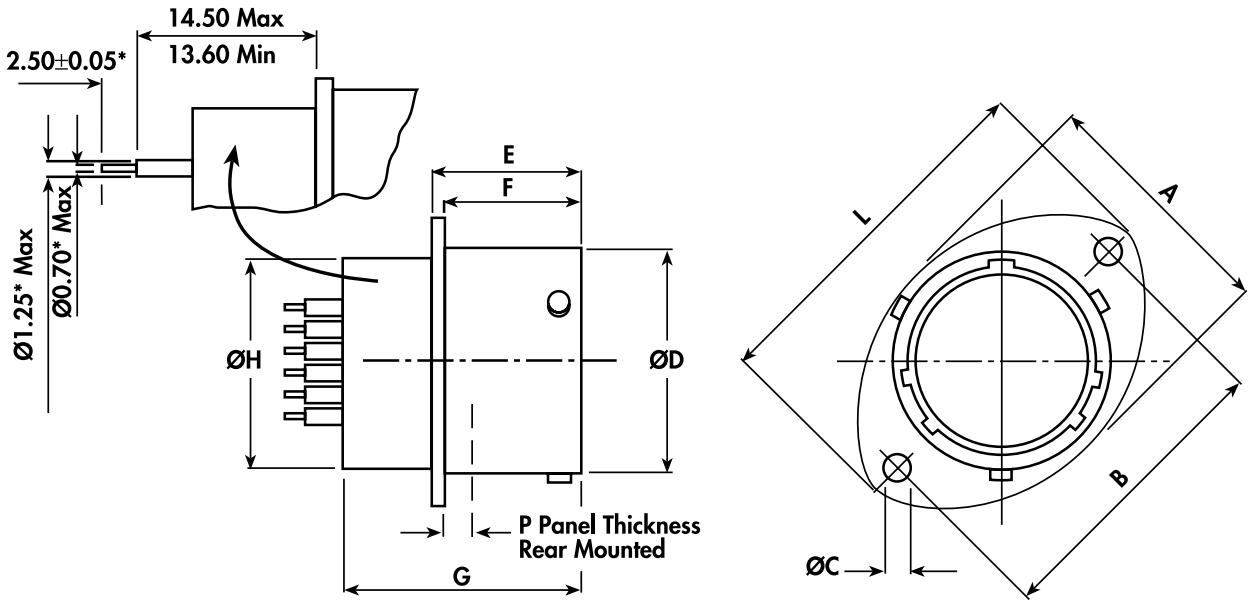

*Dimensions for 20 and 22 contacts shown are for standard parts. Other PCB contacts are available.

Shell Size	A REF	B ± 0.2	C + 0.1 − 0	D + 0 − 0.13	E + 0.15 − 0	F + 0 − 0.13	G Max.	H Max.	L Max.	P Max.
08	16.50	21.40		12.00				11.10	27.20	
10	19.50	25.90		15.00				14.27	32.00	
12	24.00	29.10		19.05				17.44	35.20	
14	27.00	32.50		22.22		16.05		20.60	38.40	
16	30.30	34.80	3.7	25.40	17.21		27.65	23.77	41.00	3.00
18	33.70	38.20		28.57				26.94	44.70	
20	37.00	41.60		31.75				30.11	47.90	
22	40.00	44.95		34.92		15.29		33.29	51.10	
24	43.30	49.35		38.10				36.46	55.80	2.26

All dimensions are in mm unless otherwise stated.

AS Series Connectors (*continued*)

ORDERING INFORMATION

AS * ** – ** * * – ***

Range Ref:

Style:
0 = 2-Hole Flange Receptacle (Front Fixing)
1 = Inline Receptacle
2 = 2-Hole Flange Box Mount PCB Receptacle
(Front Fixing or Rear Fixing)
6 = Free Plug
8 = Cap for Plug
9 = Cap for Receptacle

Shell Size:

Contact Arrangement:

Insert Type:
P = Pin
S = Socket

Shell Keyways:
N = Red (Standard)
A = Yellow
D = Green
B = Blue
C = Orange
U = Violet
(U = Universal for Test Harnesses)

Modification Code:

Please note: The size 8 shell is only available in keyways A, D and N.

ACCESSORIES PART NUMBERS

Shell Size	Nut Plate	Gasket
08	ATM396 -8	GV-08
10	ATM396 -10	GV-10
12	ATM396 -12	GV-12
14	ATM396 -14	GV-14
16	ATM396 -16	GV-16
18	ATM396 -18	GV-18
20	ATM396 -20	GV-20
22	ATM396 -22	GV-22
24	ATM396 -24	GV-24

BOOT TERMINATION DETAIL

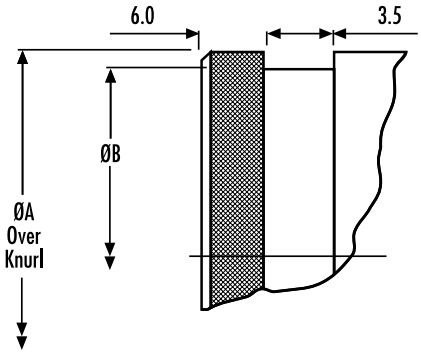

Shell Size	A ± 0.10	B ± 0.05
08	11.20	10.00
10	14.22	12.95
12	17.39	16.15
14	20.55	19.15
16	23.72	23.35
18	26.89	25.35
20	30.06	28.50
22	33.24	31.70
24	36.41	34.85

All dimensions are in mm unless otherwise stated.

AS Double Density (ASDD) Series Connectors

Next generation connector – high density and high performance 8 shell sizes

- Allows for a saving of 2 shell sizes relative to standard autosport planforms
- Very lightweight
- Almost double the number of contacts compared with the standard autosport range equivalent shell size
- Integral screen

Built to withstand harsh environments

- Conductive black zinc finish
- Interfacial wire sealing
- Bonded and sealed insert to help prevent moisture ingress

9-WAY CONNECTOR DIMENSIONS - For other dimensions, refer to pages 26 to 29

PLUG – TYPE 6

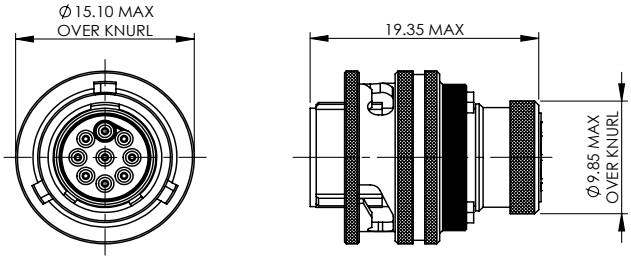

INLINE RECEPTACLE - TYPE 1

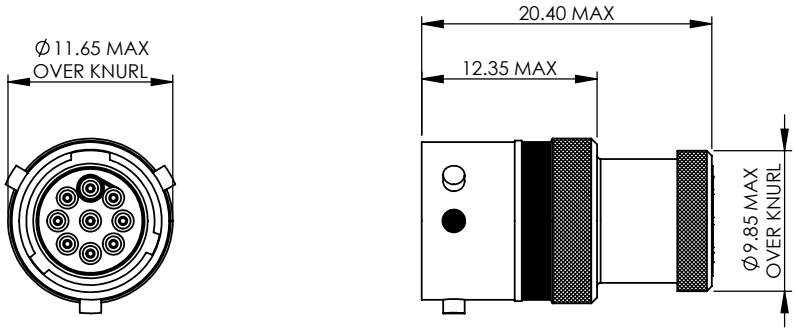

RECEPTACLE - TYPE 0

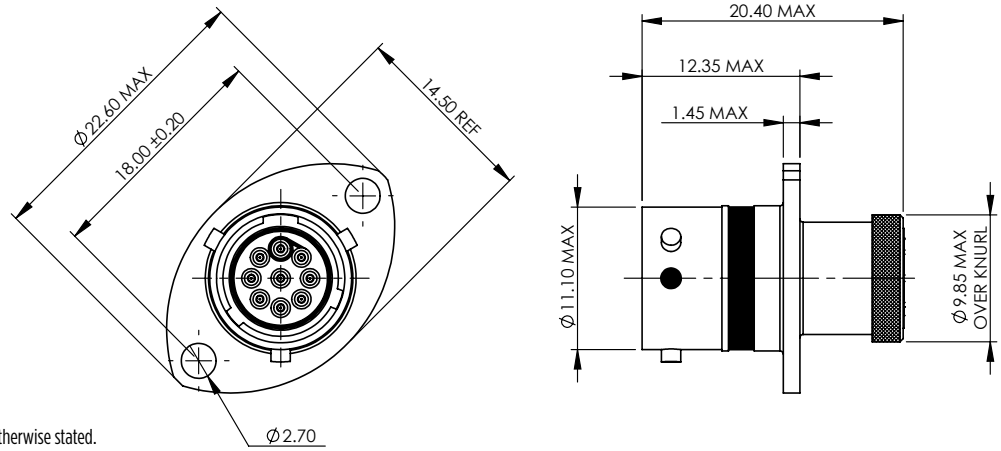

All dimensions are in mm unless otherwise stated.

AS Double Density (ASDD) Series Connectors

GENERAL SPECIFICATION

Connector	Contact Size	Shell Size	Max. Current (Amps)	Durability (Cycles of Engagement & Disengagement)	Dielectric Withstanding Voltage (VAC)**	No. of Keyway Orientations	Wire Sealing (mm)		Temperature (°C)*	
							Min.	Max.	Min.	Max.
06-09	24	06	3	500	750	6	0.56	1.02	-55	+170
07-11		07				3				
08-11		08				3				
10-23		10				6				
12-41		12								
14-64		14								
16-93		16								
18-118		18								

* The upper limit is the maximum internal hot-spot temperature resulting from the combination of the ambient temperature and heating due to current.
** Current leakage less than 2 milliAmps at (VAC)

CONTACTS & TOOLING PART NUMBERS

Connector	Socket	Pin	PCB Socket	PCB Pin	Ins/Ext Tool	Socket Positioner	Pin Positioner
06-09	605704	605705-31	610008	610006-31	605837	605840	605839
07-11	612532	605719-31	612715-ZZ	612714-31		M22520/2-09	605839
08-11	605721	605719-31	PCB versions are ordered with AS2 prefixes and come with contacts.			610287	610286
10-23							
12-41							
14-64							
16-93							
18-118							

ORDERING INFORMATION

ASDD * ** – ** * * – ***

Range Ref.:

Style:
0 = 2-Hole Flange Receptacle
1 = Inline Receptacle
2 = 2-Hole Flange Receptacle with PCB Contacts
4 = Flangeless
6 = Free Plug

Shell Size:
06, 07, 08, 10, 12, 14, 16, 18

Contact Arrangement:
09, 11, 23, 41, 64, 93, 118

Insert Type:
P = Pin
S = Socket

Shell Keyways:
N = Red (Standard)
A = Yellow
D = Green
B = Blue
C = Orange
E = Grey
U = Violet

Modification Code:

Please note: 08-11 is only available in keyways N, A and D, and 06-09 is available in all keyways. 07-11 is only available in keyways N, A and B.

ACCESSORIES PART NUMBERS

For information on boots and nut plates please refer to AS series on pages 24 to 29 or contact TE Technical Support for further information.

AS Micro HE Hermetic Series Connectors

Hermetic weld mount connector intermateable with AS Micro and ASL connectors

- Filtered Hermetic option also available

High performance materials

- Stainless Steel (316) for ease of mounting and corrosion performance
- Titanium versions for light weight applications also available
- Glass seal can withstand pressure differentials of 1000 psi without loss of electrical performance or fluid leakage

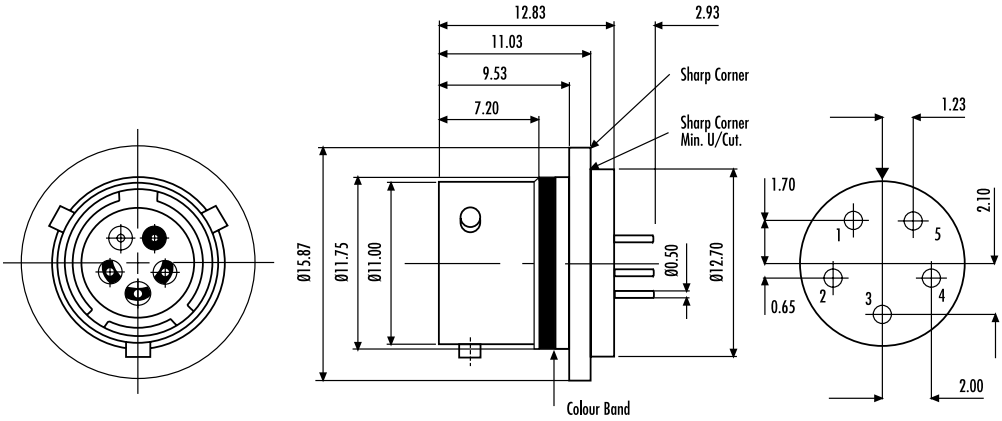

GENERAL SPECIFICATION

Contact Size	Shell Size	Max. Current (Amps)	Durability (Cycles of Engagement & Disengagement)	Dielectric Withstanding Voltage (VAC)**	No. of Keyway Orientations	Temp (°C)*		Materials		Finish	
						Min.	Max.	Shell	Contacts	Shell	Contacts
23	06	3	500	1000	5	-65	+200	Stainless Steel (316)***	Nickel Iron	Electro-polished	Gold Plated

* The upper limit is the maximum internal hot-spot temperature resulting from the combination of the ambient temperature and heating due to current.
** Current leakage less than 2 milliamps at (VAC)
*** Titanium Shell also available

ORDERING INFORMATION

AS Micro HE Hermetic Receptacle: **AS 4H 06 — 05 P N — HE**

AS Micro HE Plug: **ASL 606 05S * — HE**

Shell Orientation:
N = Red (Standard)

All dimensions are in mm unless otherwise stated.

AS Micro Hermetic (Jam-Nut) Series Connectors

Unique product for sensor and fuel cell use

- Jam-nut fixing
- Enlarged backshell for easier contact soldering
- Fuel immersible specification O-ring for enhanced fluid resistance

High performance materials

- Glass seal can withstand pressure differentials of 1000 psi without loss of electrical performance or fluid leakage

Fully intermateable with AS Micro HE connector and Micro^{LITE} connector

FRONT FACE

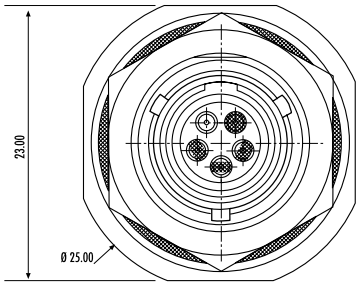

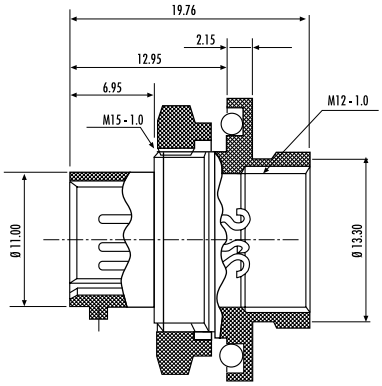

REAR FACE

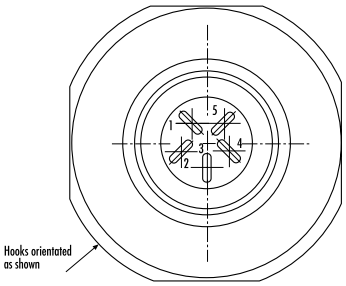

PANEL CUT-OUT DETAIL

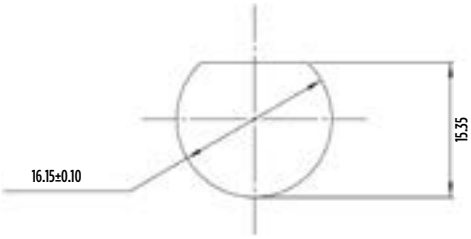

GENERAL SPECIFICATION

Contact Size	Shell Size	Max. Current (Amps)	Durability (Cycles of Engagement & Disengagement)	Dielectric Withstanding Voltage (VAC)**	No. of Keyway Orientations	Temperature (˚C)*	
						Min.	Max.
23	06	3	500	1000	1	-65	+200

* The upper limit is the maximum internal hot-spot temperature resulting from the combination of the ambient temperature and heating due to current.

** Current leakage less than 2 milliAmps at (VAC)

ORDERING INFORMATION

Part No. AS7H06 - 05 PN-HE

All dimensions are in mm unless otherwise stated.

AS Hermetic Fuel Tank Series Connectors

Range of connectors designed for fuel cell walls

Selection of contact arrangements to accommodate pumps and sensors

High performance materials

- Fuel immersible specification O-ring for enhanced fluid resistance
- Integral potting cup, rear accessory thread and external boot termination feature
- Glass seal can withstand pressure differentials of 1000 psi without loss of electrical performance or fluid leakage

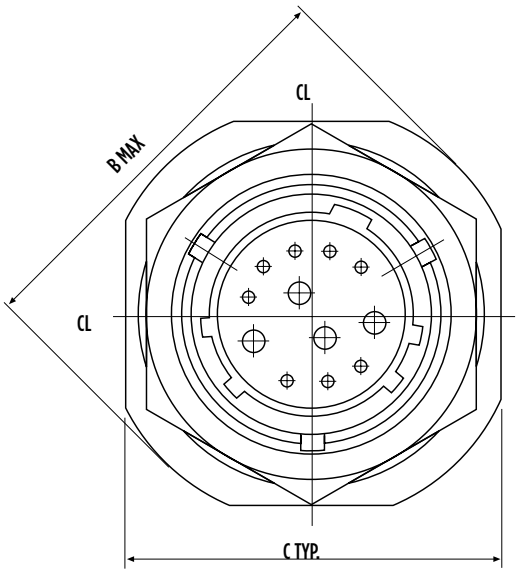

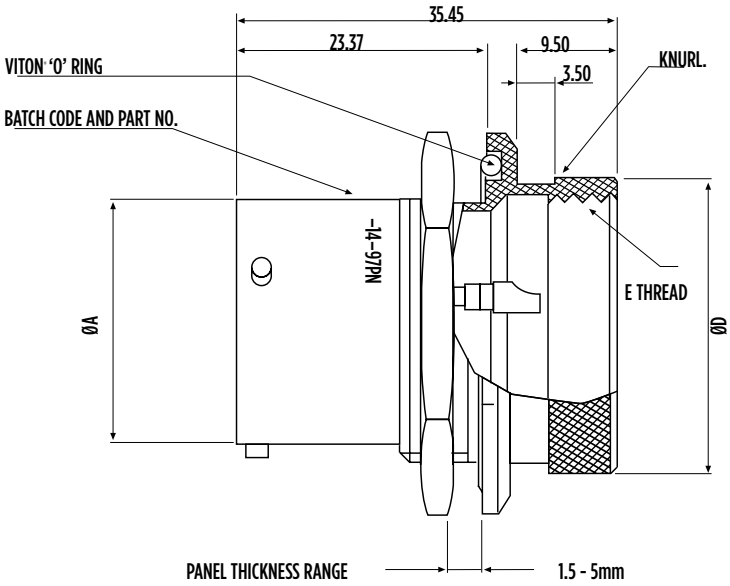

Shell Size	Part No.	ØA Max.	B Max.	C TYP.	ØD TYP.	E THREAD	ØF Min.	G Max.
10	AS07PT-10-**PN	15.04	28.40	25.95	20.50	M18x1.0	17.70	17.00
12	AS07PT-12-**PN	19.09	33.00	30.75	23.67	M21x1.0	22.70	21.10
14	AS07PT-14-**PN	22.26	36.30	33.85	26.84	M24x1.0	25.70	24.30

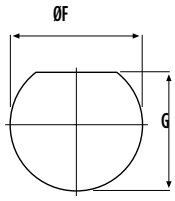

RECOMMENDED MOUNTING HOLE

All dimensions are in mm unless otherwise stated.

AS Hermetic Fuel Tank Series Connectors

GENERAL SPECIFICATION

Contact Size	Max. Current (Amps)	Sealing	Pressure	Electrical	Materials		Finish	
					Shell	Contacts	Shell	Contacts
22	5	1×10^{-8} cc/sec @ 15 PSI	1,000 psi typ.	IR 5000 Mohms @ 500 volt DC	Stainless Steel (303)	Nickel Iron	Electro-polished	Gold Plated
20	7.5							
16	20							

ORDERING INFORMATION

AS07PT — * — * P N

Basic P/N

Planform
10-35
10-98
12-04
12-35
12-98
14-97

Pin Interface

Shell Orientation

Mating Free Plug (see page 22 - 23)

Part Nos:

AS610-35SN
AS610-98SN
AS612-04SN
AS612-98SN
AS612-35SN
AS614-97SN

For aluminum version, please contact our TE Technical Support on +44 (0) 1424 852722 or email autosport@te.com

ACCESSORIES PART NUMBERS

O-Ring Table

Part Number	inch	mm	Connector
429320-17	0.676	17.17	Size 6
429320-18	0.739	18.77	Size 10
429320-21	0.926	23.52	Size 12
429320-23	1.051	26.70	Size 14

AS Micro[LITE] HE Fuel Immersible Series Connectors

For in-tank connection applications

- Unique DEUTSCH designed fuel resistant elastomer insert
- Hermetic option with enlarged backshell for easy contact soldering and integrated potting cup available
- Cable accommodation 22, 24, 26 and 28 AWG
- Fully intermateable with AS Micro HE and AS Micro[LITE] connectors

PLUG – TYPE 6

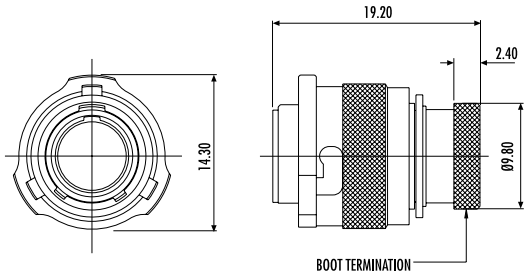

INLINE RECEPTACLE - TYPE 1

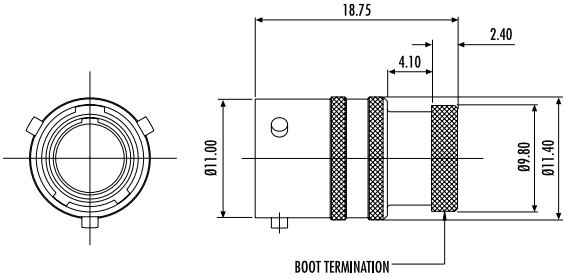

RECEPTACLE – TYPE 0

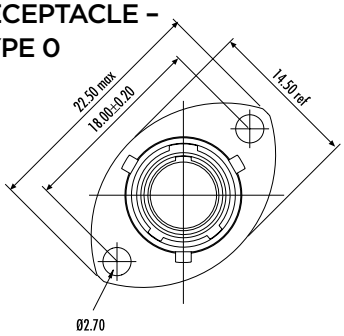

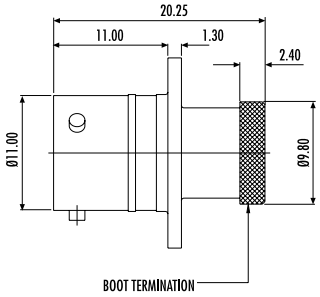

PANEL CUT-OUT DETAIL

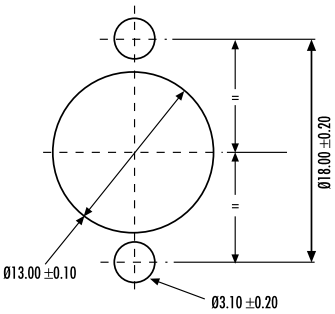

HERMETIC RECEPTACLE

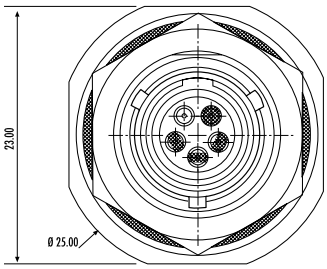

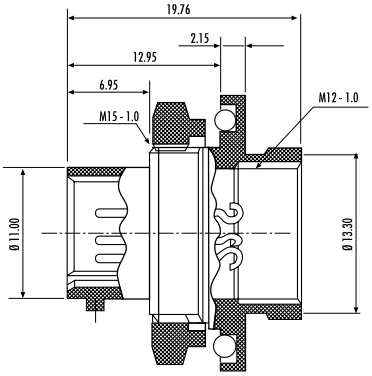

PANEL CUT-OUT DETAIL

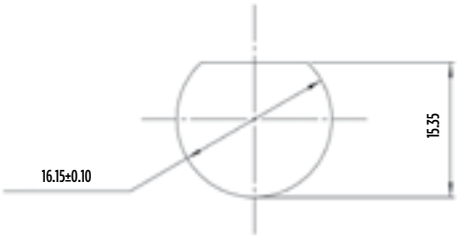

All dimensions are in mm unless otherwise stated.

AS Micro^{LITE} HE Fuel Immersible Series Connectors

GENERAL SPECIFICATION

Contact Size	Shell Size	Max. Current (Amps)	Durability (Cycles of Engagement & Disengagement)	Dielectric Withstanding Voltage (VAC)**	No. of Keyway Orientations	Wire Sealing (mm)		Temperature (˚C)*	
						Min.	Max.	Min.	Max.
23	06	3	500	1000	6	0.60	1.37	-55	+170

* The upper limit is the maximum internal hot-spot temperature resulting from the combination of the ambient temperature and heating due to current.

** Current leakage less than 2 milliAmps at (VAC)

For other sizes and arrangements, please call our TE Technical Support on **+44 (0) 1424 852722** or email **autosport@te.com**

CONTACTS & TOOLING PART NUMBERS

Socket	Pin	Filler Plug	Ins/Ext Tool	Crimp Tool	Socket Positioner	Pin Positioner
604935	604927-31	600300-22	M81969/14-01	M22520/2-01	604973	604972

ORDERING INFORMATION

ASL * 06 — 05 * * — HE — 952K

Range Ref:
ASL (or AS for Hermetic)

Style:
0 = 2-Hole Flanged Receptacle
1 = Inline Receptacle
7H = Hermetic Receptacle
6 = Free Plug

Shell Size:

Contact Arrangement:

Insert Type:
(AS7H Pin Insert only)
P = Pin
S = Socket

Shell Keyways:
(AS7H N only)
N
A
B

Harsh Environment:

Modification Code:

ACCESSORIES PART NUMBERS

Pro Cap		Nut Plate	Gasket
Receptacle	Plug		
604029	604027	ATM396-6	GV-6

	Boot Information	
	Straight	90 Degree
Raychem	202A111	222A111
Hellermann	113-4-G	1108-4-G

AS Heavy Duty (ASHD) Series Connectors

Autosport design for high current motorsport applications

- Early break / late mate on data contacts for safety
- Cable accommodation from 16mm² - 70mm²
- Positive locking coupling mechanism

High performance materials

- Environmentally sealed
- Thermal cycle tested
- Heavy duty rated
- Crimp type solid and gold plated copper contacts

For parts dimensions, refer to pages 26 to 29

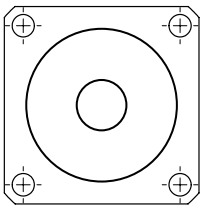

SuperASHD Single
70mm² contact

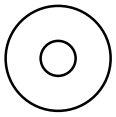

ASHD14-1
(1 x AWG 4)

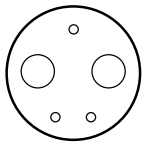

AS 22-24320
(2 x AWG 4 , 3 x AWG 20)

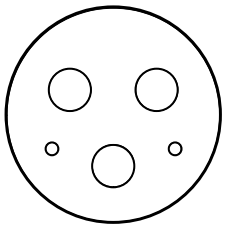

AS 24-34220
(3 x AWG 4 , 2 x AWG 20)

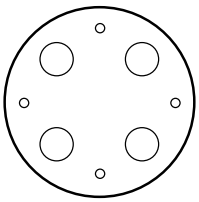

AS 24-44420
(4 x AWG 4 , 4 x AWG 20)

All dimensions are in mm unless otherwise stated.

AS Heavy Duty (ASHD) Series Connectors

CONTACTS & TOOLING PART NUMBERS

Contact Size	Socket	Pin	Filler Plug	Ins/Ext Tool	Crimp Tool	Socket Positioner	Pin Positioner
20	38943-20	38941-20	600300-20	M81969/14-10	M22520/2-01	M22520/2-10	M22520/2-10

Please note: PCB versions are ordered with AS2 prefixes and come with contacts.

Wire Size	Split-Finger Socket	Hyperboloid Socket	Pin	Ext Tool	Crimp Tool	Jaws
16mm	611103-016	605739	605734	610136-Tool	605773	605774
25mm	611103-025	605654	605660			605775
35mm	611103-035	605740	605735			605776

Contact	Max. Current
20	7.5
4	200
0 **	300

*For use with part numbers **ASHD022-24320SN-S04** and **ASHD622-24320PN-004** **** Super ASHD only**

Application Note: Due to potential high current, we would recommend that the product be suitably insulated with the appropriate materials.

ORDERING INFORMATION

ASHD * * – * * * – * – ****

Range Ref.:

Style:
0
1
2 (ASHD Size 14 only)
6

Shell Size:
14 = ASHD
22 = ASHD 2-Way and SuperASHD
24 = ASHD 3 and 4-Way

Contact Arrangement:
1 = (ASHD)
24320 = (Size 22)
34220 = (Size 24) 3-Way
44420 = (Size 24) 4-Way
1 = (Super ASHD)

Insert Type:
P = Pin
S = Socket

Shell Keyways:
N = Red (Standard)
A = Yellow
B = Blue
C = Orange
D =Green
E = Grey

Harsh Environment:
Contact Size Code
*16
*25
*35

*With pin contacts, C for size 14 shell only / O for other sizes. With socket contacts, C for hyperboloid contacts for size 14 shell only / O for hyperloid contacts for other sizes / S for split finger contacts.

Modification Code:

AS Co-ax Series Connectors

Autosport designed co-axial cable solution

- Ultra compact and light weight design (size 3 shell)
- Single co-axial contact and gold-plated crimp contacts
- Positive locking coupling mechanism with 2 keyway orientations and boot termination feature
- Designed for RG316 cable

GENERAL SPECIFICATION

Contact Size	Shell Size	Max. Current (Amps)	Durability (Cycles of Engagement & Disengagement)	Dielectric Withstanding Voltage (VAC)**	No. of Keyway Orientations	Wire Sealing (mm)		Temperature (˚C)*	
						Min.	Max.	Min.	Max.
-	03	-	500	1000	2	-	-	-55	+175

* The upper limit is the maximum internal hot-spot temperature resulting from the combination of the ambient temperature and heating due to current.
** Current leakage less than 2 milliAmps at (VAC)

All dimensions are in mm unless otherwise stated.

CONTACTS & TOOLING PART NUMBERS

Contacts Part Numbers	
Pin	Socket
610908	610872

Connector Type	Part Number
Plug	ASCX603-1SN-050
Inline - receptacle	ASCX103-1PN-050
Flanged - receptacle	ASCX003-1PN-050

AS Co-ax Series Connectors

Portable antenna

- Ultra compact and light weight design (size 3 shell)
- Single co-axial contact
- Conductive black zinc finish
- Can be cut to length for optimised frequency (supplied with cut chart)
- Designed for RG316 and RG178 cables

GENERAL SPECIFICATION

Contact Size	Shell Size	Max. Current (Amps)	Durability (Cycles of Engagement & Disengagement)	Dielectric Withstanding Voltage (VAC)**	No. of Keyway Orientations	Wire Sealing (mm)		Temperature (˚C)*	
						Min.	Max.	Min.	Max.
-	03	-	-	-	2	-	-	-55	+175

*The upper limit is the maximum internal hot-spot temperature resulting from the combination of the ambient temperature and heating due to current.
**Current leakage less than 2 milliamps at (VAC)

Contact Autosport Technical Support for more details of specific products to meet your sealed electrical connection requirements.

All dimensions are in mm unless otherwise stated.

CONTACTS & TOOLING PART NUMBERS

Connector Type	Part Number
Plug (standard)	ASCX603-1SN-050
Inline - receptacle	ASCX103-1PN-050
Flanged - receptacle	ASCX003-1PN-050
Portable antenna plug	ASCX603-1SN-ANT20

Special Contacts

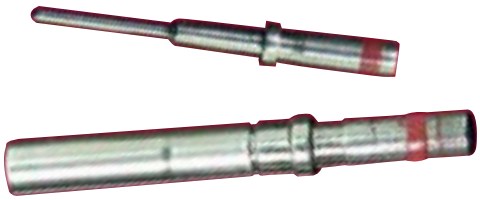

Thermocouple Contacts

- Available in #22 for Autosport Range
- Available in #23 for Micro^{Lite} Series connectors
- Engineered in Chromel and Alumel
- Designed exclusively for DEUTSCH connectors

THERMOCOUPLE #22 FOR AUTOSPORT RANGE

Description	Socket
Chromel pin	605346
Chromel socket	605347
Alumel pin	605348
Alumel socket	605349

THERMOCOUPLE #23 FOR MICRO^{LITE}

Description	Socket
Chromel pin	605378-CR
Chromel socket	605380-CR
Alumel pin	605378-AL
Alumel socket	605380-AL

CUSTOM MADE CONTACTS

In addition to Thermocouple contacts, we are able to engineer special solutions for different wire sizes on our regular contact range.

For more information and ordering details please call our TE Technical Support on **+44 (0) 1424 857088** or email **autosport@te.com**

AS4 Flangeless Option

AS4 FLANGELESS

- Weight-saving alternative to AS1 receptacle
- Available on AS shells 8 – 24
- Added knurl for easier coupling
- Factory modified change to save team's time
  - Available on shell sizes 8 – 24
  - Sample part number: AS410-35PN
  - (AS4 shell type denotes flangeless option)

For more information and ordering details please call our TE Technical Support on **+44 (0) 1424 857088** or email **autosport@te.com**

Clinchnut AS Series Connectors

CLINCHNUT AS SERIES

- A replacement for nutplates
- Available for PCB and flange mounted versions
- Time-saving option
- Available across the range of AS connectors

CLINCHNUT AS SERIES GENERAL SPECIFICATION

Contact Size	Shell Size	Max. Current (Amps)	Durability (Cycles of Engagement & Disengagement)	Dielectric Withstanding Voltage (VAC)**	No. of Keyway Orientations	Wire Sealing (mm)		Temperature (˚C)*	
						Min.	Max.	Min.	Max.
-	-	-	500	-	-	-	-	-55	+175

* The upper limit is the maximum internal hot-spot temperature resulting from the combination of the ambient temperature and heating due to current.

** Current leakage less than 2 milliAmps at (VAC)

Mod Code	978M

For more information and ordering details please call our TE Technical Support on **+44 (0) 1424 857088** or email **autosport@te.com**

Low Profile PCB Connector

LOW PROFILE PCB CONNECTOR

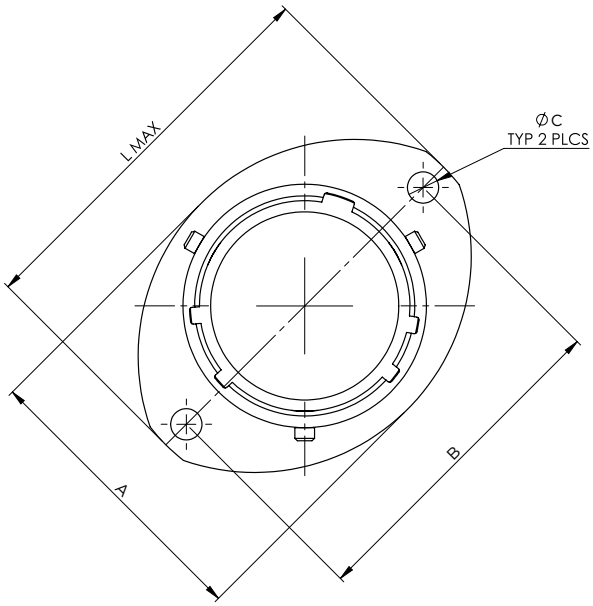

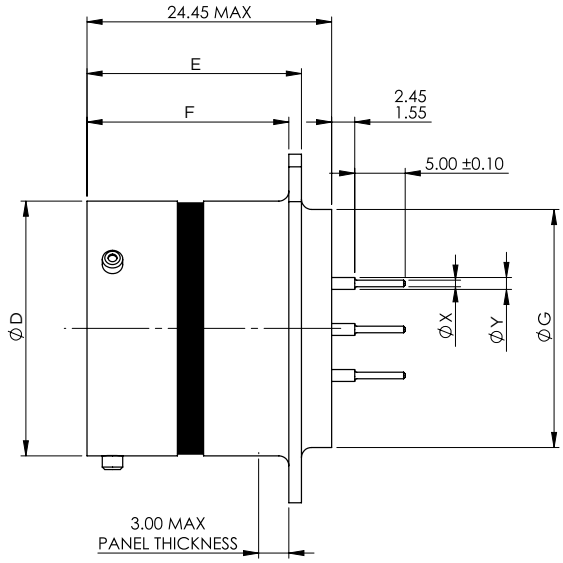

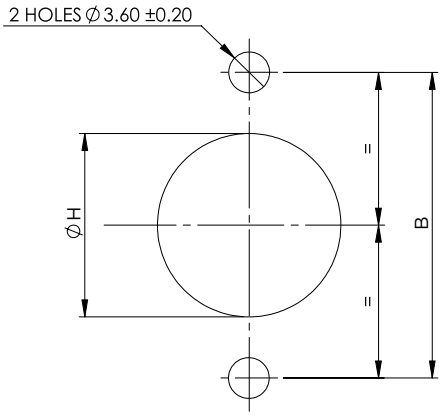

PANEL CUT-OUT DETAILS

Contact Size	Ø X Max.	Ø Y Max.
22	0.72	1.25
20	0.72	1.25
16	1.57	2.61

	Black Zinc Plating	Black Zinc Nickel Plating
Mod Code	118J	120Z

Shell Size	A REF	B ± 0.20	Ø C + 0.1 − 0.0	Ø D + 0.0 − 0.13	E + 0.15 − 0.0	F ± 0.10	Ø G Max.	Ø H ± 0.10	L Max.
8	16.50	21.40		12.00			11.10	14.50	27.20
10	19.50	25.90		15.00			14.27	17.40	32.00
12	24.00	29.10		19.05			17.44	21.90	35.20
14	27.00	32.50		22.22			20.60	25.00	38.40
16	30.30	34.80	3.2	25.40	21.24	20.05	23.77	28.20	41.00
18	33.70	38.20		28.57			26.94	31.40	44.70
20	37.00	41.60		31.75			30.11	34.60	47.90
22	40.00	44.95		34.90			33.29	37.75	51.10
24	43.30	49.35		38.10			36.46	40.90	55.80

All dimensions are in mm unless otherwise stated.

For more information and ordering details please call our TE Technical Support on **+44 (0) 1424 857088** or email **autosport@te.com**

AS3 Through Bulkhead

AS3 THROUGH BULKHEAD

- Military proven design
- Scoop-proof interface with shell to shell grounding
- Positive locking coupling mechanism
- Environmentally sealed to IP67
- Thermal cycle tested
- Fully intermateable with AS range of products
- Gold plated crimp contacts
- 4 hole mounting style

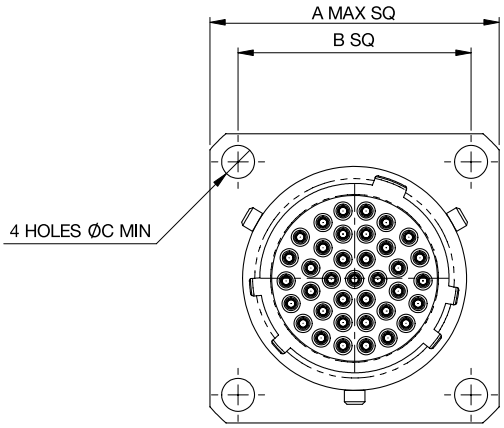

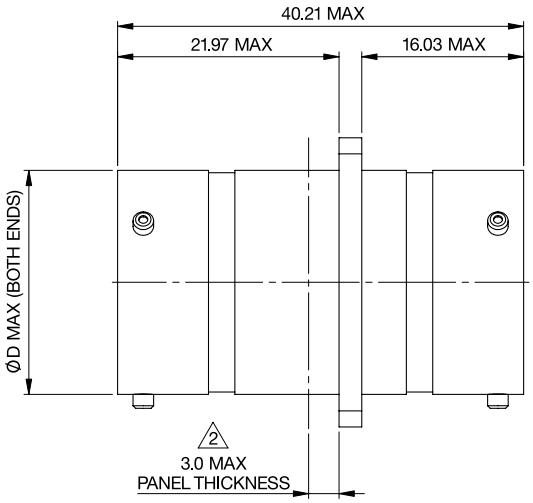

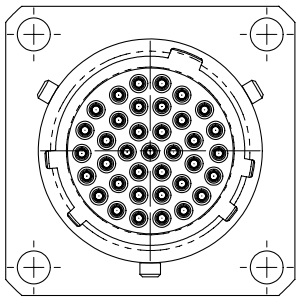

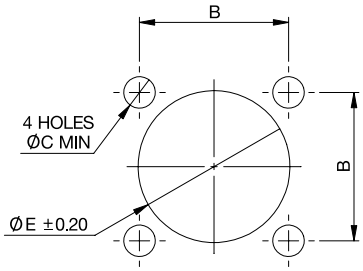

PANEL CUT-OUT

PART NUMBERS	
AS310-35PPN	Further options available, please contact sales offices for details.
AS312-35PPN	
AS314-35PPN	

Contact TE for more details of specific products to meet your sealed electrical connection requirements.

All dimensions are in mm unless otherwise stated.

For more information and ordering details please call our TE Technical Support on **+44 (0) 1424 857088** or email **autosport@te.com**

AS Fiber Optics Series Connectors

AS FIBER OPTIC SOLUTIONS

High quality fiber optic contacts are available in sizes 10-02, 10-03, for any AS Series connector planform having size 16 contact locations, e.g. 12-04, 14-97, 16-08, 20-16, 20-39, 22-21 and 24-29.

The precision ceramic ferruled fiber optic contacts are available for high quality (aerospace type specification) optic cables and silica glass fibers, enabling high speed, EMI / RFI immune data transmission.

The optical contacts are designed to meet MIL-T-29504/5.

Black Zinc Nickel Option

Black Zinc Nickel: All AS Series connectors are available with black zinc nickel plating.

For more information and ordering details please call our TE Technical Support on +44 (0) 1424 857088 or email autosport@te.com

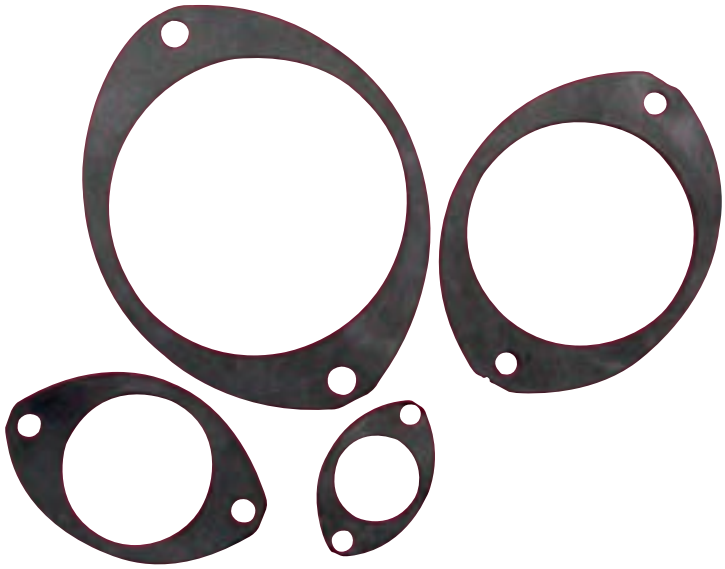

Gaskets

Designed specifically for TE's DEUTSCH autosport flanged connectors, these gaskets are available from size 02 through to 24 shells.

Constructed from fluoroelastomer polymer they assist in sealing the connectors to the mounting point and have been manufactured to withstand the temperatures, vibration and fluids found in the modern racing environment.

For part numbers please refer to page 49.

Nut Plates

Nut plates are available for all AS two-hole flange mounted connector receptacles.

They are designed to simplify connector-to-bulkhead assembly, particularly in confined spaces, by eliminating the need to position loose nuts and washers. Nut plates are also anti-vibration and make assembly quicker and easier.

For part numbers please refer to page 49.

Braid Termination Systems

Attaching braid to the back of an autosport connector can be done in a number of ways, depending on the environment the connector will be operating in. The standard practice of a metal strap on the braid to fasten it to the groove at the back of the shell is seen as a reliable solution with tooling and straps available from a number of sources.

TE Connectivity's engineers would suggest both the TE Connectivity screened backshell options which can be found on-line at www.te.com/usa-en/product-CX6566-000.html or the Glenair Band-IT system which uses the part numbers 600-057 (for the autosport connector sizes up to #16) or 600-083 (for the autosport connector sizes up over #16).

How to Order

ORDERING INFORMATION

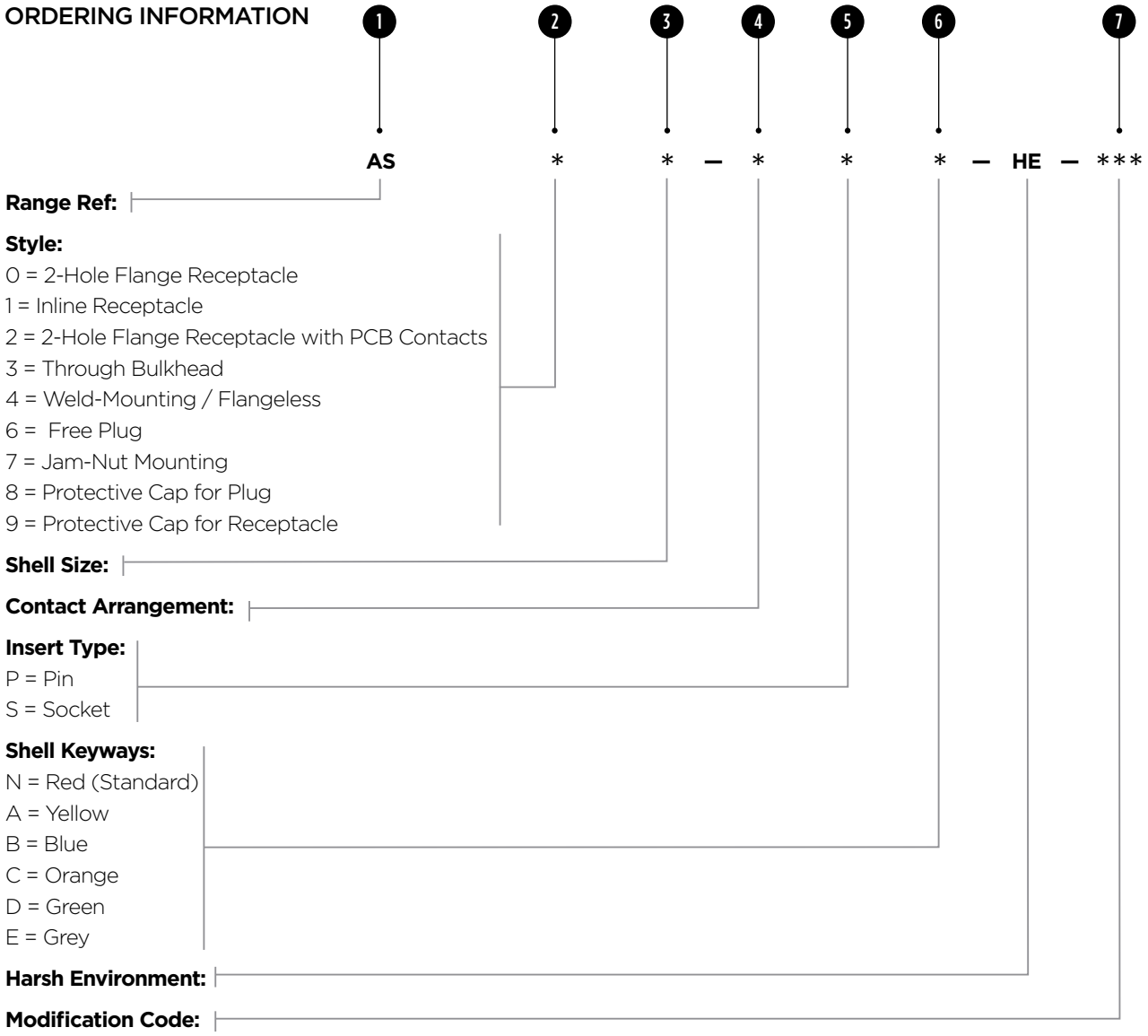

All TE's DEUTSCH autosport part numbers work to the same principles. The part number is broken down into sections as follows:

1. 'AS' indicates that it is an autosport connector - all TE's DEUTSCH autosport connectors start like this. There may be another letter after the AS - this designates a particular series. For example ASL = Micro^{LITE}, ASDD = Double Density.
2. The next major element is the connector style.
   0 = 2 hole flanged receptacle
   1 = Inline receptacle
   2 = 2 hole flanged receptacle with fixed PCB contacts
   3 = Through bulkhead
   4 = Weld mounting / flangeless
   6 = Free plug
   7 = Jam-nut mounting
   8 = Protective cap for plug
   9 = Protective cap for receptacle

   Please note: not all of these options are available on all products; the relevant product pages will give you this information.
3. Relates to the required shell size. This will range from 02 (small) to 24 (large).
4. Is the planform detail (number of contacts).
5. Indicates the gender of a plug or receptacle. 'P' for pin or 'S' for socket.
6. Designates a keyway. Only connectors of the same keyway can mate. The options are: N, A, B, C, D, E or U for universal or no keyway option. The 'U' option should only be selected for test harnesses and not for racing applications.
7. After all these elements there may be a 4-character code, which designates a special modification. For instance this can be a special contact length or a non-standard plating finish. For more information on modification codes please contact the TE Technical Support on **+44 (0) 1424 857 088** or email **autosport@te.com**

   For details of the ordering procedure for your area, please contact the relevant local distributor. A list of these can be found on the reverse of this brochure or on our website **www.te.com/autosport**

Reference Guide

CONTACT TYPE

CONTACT SIZE	PART NO.	P/S	WIRE RANGE	COLOUR BAND	Max. CURRENT	CRIMP TOOL	POSITIONER		PLASTIC TOOLS INSERT/REMOVAL
Size 24 ASDD excluding 9-Way	605719-31	P	24-30	None	3 Amps	M22520/2-01	610286	P	605837 Orange/White
	605721	s					610287	s	
Size 24 ASDD 9 Way, ASX 5/6, ASU 5 Way	605705-31	P	24-30	None	3 Amps	M22520/2-01	605839	P	605837 Orange/White
	605704	s					605840	s	
Size 24 ASDD 7-11	605719-31	P	24-30	None	3 Amps	M22520/2-01	605839	P	605837
	612532	S					M22520/2-09	S	Orange/ White
Size 23	604927-31	P	22-28	None	3 Amps	M22520/2-01	604972	P	M81969/14-01 Green/White
	604935	s					604973	s	
Size 22	38941-22	P	22-26	Orange, Blue, Black	5 Amps	M22520/2-01	M22520/2-09	P	M81969/14-01 Green/White
	38943-22	s		Orange, Yellow, Grey			M22520/2-07	s	
Size 20	38941-20	P	20-24	Orange, Blue, Orange	7.5 Amps	M22520/2-01	M22520/2-10	P	M81969/14-10 Red/Orange
	38943-20	s		Orange, Green, Brown			M22520/2-10	s	
Size 16	38941-16	P	16-20	Orange, Blue, Yellow	20 Amps	M22520/1-01	M22520/1-04	P	M81969/14-03 Blue/White
	38943-16	s		Orange, Green, Red			M22520/1-04	s	
AS Mini Size 22	38941-22	P	22-26	Orange, Blue, Black	5 Amps	M22520/2-01	M22520/2-09	P	M81969/14-01 Green/White
	604887	s		None			605000	s	
AS Mini Size 20	38941-20	P	20-24	Orange, Blue, Orange	7.5 Amps	M22520/2-01	M22520/2-10	P	M81969/14-10 Red/Orange
	6862-201-20278	s		None			M22520/2-10	s	
Size 22 AS Composite/ASU 3-Way, ASX 3-Way	604946-31	P	22-28	None	5 Amps	M22520/2 -01	605463	P	M81969/14-01 Green/White
	604984	s					605464	s	

BOOT INFORMATION

SHELL SIZE	STRAIGHT BOOT		90 DEGREE BOOT	
	RAYCHEM	HELLERMAN	RAYCHEM	HELLERMAN
ASX (Size 02)	203W301-25-G02	1037-4-G	223W601	1182-4-G
ASU (Size 03)	204W221-25-G03	1037-4-G	224W221-25-G03	1182-4-G
ASC	204W221	1030-4-G	224W221	1181-4-G
ASL	204W221	1030-4-G	224W221	1181-4-G
AS Mini	202K121	152-42-G	222K121	1152-4-G
08	202K121	152-42-G	222K121	1152-4-G
10	202K132	152-42-G	222K132	1152-4-G
12	202K142	154-42-G	222K142	1154-4-G
14	202K142	155-42-G	222K142	1155-4-G
16	202K153	156-42-G	222K152	1156-4-G
18	202K153	156-42-G	222K152	1156-4-G
20	202K163	157-43-G	222K163	1157-4-G
22	202K163	157-43-G	222K163	1157-4-G
24	202K174	157-43-G	222K174	1157-4-G

Reference Guide

ACCESSORIES

SHELL SIZE	NUTPLATE	GASKET	PLUG/RECEPTACLE	PROTECTIVE CAP
02 (ASX 3/5)	ATM396-2 M2	GV-2	Plug	611546
			Receptacle	611545
02 (ASX 6 only)	ATM396-2 M2	GV-2	Plug	611637
			Receptacle	611636
03 (ASU 3/5)	ATM396-4 M2	GV-3	Plug	605687
			Receptacle	605684
06 (ASL)	ATM396-6 M2.5	GV-6	Plug	604027
			Receptacle	604029
07 (Mini)	ATM396-7 M3	GV-7	Plug	AS807
			Receptacle	AS907
08	ATM396-8 M3	GV-8	Plug	AS808
			Receptacle	AS908
10	ATM396-10 M3	GV-10	Plug	AS810
			Receptacle	AS910
12	ATM396-12 M3	GV-12	Plug	AS812
			Receptacle	AS912
14	ATM396-14 M3	GV-14	Plug	AS814
			Receptacle	AS914
16	ATM396-16 M3	GV-16	Plug	AS816
			Receptacle	AS916
18	ATM396-18 M3	GV-18	Plug	AS818
			Receptacle	AS918
20	ATM396-20 M3	GV-20	Plug	AS820
			Receptacle	AS920
22	ATM396-22 M3	GV-22	Plug	AS822
			Receptacle	AS922
24	ATM396-24 M3	GV-24	Plug	AS824
			Receptacle	AS924

WIRE SIZES AND DIMENSIONS

AUTOSPORT SIZE		FINISHED WIRE DIMENSIONS			
CONTACT SIZE	WIRE SIZE (AWG)	CONDUCTOR		INSULATION	
		Min.	Max.	Min.	Max.
24	30,28,26,24	0.254mm 0.010in	0.511mm 0.02in	0.56mm 0.22in	1.02mm 0.040in
23	28,26,24,22	0.321mm .012in	0.790mm .031in	0.60mm .023in	1.37mm .054in
22	26,24,22	0.405mm .015in	0.790mm .031in	0.76mm .030in	1.37mm .054in
20	24,22,20	0.511mm .02in	0.970mm .038in	1.02mm .040in	2.11mm .083in
16	20,18,16	0.812mm .031in	1.530mm .60in	1.65mm .65in	2.77mm .109in

FILLER PLUGS

CONTACT SIZE	PART NUMBER
24	600300-24
23	600300-22
22	600300-22
20	600300-20
16	600300-16

Notes

Notes

Empower Engineers to Solve Problems, Moving the World Forward.

AMP | AGASTAT | CII | DEUTSCH | DRI | HARTMAN | KILOVAC
MICRODOT | NANONICS | POLAMCO | Raychem | SEACON

DEUTSCH Autosport Distribution Network	Country	Contact
GR Motorsport Electrics PTY Ltd	Asia Pacific	+61 398 004900
Davum TMC	France	+33 1483 68401
AVIO Race S.r.L	Italy	+39 0597700253 / info@avioraceusa.com
Global Active Technology	Japan	+81 42 945 1515
I S Motorsport Inc	North America	+1 317 244 6643
CosworthElectronics Inc		+1 317 259 8900
Servo Interconnect Ltd	United Kingdom	+44 (0) 1424 857 088

CONNECT WITH US

We make it easy to connect with our experts and are ready to provide all the support you need.
Visit **te.com/support** to chat with a Product Information Specialist.

QUALITY STARTS WITH THE RIGHT APPLICATION TOOLING

Creating a quality crimp connection is essential to delivering high performance and reliability in extreme environments. From low to high volume wire processing, TE has you covered with a full range of application tooling and a global field service team.

- **View all application tooling**
- **Connect with our experts to find the right tool for your application**

te.com/autosport

AMP, AGASTAT, CII, DEUTSCH, DRI, HARTMAN, KILOVAC, MICRODOT, NANONICS, POLAMCO, Raychem, SEACON, TE, TE Connectivity, and TE connectivity (logo) are trademarks owned or licensed by TE Connectivity. All other logos, products and/or company names referred to herein might be trademarks of their respective owners.

The information given herein, including drawings, illustrations and schematics which are intended for illustration purposes only, is believed to be reliable. However, TE Connectivity makes no warranties as to its accuracy or completeness and disclaims any liability in connection with its use. TE Connectivity's obligations shall only be as set forth in TE Connectivity's Standard Terms and Conditions of Sale for this product and in no case will TE Connectivity be liable for any incidental, indirect or consequential damages arising out of the sale, resale, use or misuse of the product. Users of TE Connectivity products should make their own evaluation to determine the suitability of each such product for the specific application.

© 2022 TE Connectivity All Rights Reserved.

1-1773721-8 12/22

DEUTSCH AUTOSPORT INTERCONNECTION SOLUTIONS

TE Connectivity
Aerospace, Defense & Marine
2900 Fulling Mill Road
Middletown, PA 17057