PART NUMBER	POS. 1	POS. 2	POS. 3	POS. 4	POS. 5	POS. 6	POS. 7	POS. 8
553-0008-811	BLANK	GREEN	BLANK	GREEN	BLANK	BLANK	BLANK	BLANK
553-0008-812	RED	YELLOW	RED	YELLOW	BLANK	BLANK	BLANK	BLANK
553-0008-813	RED	YELLOW	RED	YELLOW	RED	YELLOW	RED	YELLOW
553-0008-814	RED	YELLOW	BLANK	BLANK	BLANK	BLANK	BLANK	BLANK
553-0008-815	RED	YELLOW	BLANK	BLANK	BLANK	BLANK	BLANK	GREEN

REV.	ECN NO.	REVISIONS	DRN.	CKD.	APP.	DATE
C	——	ADDED 553-0008-815 TO DWG.	LR		N.O.	12-12-95
D	——	ON P/N 553-0008-815 POS. 2 YELLOW WAS BLANK, POS. 5 BLANK WAS YELLOW.	LR		N.O.	2-2-96
E	——	REVISED RED LED SPECS; ADDED NOTE 1.	TC	DC	N.O.	10-30-98
F	——	LED LEAD TRIM .130 ±.010 WAS .110 ±.015. CHANGED GREEN LED SPEC.	DC	Y.C.	N.O.	3-5-99
G	——	REVISED YELLOW LED SPECS.	TC			

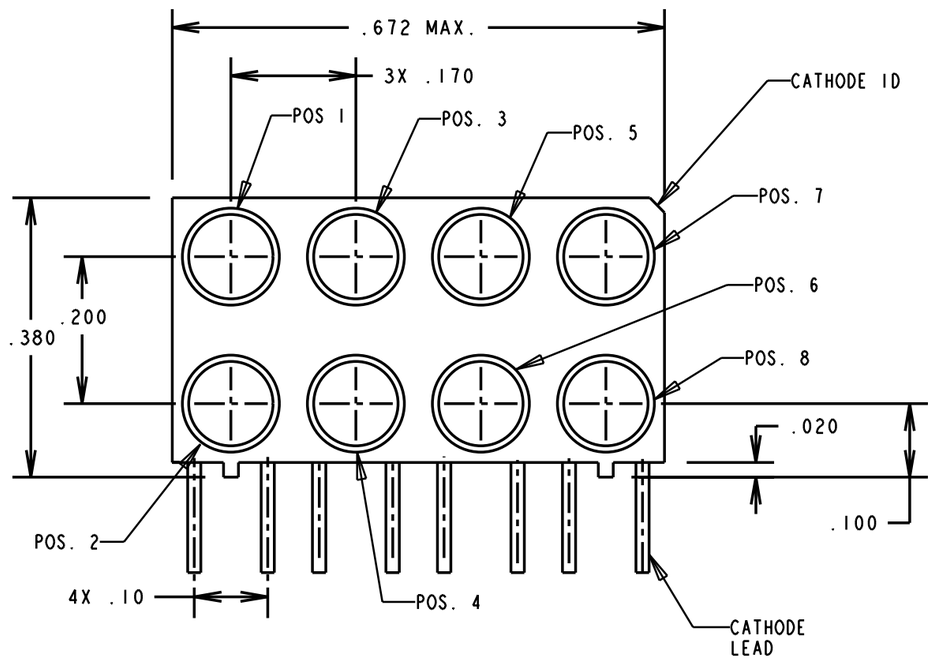

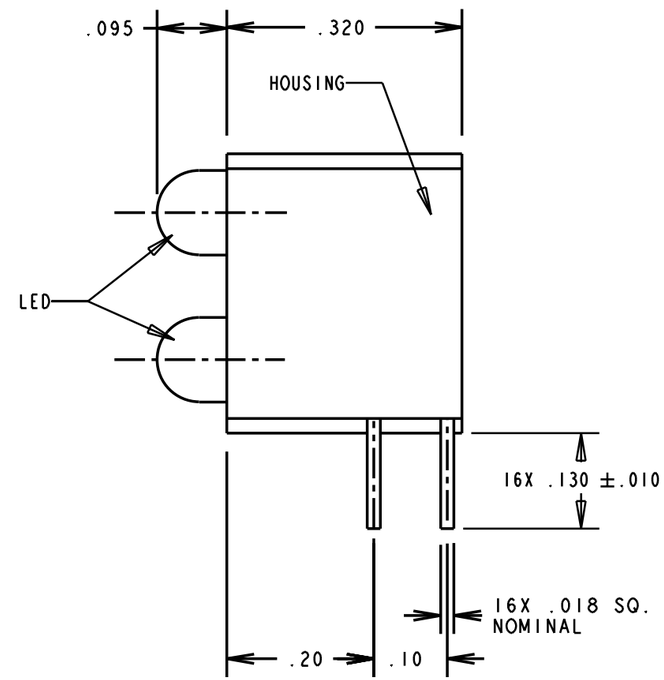

NOTE:

1. DIALIGHT PART NUMBER: 553-0008-811 THRU -815.

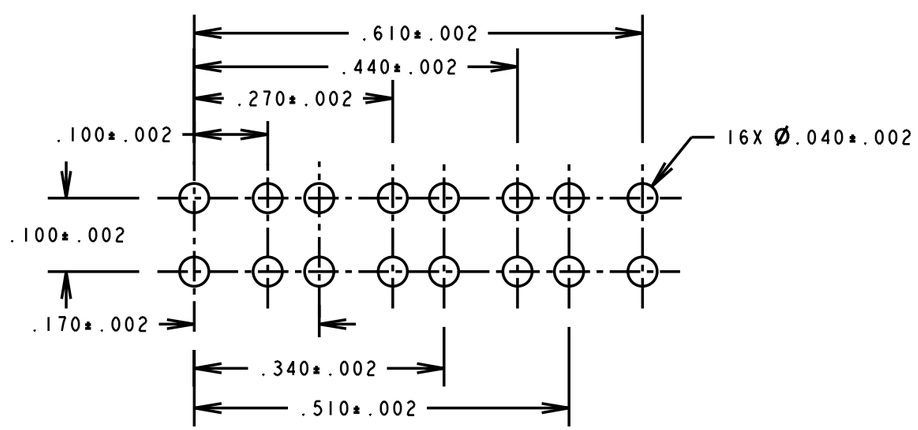

RECOMMENDED PC BOARD HOLE PATTERN

OPERATING CHARACTERISTICS AT T_A =25 C°

SYMBOL	PARAMETER	COLOR	MIN	TYP	MAX	UNITS	TEST COND.
V_F	FORWARD VOLTAGE	RED		2.0	2.8	V	I_F = 20 mA
		YELLOW		2.1	2.8	V	I_F = 20 mA
		GREEN		2.1	2.8		I_F = 20 mA
V_R		ALL	5			V	I_R = 100µA
λ_{PK}	PEAK WAVELENGTH	RED		635		nm	MEASURED AT PEAK
		YELLOW		585			
		GREEN		565			
I_V	LUMINOUS INTENSITY	RED	7.4	10.0		mcd	I_F = 10 mA
		YELLOW	7.4	10.0			
		GREEN	4.7	12.6			

THIS DRAWING AND THE CONTENTS HEREIN ARE CONFIDENTIAL AND THE SOLE PROPERTY OF DIALIGHT. REPRODUCTION OF THIS DRAWING OR CONSTRUCTION OF ANY PARTS WITHIN THIS DRAWING ARE FORBIDDEN WITHOUT THE WRITTEN CONSENT OF DIALIGHT.

SCALE 5:1

ALL DIM'S IN: INCHES

TOLERANCES:
UNLESS OTHERWISE SPECIFIED

FRACTIONS: ±1/64
DECIMALS (.XX): ±.020
DECIMALS (.XXX): ±.015

ANGLES: ±1°

FINISH:

FSCM 83330

DRAWING NUMBER C-16016

REV G

TITLE

MATERIAL

Dialight

1913 ATLANTIC AVE.
MANASQUAN, N.J. 08736

SHEET OF

FAMILY TABLE: