CONEC®

TECHNOLOGY IN CONNECTORS™

SENSOR ACTOR LINE

CONEC®

TECHNOLOGY IN CONNECTORS™

GERMANY

As a leading connector manufacturer CONEC develops, produces and markets connectors worldwide to the electronic and communications industry. CONEC is committed to contribute to progress in interconnect technology, and to satisfy and delight customers through innovation, quality manufacturing and superior services.

CONEC provides global account management in a customer's home country and combines the information received for product and design and delivery of the end product to the customer's multiple manufacturing locations worldwide.

Local sales and engineering support around the globe provides the customer knowledgeable assistance in their own language to fully communicate and to understand the needs of their business environment.

CANADA

USA

CONEC designs and manufactures a wide variety of electronic connector products.
CONEC provides reliable and effective solutions to problems faced by electronic equipment manufacturers, contract manufacturers and cable assembly operations.

At CONEC, customer satisfaction is priority number one.

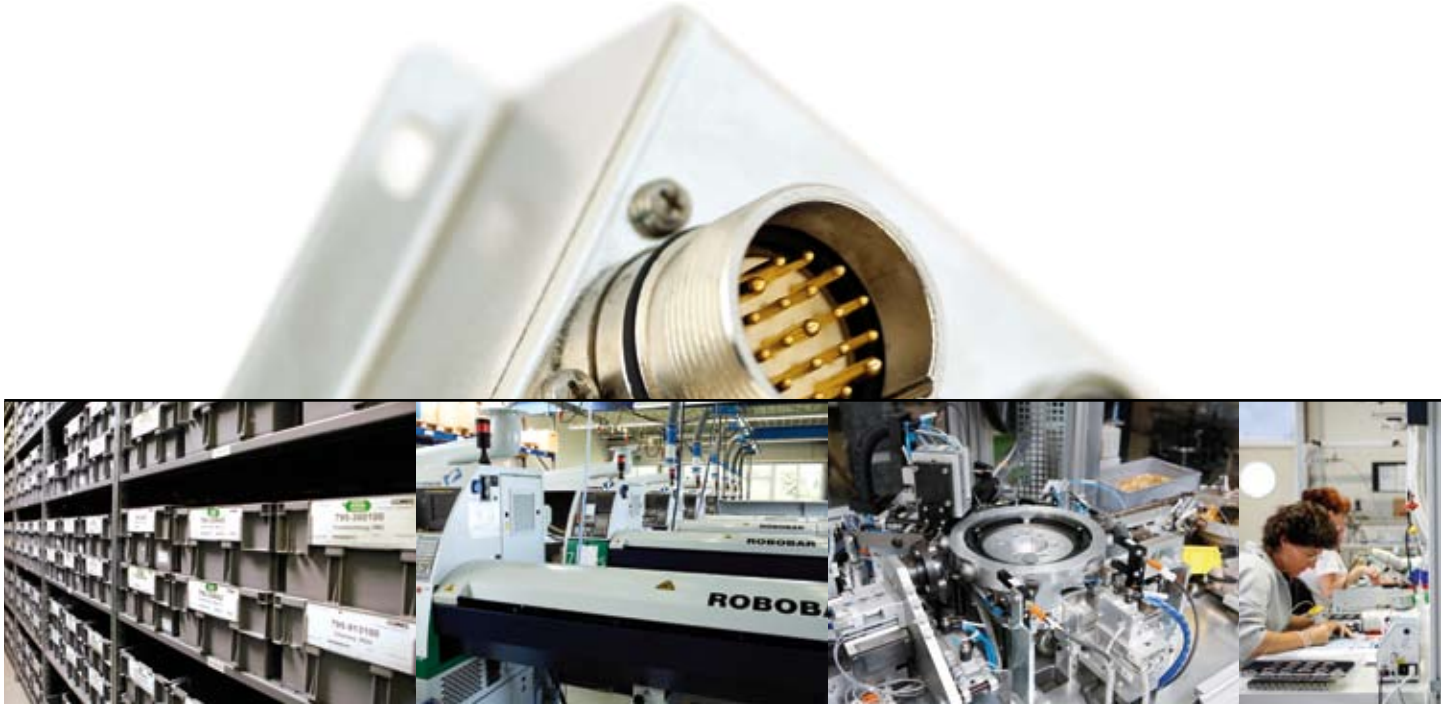

CONEC prides itself with its total quality management system. The customer's requirements and specifications are fully adhered to, from the design phase, through to the final approved series product. Close coordination on all levels is carried out with the customer. From the initial design concept to the end product our engineering group works closely with the customer at all times.
CONEC project management system allows for timely conclusion. CONEC is certified under **ISO/TS16949:2002.**

CONEC prides itself with having one of the most technical advanced in house test laboratories, allowing for accurate testing and measurement of its products. At CONEC we believe that customer service combined with quality products at an affordable price provides customer satisfaction. CONEC connectors are examined and certified according to the product family UL–CSA–VDE.

Your Source for Customer specific application, development and production.

CONEC is fast to respond to the customer's needs, with "just in time" programs, logistic requirements, local inventories, central order entry and processing, broad distribution and total quality management. CONEC has earned certified supplier status with many of its large customers worldwide.

Are you searching for an application specific solution?
Standard products are not suitable?
Time to market is priority?

CONEC with its team of engineering and know how to help you find the answer, e.g.:

- Special connectors according to customer specification
- Prototypes
- Fiber connectors for industrial applications

Contact us today for fast and efficent response.

Index

1 | 1 **Section 1**
Connectors M12x1 with overmoulded cable
Nomenclature – Technical Data 1 | 2
Female/male connectors standard 1 | 4
Female connectros with LED 1 | 14
Female/male connectors, shielded 1 | 16
Connecting cables standard 1 | 20
Connecting cables with LED 1 | 32
Connecting cables, shielded 1 | 34
Connecting cables M12 - M8x1 1 | 36

2 | 1 **Section 2**
Connectors M12x1 field-attachable
Nomenclature – Technical Data 2 | 2
Field-attachable variants standard 2 | 4
Field-attachable variants, shielded 2 | 12

3 | 1 **Section 3**
Sockets M12x1
Nomenclature – Technical Data 3 | 2
Sockets standard 3 | 4
Sockets, for assembly on printing board 3 | 20

4 | 1 **Section 4**
Junction systems M12x1/M8x1
Nomenclature – Technical Data 4 | 2
Y-splitter M12x1/M8x1 4 | 6
Junction boxes M12x1 4 | 10
Junction boxes M8x1 4 | 14

5 | 1 **Section 5**
Connectors M12x1 for special applications
Nomenclature – Technical Data 5 | 2
Female/male connectors High Temperature 5 | 8
Connecting cables High Temperature 5 | 12
Sockets High Temperature 5 | 14
Female/male connectors Food&Beverage 5 | 22
Female connectors Food&Beverage with LED 5 | 26
Connecting cables Food&Beverage 5 | 28
Sockets Food&Beverage 5 | 32
Junction systems Food&Beverage 5 | 36

6 | 1 **Section 6**
Conectors M12x1 for bus systems
Nomenclature – Technical Data 6 | 2
Female/male connectors Profibus DP 6 | 12
Connecting cables Profibus DP 6 | 14
Y-splitter Profibus DP 6 | 15
Field-attachable variants 6 | 16
Sockets Profibus DP standard 6 | 20
Sockets Profibus DP, for assembly on printing board 6 | 28
Connecting cables Profibus DP, special versions 6 | 40
SUB-D 6 | 43
Male connectors Industrial Ethernet 6 | 46
Connecting cables Industrial Ethernet 6 | 47
Sockets Industrial Ethernet standard 6 | 48
Sockets Industrial Ethernet for assembly on printing board 6 | 52

7 | 1 **Section 7**
Connectors M8x1/Ø8mm
Nomenclature – Technical Data 7 | 2
Female/male connectors M8x1 7 | 4
Female/male connectors Ø8mm 7 | 8
Connecting cables 7 | 12

8 | 1 **Section 8**
Connectors 7/8"
Nomenclature – Technical Data 8 | 2
Female/male connectors 8 | 6
Connecting cables 8 | 14
Field-attachable variants 8 | 22

9 | 1 **Section 9**
Connectors Rund24
Nomenclature – Technical Data 9 | 2
Connecting cables 9 | 6
Field-attachable variants 9 | 10

10 | 1 **Section 10**
Valveplugs
Nomenclature – Technical Data 10 | 2
Valve plugs 10 | 4

11 | 1 **Section 11**
Accessories/Cable matrix/Technical information
11 | 1

12 | 1 **Section 12**
Index numeric
12 | 2

Section 1

Connectors M12x1 with overmoulded cable

M12 x 1 circular connectors of the Sensor Actor Line from CONEC are used to connect a distributor box and a sensor.

They provide innovative connection technology fulfilling the requirements of protection class IP 67. It comes in a standard program with moulded versions – naturally with anti-vibration locking and they come in various cable lengths and quality.

Components with 2 or 3 LEDs indicate operating voltage and/or the switching status.

When it gets really tough: Shielded connectors from CONEC protect and bypass weak signals. A uniform cable shielding ensures seamless signal transmission.

Connection cables with a combination of connectors and/or adapters can be used for nearly any cabling application.

SAL M12x1 Connectors overermoulded

Nomenclature

S A L - 1 2 ■ - R K W 4 - 3 L - 3 / A 1

SAL
Sensor Actor Line

Installation size
12 = M12x1

Coding
= A-coding
S = A-coding shielded

Building
R = Circular connector

Configuration
K = Female connector
S = Male connector

Building
= Axial
W = Angled

Number of poles
3 = 3-pos
4 = 4-pos
5 = 5-pos
6 = 6-pos
8 = 8-pos
12 = 12-pos

LED-display-Display
2L = 2 LED-display
3L = 3 LED-display

Cable length
XX = Length [m]

Cable quality
A1 = PVC, grey
A3 = PVC, grey, UL
G2 = TPU, black, shielded, UL
G3 = PVC, grey, shielded, UL
J1 = TPU, orange, irradiated, halogenfree, UL
K1 = TPU, black, high flexible, halogenfree, UL

SAL M12x1 Connectors overermoulded

Technical Data

Basic material	
Contact	CuZn
Contact plating	Nickel-plated, gold-plated
Contact carrier	TPU GF, UL 94
Moulding body standard configuration	TPU, UL 94, grey
Moulding body LED-display configuration	TPU, UL 94, transluzent
Sealing	FPM
Coupling nut/-screw	CuZn, nickel-plated

Information on the following pages are basing on below mentioned IEC-standards.

Rated voltage	IEC 61076-2-101
Current rating	IEC 61076-2-101
Insulation resistance	IEC 60512-2
Pollution degree	IEC 60664-1
Degree of protection	IEC 60529
Temperature range	IEC 60664-1
Mating cycles	IEC 61076-2-101

Technical subject to change without notice.

SAL M12x1 Connectors

Female connector, axial

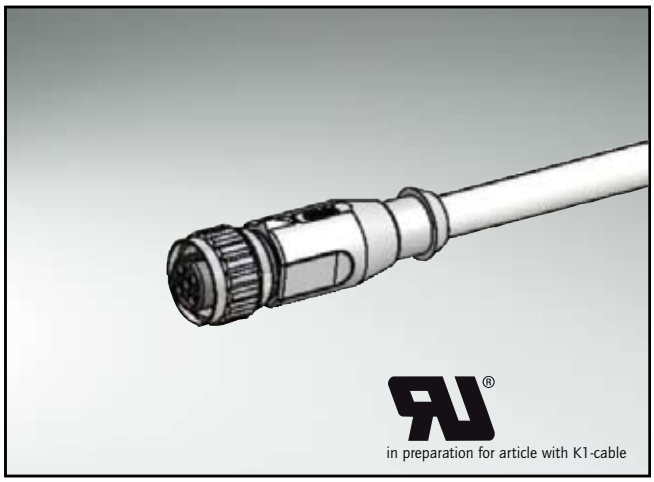

Technical Data

	3-pos	4-pos	5-pos
Rated voltage	250V	250V	60V
Current rating	4A at +40°C		
Pollution degree	3/2		
Insulation resistance	=$10^9\Omega$		
Degree of protection	IP67 in mated condition		
Temperature range	-30°C to +80°C		
Mating cycles	<=100		

Directive 2002 95 EC „RoHS" Compliant

Pin configuration

3-pos

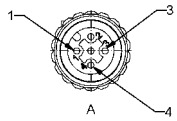

4-pos

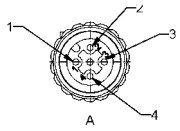

5-pos

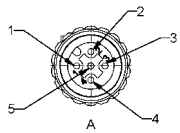

Contact assignment 3 - 5-pos

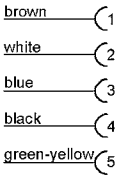

Dimension drawing

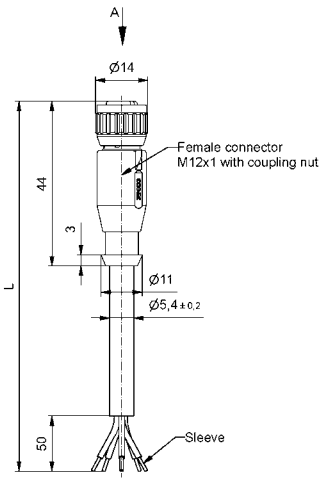

Order data

Cable	Length/L	Description	3-pos Part-no.	Description	4-pos Part-no.	Description	5-pos Part-no.
PVC, grey LiYY 0,34mm²	2m	SAL-12-RK3-2/A1	43-10000	SAL-12-RK4-2/A1	43-10020	SAL-12-RK5-2/A1	43-10040
	3m	SAL-12-RK3-3/A1	43-10001	SAL-12-RK4-3/A1	43-10021	SAL-12-RK5-3/A1	43-10041
	5m	SAL-12-RK3-5/A1	43-10002	SAL-12-RK4-5/A1	43-10022	SAL-12-RK5-5/A1	43-10042
	10m	SAL-12-RK3-10/A1	43-10003	SAL-12-RK4-10/A1	43-10023	SAL-12-RK5-10/A1	43-10043
TPU, high flexible halogenfree, UL black Li9Y11Y 0,34mm²	2m	SAL-12-RK3-2/K1	43-10012	SAL-12-RK4-2/K1	43-10032	SAL-12-RK5-2/K1	43-10052
	3m	SAL-12-RK3-3/K1	43-10013	SAL-12-RK4-3/K1	43-10033	SAL-12-RK5-3/K1	43-10053
	5m	SAL-12-RK3-5/K1	43-10014	SAL-12-RK4-5/K1	43-10034	SAL-12-RK5-5/K1	43-10054
	10m	SAL-12-RK3-10/K1	43-10015	SAL-12-RK4-10/K1	43-10035	SAL-12-RK5-10/K1	43-10055
TPU, irradiated halogenfree, UL orange Li9Y11X 0,34mm²	2m	SAL-12-RK3-2/J1	43-10016	SAL-12-RK4-2/J1	43-10036	SAL-12-RK5-2/J1	43-10056
	3m	SAL-12-RK3-3/J1	43-10017	SAL-12-RK4-3/J1	43-10037	SAL-12-RK5-3/J1	43-10057
	5m	SAL-12-RK3-5/J1	43-10018	SAL-12-RK4-5/J1	43-10038	SAL-12-RK5-5/J1	43-10058
	10m	SAL-12-RK3-10/J1	43-10019	SAL-12-RK4-10/J1	43-10039	SAL-12-RK5-10/J1	43-10059

For custom length or quality levels contact factory.

SAL M12X1 CONNECTORS

Female connector, axial

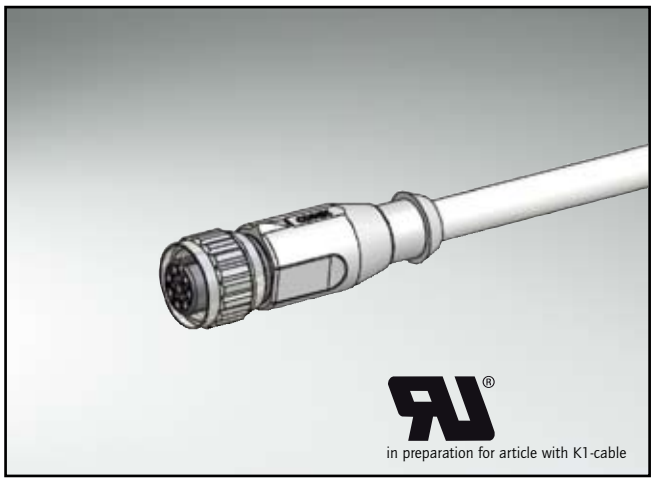

TECHNICAL DATA

	6-pos	8-pos
Rated voltage	30V	30V
Current rating	2A at +40°C	
Pollution degree	3/2	
Insulation resistance	=$10^9\Omega$	
Degree of protection	IP67 in mated condition	
Temperature range	-30°C to +80°C	
Mating cycles	<=100	

Directive 2002 95 EC „RoHS" Compliant

PIN CONFIGURATION

6-pos

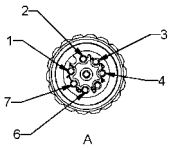

8-pos

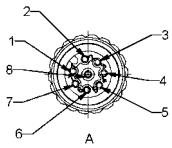

CONTACT ASSIGNMENT 6-POS

brown	1	n.c.	5
white	2	grey	6
blue	3	pink	7
black	4	n.c.	8

CONTACT ASSIGNMENT 8-POS

white	1	grey	5
brown	2	pink	6
green	3	blue	7
yellow	4	red	8

DIMENSION DRAWING

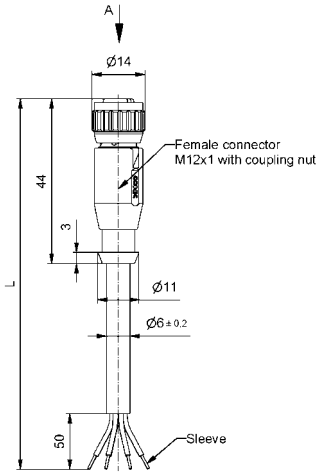

ORDER DATA

Cable	Length/L	Description	6-pos Part-no.	Description	8-pos Part-no.
PVC, grey LiYY 0,25mm²	2m	SAL-12-RK6-2/A1	43-10060	SAL-12-RK8-2/A1	43-10072
	3m	SAL-12-RK6-3/A1	43-10061	SAL-12-RK8-3/A1	43-10073
	5m	SAL-12-RK6-5/A1	43-10062	SAL-12-RK8-5/A1	43-10074
	10m	SAL-12-RK6-10/A1	43-10063	SAL-12-RK8-10/A1	43-10075
TPU, high flexible halogenfree, UL black Li9Y11Y 0,25mm²	2m	SAL-12-RK6-2/K1	43-11038	SAL-12-RK8-2/K1	43-11034
	3m	SAL-12-RK6-3/K1	43-11039	SAL-12-RK8-3/K1	43-11035
	5m	SAL-12-RK6-5/K1	43-11040	SAL-12-RK8-5/K1	43-11036
	10m	SAL-12-RK6-10/K1	43-11041	SAL-12-RK8-10/K1	43-11037

For custom length or quality levels contact factory.

SAL M12x1 Connectors

Female connector, axial

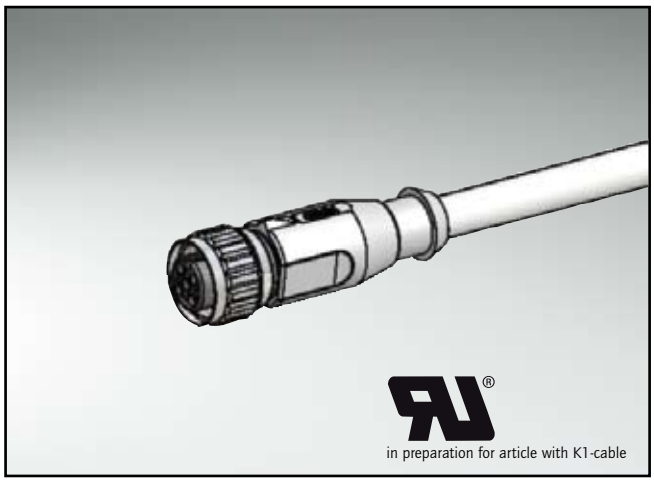

Technical Data

Rated voltage	12-pos / 30V
Current rating	1,5A at +40°C
Pollution degree	3/2
Insulation resistance	=$10^9\Omega$
Degree of protection	IP67 in mated condition
Temperature range	-30°C to +80°C
Mating cycles	<=100

Directive 2002 95 EC „RoHS" Compliant

Pin configuration

12-pos

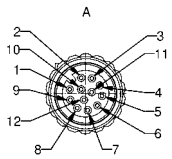

Contact assignment 12-pos

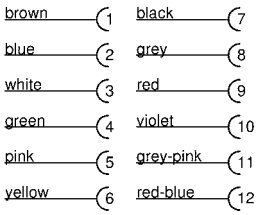

Dimension drawing

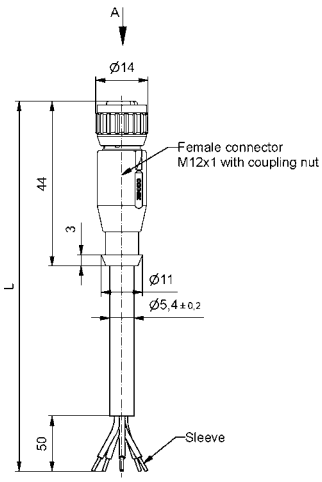

Order data

Cable	Length/L	Description	12-pos Part-no.
PVC, UL grey LiYY 0,14mm²	2m	SAL-12-RK12-2/A3	43-11264
	3m	SAL-12-RK12-3/A3	43-11265
	5m	SAL-12-RK12-5/A3	43-11266
	10m	SAL-12-RK12-10/A3	43-11267
TPU, high flexible halogenfree, UL black Li9Y11Y 0,14mm²	2m	SAL-12-RK12-2/K1	43-11268
	3m	SAL-12-RK12-3/K1	43-11269
	5m	SAL-12-RK12-5/K1	43-11270
	10m	SAL-12-RK12-10/K1	43-11271

For custom length or quality levels contact factory.

SAL M12X1 CONNECTORS

Male connector, axial

TECHNICAL DATA

	3-pos	4-pos	5-pos
Rated voltage	250V	250V	60V
Current rating	4A at +40°C		
Pollution degree	3/2		
Insulation resistance	=$10^9\Omega$		
Degree of protection	IP67 in mated condition		
Temperature range	-30°C to +80°C		
Mating cycles	<=100		

Directive 2002 95 EC „RoHS" Compliant

PIN CONFIGURATION

3-pos

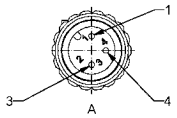

4-pos

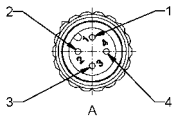

5-pos

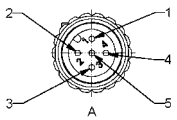

CONTACT ASSIGNMENT 3 - 5-POS

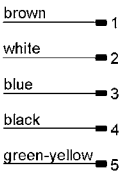

DIMENSION DRAWING

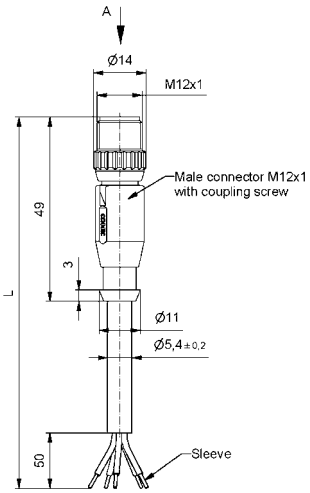

ORDER DATA

Cable	Length/L	Description	3-pos Part-no.	Description	4-pos Part-no.	Description	5-pos Part-no.
PVC, grey LiYY 0,34mm²	2m	SAL-12-RS3-2/A1	43-10084	SAL-12-RS4-2/A1	43-10104	SAL-12-RS5-2/A1	43-10124
	3m	SAL-12-RS3-3/A1	43-10085	SAL-12-RS4-3/A1	43-10105	SAL-12-RS5-3/A1	43-10125
	5m	SAL-12-RS3-5/A1	43-10086	SAL-12-RS4-5/A1	43-10106	SAL-12-RS5-5/A1	43-10126
	10m	SAL-12-RS3-10/A1	43-10087	SAL-12-RS4-10/A1	43-10107	SAL-12-RS5-10/A1	43-10127
TPU, high flexible halogenfree, UL black Li9Y11Y 0,34mm²	2m	SAL-12-RS3-2/K1	43-10096	SAL-12-RS4-2/K1	43-10116	SAL-12-RS5-2/K1	43-10136
	3m	SAL-12-RS3-3/K1	43-10097	SAL-12-RS4-3/K1	43-10117	SAL-12-RS5-3/K1	43-10137
	5m	SAL-12-RS3-5/K1	43-10098	SAL-12-RS4-5/K1	43-10118	SAL-12-RS5-5/K1	43-10138
	10m	SAL-12-RS3-10/K1	43-10099	SAL-12-RS4-10/K1	43-10119	SAL-12-RS5-10/K1	43-10139
TPU, irradiated halogenfree, UL orange Li9Y11X 0,34mm²	2m	SAL-12-RS3-2/J1	43-10100	SAL-12-RS4-2/J1	43-10120	SAL-12-RS5-2/J1	43-10140
	3m	SAL-12-RS3-3/J1	43-10101	SAL-12-RS4-3/J1	43-10121	SAL-12-RS5-3/J1	43-10141
	5m	SAL-12-RS3-5/J1	43-10102	SAL-12-RS4-5/J1	43-10122	SAL-12-RS5-5/J1	43-10142
	10m	SAL-12-RS3-10/J1	43-10103	SAL-12-RS4-10/J1	43-10123	SAL-12-RS5-10/J1	43-10143

For custom length or quality levels contact factory.

SAL M12x1 Connectors

Male connector, axial

Technical Data

	6-pos	8-pos
Rated voltage	30V	30V
Current rating	2A at +40°C	
Pollution degree	3/2	
Insulation resistance	=$10^9\Omega$	
Degree of protection	IP67 in mated condition	
Temperature range	-30°C to +80°C	
Mating cycles	<=100	

Directive 2002 95 EC „RoHS" Compliant

Pin configuration

6-pos

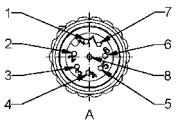

8-pos

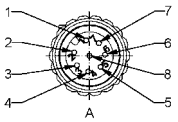

Contact assignment 6-pos

brown	1	n.c.	5
white	2	grey	6
blue	3	pink	7
black	4	n.c.	8

Contact assignment 8-pos

white	1	grey	5
brown	2	pink	6
green	3	blue	7
yellow	4	red	8

Dimension drawing

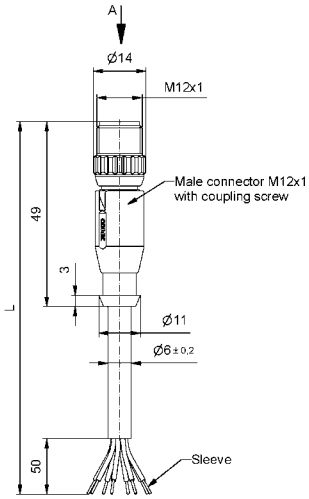

Order data

Cable	Length/L	Description	6-pos Part-no.	Description	8-pos Part-no.
PVC, grey LiYY 0,25mm²	2m	SAL-12-RS6-2/A1	43-10144	SAL-12-RS8-2/A1	43-10156
	3m	SAL-12-RS6-3/A1	43-10145	SAL-12-RS8-3/A1	43-10157
	5m	SAL-12-RS6-5/A1	43-10146	SAL-12-RS8-5/A1	43-10158
	10m	SAL-12-RS6-10/A1	43-10147	SAL-12-RS8-10/A1	43-10159
TPU, high flexible halogenfree, UL black Li9Y11Y 0,25mm²	2m	SAL-12-RS6-2/K1	43-11058	SAL-12-RS8-2/K1	43-11062
	3m	SAL-12-RS6-3/K1	43-11059	SAL-12-RS8-3/K1	43-11063
	5m	SAL-12-RS6-5/K1	43-11060	SAL-12-RS8-5/K1	43-11064
	10m	SAL-12-RS6-10/K1	43-11061	SAL-12-RS8-10/K1	43-11065

For custom length or quality levels contact factory.

SAL M12x1 Connectors

Male connector, axial

Technical Data

Rated voltage	12-pos / 30V
Current rating	1,5A at +40°C
Pollution degree	3/2
Insulation resistance	=$10^9\Omega$
Degree of protection	IP67 in mated condition
Temperature range	-30°C to +80°C
Mating cycles	<=100

Directive 2002 95 EC „RoHS" Compliant

Pin configuration

12-pos

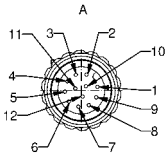

Contact assignment 12-pos

brown	1	black	7
blue	2	grey	8
white	3	red	9
green	4	violet	10
pink	5	grey-pink	11
yellow	6	red-blue	12

Dimension drawing

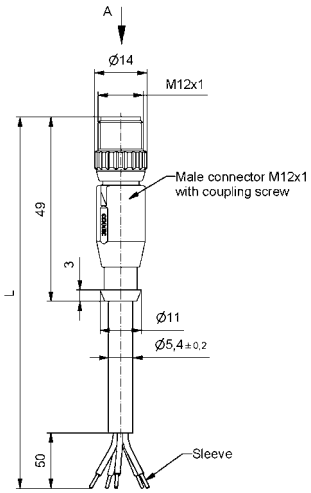

Order data

Cable	Length/L	Description	12-pos Part-no.
PVC, UL grey LiYY 0,14mm²	2m	SAL-12-RS12-2/A3	43-11272
	3m	SAL-12-RS12-3/A3	43-11273
	5m	SAL-12-RS12-5/A3	43-11274
	10m	SAL-12-RS12-10/A3	43-11275
TPU, high flexible halogenfree, UL black Li9Y11Y 0,14mm²	2m	SAL-12-RS12-2/K1	43-11276
	3m	SAL-12-RS12-3/K1	43-11277
	5m	SAL-12-RS12-5/K1	43-11278
	10m	SAL-12-RS12-10/K1	43-11279

For custom length or quality levels contact factory.

SAL M12x1 Connectors

Female connector, angled

Technical Data

	3-pos	4-pos	5-pos
Rated voltage	250V	250V	60V
Current rating	4A at +40°C		
Pollution degree	3/2		
Insulation resistance	=$10^9\Omega$		
Degree of protection	IP67 in mated condition		
Temperature range	-30°C to +80°C		
Mating cycles	<=100		

Directive 2002 95 EC „RoHS" Compliant

Pin configuration

3-pos

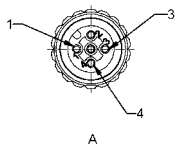

4-pos

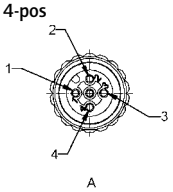

5-pos

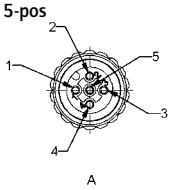

Contact assignment 3 - 5-pos

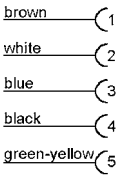

Dimension drawing

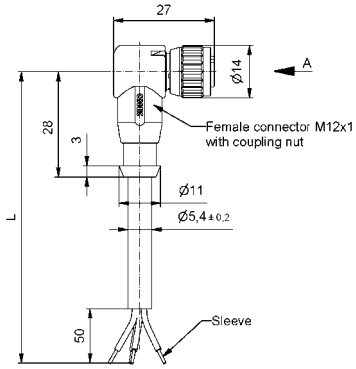

Order data

Cable	Length/L	Description	3-pos Part-no.	Description	4-pos Part-no.	Description	5-pos Part-no.
PVC, grey LiYY 0,34mm²	2m	SAL-12-RKW3-2/A1	43-10168	SAL-12-RKW4-2/A1	43-10188	SAL-12-RKW5-2/A1	43-10208
	3m	SAL-12-RKW3-3/A1	43-10169	SAL-12-RKW4-3/A1	43-10189	SAL-12-RKW5-3/A1	43-10209
	5m	SAL-12-RKW3-5/A1	43-10170	SAL-12-RKW4-5/A1	43-10190	SAL-12-RKW5-5/A1	43-10210
	10m	SAL-12-RKW3-10/A1	43-10171	SAL-12-RKW4-10/A1	43-10191	SAL-12-RKW5-10/A1	43-10211
TPU, high flexible halogenfree, UL black Li9Y11Y 0,34mm²	2m	SAL-12-RKW3-2/K1	43-10180	SAL-12-RKW4-2/K1	43-10200	SAL-12-RKW5-2/K1	43-10220
	3m	SAL-12-RKW3-3/K1	43-10181	SAL-12-RKW4-3/K1	43-10201	SAL-12-RKW5-3/K1	43-10221
	5m	SAL-12-RKW3-5/K1	43-10182	SAL-12-RKW4-5/K1	43-10202	SAL-12-RKW5-5/K1	43-10222
	10m	SAL-12-RKW3-10/K1	43-10183	SAL-12-RKW4-10/K1	43-10203	SAL-12-RKW5-10/K1	43-10223
TPU, irradiated halogenfree, UL orange Li9Y11X 0,34mm²	2m	SAL-12-RKW3-2/J1	43-10184	SAL-12-RKW4-2/J1	43-10204	SAL-12-RKW5-2/J1	43-10224
	3m	SAL-12-RKW3-3/J1	43-10185	SAL-12-RKW4-3/J1	43-10205	SAL-12-RKW5-3/J1	43-10225
	5m	SAL-12-RKW3-5/J1	43-10186	SAL-12-RKW4-5/J1	43-10206	SAL-12-RKW5-5/J1	43-10226
	10m	SAL-12-RKW3-10/J1	43-10187	SAL-12-RKW4-10/J1	43-10207	SAL-12-RKW5-10/J1	43-10227

For custom length or quality levels contact factory.

SAL M12x1 Connectors

Female connector, angled

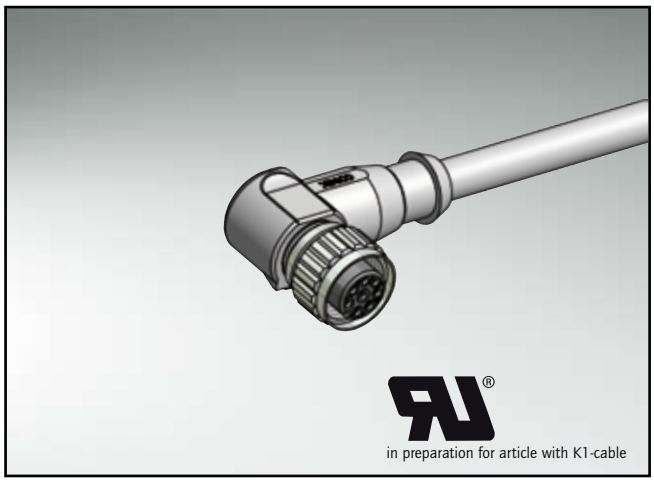

Technical Data

	6-pos	8-pos
Rated voltage	30V	30V
Current rating	2A at +40°C	
Pollution degree	3/2	
Insulation resistance	=$10^9\Omega$	
Degree of protection	IP67 in mated condition	
Temperature range	-30°C to +80°C	
Mating cycles	<=100	

Directive 2002 95 EC „RoHS" Compliant

Pin configuration

6-pos

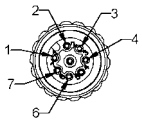

8-pos

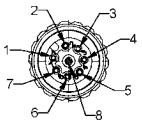

Contact assignment 6-pos

brown	1	n.c.	5
white	2	grey	6
blue	3	pink	7
black	4	n.c.	8

Contact assignment 8-pos

white	1	grey	5
brown	2	pink	6
green	3	blue	7
yellow	4	red	8

Dimension drawing

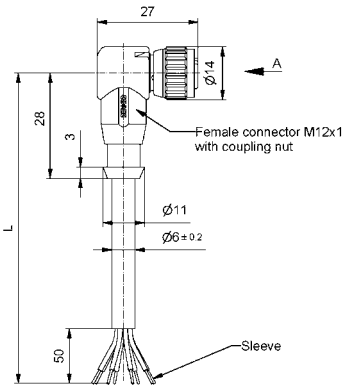

Order data

Cable	Length/L	Description	6-pos Part-no.	Description	8-pos Part-no.
PVC, grey LiYY 0,25mm²	2m	SAL-12-RKW6-2/A1	43-10228	SAL-12-RKW8-2/A1	43-10240
	3m	SAL-12-RKW6-3/A1	43-10229	SAL-12-RKW8-3/A1	43-10241
	5m	SAL-12-RKW6-5/A1	43-10230	SAL-12-RKW8-5/A1	43-10242
	10m	SAL-12-RKW6-10/A1	43-10231	SAL-12-RKW8-10/A1	43-10243
TPU, high flexible halogenfree, UL black Li9Y11Y 0,25mm²	2m	SAL-12-RKW6-2/K1	43-11046	SAL-12-RKW8-2/K1	43-11050
	3m	SAL-12-RKW6-3/K1	43-11047	SAL-12-RKW8-3/K1	43-11051
	5m	SAL-12-RKW6-5/K1	43-11048	SAL-12-RKW8-5/K1	43-11052
	10m	SAL-12-RKW6-10/K1	43-11049	SAL-12-RKW8-10/K1	43-11053

For custom length or quality levels contact factory.

SAL M12x1 Connectors

Male connector, angled

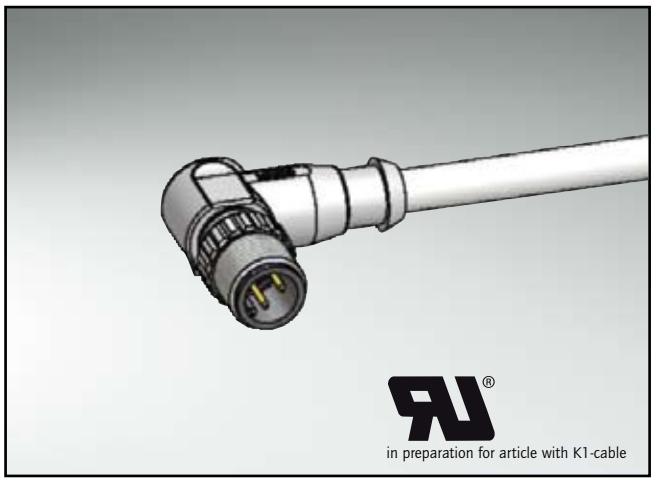

Technical Data

	3-pos	4-pos	5-pos
Rated voltage	250V	250V	60V
Current rating	4A at +40°C		
Pollution degree	3/2		
Insulation resistance	=$10^9\Omega$		
Degree of protection	IP67 in mated condition		
Temperature range	-30°C to +80°C		
Mating cycles	<=100		

Directive 2002 95 EC „RoHS" Compliant

Pin configuration

3-pos

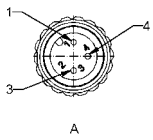

4-pos

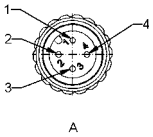

5-pos

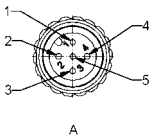

Contact assignment 3 - 5-pos

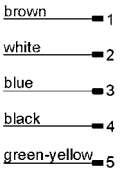

Dimension drawing

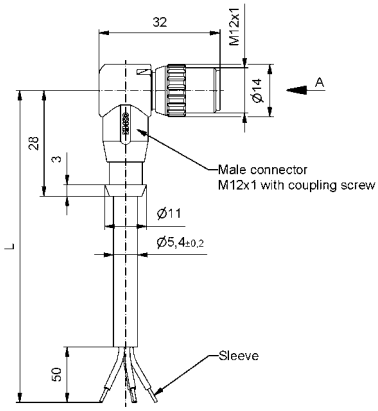

Order data

Cable	Length/L	Description	3-pos Part-no.	Description	4-pos Part-no.	Description	5-pos Part-no.
PVC, grey LiYY 0,34mm²	2m	SAL-12-RSW3-2/A1	43-10252	SAL-12-RSW4-2/A1	43-10272	SAL-12-RSW5-2/A1	43-10292
	3m	SAL-12-RSW3-3/A1	43-10253	SAL-12-RSW4-3/A1	43-10273	SAL-12-RSW5-3/A1	43-10293
	5m	SAL-12-RSW3-5/A1	43-10254	SAL-12-RSW4-5/A1	43-10274	SAL-12-RSW5-5/A1	43-10294
	10m	SAL-12-RSW3-10/A1	43-10255	SAL-12-RSW4-10/A1	43-10275	SAL-12-RSW5-10/A1	43-10295
TPU, high flexible halogenfree, UL black Li9Y11Y 0,34mm²	2m	SAL-12-RSW3-2/K1	43-10264	SAL-12-RSW4-2/K1	43-10284	SAL-12-RSW5-2/K1	43-10304
	3m	SAL-12-RSW3-3/K1	43-10265	SAL-12-RSW4-3/K1	43-10285	SAL-12-RSW5-3/K1	43-10305
	5m	SAL-12-RSW3-5/K1	43-10266	SAL-12-RSW4-5/K1	43-10286	SAL-12-RSW5-5/K1	43-10306
	10m	SAL-12-RSW3-10/K1	43-10267	SAL-12-RSW4-10/K1	43-10287	SAL-12-RSW5-10/K1	43-10307
TPU, irradiated halogenfree, UL orange Li9Y11X 0,34mm²	2m	SAL-12-RSW3-2/J1	43-10268	SAL-12-RSW4-2/J1	43-10288	SAL-12-RSW5-2/J1	43-10308
	3m	SAL-12-RSW3-3/J1	43-10269	SAL-12-RSW4-3/J1	43-10289	SAL-12-RSW5-3/J1	43-10309
	5m	SAL-12-RSW3-5/J1	43-10270	SAL-12-RSW4-5/J1	43-10290	SAL-12-RSW5-5/J1	43-10310
	10m	SAL-12-RSW3-10/J1	43-10271	SAL-12-RSW4-10/J1	43-10291	SAL-12-RSW5-10/J1	43-10311

For custom length or quality levels contact factory.

SAL M12X1 CONNECTORS

Male connector, angled

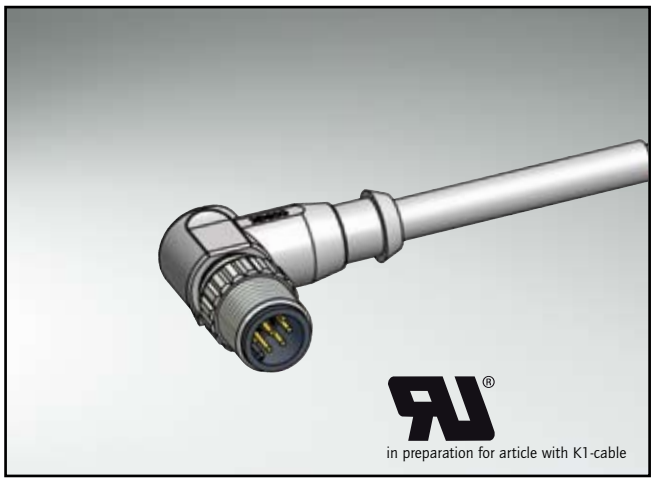

TECHNICAL DATA

	6-pos	8-pos
Rated voltage	30V	30V
Current rating	2A at +40°C	
Pollution degree	3/2	
Insulation resistance	=$10^9\Omega$	
Degree of protection	IP67 in mated condition	
Temperature range	-30°C to +80°C	
Mating cycles	<=100	

Directive 2002 95 EC „RoHS" Compliant

PIN CONFIGURATION

6-pos

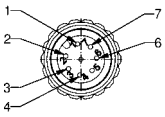

8-pos

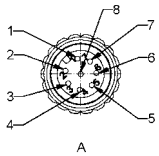

CONTACT ASSIGNMENT 6-POS

brown	1	n.c.	5
white	2	grey	6
blue	3	pink	7
black	4	n.c.	8

CONTACT ASSIGNMENT 8-POS

white	1	grey	5
brown	2	pink	6
green	3	blue	7
yellow	4	red	8

DIMENSION DRAWING

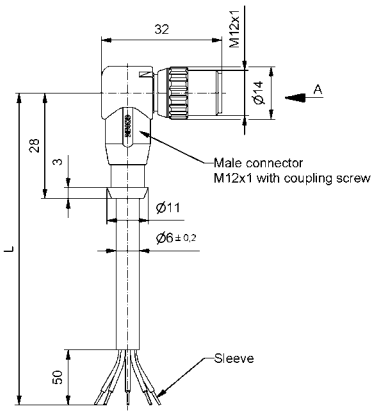

ORDER DATA

Cable	Length/L	Description	6-pos Part-no.	Description	8-pos Part-no.
PVC, grey LiYY 0,25mm²	2m	SAL-12-RSW6-2/A1	43-10312	SAL-12-RSW8-2/A1	43-10324
	3m	SAL-12-RSW6-3/A1	43-10313	SAL-12-RSW8-3/A1	43-10325
	5m	SAL-12-RSW6-5/A1	43-10314	SAL-12-RSW8-5/A1	43-10326
	10m	SAL-12-RSW6-10/A1	43-10315	SAL-12-RSW8-10/A1	43-10327
TPU, high flexible halogenfree, UL black Li9Y11Y 0,25mm²	2m	SAL-12-RSW6-2/K1	43-11042	SAL-12-RSW8-2/K1	43-11030
	3m	SAL-12-RSW6-3/K1	43-11043	SAL-12-RSW8-3/K1	43-11031
	5m	SAL-12-RSW6-5/K1	43-11044	SAL-12-RSW8-5/K1	43-11032
	10m	SAL-12-RSW6-10/K1	43-11045	SAL-12-RSW8-10/K1	43-11033

For custom length or quality levels contact factory.

SAL M12x1 Connectors

Female connector, angled with 2-Indicators LED-display

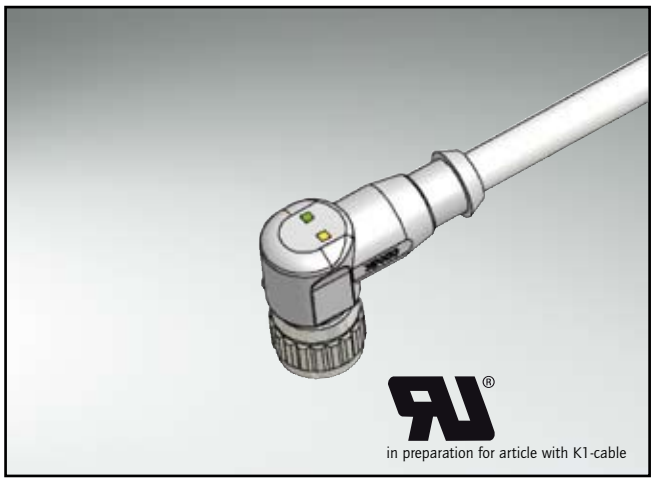

Technical Data

	3-pos	5-pos
Rated voltage	30V	30V
Current rating	4A at +40°C	
Pollution degree	3/2	
Insulation resistance	=$10^9\Omega$	
Degree of protection	IP67 in mated condition	
Temperature range	-30°C to +80°C	
Mating cycles	<=100	

Directive 2002 95 EC „RoHS" Compliant

Pin configuration

3-pos

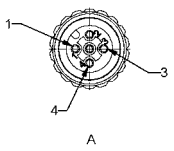

5-pos

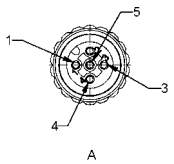

Contact assignment 3-pos

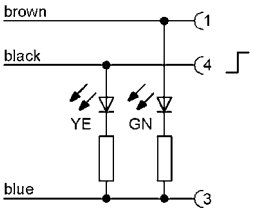

Contact assignment 5-pos

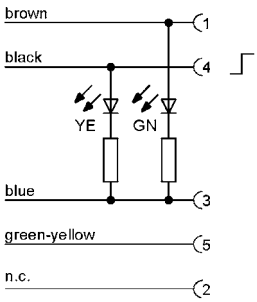

Dimension drawing

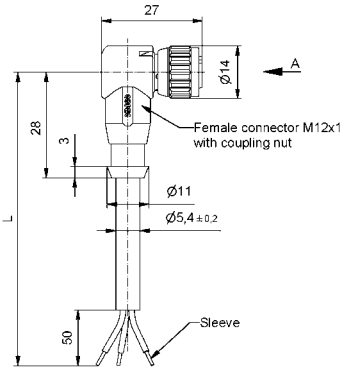

Order data

Cable	Length/L	Description	3-pos Part-no.	Description	5-pos Part-no.
PVC, grey LiYY 0,34mm²	2m	SAL-12-RKW3-2L-2/A1	43-10368	SAL-12-RKW5.2-2L-2/A1	43-10380
	3m	SAL-12-RKW3-2L-3/A1	43-10369	SAL-12-RKW5.2-2L-3/A1	43-10381
	5m	SAL-12-RKW3-2L-5/A1	43-10370	SAL-12-RKW5.2-2L-5/A1	43-10382
	10m	SAL-12-RKW3-2L-10/A1	43-10371	SAL-12-RKW5.2-2L-10/A1	43-10383
TPU, high flexible halogenfree, UL black Li9Y11Y 0,34mm²	2m	SAL-12-RKW3-2L-2/K1	43-10868	SAL-12-RKW5.2-2L-2/K1	43-10876
	3m	SAL-12-RKW3-2L-3/K1	43-10869	SAL-12-RKW5.2-2L-3/K1	43-10877
	5m	SAL-12-RKW3-2L-5/K1	43-10870	SAL-12-RKW5.2-2L-5/K1	43-10878
	10m	SAL-12-RKW3-2L-10/K1	43-10871	SAL-12-RKW5.2-2L-10/K1	43-10879
TPU, irradiated halogenfree, UL orange Li9Y11X 0,34mm²	2m	SAL-12-RKW3-2L-2/J1	43-10872	SAL-12-RKW5.2-2L-2/J1	43-10880
	3m	SAL-12-RKW3-2L-3/J1	43-10873	SAL-12-RKW5.2-2L-3/J1	43-10881
	5m	SAL-12-RKW3-2L-5/J1	43-10874	SAL-12-RKW5.2-2L-5/J1	43-10882
	10m	SAL-12-RKW3-2L-10/J1	43-10875	SAL-12-RKW5.2-2L-10/J1	43-10883

For custom length or quality levels contact factory.

SAL M12x1 Connectors

Female connector, angled with 3-Indicators LED-display

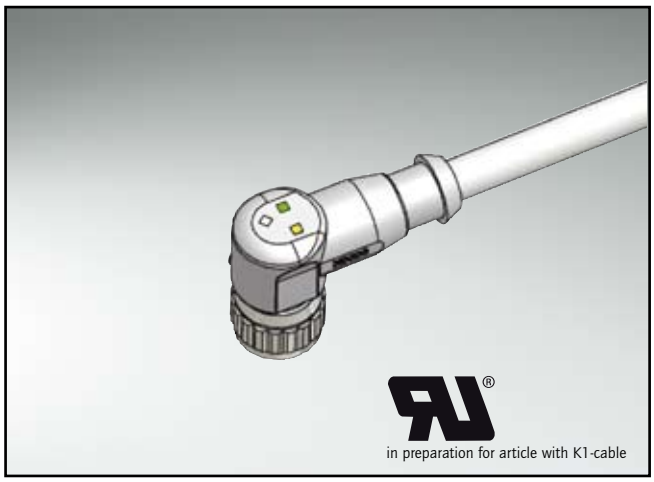

Technical Data

	4-pos	5-pos
Rated voltage	30V	30V
Current rating	4A at +40°C	
Pollution degree	3/2	
Insulation resistance	=$10^9\Omega$	
Degree of protection	IP67 in mated condition	
Temperature range	-30°C to +80°C	
Mating cycles	<=100	

Directive 2002 95 EC „RoHS" Compliant

Pin configuration

4-pos

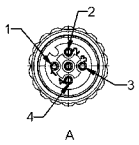

5-pos

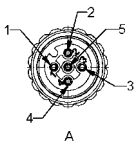

Contact assignment 4-pos

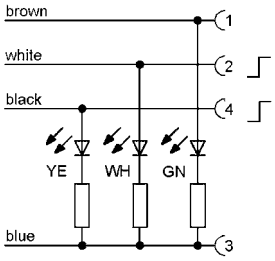

Contact assignment 5-pos

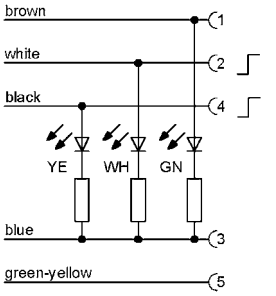

Dimension drawing

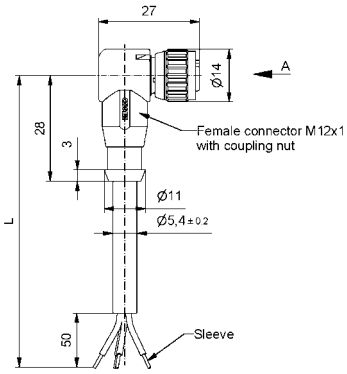

Order data

Cable	Length/L	Description	4-pos Part-no.	Description	5-pos Part-no.
PVC, grey LiYY 0,34mm²	2m	SAL-12-RKW4-3L-2/A1	43-10424	SAL-12-RKW5-3L-2/A1	43-10444
	3m	SAL-12-RKW4-3L-3/A1	43-10425	SAL-12-RKW5-3L-3/A1	43-10445
	5m	SAL-12-RKW4-3L-5/A1	43-10426	SAL-12-RKW5-3L-5/A1	43-10446
	10m	SAL-12-RKW4-3L-10/A1	43-10427	SAL-12-RKW5-3L-10/A1	43-10447
TPU, high flexible halogenfree, UL black Li9Y11Y 0,34mm²	2m	SAL-12-RKW4-3L-2/K1	43-10436	SAL-12-RKW5-3L-2/K1	43-10456
	3m	SAL-12-RKW4-3L-3/K1	43-10437	SAL-12-RKW5-3L-3/K1	43-10457
	5m	SAL-12-RKW4-3L-5/K1	43-10438	SAL-12-RKW5-3L-5/K1	43-10458
	10m	SAL-12-RKW4-3L-10/K1	43-10439	SAL-12-RKW5-3L-10/K1	43-10459
TPU, irradiated halogenfree, UL orange Li9Y11X 0,34mm²	2m	SAL-12-RKW4-3L-2/J1	43-10440	SAL-12-RKW5-3L-2/J1	43-10460
	3m	SAL-12-RKW4-3L-3/J1	43-10441	SAL-12-RKW5-3L-3/J1	43-10461
	5m	SAL-12-RKW4-3L-5/J1	43-10442	SAL-12-RKW5-3L-5/J1	43-10462
	10m	SAL-12-RKW4-3L-10/J1	43-10443	SAL-12-RKW5-3L-10/J1	43-10463

For custom length or quality levels contact factory.

SAL M12x1 Connectors

Female connector, axial with 360°-shielding

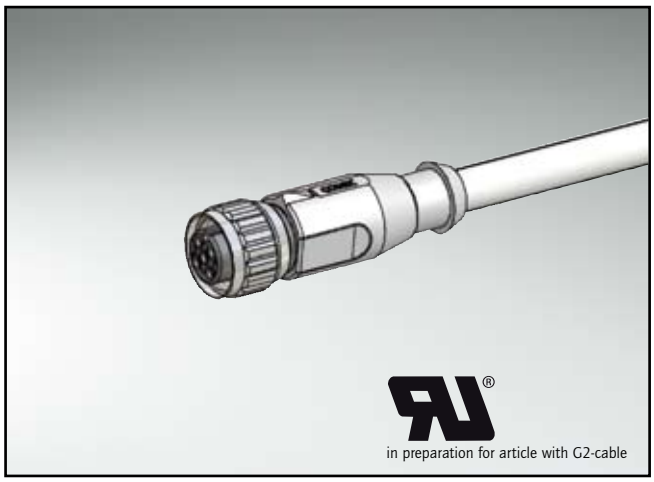

Technical Data

	4-pos	5-pos
Rated voltage	160V	60V
Current rating	4A at +40°C	
Pollution degree	3/2	
Insulation resistance	=$10^9\Omega$	
Degree of protection	IP67 in mated condition	
Temperature range	-30°C to +80°C	
Mating cycles	<=100	

Directive 2002 95 EC „RoHS" Compliant

Pin configuration

4-pos

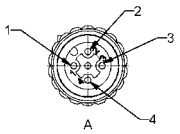

5-pos

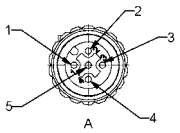

Contact assignment 4 - 5-pos

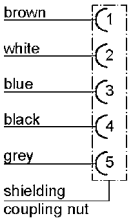

Dimension drawing

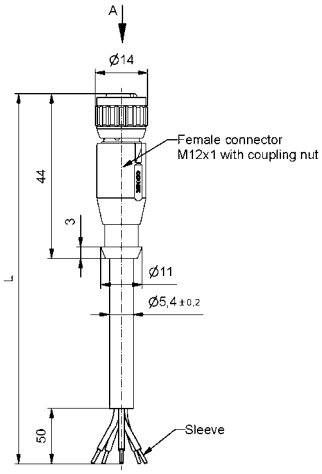

Order data

Cable	Length/L	Description	4-pos Part-no.	Description	5-pos Part-no.
PVC, UL grey at 4-pos LiYFCY 0,34mm² at 5-pos LiYFCY 0,25mm²	2m	SAL-12S-RK4-2/G3	43-10336	SAL-12S-RK5-2/G3	43-10344
	3m	SAL-12S-RK4-3/G3	43-10337	SAL-12S-RK5-3/G3	43-10345
	5m	SAL-12S-RK4-5/G3	43-10338	SAL-12S-RK5-5/G3	43-10346
	10m	SAL-12S-RK4-10/G3	43-10339	SAL-12S-RK5-10/G3	43-10347
TPU, high flexible halogenfree, UL black at 4-pos Li9YFC11Y 0,34mm² at 5-pos Li9YFC11Y 0,25mm²	2m	SAL-12S-RK4-2/G2	43-10340	SAL-12S-RK5-2/G2	43-10348
	3m	SAL-12S-RK4-3/G2	43-10341	SAL-12S-RK5-3/G2	43-10349
	5m	SAL-12S-RK4-5/G2	43-10342	SAL-12S-RK5-5/G2	43-10350
	10m	SAL-12S-RK4-10/G2	43-10343	SAL-12S-RK5-10/G2	43-10351

For custom length or quality levels contact factory.

SAL M12X1 CONNECTORS

Female connector, axial with 360°-shielding

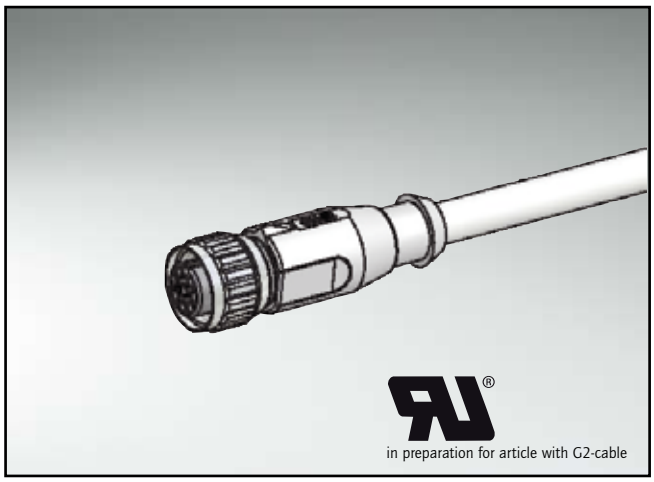

TECHNICAL DATA

	8-pos	12-pos
Rated voltage	30V	30V
Current rating	8-pos: 2A at +40°C 12-pos: 1,5A at +40°C	
Pollution degree	3/2	
Insulation resistance	=$10^9\Omega$	
Degree of protection	IP67 in mated condition	
Temperature range	-30°C to +80°C	
Mating cycles	<=100	

Directive 2002 95 EC „RoHS" Compliant

PIN CONFIGURATION

8-pos

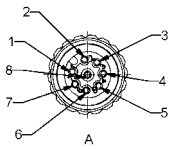

12-pos

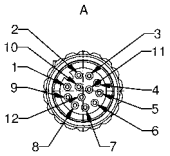

CONTACT ASSIGNMENT 8-POS

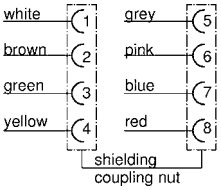

CONTACT ASSIGNMENT 12-POS

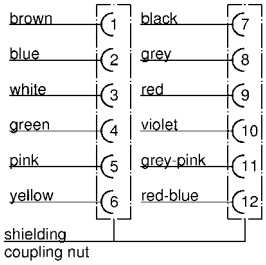

DIMENSION DRAWING

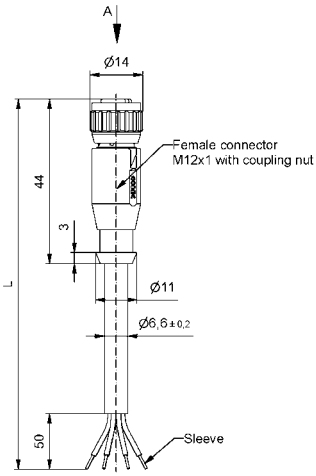

ORDER DATA

Cable	Length/L	Description	8-pos Part-no.	Description	12-pos Part-no.
PVC, UL grey at 8-pos LiYFCY 0,25mm² at 12-pos LiYFCY 0,14mm²	2m	SAL-12S-RK8-2/G3	43-10972	SAL-12S-RK12-2/G3	43-11280
	3m	SAL-12S-RK8-3/G3	43-10973	SAL-12S-RK12-3/G3	43-11281
	5m	SAL-12S-RK8-5/G3	43-10974	SAL-12S-RK12-5/G3	43-11282
	10m	SAL-12S-RK8-10/G3	43-10975	SAL-12S-RK12-10/G3	43-11283
TPU, high flexible halogenfree, UL black at 8-pos Li9YFC11Y 0,25mm² at 12-pos Li9YFC11Y 0,14mm²	2m	SAL-12S-RK8-2/G2	43-10976	SAL-12S-RK12-2/G2	43-11284
	3m	SAL-12S-RK8-3/G2	43-10977	SAL-12S-RK12-3/G2	43-11285
	5m	SAL-12S-RK8-5/G2	43-10978	SAL-12S-RK12-5/G2	43-11286
	10m	SAL-12S-RK8-10/G2	43-10979	SAL-12S-RK12-10/G2	43-11287

For custom length or quality levels contact factory.

SAL M12x1 Connectors

Male connector, axial with 360°-shielding

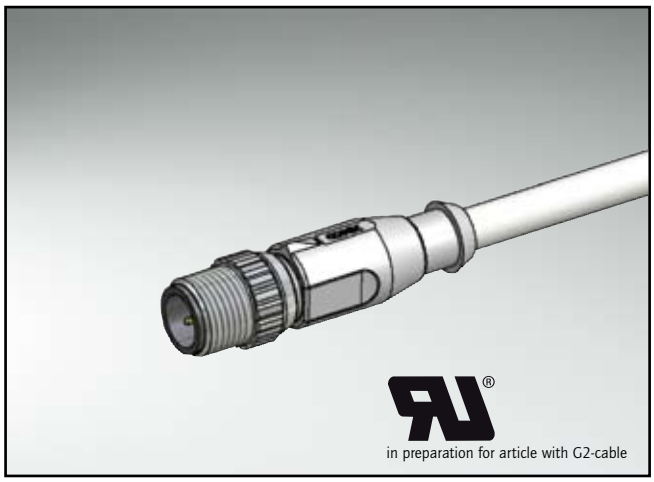

Technical Data

	4-pos	5-pos
Rated voltage	160V	60V
Current rating	4A at +40°C	
Pollution degree	3/2	
Insulation resistance	=$10^9\Omega$	
Degree of protection	IP67 in mated condition	
Temperature range	-30°C to +80°C	
Mating cycles	<=100	

Directive 2002 95 EC „RoHS" Compliant

Pin configuration

4-pos

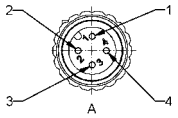

5-pos

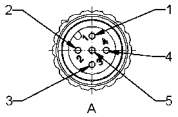

Contact assignment 4 - 5-pos

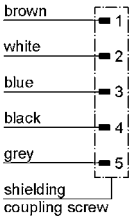

Dimension drawing

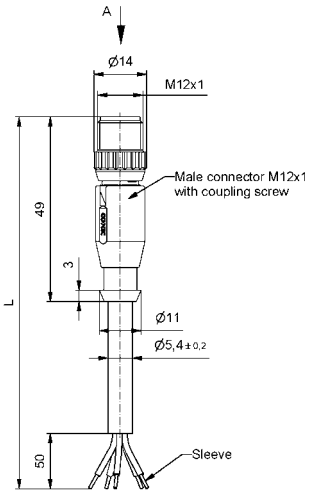

Order data

Cable	Length/L	Description	4-pos Part-no.	Description	5-pos Part-no.
PVC, UL grey at 4-pos LiYFCY 0,34mm² at 5-pos LiYFCY 0,25mm²	2m	SAL-12S-RS4-2/G3	43-10352	SAL-12S-RS5-2/G3	43-10360
	3m	SAL-12S-RS4-3/G3	43-10353	SAL-12S-RS5-3/G3	43-10361
	5m	SAL-12S-RS4-5/G3	43-10354	SAL-12S-RS5-5/G3	43-10362
	10m	SAL-12S-RS4-10/G3	43-10355	SAL-12S-RS5-10/G3	43-10363
TPU, high flexible halogenfree, UL black at 4-pos Li9YFC11Y 0,34mm² at 5-pos Li9YFC11Y 0,25mm²	2m	SAL-12S-RS4-2/G2	43-10356	SAL-12S-RS5-2/G2	43-10364
	3m	SAL-12S-RS4-3/G2	43-10357	SAL-12S-RS5-3/G2	43-10365
	5m	SAL-12S-RS4-5/G2	43-10358	SAL-12S-RS5-5/G2	43-10366
	10m	SAL-12S-RS4-10/G2	43-10359	SAL-12S-RS5-10/G2	43-10367

For custom length or quality levels contact factory.

SAL M12X1 CONNECTORS

Male connector, axial with 360°-shielding

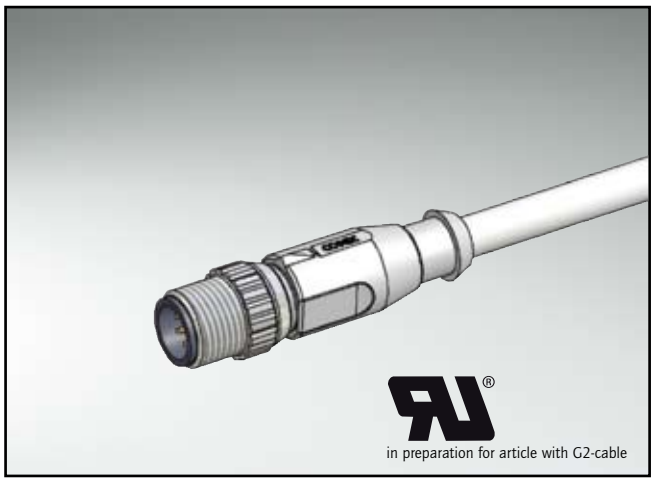

TECHNICAL DATA

	8-pos	12-pos
Rated voltage	30V	30V
Current rating	8-pos: 2A at +40°C 12-pos: 1,5A at +40°C	
Pollution degree	3/2	
Insulation resistance	$=10^9\Omega$	
Degree of protection	IP67 in mated condition	
Temperature range	-30°C to +80°C	
Mating cycles	<=100	

Directive 2002 95 EC „RoHS" Compliant

PIN CONFIGURATION

8-pos

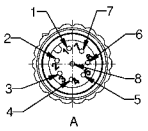

12-pos

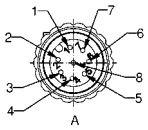

CONTACT ASSIGNMENT 8-POS

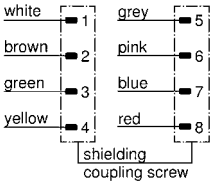

CONTACT ASSIGNMENT 12-POS

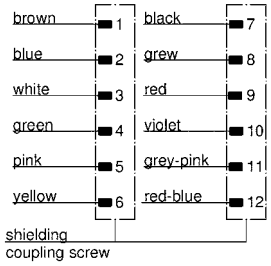

DIMENSION DRAWING

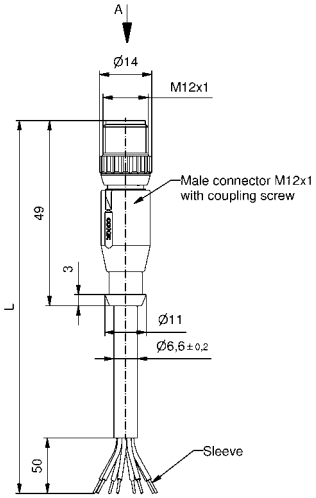

ORDER DATA

Cable	Length/L	Description	8-pos Part-no.	Description	12-pos Part-no.
PVC, UL grey at 8-pos LiYFCY 0,25mm² at 12-pos LiYFCY 0,14mm²	2m	SAL-12S-RS8-2/G3	43-10980	SAL-12S-RS12-2/G3	43-11288
	3m	SAL-12S-RS8-3/G3	43-10981	SAL-12S-RS12-3/G3	43-11289
	5m	SAL-12S-RS8-5/G3	43-10982	SAL-12S-RS12-5/G3	43-11290
	10m	SAL-12S-RS8-10/G3	43-10983	SAL-12S-RS12-10/G3	43-11291
TPU, high flexible halogenfree, UL black at 8-pos Li9YFC11Y 0,25mm² at 12-pos Li9YFC11Y 0,14mm²	2m	SAL-12S-RS8-2/G2	43-10984	SAL-12S-RS12-2/G2	43-11292
	3m	SAL-12S-RS8-3/G2	43-10985	SAL-12S-RS12-3/G2	43-11293
	5m	SAL-12S-RS8-5/G2	43-10986	SAL-12S-RS12-5/G2	43-11294
	10m	SAL-12S-RS8-10/G2	43-10987	SAL-12S-RS12-10/G2	43-11295

For custom length or quality levels contact factory.

SAL M12x1 Connectors

Connecting cable Female connector, axial – Male connector, axial

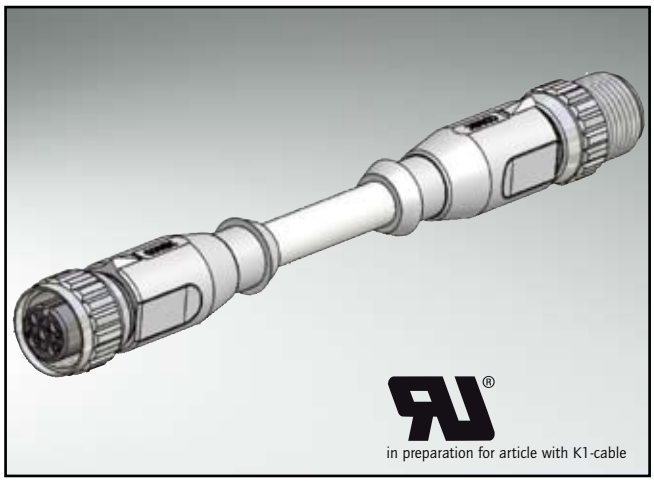

Technical Data

	3-pos	4-pos
Rated voltage	250V	250V
Current rating	4A at +40°C	
Pollution degree	3/2	
Insulation resistance	=$10^9\Omega$	
Degree of protection	IP67 in mated condition	
Temperature range	-30°C to +80°C	
Mating cycles	<=100	

Directive 2002 95 EC „RoHS" Compliant

Pin configuration

3-pos female

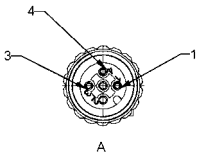

4-pos female

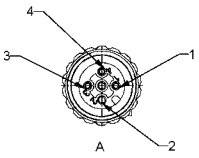

3-pos male

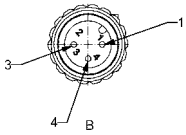

4-pos male

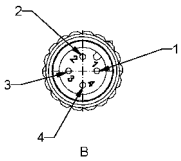

Contact assignment 3 - 4-pos

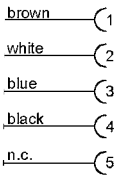

Dimension drawing

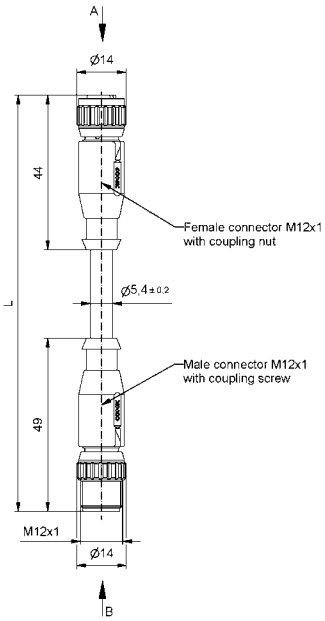

Order data

Cable	Length/L	Description	3-pos Part-no.	Description	4-pos Part-no.
PVC, grey LiYY 0,34mm²	0,3m	SAL-12-RK3-RS3-0,3/A1	43-10544	SAL-12-RK4-RS4-0,3/A1	43-10564
	0,6m	SAL-12-RK3-RS3-0,6/A1	43-10545	SAL-12-RK4-RS4-0,6/A1	43-10565
	1,5m	SAL-12-RK3-RS3-1,5/A1	43-10546	SAL-12-RK4-RS4-1,5/A1	43-10566
	3,0m	SAL-12-RK3-RS3-3/A1	43-10547	SAL-12-RK4-RS4-3/A1	43-10567
TPU, high flexible halogenfree, UL black Li9Y11Y 0,34mm²	0,3m	SAL-12-RK3-RS3-0,3/K1	43-10556	SAL-12-RK4-RS4-0,3/K1	43-10576
	0,6m	SAL-12-RK3-RS3-0,6/K1	43-10557	SAL-12-RK4-RS4-0,6/K1	43-10577
	1,5m	SAL-12-RK3-RS3-1,5/K1	43-10558	SAL-12-RK4-RS4-1,5/K1	43-10578
	3,0m	SAL-12-RK3-RS3-3/K1	43-10559	SAL-12-RK4-RS4-3/K1	43-10579
TPU, irradiated halogenfree, UL orange Li9Y11X 0,34mm²	0,3m	SAL-12-RK3-RS3-0,3/J1	43-10560	SAL-12-RK4-RS4-0,3/J1	43-10580
	0,6m	SAL-12-RK3-RS3-0,6/J1	43-10561	SAL-12-RK4-RS4-0,6/J1	43-10581
	1,5m	SAL-12-RK3-RS3-1,5/J1	43-10562	SAL-12-RK4-RS4-1,5/J1	43-10582
	3,0m	SAL-12-RK3-RS3-3/J1	43-10563	SAL-12-RK4-RS4-3/J1	43-10583

For custom length or quality levels contact factory.

SAL M12X1 CONNECTORS

Connecting cable Female connector, axial – Male connector, axial

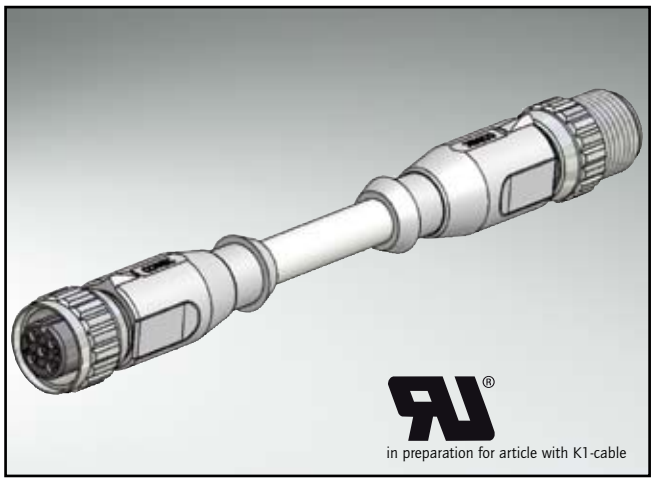

TECHNICAL DATA

	5-pos	6-pos
Rated voltage	60V	30V
Current rating	4A at +40°C	
Pollution degree	3/2	
Insulation resistance	=$10^9\Omega$	
Degree of protection	IP67 in mated condition	
Temperature range	-30°C to +80°C	
Mating cycles	<=100	

Directive 2002 95 EC „RoHS" Compliant

PIN CONFIGURATION

5-pos female

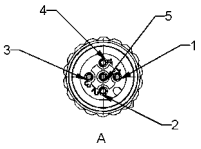

6-pos female

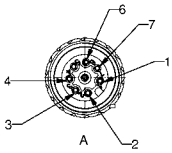

5-pos male

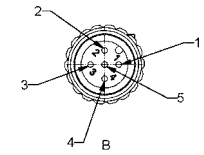

6-pos male

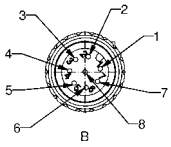

CONTACT ASSIGNMENT 5-POS

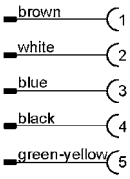

CONTACT ASSIGNMENT 6-POS

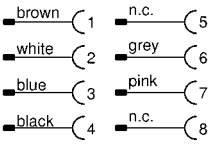

DIMENSION DRAWING

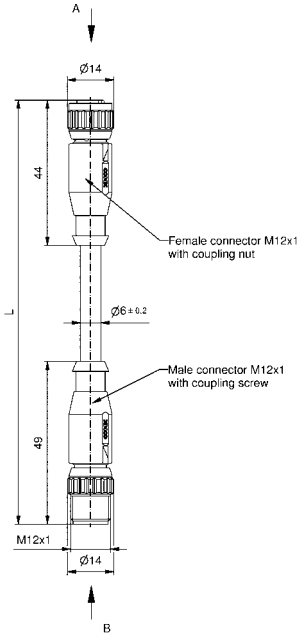

ORDER DATA

Cable	Length/L	Description	5-pos Part-no.	Description	6-pos Part-no.
PVC, grey at 5-pos LiYY 0,34mm² at 6-pos LiYY 0,25mm²	0,3m	SAL-12-RK5-RS5-0,3/A1	43-10584	SAL-12-RK6-RS6-0,3/A1	43-11070
	0,6m	SAL-12-RK5-RS5-0,6/A1	43-10585	SAL-12-RK6-RS6-0,6/A1	43-11071
	1,5m	SAL-12-RK5-RS5-1,5/A1	43-10586	SAL-12-RK6-RS6-1,5/A1	43-11072
	3,0m	SAL-12-RK5-RS5-3/A1	43-10587	SAL-12-RK6-RS6-3/A1	43-11073
TPU, high flexible halogenfree, UL black at 5-pos Li9Y11Y 0,34mm² at 6-pos Li9Y11Y 0,25mm²	0,3m	SAL-12-RK5-RS5-0,3/K1	43-10672	SAL-12-RK6-RS6-0,3/K1	43-11078
	0,6m	SAL-12-RK5-RS5-0,6/K1	43-10673	SAL-12-RK6-RS6-0,6/K1	43-11079
	1,5m	SAL-12-RK5-RS5-1,5/K1	43-10674	SAL-12-RK6-RS6-1,5/K1	43-11080
	3,0m	SAL-12-RK5-RS5-3/K1	43-10675	SAL-12-RK6-RS6-3/K1	43-11081
TPU, irradiated halogenfree, UL orange Li9Y11X 0,34mm²	0,3m	SAL-12-RK5-RS5-0,3/J1	43-10676		
	0,6m	SAL-12-RK5-RS5-0,6/J1	43-10677		
	1,5m	SAL-12-RK5-RS5-1,5/J1	43-10678		
	3,0m	SAL-12-RK5-RS5-3/J1	43-10679		

For custom length or quality levels contact factory.

SAL M12x1 Connectors

Connecting cable Female connector, axial – Male connector, axial

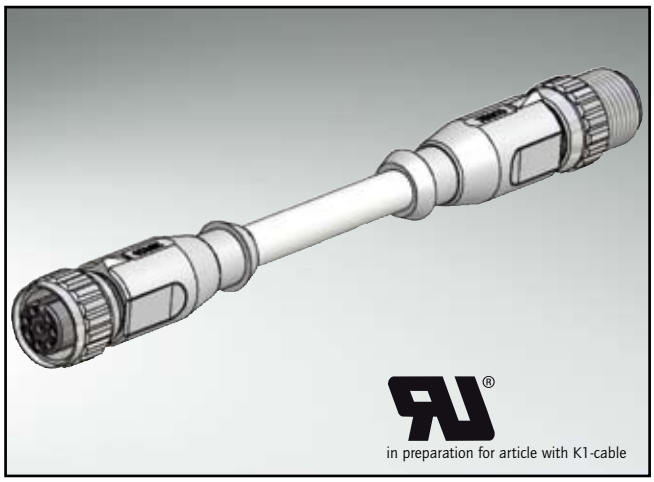

Technical Data

Rated voltage	8-pos / 30V
Current rating	2A at +40°C
Pollution degree	3/2
Insulation resistance	=$10^9\Omega$
Degree of protection	IP67 in mated condition
Temperature range	-30°C to +80°C
Mating cycles	<=100

Directive 2002 95 EC „RoHS" Compliant

Pin configuration

8-pos female

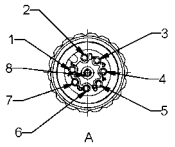

8-pos male

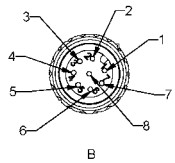

Contact assignment 8-pos

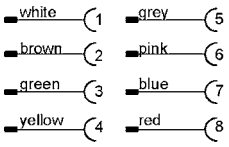

Dimension drawing

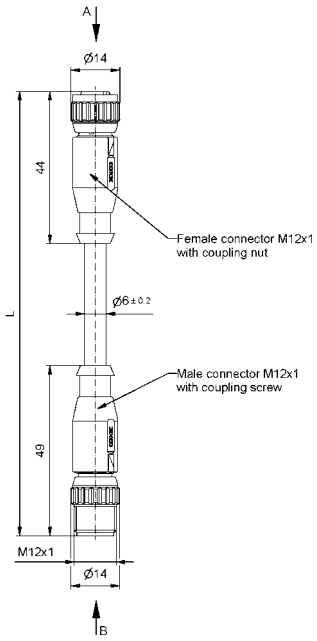

Order data

Cable	Length/L	Description	8-pos Part-no.
PVC, grey LiYY 0,25mm²	0,3m	SAL-12-RK8-RS8-0,3/A1	43-10596
	0,6m	SAL-12-RK8-RS8-0,6/A1	43-10597
	1,5m	SAL-12-RK8-RS8-1,5/A1	43-10598
	3,0m	SAL-12-RK8-RS8-3/A1	43-10599
TPU, high flexible halogenfree, UL black Li9Y11Y 0,25mm²	0,3m	SAL-12-RK8-RS8-0,3/K1	43-11054
	0,6m	SAL-12-RK8-RS8-0,6/K1	43-11055
	1,5m	SAL-12-RK8-RS8-1,5/K1	43-11056
	3,0m	SAL-12-RK8-RS8-3/K1	43-11057

For custom length or quality levels contact factory.

SAL M12X1 CONNECTORS

Connecting cable Female connector, axial – Male connector, angled

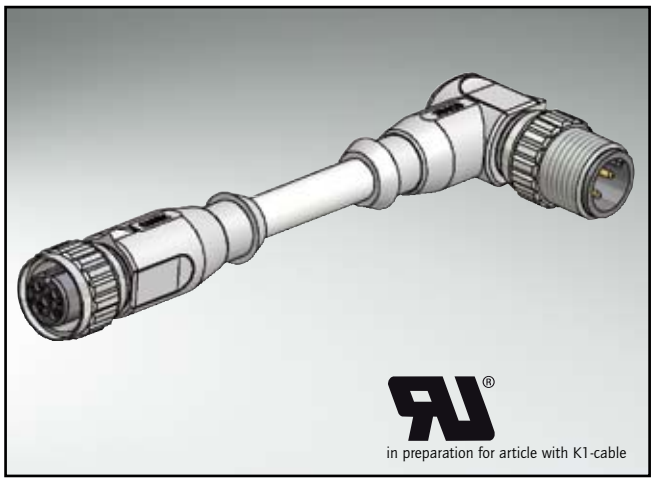

TECHNICAL DATA

Rated voltage	3-pos	4-pos
	250V	250V
Current rating	4A at +40°C	
Pollution degree	3/2	
Insulation resistance	=$10^9\Omega$	
Degree of protection	IP67 in mated condition	
Temperature range	-30°C to +80°C	
Mating cycles	<=100	

Directive 2002 95 EC „RoHS" Compliant

PIN CONFIGURATION

3-pos female

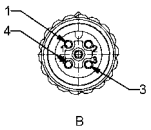

4-pos female

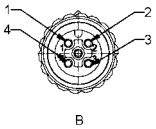

3-pos male

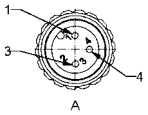

4-pos male

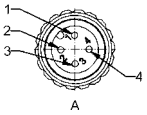

CONTACT ASSIGNMENT 3 - 4-POS

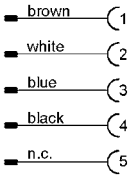

DIMENSION DRAWING

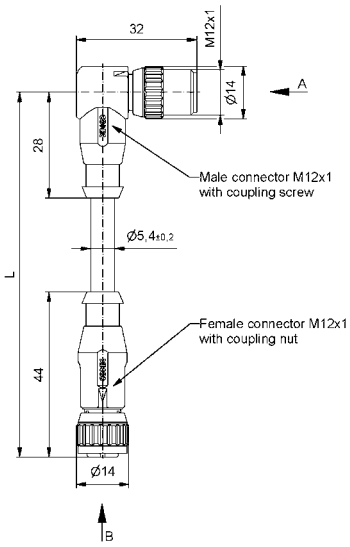

ORDER DATA

Cable	Length/L	Description	3-pos Part-no.	Description	4-pos Part-no.
PVC, grey LiYY 0,34mm²	0,3m	SAL-12-RK3-RSW3-0,3/A1	43-10608	SAL-12-RK4-RSW4-0,3/A1	43-10628
	0,6m	SAL-12-RK3-RSW3-0,6/A1	43-10609	SAL-12-RK4-RSW4-0,6/A1	43-10629
	1,5m	SAL-12-RK3-RSW3-1,5/A1	43-10610	SAL-12-RK4-RSW4-1,5/A1	43-10630
	3,0m	SAL-12-RK3-RSW3-3/A1	43-10611	SAL-12-RK4-RSW4-3/A1	43-10631
TPU, high flexible halogenfree, UL black Li9Y11Y 0,34mm²	0,3m	SAL-12-RK3-RSW3-0,3/K1	43-10620	SAL-12-RK4-RSW4-0,3/K1	43-10640
	0,6m	SAL-12-RK3-RSW3-0,6/K1	43-10621	SAL-12-RK4-RSW4-0,6/K1	43-10641
	1,5m	SAL-12-RK3-RSW3-1,5/K1	43-10622	SAL-12-RK4-RSW4-1,5/K1	43-10642
	3,0m	SAL-12-RK3-RSW3-3/K1	43-10623	SAL-12-RK4-RSW4-3/K1	43-10643
TPU, irradiated halogenfree, UL orange Li9Y11X 0,34mm²	0,3m	SAL-12-RK3-RSW3-0,3/J1	43-10624	SAL-12-RK4-RSW4-0,3/J1	43-10644
	0,6m	SAL-12-RK3-RSW3-0,6/J1	43-10625	SAL-12-RK4-RSW4-0,6/J1	43-10645
	1,5m	SAL-12-RK3-RSW3-1,5/J1	43-10626	SAL-12-RK4-RSW4-1,5/J1	43-10646
	3,0m	SAL-12-RK3-RSW3-3/J1	43-10627	SAL-12-RK4-RSW4-3/J1	43-10647

For custom length or quality levels contact factory.

SAL M12x1 Connectors

Connecting cable Female connector, axial – Male connector, angled

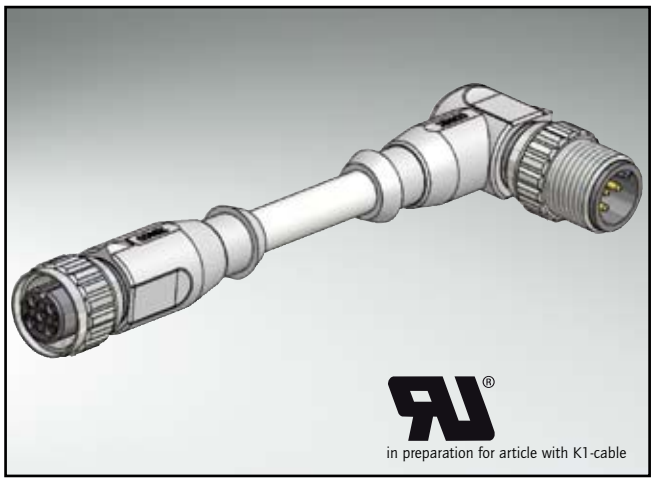

Technical Data

	5-pos	6-pos
Rated voltage	60V	30V
Current rating	5-pos: 4A at +40°C 6-pos: 2A at +40°C	
Pollution degree	3/2	
Insulation resistance	=$10^9\Omega$	
Degree of protection	IP67 in mated condition	
Temperature range	-30°C to +80°C	
Mating cycles	<=100	

Directive 2002 95 EC „RoHS" Compliant

Pin configuration

5-pos female

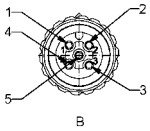

6-pos female

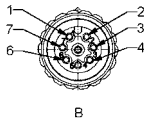

5-pos male

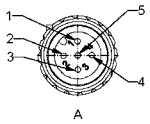

6-pos male

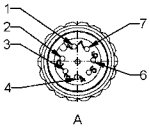

Contact assignment 5-pos

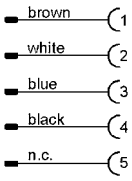

Contact assignment 6-pos

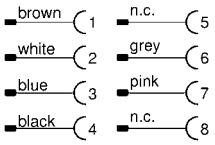

Dimension drawing

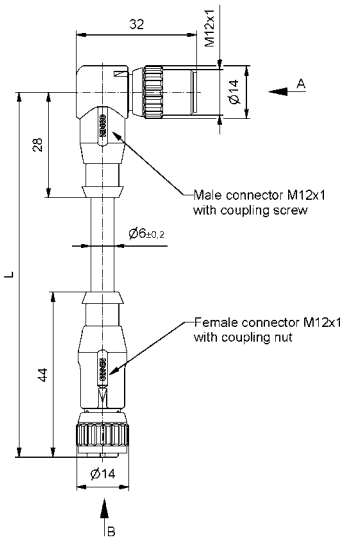

Order data

Cable	Length/L	Description	5-pos Part-no.	Description	6-pos Part-no.
PVC, grey at 5-pos LiYY 0,34mm² at 6-pos LiYY 0,25mm²	0,3m	SAL-12-RK5-RSW5-0,3/A1	43-10648	SAL-12-RK6-RSW6-0,3/A1	43-11090
	0,6m	SAL-12-RK5-RSW5-0,6/A1	43-10649	SAL-12-RK6-RSW6-0,6/A1	43-11091
	1,5m	SAL-12-RK5-RSW5-1,5/A1	43-10650	SAL-12-RK6-RSW6-1,5/A1	43-11092
	3,0m	SAL-12-RK5-RSW5-3/A1	43-10651	SAL-12-RK6-RSW6-3/A1	43-11093
TPU, high flexible halogenfree, UL black at 5-pos Li9Y11Y 0,34mm² at 6-pos Li9Y11Y 0,25mm²	0,3m	SAL-12-RK5-RSW5-0,3/K1	43-10680	SAL-12-RK6-RSW6-0,3/K1	43-11094
	0,6m	SAL-12-RK5-RSW5-0,6/K1	43-10681	SAL-12-RK6-RSW6-0,6/K1	43-11095
	1,5m	SAL-12-RK5-RSW5-1,5/K1	43-10682	SAL-12-RK6-RSW6-1,5/K1	43-11096
	3,0m	SAL-12-RK5-RSW5-3/K1	43-10683	SAL-12-RK6-RSW6-3/K1	43-11097
TPU, irradiated halogenfree, UL orange Li9Y11X 0,34mm²	0,3m	SAL-12-RK5-RSW5-0,3/J1	43-10684		
	0,6m	SAL-12-RK5-RSW5-0,6/J1	43-10685		
	1,5m	SAL-12-RK5-RSW5-1,5/J1	43-10686		
	3,0m	SAL-12-RK5-RSW5-3/J1	43-10687		

For custom length or quality levels contact factory.

SAL M12X1 CONNECTORS

Connecting cable Female connector, axial – Male connector, angled

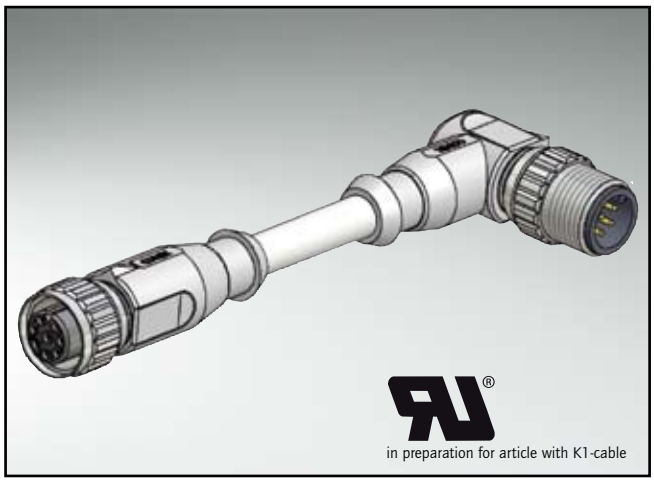

TECHNICAL DATA

Rated voltage	8-pos 30V
Current rating	2A at +40°C
Pollution degree	3/2
Insulation resistance	=$10^9\Omega$
Degree of protection	IP67 in mated condition
Temperature range	-30°C to +80°C
Mating cycles	<=100

Directive 2002 95 EC „RoHS" Compliant

PIN CONFIGURATION

8-pos female

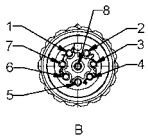

8-pos male

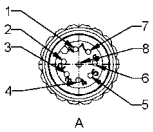

CONTACT ASSIGNMENT 8-POS

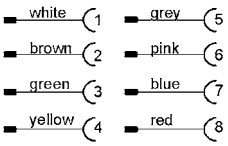

DIMENSION DRAWING

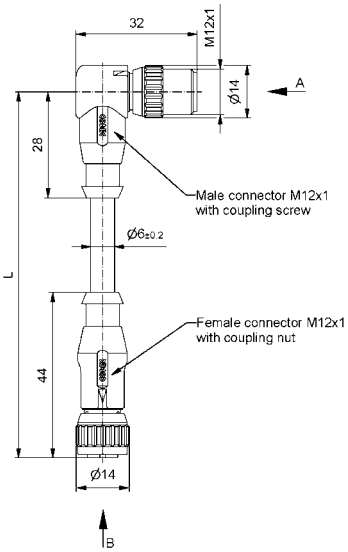

ORDER DATA

Cable	Length/L	Description	8-pos Part-no.
PVC, grey LiYY 0,25mm²	0,3m	SAL-12-RK8-RSW8-0,3/A1	43-10660
	0,6m	SAL-12-RK8-RSW8-0,6/A1	43-10661
	1,5m	SAL-12-RK8-RSW8-1,5/A1	43-10662
	3,0m	SAL-12-RK8-RSW8-3/A1	43-10663
TPU, high flexible halogenfree, UL black Li9Y11Y 0,25mm²	0,3m	SAL-12-RK8-RSW8-0,3/K1	43-11066
	0,6m	SAL-12-RK8-RSW8-0,6/K1	43-11067
	1,5m	SAL-12-RK8-RSW8-1,5/K1	43-11068
	3,0m	SAL-12-RK8-RSW8-3/K1	43-11069

For custom length or quality levels contact factory.

SAL M12x1 Connectors

Connecting cable Female connector, angled – Male connector, axial

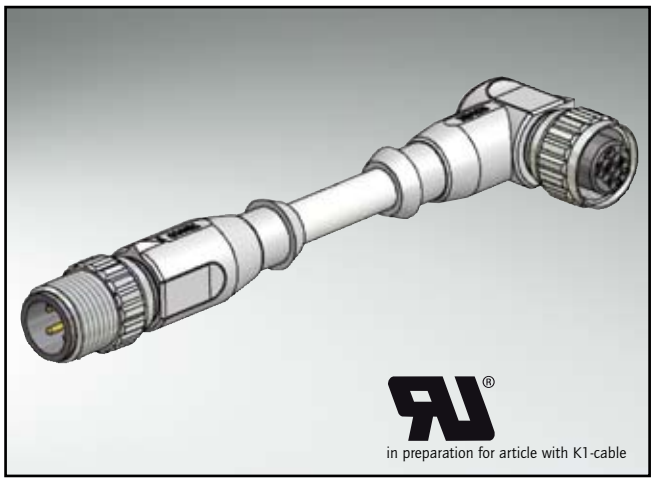

Technical Data

	3-pos	4-pos
Rated voltage	250V	250V
Current rating	4A at +40°C	
Pollution degree	3/2	
Insulation resistance	=$10^9\Omega$	
Degree of protection	IP67 in mated condition	
Temperature range	-30°C to +80°C	
Mating cycles	<=100	

Directive 2002 95 EC „RoHS" Compliant

Pin configuration

3-pos female

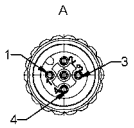

4-pos female

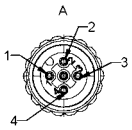

3-pos male

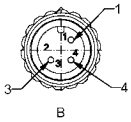

4-pos male

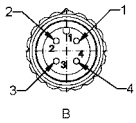

Contact assignment 3 - 4-pos

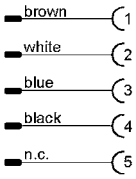

Dimension drawing

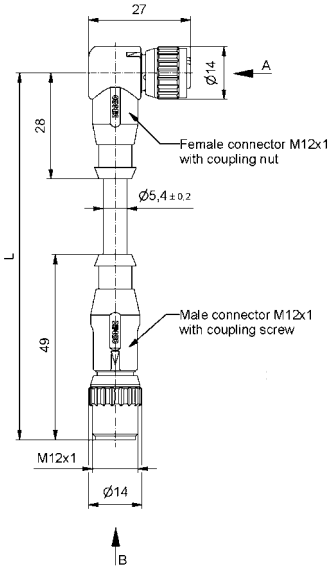

Order data

Cable	Length/L	Description	3-pos Part-no.	Description	4-pos Part-no.
PVC, grey LiYY 0,34mm²	0,3m	SAL-12-RKW3-RS3-0,3/A1	43-10688	SAL-12-RKW4-RS4-0,3/A1	43-10708
	0,6m	SAL-12-RKW3-RS3-0,6/A1	43-10689	SAL-12-RKW4-RS4-0,6/A1	43-10709
	1,5m	SAL-12-RKW3-RS3-1,5/A1	43-10690	SAL-12-RKW4-RS4-1,5/A1	43-10710
	3,0m	SAL-12-RKW3-RS3-3/A1	43-10691	SAL-12-RKW4-RS4-3/A1	43-10711
TPU, high flexible halogenfree, UL black Li9Y11Y 0,34mm²	0,3m	SAL-12-RKW3-RS3-0,3/K1	43-10700	SAL-12-RKW4-RS4-0,3/K1	43-10720
	0,6m	SAL-12-RKW3-RS3-0,6/K1	43-10701	SAL-12-RKW4-RS4-0,6/K1	43-10721
	1,5m	SAL-12-RKW3-RS3-1,5/K1	43-10702	SAL-12-RKW4-RS4-1,5/K1	43-10722
	3,0m	SAL-12-RKW3-RS3-3/K1	43-10703	SAL-12-RKW4-RS4-3/K1	43-10723
TPU, irradiated halogenfree, UL orange Li9Y11X 0,34mm²	0,3m	SAL-12-RKW3-RS3-0,3/J1	43-10704	SAL-12-RKW4-RS4-0,3/J1	43-10724
	0,6m	SAL-12-RKW3-RS3-0,6/J1	43-10705	SAL-12-RKW4-RS4-0,6/J1	43-10725
	1,5m	SAL-12-RKW3-RS3-1,5/J1	43-10706	SAL-12-RKW4-RS4-1,5/J1	43-10726
	3,0m	SAL-12-RKW3-RS3-3/J1	43-10707	SAL-12-RKW4-RS4-3/J1	43-10727

For custom length or quality levels contact factory.

SAL M12X1 CONNECTORS

Connecting cable Female connector, angled – Male connector, axial

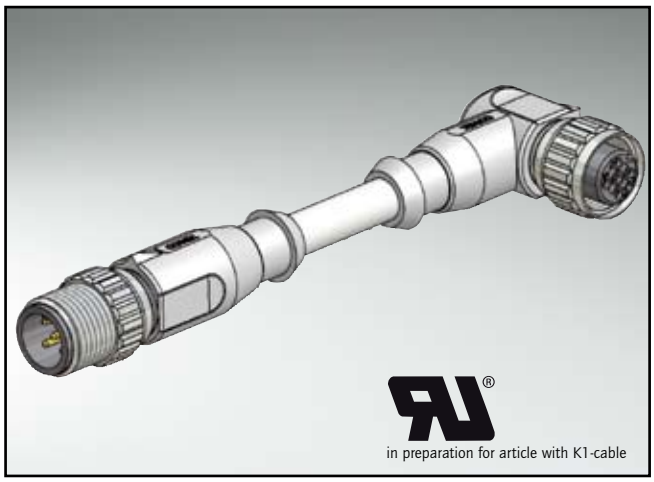

TECHNICAL DATA

Rated voltage	5-pos	6-pos
	60V	30V
Current rating	5-pos: 4A at +40°C 6-pos: 2A at +40°C	
Pollution degree	3/2	
Insulation resistance	=$10^9\Omega$	
Degree of protection	IP67 in mated condition	
Temperature range	-30°C to +80°C	
Mating cycles	<=100	

Directive 2002 95 EC „RoHS" Compliant

PIN CONFIGURATION

5-pos female

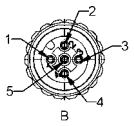

6-pos female

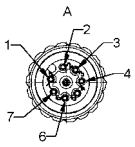

5-pos male

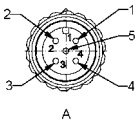

6-pos male

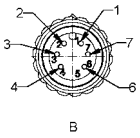

CONTACT ASSIGNMENT 5-POS

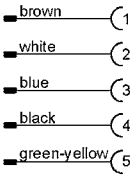

CONTACT ASSIGNMENT 6-POS

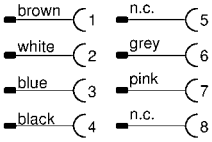

DIMENSION DRAWING

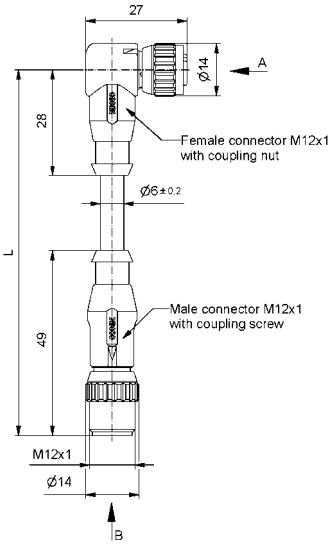

ORDER DATA

Cable	Length/L	Description	5-pos Part-no.	Description	6-pos Part-no.
PVC, grey at 5-pos LiYY 0,34mm² at 6-pos LiYY 0,25mm²	0,3m	SAL-12-RKW5-RS5-0,3/A1	43-10952	SAL-12-RKW6-RS6-0,3/A1	43-11082
	0,6m	SAL-12-RKW5-RS5-0,6/A1	43-10953	SAL-12-RKW6-RS6-0,6/A1	43-11083
	1,5m	SAL-12-RKW5-RS5-1,5/A1	43-10954	SAL-12-RKW6-RS6-1,5/A1	43-11084
	3,0m	SAL-12-RKW5-RS5-3/A1	43-10955	SAL-12-RKW6-RS6-3/A1	43-11085
TPU, high flexible halogenfree, UL black at 5-pos Li9Y11Y 0,34mm² at 6-pos Li9Y11Y 0,25mm²	0,3m	SAL-12-RKW5-RS5-0,3/K1	43-10964	SAL-12-RKW6-RS6-0,3/K1	43-11086
	0,6m	SAL-12-RKW5-RS5-0,6/K1	43-10965	SAL-12-RKW6-RS6-0,6/K1	43-11087
	1,5m	SAL-12-RKW5-RS5-1,5/K1	43-10966	SAL-12-RKW6-RS6-1,5/K1	43-11088
	3,0m	SAL-12-RKW5-RS5-3/K1	43-10967	SAL-12-RKW6-RS6-3/K1	43-11089
TPU, irradiated halogenfree, UL orange Li9Y11X 0,34mm²	0,3m	SAL-12-RKW5-RS5-0,3/J1	43-10968		
	0,6m	SAL-12-RKW5-RS5-0,6/J1	43-10969		
	1,5m	SAL-12-RKW5-RS5-1,5/J1	43-10970		
	3,0m	SAL-12-RKW5-RS5-3/J1	43-10971		

For custom length or quality levels contact factory.

SAL M12x1 Connectors

Connecting cable Female connector, angled – Male connector, axial

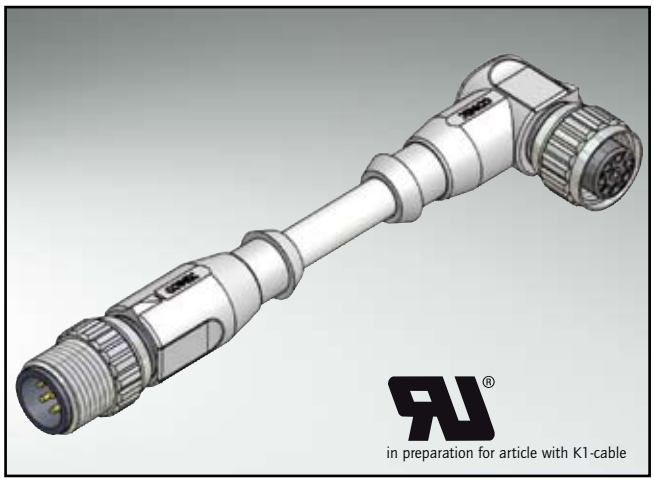

Technical Data

Rated voltage	8-pos 30V
Current rating	2A at +40°C
Pollution degree	3/2
Insulation resistance	=$10^9\Omega$
Degree of protection	IP67 in mated condition
Temperature range	-30°C to +80°C
Mating cycles	<=100

Directive 2002 95 EC
„RoHS"
Compliant

Pin configuration

8-pos female

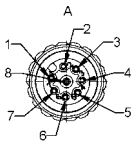

8-pos male

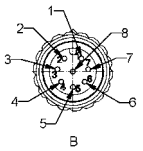

Contact assignment 8-pos

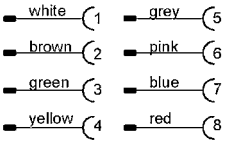

Dimension drawing

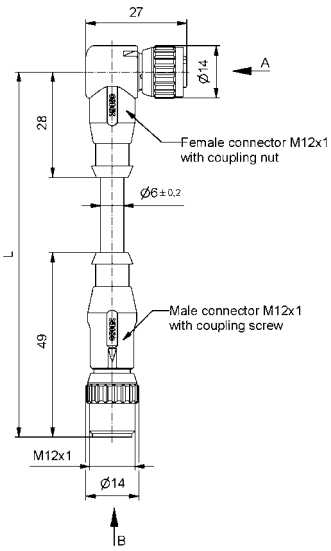

Order data

Cable	Length/L	Description	8-pos Part-no.
PVC, grey LiYY 0,25mm²	0,3m	SAL-12-RKW8-RS8-0,3/A1	43-10728
	0,6m	SAL-12-RKW8-RS8-0,6/A1	43-10729
	1,5m	SAL-12-RKW8-RS8-1,5/A1	43-10730
	3,0m	SAL-12-RKW8-RS8-3/A1	43-10731
TPU, high flexible halogenfree, UL black Li9Y11Y 0,25mm²	0,3m	SAL-12-RKW8-RS8-0,3/K1	43-11106
	0,6m	SAL-12-RKW8-RS8-0,6/K1	43-11107
	1,5m	SAL-12-RKW8-RS8-1,5/K1	43-11108
	3,0m	SAL-12-RKW8-RS8-3/K1	43-11109

For custom length or quality levels contact factory.

SAL M12X1 CONNECTORS

Connecting cable Female connector, angled – Male connector, angled

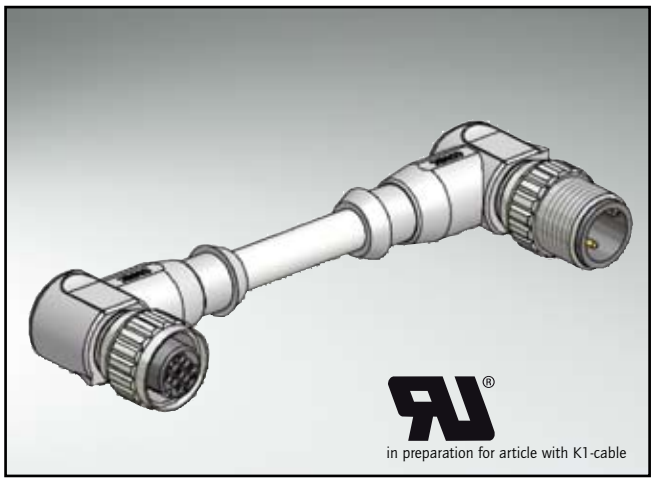

TECHNICAL DATA

	3-pos	4-pos
Rated voltage	250V	250V
Current rating	4A at +40°C	
Pollution degree	3/2	
Insulation resistance	=$10^9\Omega$	
Degree of protection	IP67 in mated condition	
Temperature range	-30°C to +80°C	
Mating cycles	<=100	

Directive 2002 95 EC „RoHS" Compliant

PIN CONFIGURATION

3-pos female

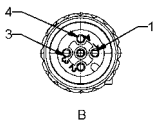

4-pos female

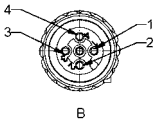

3-pos male

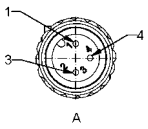

4-pos male

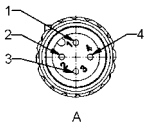

CONTACT ASSIGNMENT 3 - 4-POS

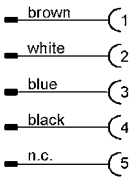

DIMENSION DRAWING

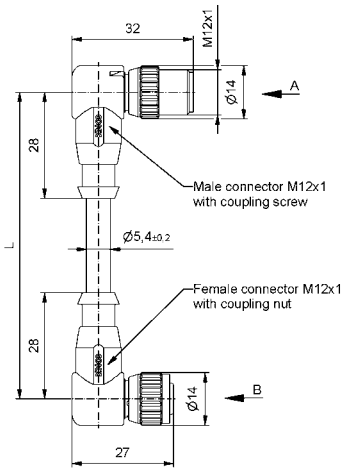

ORDER DATA

Cable	Length/L	Description	3-pos Part-no.	Description	4-pos Part-no.
PVC, grey LiYY 0,34mm²	0,3m	SAL-12-RKW3-RSW3-0,3/A1	43-10740	SAL-12-RKW4-RSW4-0,3/A1	43-10760
	0,6m	SAL-12-RKW3-RSW3-0,6/A1	43-10741	SAL-12-RKW4-RSW4-0,6/A1	43-10761
	1,5m	SAL-12-RKW3-RSW3-1,5/A1	43-10742	SAL-12-RKW4-RSW4-1,5/A1	43-10762
	3,0m	SAL-12-RKW3-RSW3-3/A1	43-10743	SAL-12-RKW4-RSW4-3/A1	43-10763
TPU, high flexible halogenfree, UL black Li9Y11Y 0,34mm²	0,3m	SAL-12-RKW3-RSW3-0,3/K1	43-10752	SAL-12-RKW4-RSW4-0,3/K1	43-10772
	0,6m	SAL-12-RKW3-RSW3-0,6/K1	43-10753	SAL-12-RKW4-RSW4-0,6/K1	43-10773
	1,5m	SAL-12-RKW3-RSW3-1,5/K1	43-10754	SAL-12-RKW4-RSW4-1,5/K1	43-10774
	3,0m	SAL-12-RKW3-RSW3-3/K1	43-10755	SAL-12-RKW4-RSW4-3/K1	43-10775
TPU, irradiated halogenfree, UL orange Li9Y11X 0,34mm²	0,3m	SAL-12-RKW3-RSW3-0,3/J1	43-10756	SAL-12-RKW4-RSW4-0,3/J1	43-10776
	0,6m	SAL-12-RKW3-RSW3-0,6/J1	43-10757	SAL-12-RKW4-RSW4-0,6/J1	43-10777
	1,5m	SAL-12-RKW3-RSW3-1,5/J1	43-10758	SAL-12-RKW4-RSW4-1,5/J1	43-10778
	3,0m	SAL-12-RKW3-RSW3-3/J1	43-10759	SAL-12-RKW4-RSW4-3/J1	43-10779

For custom length or quality levels contact factory.

SAL M12x1 Connectors

Connecting cable Female connector, angled – Male connector, angled

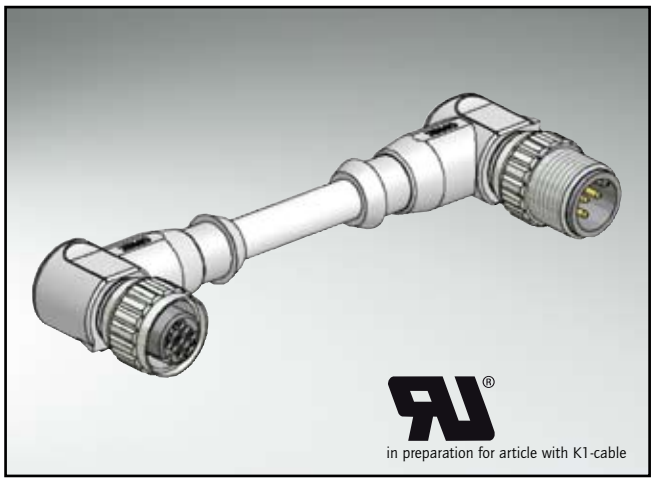

Technical Data

Rated voltage	5-pos	6-pos
	60V	30V
Current rating	5-pos: 4A at +40°C 6-pos: 2A at +40°C	
Pollution degree	3/2	
Insulation resistance	=$10^9\Omega$	
Degree of protection	IP67 in mated condition	
Temperature range	-30°C to +80°C	
Mating cycles	<=100	

Directive 2002 95 EC „RoHS" Compliant

Pin configuration

5-pos female

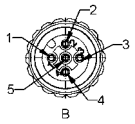

6-pos female

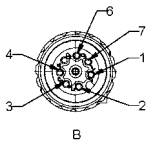

5-pos male

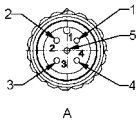

6-pos male

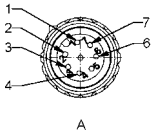

Contact assignment 5-pos

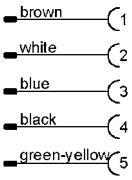

Contact assignment 6-pos

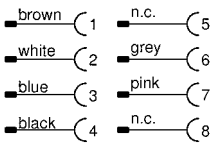

Dimension drawing

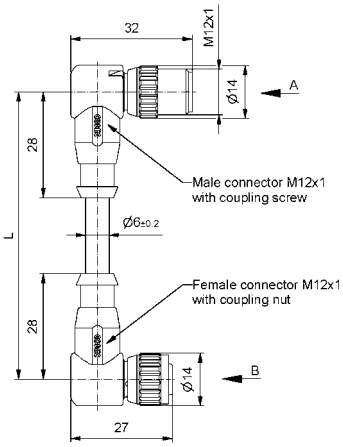

Order data

Cable	Length/L	Description	5-pos Part-no.	Description	6-pos Part-no.
PVC, grey at 5-pos LiYY 0,34mm² at 6-pos LiYY 0,25mm²	0,3m	SAL-12-RKW5-RSW5-0,3/A1	43-10780	SAL-12-RKW6-RSW6-0,3/A1	43-11098
	0,6m	SAL-12-RKW5-RSW5-0,6/A1	43-10781	SAL-12-RKW6-RSW6-0,6/A1	43-11099
	1,5m	SAL-12-RKW5-RSW5-1,5/A1	43-10782	SAL-12-RKW6-RSW6-1,5/A1	43-11100
	3,0m	SAL-12-RKW5-RSW5-3/A1	43-10783	SAL-12-RKW6-RSW6-3/A1	43-11101
TPU, high flexible halogenfree, UL black at 5-pos Li9Y11Y 0,34mm² at 6-pos Li9Y11Y 0,25mm²	0,3m	SAL-12-RKW5-RSW5-0,3/K1	43-10792	SAL-12-RKW6-RSW6-0,3/K1	43-11102
	0,6m	SAL-12-RKW5-RSW5-0,6/K1	43-10793	SAL-12-RKW6-RSW6-0,6/K1	43-11103
	1,5m	SAL-12-RKW5-RSW5-1,5/K1	43-10794	SAL-12-RKW6-RSW6-1,5/K1	43-11104
	3,0m	SAL-12-RKW5-RSW5-3/K1	43-10795	SAL-12-RKW6-RSW6-3/K1	43-11105
TPU, irradiated halogenfree, UL orange Li9Y11X 0,34mm²	0,3m	SAL-12-RKW5-RSW5-0,3/J1	43-10796		
	0,6m	SAL-12-RKW5-RSW5-0,6/J1	43-10797		
	1,5m	SAL-12-RKW5-RSW5-1,5/J1	43-10798		
	3,0m	SAL-12-RKW5-RSW5-3/J1	43-10799		

For custom length or quality levels contact factory.

SAL M12x1 Connectors

Connecting cable Female connector, angled – Male connector, angled

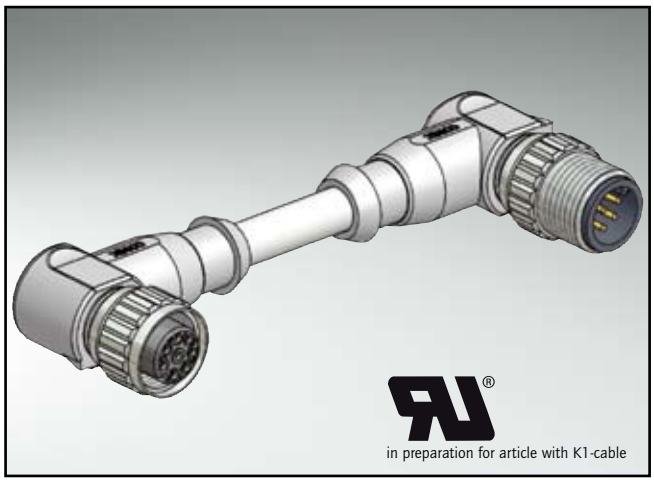

Technical Data

Rated voltage	8-pos / 30V
Current rating	2A at +40°C
Pollution degree	3/2
Insulation resistance	=$10^9\Omega$
Degree of protection	IP67 in mated condition
Temperature range	-30°C to +80°C
Mating cycles	<=100

Directive 2002 95 EC „RoHS" Compliant

Pin configuration

8-pos female

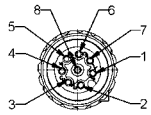

8-pos male

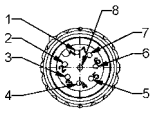

Contact assignment 8-pos

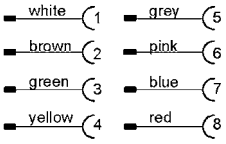

Dimension drawing

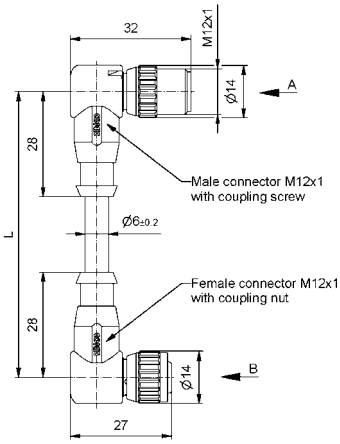

Order data

Cable	Length/L	Description	8-pos Part-no.
PVC, grey LiYY 0,25mm²	0,3m	SAL-12-RKW8-RSW8-0,3/A1	43-10800
	0,6m	SAL-12-RKW8-RSW8-0,6/A1	43-10801
	1,5m	SAL-12-RKW8-RSW8-1,5/A1	43-10802
	3,0m	SAL-12-RKW8-RSW8-3/A1	43-10803
TPU, high flexible halogenfree, UL black Li9Y11Y 0,25mm²	0,3m	SAL-12-RKW8-RSW8-0,3/K1	43-11074
	0,6m	SAL-12-RKW8-RSW8-0,6/K1	43-11075
	1,5m	SAL-12-RKW8-RSW8-1,5/K1	43-11076
	3,0m	SAL-12-RKW8-RSW8-3/K1	43-11077

For custom length or quality levels contact factory.

SAL M12x1 Connectors

Connecting cable

Female connector, angled with 2-Indicators LED-display – Male connector, axial

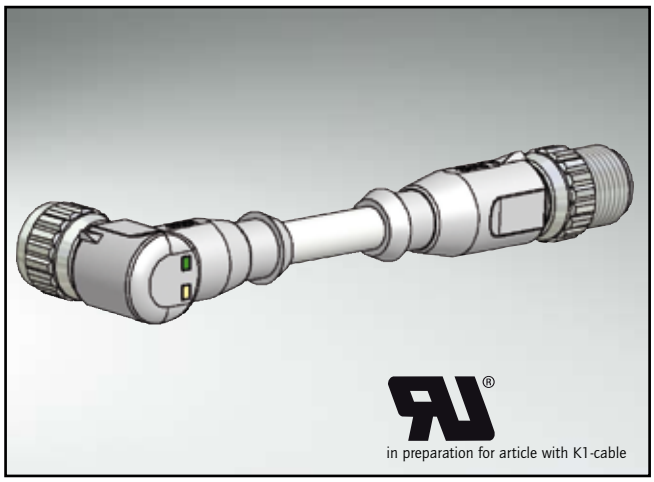

Technical Data

	3-pos	5-pos
Rated voltage	30V	30V
Current rating	4A at +40°C	
Pollution degree	3/2	
Insulation resistance	=$10^9\Omega$	
Degree of protection	IP67 in mated condition	
Temperature range	-30°C to +80°C	
Mating cycles	<=100	

Directive 2002 95 EC „RoHS" Compliant

Pin configuration

3-pos female

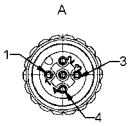

5-pos female

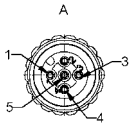

3-pos male

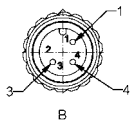

5-pos male

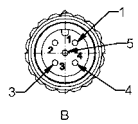

Contact assignment 3-pos

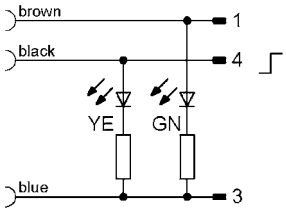

Contact assignment 5-pos

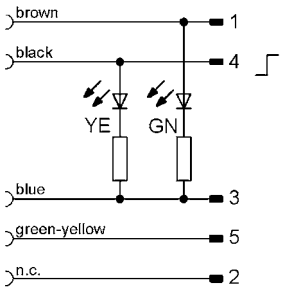

Dimension drawing

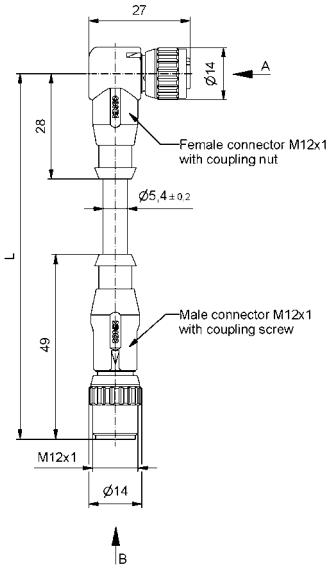

Order data

Cable	Length/L	Description	3-pos Part-no.	Description	5-pos Part-no.
PVC, grey LiYY 0,34mm²	0,3m	SAL-12-RKW3-RS3-2L-0,3/A1	43-10392	SAL-12-RKW5.2-RS5-2L-0,3/A1	43-10404
	0,6m	SAL-12-RKW3-RS3-2L-0,6/A1	43-10393	SAL-12-RKW5.2-RS5-2L-0,6/A1	43-10405
	1,5m	SAL-12-RKW3-RS3-2L-1,5/A1	43-10394	SAL-12-RKW5.2-RS5-2L-1,5/A1	43-10406
	3,0m	SAL-12-RKW3-RS3-2L-3/A1	43-10395	SAL-12-RKW5.2-RS5-2L-3/A1	43-10407
TPU, high flexible halogenfree, UL black Li9Y11Y 0,34mm²	0,3m	SAL-12-RKW3-RS3-2L-0,3/K1	43-10884	SAL-12-RKW5.2-RS5-2L-0,3/K1	43-10892
	0,6m	SAL-12-RKW3-RS3-2L-0,6/K1	43-10885	SAL-12-RKW5.2-RS5-2L-0,6/K1	43-10893
	1,5m	SAL-12-RKW3-RS3-2L-1,5/K1	43-10886	SAL-12-RKW5.2-RS5-2L-1,5/K1	43-10894
	3,0m	SAL-12-RKW3-RS3-2L-3/K1	43-10887	SAL-12-RKW5.2-RS5-2L-3/K1	43-10895
TPU, irradiated halogenfree, UL orange Li9Y11X 0,34mm²	0,3m	SAL-12-RKW3-RS3-2L-0,3/J1	43-10888	SAL-12-RKW5.2-RS5-2L-0,3/J1	43-10896
	0,6m	SAL-12-RKW3-RS3-2L-0,6/J1	43-10889	SAL-12-RKW5.2-RS5-2L-0,6/J1	43-10897
	1,5m	SAL-12-RKW3-RS3-2L-1,5/J1	43-10890	SAL-12-RKW5.2-RS5-2L-1,5/J1	43-10898
	3,0m	SAL-12-RKW3-RS3-2L-3/J1	43-10891	SAL-12-RKW5.2-RS5-2L-3/J1	43-10899

For custom length or quality levels contact factory.

SAL M12X1 CONNECTORS

Connecting cable

Female connector, angled with 3-Indicators LED-display – Male connector, axial

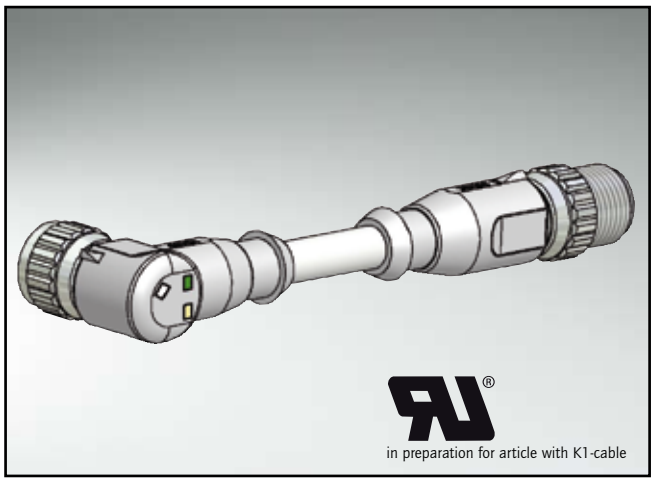

TECHNICAL DATA

	4-pos	5-pos
Rated voltage	30V	30V
Current rating	4A at +40°C	
Pollution degree	3/2	
Insulation resistance	=$10^9\Omega$	
Degree of protection	IP67 in mated condition	
Temperature range	-30°C to +80°C	
Mating cycles	<=100	

Directive 2002 95 EC „RoHS" Compliant

PIN CONFIGURATION

4-pos female

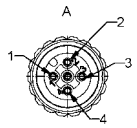

5-pos female

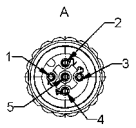

4-pos male

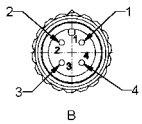

5-pos male

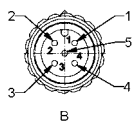

CONTACT ASSIGNMENT 4-POS

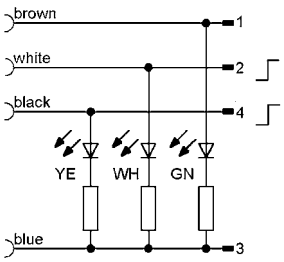

CONTACT ASSIGNMENT 5-POS

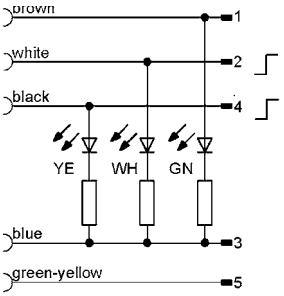

DIMENSION DRAWING

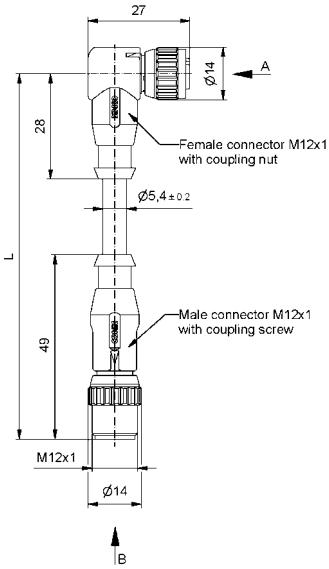

ORDER DATA

Cable	Length/L	Description	4-pos Part-no.	Description	5-pos Part-no.
PVC, grey LiYY 0,34mm²	0,3m	SAL-12-RKW4-RS4-3L-0,3/A1	43-10416	SAL-12-RKW5-RS5-3L-0,3/A1	43-10848
	0,6m	SAL-12-RKW4-RS4-3L-0,6/A1	43-10417	SAL-12-RKW5-RS5-3L-0,6/A1	43-10849
	1,5m	SAL-12-RKW4-RS4-3L-1,5/A1	43-10418	SAL-12-RKW5-RS5-3L-1,5/A1	43-10850
	3,0m	SAL-12-RKW4-RS4-3L-3/A1	43-10419	SAL-12-RKW5-RS5-3L-3/A1	43-10851
TPU, high flexible halogenfree, UL black Li9Y11Y 0,34mm²	0,3m	SAL-12-RKW4-RS4-3L-0,3/K1	43-10840	SAL-12-RKW5-RS5-3L-0,3/K1	43-10860
	0,6m	SAL-12-RKW4-RS4-3L-0,6/K1	43-10841	SAL-12-RKW5-RS5-3L-0,6/K1	43-10861
	1,5m	SAL-12-RKW4-RS4-3L-1,5/K1	43-10842	SAL-12-RKW5-RS5-3L-1,5/K1	43-10862
	3,0m	SAL-12-RKW4-RS4-3L-3/K1	43-10843	SAL-12-RKW5-RS5-3L-3/K1	43-10863
TPU, irradiated halogenfree, UL orange Li9Y11X 0,34mm²	0,3m	SAL-12-RKW4-RS4-3L-0,3/J1	43-10844	SAL-12-RKW5-RS5-3L-0,3/J1	43-10864
	0,6m	SAL-12-RKW4-RS4-3L-0,6/J1	43-10845	SAL-12-RKW5-RS5-3L-0,6/J1	43-10865
	1,5m	SAL-12-RKW4-RS4-3L-1,5/J1	43-10846	SAL-12-RKW5-RS5-3L-1,5/J1	43-10866
	3,0m	SAL-12-RKW4-RS4-3L-3/J1	43-10847	SAL-12-RKW5-RS5-3L-3/J1	43-10867

For custom length or quality levels contact factory.

SAL M12x1 Connectors

Connecting cable with 360°-shielding
Female connector, axial – Male connector, axial

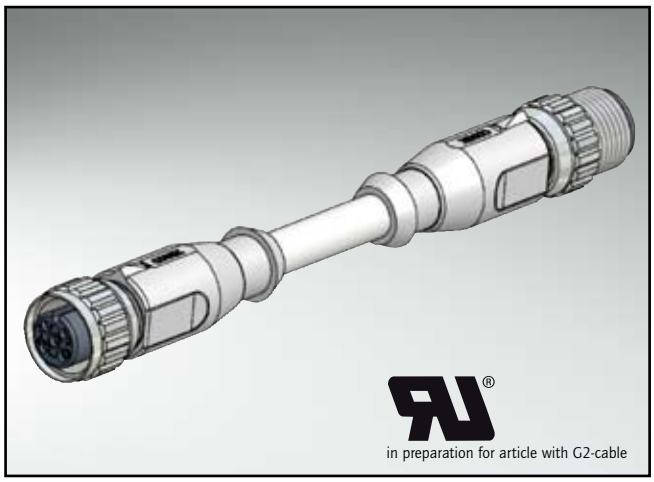

Technical Data

Rated voltage	4-pos	5-pos
	160V	60V
Current rating	4A at +40°C	
Pollution degree	3/2	
Insulation resistance	=$10^9\Omega$	
Degree of protection	IP67 in mated condition	
Temperature range	-30°C to +80°C	
Mating cycles	<=100	

Directive 2002 95 EC „RoHS" Compliant

Pin configuration

4-pos female

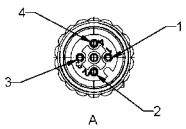

5-pos female

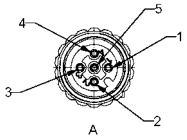

4-pos male

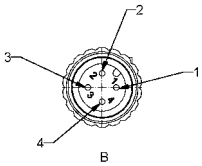

5-pos male

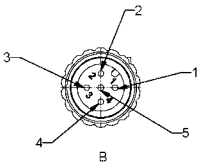

Contact assignment 4 - 5-pos

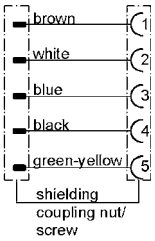

Dimension drawing

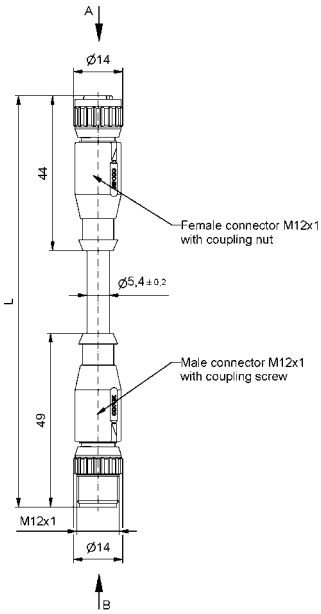

Order data

Cable	Length/L	Description	4-pos Part-no.	Description	5-pos Part-no.
PVC, UL	0,3m	SAL-12S-RK4-RS4-0,3/G3	43-10812	SAL-12S-RK5-RS5-0,3/G3	43-10824
grey	0,6m	SAL-12S-RK4-RS4-0,6/G3	43-10813	SAL-12S-RK5-RS5-0,6/G3	43-10825
at 4-pos LiYFCY 0,34mm²	1,5m	SAL-12S-RK4-RS4-1,5/G3	43-10814	SAL-12S-RK5-RS5-1,5/G3	43-10826
at 5-pos LiYFCY 0,25mm²	3,0m	SAL-12S-RK4-RS4-3/G3	43-10815	SAL-12S-RK5-RS5-3/G3	43-10827
TPU, high flexible	0,3m	SAL-12S-RK4-RS4-0,3/G2	43-10820	SAL-12S-RK5-RS5-0,3/G2	43-10832
halogenfree, UL	0,6m	SAL-12S-RK4-RS4-0,6/G2	43-10821	SAL-12S-RK5-RS5-0,6/G2	43-10833
black	1,5m	SAL-12S-RK4-RS4-1,5/G2	43-10822	SAL-12S-RK5-RS5-1,5/G2	43-10834
at 4-pos Li9YFC11Y 0,34mm²					
at 5-pos Li9YFC11Y 0,25mm²	3,0m	SAL-12S-RK4-RS4-3/G2	43-10823	SAL-12S-RK5-RS5-3/G2	43-10835

For custom length or quality levels contact factory.

SAL M12X1 CONNECTORS

Connecting cable with 360°-shielding
Female connector, axial – Male connector, axial

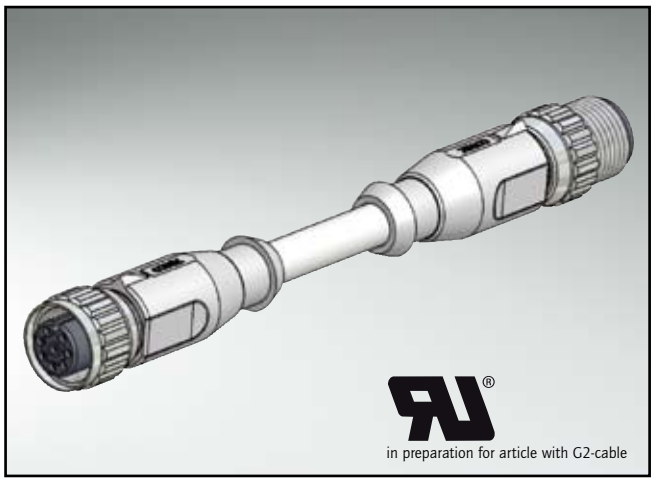

TECHNICAL DATA

Rated voltage	8-pos / 30V
Current rating	2A at +40°C
Pollution degree	3/2
Insulation resistance	=$10^9\Omega$
Degree of protection	IP67 in mated condition
Temperature range	-30°C to +80°C
Mating cycles	<=100

Directive 2002 95 EC „RoHS" Compliant

PIN CONFIGURATION

8-pos female

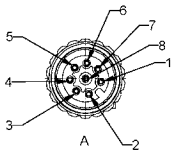

8-pos male

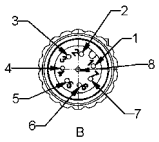

CONTACT ASSIGNMENT 8-POS

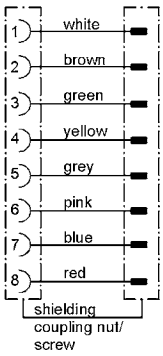

DIMENSION DRAWING

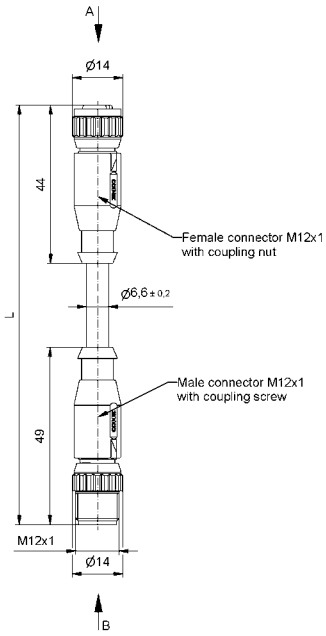

ORDER DATA

Cable	Length/L	Description	8-pos Part-no.
PVC, UL grey LiYFCY 0,25mm²	0,3m	SAL-12S-RK8-RS8-0,3/G3	43-10988
	0,6m	SAL-12S-RK8-RS8-0,6/G3	43-10989
	1,5m	SAL-12S-RK8-RS8-1,5/G3	43-10990
	3,0m	SAL-12S-RK8-RS8-3/G3	43-10991
TPU, high flexible halogenfree, UL black Li9YFC11Y 0,25mm²	0,3m	SAL-12S-RK8-RS8-0,3/G2	43-10992
	0,6m	SAL-12S-RK8-RS8-0,6/G2	43-10993
	1,5m	SAL-12S-RK8-RS8-1,5/G2	43-10994
	3,0m	SAL-12S-RK8-RS8-3/G2	43-10995

For custom length or quality levels contact factory.

SAL M12x1/M8x1 Connectors

Connecting cable Female connector M12x1, axial – Male connector M8x1, axial

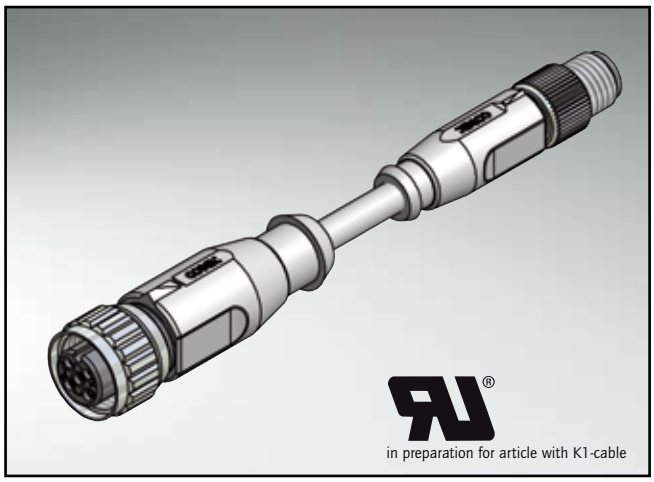

Technical Data

Rated voltage	3-pos 60V
Current rating	4A at +40°C
Pollution degree	3/2
Insulation resistance	=$10^9\Omega$
Degree of protection	IP67 in mated condition
Temperature range	-30°C to +80°C
Mating cycles	<=100

Directive 2002 95 EC
„RoHS"
Compliant

Pin configuration

3-pos female

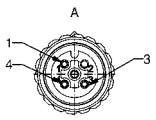

3-pos male

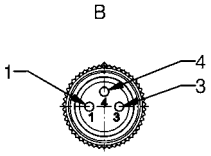

Contact assignment 3-pos

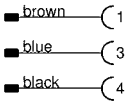

Dimension drawing

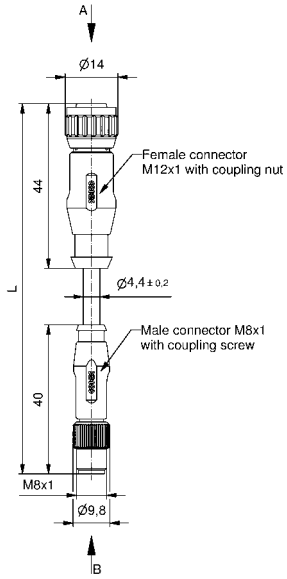

Order data

Cable	Length/L	Description	3-pos Part-no.
PVC, grey LiYY 0,25mm²	0,3m	SAL-12-RK3-8-RS3-0,3/A1	43-11430
	0,6m	SAL-12-RK3-8-RS8-0,6/A1	43-11431
	1,5m	SAL-12-RK3-8-RS3-1,5/A1	43-11432
	3,0m	SAL-12-RK3-8-RS3-3/A1	43-11433
TPU, high flexible halogenfree, UL black Li9Y11Y 0,25mm²	0,3m	SAL-12-RK3-8-RS3-0,3/K1	43-11434
	0,6m	SAL-12-RK3-8-RS3-0,6/K1	43-11435
	1,5m	SAL-12-RK3-8-RS3-1,5/K1	43-11436
	3,0m	SAL-12-RK3-8-RS3-3/K1	43-11437

For custom length or quality levels contact factory.

SAL M12X1/M8X1 CONNECTORS

Connecting cable Female connector M12x1, angled – Male connector M8x1, axial

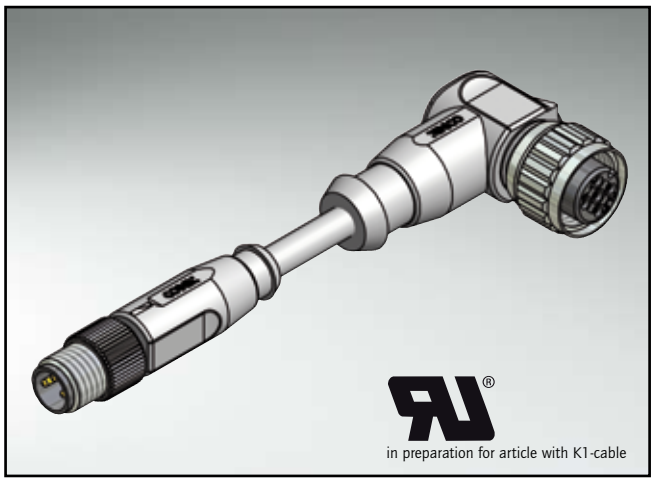

TECHNICAL DATA

Rated voltage	3-pos / 60V
Current rating	4A at +40°C
Pollution degree	3/2
Insulation resistance	=$10^9\Omega$
Degree of protection	IP67 in mated condition
Temperature range	-30°C to +80°C
Mating cycles	<=100

Directive 2002 95 EC „RoHS" Compliant

PIN CONFIGURATION

3-pos female

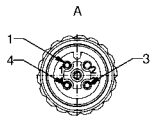

3-pos male

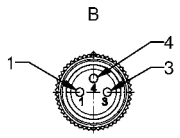

CONTACT ASSIGNMENT 3-POS

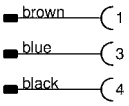

DIMENSION DRAWING

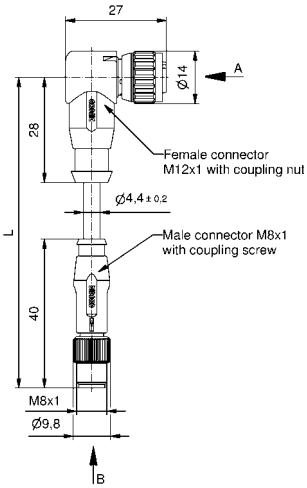

ORDER DATA

Cable	Length/L	Description	3-pos Part-no.
PVC, grey LiYY 0,25mm²	0,3m	SAL-12-RKW3-8-RS3-0,3/A1	43-11438
	0,6m	SAL-12-RKW3-8-RS3-0,6/A1	43-11439
	1,5m	SAL-12-RKW3-8-RS3-1,5/A1	43-11440
	3,0m	SAL-12-RKW3-8-RS3-3/A1	43-11441
TPU, high flexible halogenfree, UL black Li9Y11Y 0,25mm²	0,3m	SAL-12-RKW3-8-RS3-0,3/K1	43-11442
	0,6m	SAL-12-RKW3-8-RS3-0,6/K1	43-11443
	1,5m	SAL-12-RKW3-8-RS3-1,5/K1	43-11444
	3,0m	SAL-12-RKW3-8-RS3-3/K1	43-11445

For custom length or quality levels contact factory.

SAL M12x1/M8x1 Connectors

Connecting cable Male connector M12x1, axial – Female connector M8x1, axial

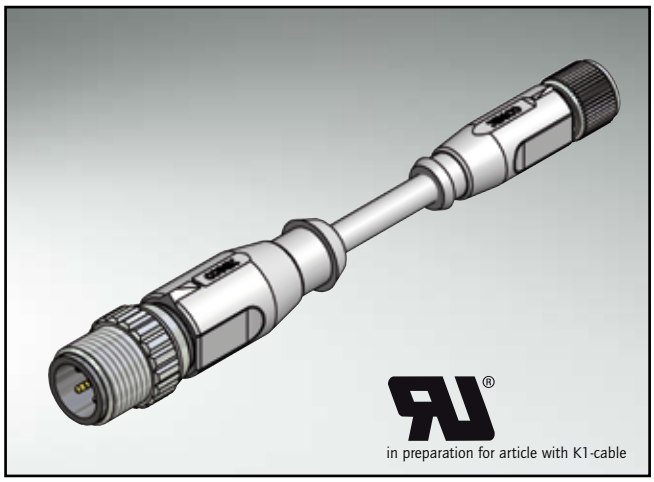

Technical Data

Rated voltage	3-pos 60V
Current rating	4A at +40°C
Pollution degree	3/2
Insulation resistance	=$10^9\Omega$
Degree of protection	IP67 in mated condition
Temperature range	-30°C to +80°C
Mating cycles	<=100

Directive 2002 95 EC
„RoHS"
Compliant

Pin configuration

3-pos male

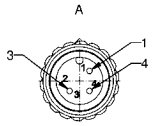

3-pos female

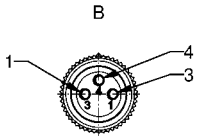

Contact assignment 3-pos

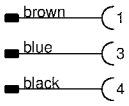

Dimension drawing

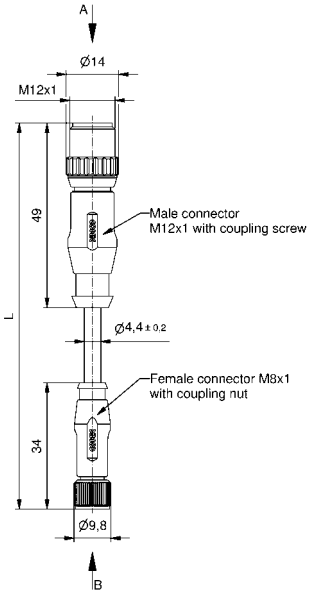

Order data

Cable	Length/L	Description	3-pos Part-no.
PVC, grey LiYY 0,25mm²	0,3m	SAL-12-RS3-8-RK3-0,3/A1	43-11446
	0,6m	SAL-12-RS3-8-RK3-0,6/A1	43-11447
	1,5m	SAL-12-RS3-8-RK3-1,5/A1	43-11448
	3,0m	SAL-12-RS3-8-RK3-3/A1	43-11449
TPU, high flexible halogenfree, UL black Li9Y11Y 0,25mm²	0,3m	SAL-12-RS3-8-RK3-0,3/K1	43-11450
	0,6m	SAL-12-RS3-8-RK3-0,6/K1	43-11451
	1,5m	SAL-12-RS3-8-RK3-1,5/K1	43-11452
	3,0m	SAL-12-RS3-8-RK3-3/K1	43-11453

For custom length or quality levels contact factory.

SAL M12X1/M8X1 CONNECTORS

Connecting cable Male connector M12x1, axial – Female connector M8x1, angled

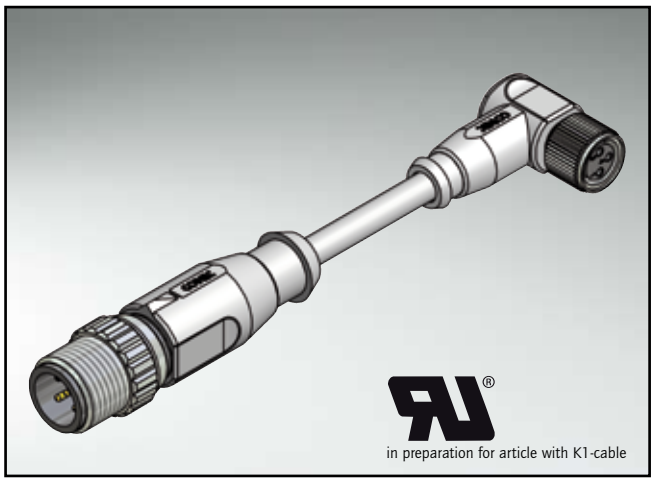

TECHNICAL DATA

Rated voltage	3-pos 60V
Current rating	4A at +40°C
Pollution degree	3/2
Insulation resistance	=$10^9\Omega$
Degree of protection	IP67 in mated condition
Temperature range	-30°C to +80°C
Mating cycles	<=100

Directive 2002 95 EC „RoHS" Compliant

PIN CONFIGURATION

3-pos female

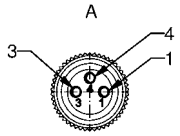

3-pos male

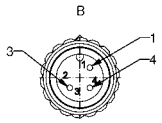

CONTACT ASSIGNMENT 3-POS

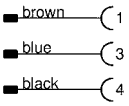

DIMENSION DRAWING

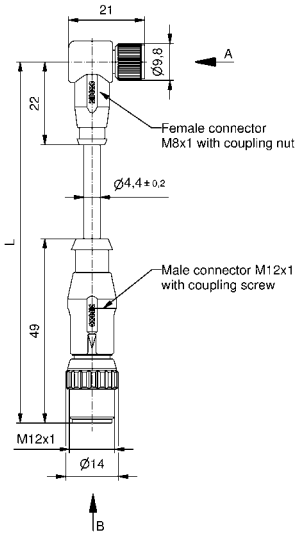

ORDER DATA

Cable	Length/L	Description	3-pos Part-no.
PVC, grey LiYY 0,25mm²	0,3m	SAL-12-RS3-8-RKW3-0,3/A1	43-11454
	0,6m	SAL-12-RS3-8-RKW3-0,6/A1	43-11455
	1,5m	SAL-12-RS3-8-RKW3-1,5/A1	43-11456
	3,0m	SAL-12-RS3-8-RKW3-3/A1	43-11457
TPU, high flexible halogenfree, UL black Li9Y11Y 0,25mm²	0,3m	SAL-12-RS3-8-RKW3-0,3/K1	43-11458
	0,6m	SAL-12-RS3-8-RKW3-0,6/K1	43-11459
	1,5m	SAL-12-RS3-8-RKW3-1,5/K1	43-11460
	3,0m	SAL-12-RS3-8-RKW3-3/K1	43-11461

For custom length or quality levels contact factory.

Section 2
Connectors field-attachable

Field attachable connectors from CONEC give you the freedom and flexibility to react to the cabling situation on site. Practical, cost-effective and, above all, flexible solutions for quick cabling are required for both small series as well as special purpose machines. This program comprises connectors and adapters – naturally with anti-vibration locking – in a straight or angled construction as well as in shielded versions. You can choose between screw and clamp connections as well as a maximum cable diameter of 6 or 8 mm.

SAL M12x1 Connectors field-attachable

Nomenclature

S A L - 1 2 ■ - R K W C 4 - S 6

SAL
Sensor Actor Line

Installation size
12 = M12x1

Coding
= A-coding
S = A-coding shielded

Building
R = Circular connector

Configuration
K = Female connector
S = Male connector

Building
= Standard
W = Angled

Building
C = Field-attachable

Number of poles
4 = 4-pos
5 = 5-pos

Type of connection
S = Screw termination
K = Clamp connection

Max. cable outer diameter
6 = 4-6mm Cable sealing
8 = 6-8mm Cable sealing

SAL M12x1 Connectors field-attachable

Technical Data

Basic material	
Contact	CuZn
Contact plating	Nickel-plated, gold-plated
Contact carrier	PA6, UL 94
Housing	Standard: PA6 GF, UL 94 / Shielded: Die Cast, nickel-plated
Clamp-/srew contact	Stainless steel nickel-plated
Cable sealing	Elastomere
O-Ring	FPM
Coupling nut/-screw	Die Cast, nickel-plated

Information on the following pages are basing on below mentioned IEC-standards.

Rated voltage	IEC 61076-2-101
Current rating	IEC 61076-2-101
Insulation resistance	IEC 60512-2
Pollution degree	IEC 60664-1
Degree of protection	IEC 60529
Temperature range	IEC 60664-1
Mating cycles	IEC 61076-2-101

Technical subject to change without notice.

SAL M12x1 Connectors

Female connector, axial, field-attachable with clamp connection

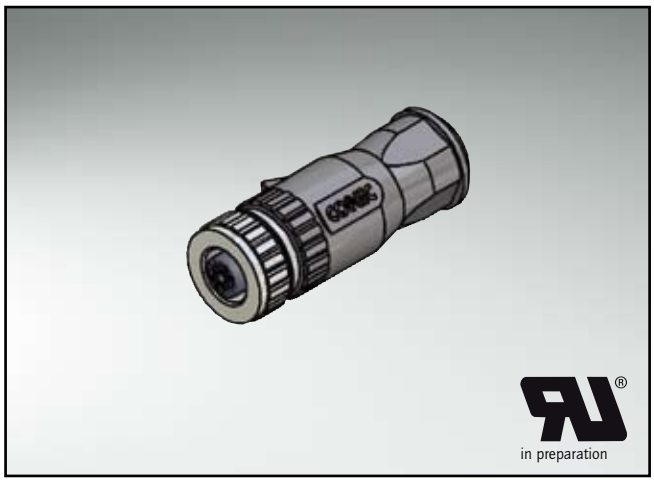

Technical Data

	4-pos	5-pos
Rated voltage	250V	60V
Current rating	4A at +40°C	
Pollution degree	3/2	
Insulation resistance	=$10^9\Omega$	
Degree of protection	IP67 in mated condition	
Temperature range	-30°C to +85°C	
Mating cycles	<=100	

Directive 2002 95 EC „RoHS" Compliant

Pin configuration

4 - 5-pos

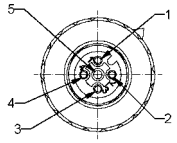

Dimension drawing

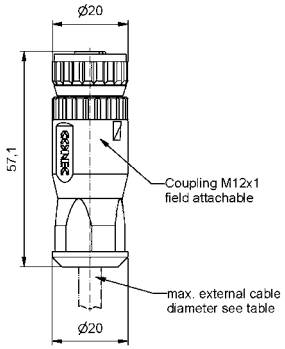

Order data

Cable outer diameter	Description	4-pos Part-no.	Description	5-pos Part-no.
max. Ø6mm	SAL-12-RKC4-K6	43-00001	SAL-12-RKC5-K6	43-00003
max. Ø8mm	SAL-12-RKC4-K8	43-00002	SAL-12-RKC5-K8	43-00004

SAL M12X1 CONNECTORS

Female connector, axial, field-attachable with screw termination

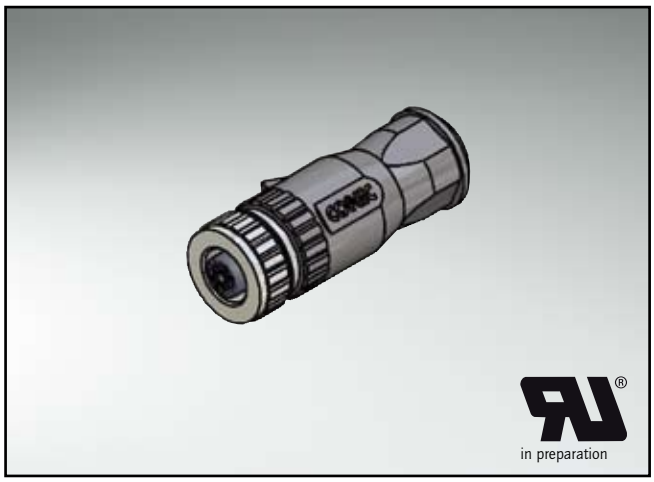

TECHNICAL DATA

Rated voltage	4-pos	5-pos
	250V	60V
Current rating	4A at +40°C	
Pollution degree	3/2	
Insulation resistance	=$10^9\Omega$	
Degree of protection	IP67 in mated condition	
Temperature range	-30°C to +85°C	
Mating cycles	<=100	

Directive 2002 95 EC „RoHS" Compliant

PIN CONFIGURATION

4 - 5-pos

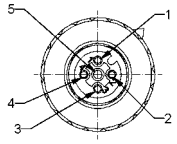

DIMENSION DRAWING

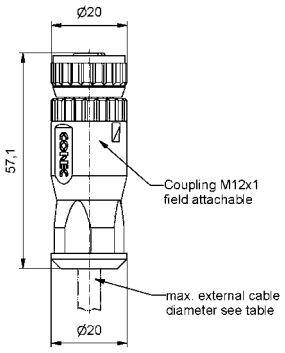

ORDER DATA

Cable outer diameter	Description	4-pos Part-no.	Description	5-pos Part-no.
max. Ø6mm	SAL-12-RKC4-S6	43-00005	SAL-12-RKC5-S6	43-00007
max. Ø8mm	SAL-12-RKC4-S8	43-00006	SAL-12-RKC5-S8	43-00008

SAL M12x1 Connectors

Male connector, axial, field-attachable with clamp connection

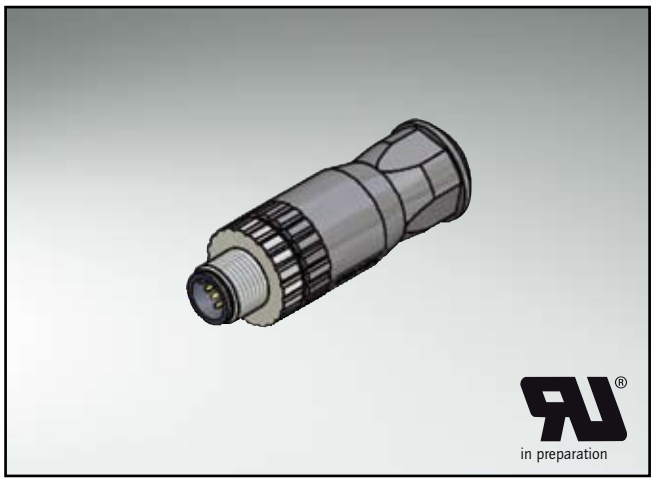

Technical Data

	4-pos	5-pos
Rated voltage	250V	60V
Current rating	4A at +40°C	
Pollution degree	3/2	
Insulation resistance	=$10^9\Omega$	
Degree of protection	IP67 in mated condition	
Temperature range	-30°C to +85°C	
Mating cycles	<=100	

Directive 2002 95 EC „RoHS" Compliant

Pin configuration

4 - 5-pos

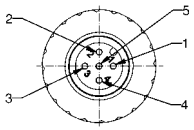

Dimension drawing

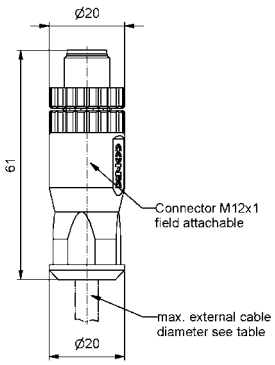

Order data

Cable outer diameter	Description	4-pos Part-no.	Description	5-pos Part-no.
max. Ø6mm	SAL-12-RSC4-K6	43-00017	SAL-12-RSC5-K6	43-00019
max. Ø8mm	SAL-12-RSC4-K8	43-00018	SAL-12-RSC5-K8	43-00020

SAL M12X1 CONNECTORS

Male connector, axial, field-attachable with screw termination

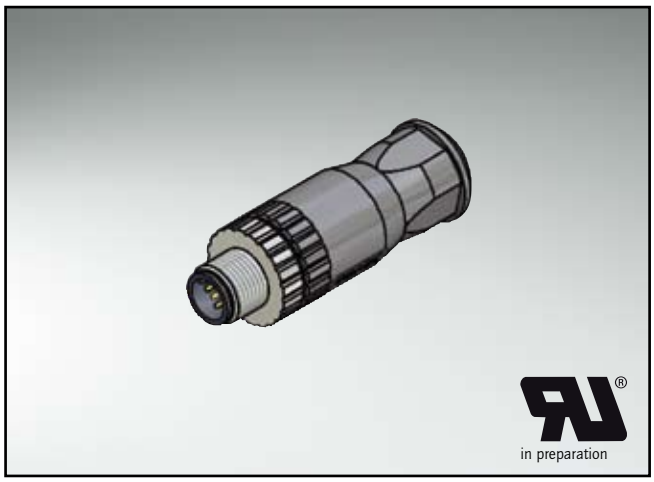

TECHNICAL DATA

Rated voltage	4-pos	5-pos
	250V	60V
Current rating	4A at +40°C	
Pollution degree	3/2	
Insulation resistance	=$10^9\Omega$	
Degree of protection	IP67 in mated condition	
Temperature range	-30°C to +85°C	
Mating cycles	<=100	

Directive 2002 95 EC „RoHS" Compliant

PIN CONFIGURATION

4 - 5-pos

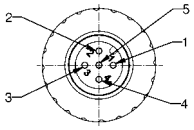

DIMENSION DRAWING

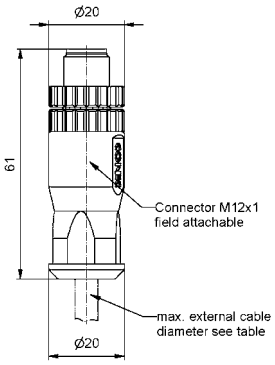

ORDER DATA

Cable outer diameter	Description	4-pos Part-no.	Description	5-pos Part-no.
max. Ø6mm	SAL-12-RSC4-S6	43-00021	SAL-12-RSC5-S6	43-00023
max. Ø8mm	SAL-12-RSC4-S8	43-00022	SAL-12-RSC5-S8	43-00024

SAL M12x1 Connectors

Female connector, angled, field-attachable with clamp connection

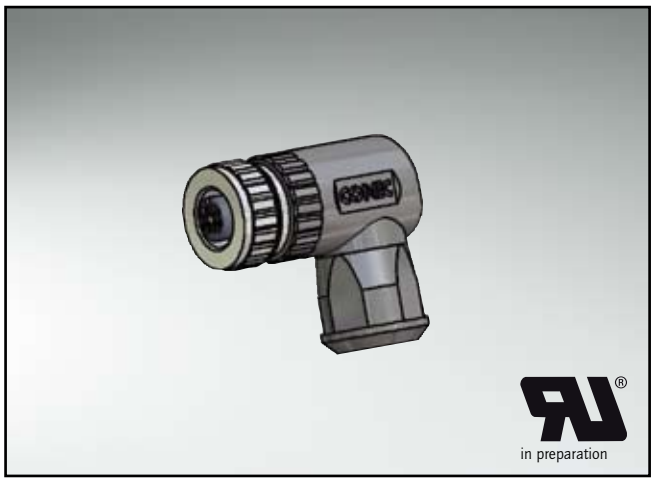

Technical Data

	4-pos	5-pos
Rated voltage	250V	60V
Current rating	4A at +40°C	
Pollution degree	3/2	
Insulation resistance	$=10^9\Omega$	
Degree of protection	IP67 in mated condition	
Temperature range	-30°C to +85°C	
Mating cycles	<=100	

Directive 2002 95 EC „RoHS" Compliant

Pin configuration

4 - 5-pos

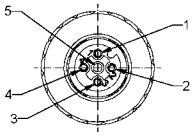

Dimension drawing

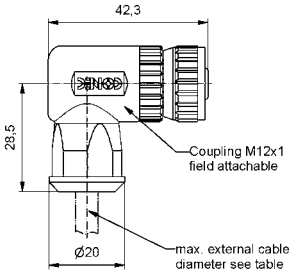

Order data

Cable outer diameter	Description	4-pos Part-no.	Description	5-pos Part-no.
max. Ø6mm	SAL-12-RKWC4-K6	43-00009	SAL-12-RKWC5-K6	43-00011
max. Ø8mm	SAL-12-RKWC4-K8	43-00010	SAL-12-RKWC5-K8	43-00012

SAL M12x1 Connectors

Female connector, angled, field-attachable with screw termination

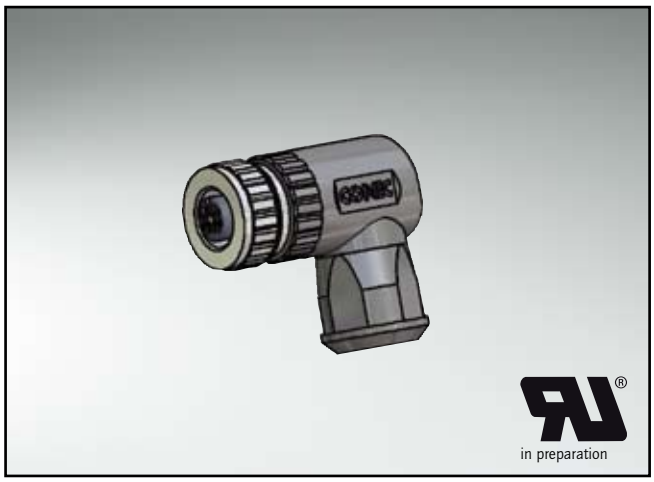

Technical Data

	4-pos	5-pos
Rated voltage	250V	60V
Current rating	4A at +40°C	
Pollution degree	3/2	
Insulation resistance	$=10^9\Omega$	
Degree of protection	IP67 in mated condition	
Temperature range	-30°C to +85°C	
Mating cycles	<=100	

Directive 2002 95 EC „RoHS" Compliant

Pin configuration

4 - 5-pos

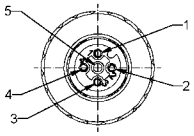

Dimension drawing

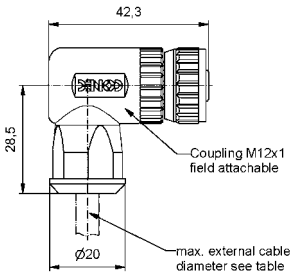

Order data

Cable outer diameter	Description	4-pos Part-no.	Description	5-pos Part-no.
max. Ø6mm	SAL-12-RKWC4-S6	43-00013	SAL-12-RKWC5-S6	43-00015
max. Ø8mm	SAL-12-RKWC4-S8	43-00014	SAL-12-RKWC5-S8	43-00016

SAL M12x1 Connectors

Male connector, angled, field-attachable with clamp connection

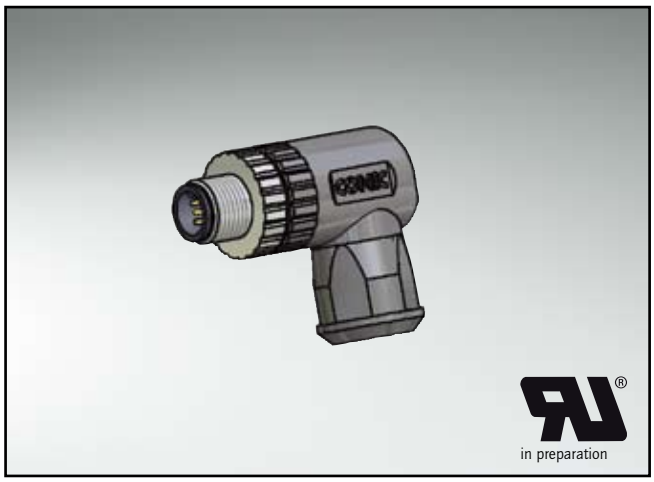

Technical Data

	4-pos	5-pos
Rated voltage	250V	60V
Current rating	4A at +40°C	
Pollution degree	3/2	
Insulation resistance	=$10^9\Omega$	
Degree of protection	IP67 in mated condition	
Temperature range	-30°C to +85°C	
Mating cycles	<=100	

Directive 2002 95 EC „RoHS" Compliant

Pin configuration

4 - 5-pos

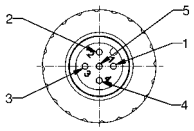

Dimension drawing

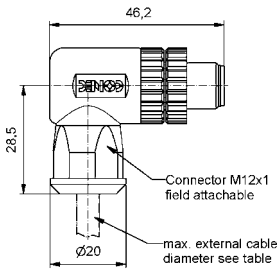

Order data

Cable outer diameter	Description	4-pos Part-no.	Description	5-pos Part-no.
max. Ø6mm	SAL-12-RSWC4-K6	43-00025	SAL-12-RSWC5-K6	43-00027
max. Ø8mm	SAL-12-RSWC4-K8	43-00026	SAL-12-RSWC5-K8	43-00028

SAL M12x1 Connectors

Male connector, angled, field-attachable with screw termination

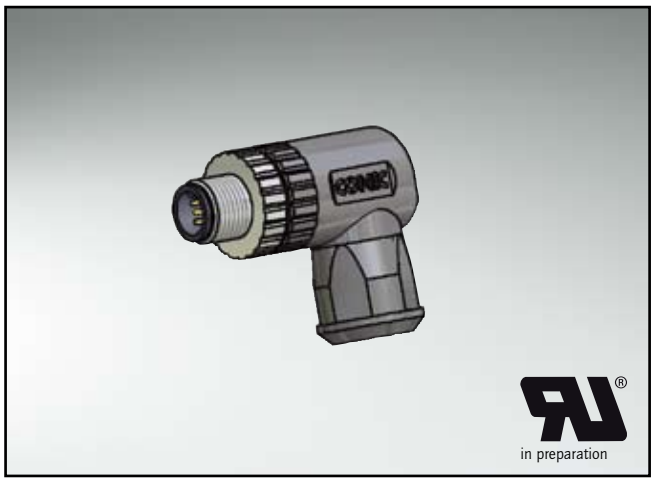

Technical Data

	4-pos	5-pos
Rated voltage	250V	60V
Current rating	4A at +40°C	
Pollution degree	3/2	
Insulation resistance	=$10^9\Omega$	
Degree of protection	IP67 in mated condition	
Temperature range	-30°C to +85°C	
Mating cycles	<=100	

Directive 2002 95 EC „RoHS" Compliant

Pin configuration

4 - 5-pos

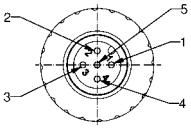

Dimension drawing

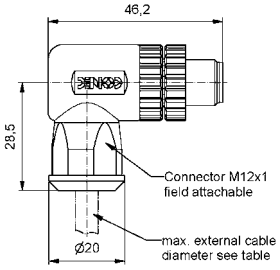

Order data

Cable outer diameter	Description	4-pos Part-no.	Description	5-pos Part-no.
max. Ø6mm	SAL-12-RSWC4-S6	43-00029	SAL-12-RSWC5-S6	43-00031
max. Ø8mm	SAL-12-RSWC4-S8	43-00030	SAL-12-RSWC5-S8	43-00032

SAL M12x1 Connectors

Female connector, axial, field-attachable, shielded with clamp connection

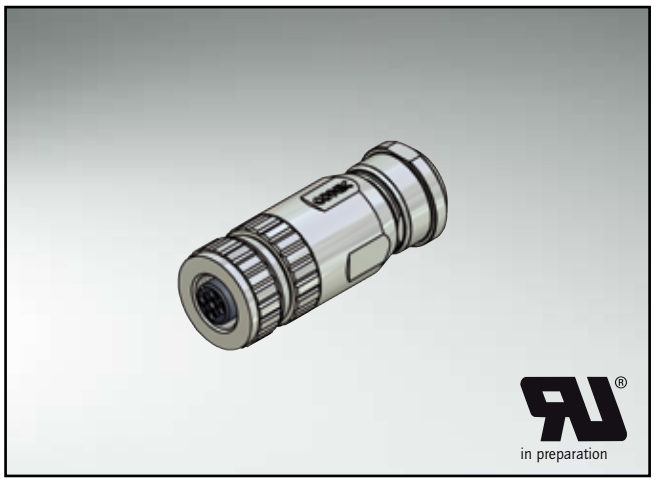

Technical Data

	4-pos	5-pos
Rated voltage	250V	60V
Current rating	4A at +40°C	
Pollution degree	3/2	
Insulation resistance	=$10^9\Omega$	
Degree of protection	IP67 in mated condition	
Temperature range	-30°C to +85°C	
Mating cycles	<=100	

Directive 2002 95 EC „RoHS" Compliant

Pin configuration

4 - 5-pos

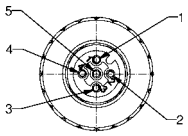

Dimension drawing

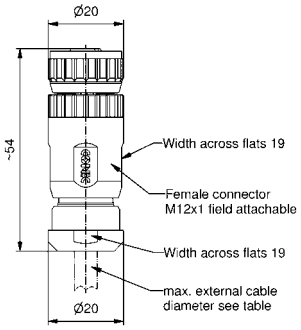

Order data

Cable outer diameter	Description	4-pos Part-no.	Description	5-pos Part-no.
max. Ø6mm	SAL-12S-RKC4-K6	43-00040	SAL-12S-RKC5-K6	43-00042
max. Ø8mm	SAL-12S-RKC4-K8	43-00041	SAL-12S-RKC5-K8	43-00043

SAL M12x1 Connectors

Female connector, axial, field-attachable, shielded with screw termination

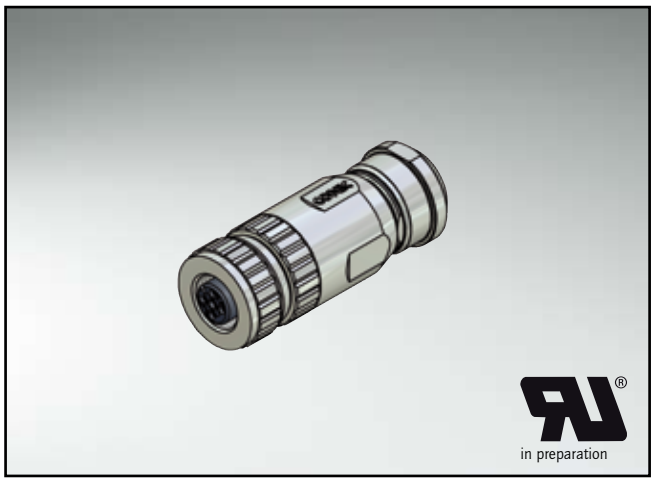

Technical Data

	4-pos	5-pos
Rated voltage	250V	60V
Current rating	4A at +40°C	
Pollution degree	3/2	
Insulation resistance	=$10^9\Omega$	
Degree of protection	IP67 in mated condition	
Temperature range	-30°C to +85°C	
Mating cycles	<=100	

Directive 2002 95 EC „RoHS" Compliant

Pin configuration

4 - 5-pos

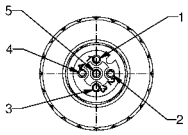

Dimension drawing

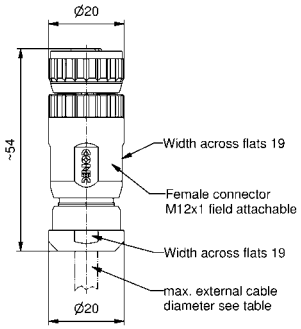

Order data

Cable outer diameter	Description	4-pos Part-no.	Description	5-pos Part-no.
max. Ø6mm	SAL-12S-RKC4-S6	43-00044	SAL-12S-RKC5-S6	43-00046
max. Ø8mm	SAL-12S-RKC4-S8	43-00045	SAL-12S-RKC5-S8	43-00047

SAL M12x1 Connectors

Male connector, axial, field-attachable, shielded with clamp connection

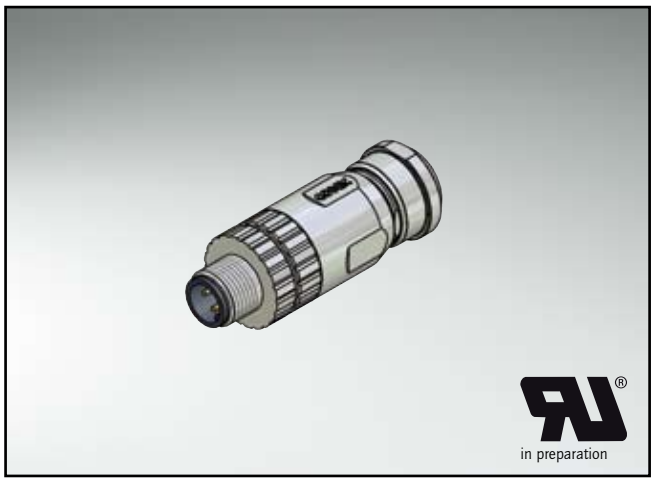

Technical Data

	4-pos	5-pos
Rated voltage	250V	60V
Current rating	4A at +40°C	
Pollution degree	3/2	
Insulation resistance	=$10^9\Omega$	
Degree of protection	IP67 in mated condition	
Temperature range	-30°C to +85°C	
Mating cycles	<=100	

Directive 2002 95 EC „RoHS" Compliant

Pin configuration

4 - 5-pos

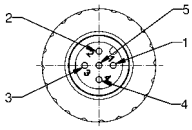

Dimension drawing

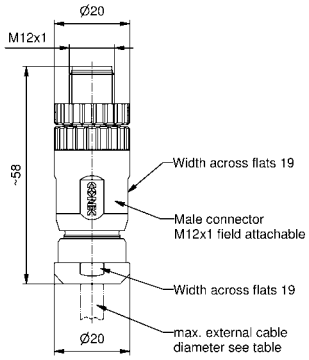

Order data

Cable outer diameter	Description	4-pos Part-no.	Description	5-pos Part-no.
max. Ø6mm	SAL-12S-RSC4-K6	43-00048	SAL-12S-RSC5-K6	43-00050
max. Ø8mm	SAL-12S-RSC4-K8	43-00049	SAL-12S-RSC5-K8	43-00051

SAL M12x1 Connectors

Male connector, axial, field-attachable, shielded with screw termination

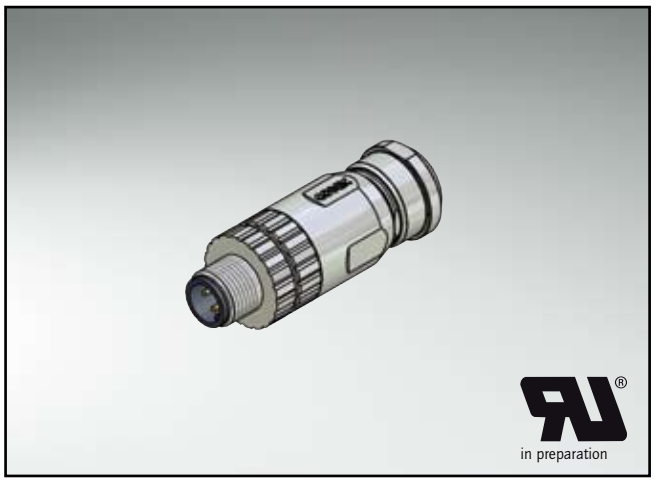

Technical Data

	4-pos	5-pos
Rated voltage	250V	60V
Current rating	4A at +40°C	
Pollution degree	3/2	
Insulation resistance	=$10^9\Omega$	
Degree of protection	IP67 in mated condition	
Temperature range	-30°C to +85°C	
Mating cycles	<=100	

Directive 2002 95 EC „RoHS" Compliant

Pin configuration

4 - 5-pos

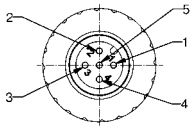

Dimension drawing

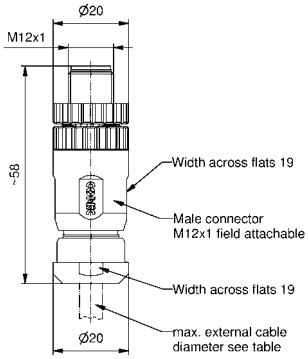

Order data

Cable outer diameter	Description	4-pos Part-no.	Description	5-pos Part-no.
max. Ø6mm	SAL-12S-RSC4-S6	43-00052	SAL-12S-RSC5-S6	43-00054
max. Ø8mm	SAL-12S-RSC4-S8	43-00053	SAL-12S-RSC5-S8	43-00055

Section 3

Sockets M12x1

Connectors and adapters are available in different pin configurations with 0.5 mm long single wires as well as pin contacts for the M12x1 connection to the device.

Front mounted flange connectors with wires are also available. They also can be positioned with a lock nut. Flange connectors and adapters for rear housing assembly with different length pin contacts for soldering directly on the printed circuit board complete the program.

An installation flange for direct assembly on the printed circuit board is also available with a shielded connection option in an axial and angled version. A spring-loaded shield plate connects the flange housing directly to the printed circuit board, which is especially important in bus applications. All products in this series are designed for a printed circuit board thickness of 1.6 mm and a device wall thickness of 2-3 mm. You can select from two different installation heights (10.0 mm and 5.5 mm) for the axial version.

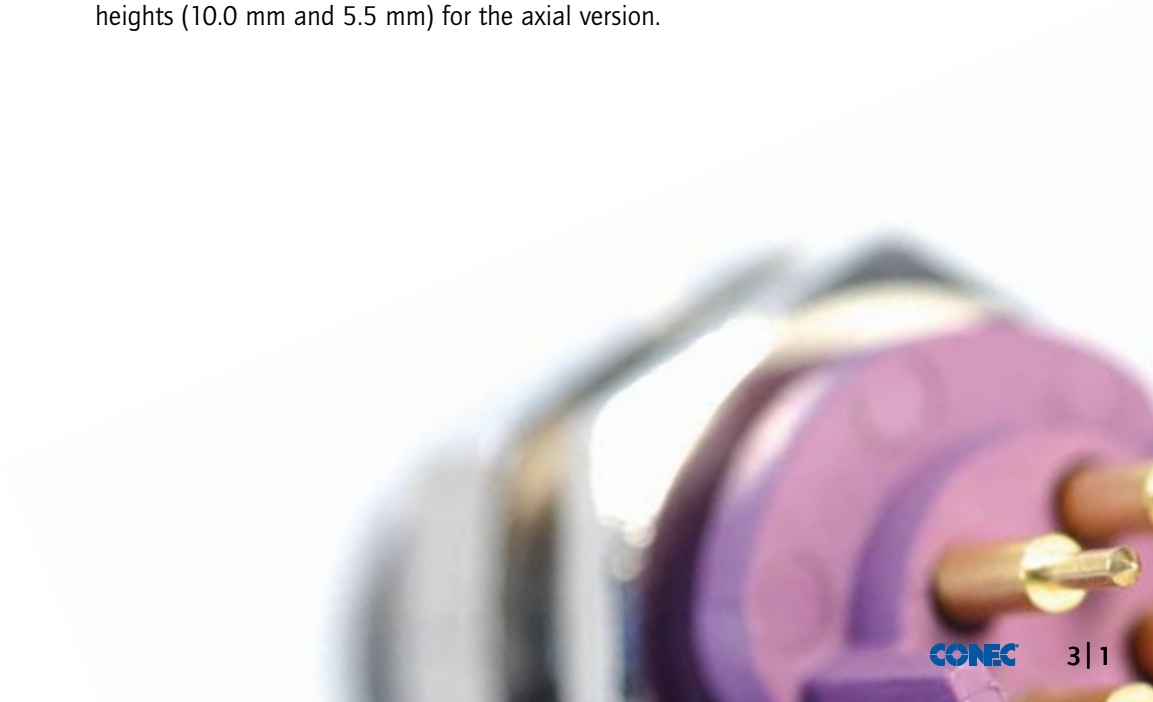

SAL M12x1 Sockets

Nomenclature

S A L - 1 2 ▢ - F K P W 4 - 0,5 - 9

SAL
Sensor Actor Line

Installation size
12 = M12

Coding
= A-coding
S = A-coding shielded

Building
F = Socket

Configuration
K = Female connector
S = Male connector

Assembly
= Frontmounting
P = Positioning possible
H = Backmounting

Building
= Axial
W = Angled

Number of poles
4 = 4-pos
5 = 5-pos
8 = 8-pos

Type of connection
P5,5 = Length [mm]
P12 = Length [mm]
XX = Lenght of wire [m]
X5,5 = Installation height [mm]
X10 = Installation height [mm]

Screw connection
= M16x1,5
9 = PG9

SAL M12x1 Sockets

Technical Data

Basic material	
Contact	CuZn
Contact plating	Nickel-plated, gold-plated
Contact carrier	PBT GF, UL 94 / PA GF, UL 94
Sealing	FPM
Counter nut	CuZn, nickel-plated
Socket housing	CuZn, nickel-plated
Grouting	Polyurethane-resin, UL 94
Shroud	CuSn6
Shroud plated	Sn plated

Information on the following pages are basing on below mentioned IEC-standards.

Rated voltage	IEC 61076-2-101
Current rating	IEC 61076-2-101
Insulation resistance	IEC 60512-2
Pollution degree	IEC 60664-1
Degree of protection	IEC 60529
Temperature range	IEC 60664-1
Mating cycles	IEC 61076-2-101

Technical subject to change without notice.

SAL M12x1 Connectors

Female socket with wire, frontmounting, M16x1,5-thread

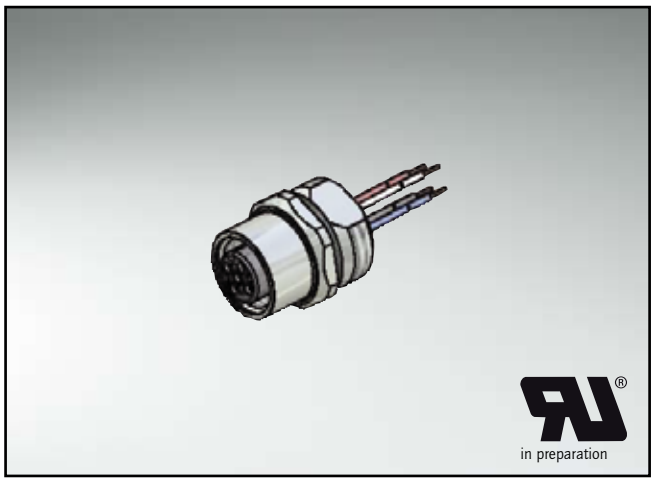

Technical Data

	4-pos	5-pos	8-pos
Rated voltage	250V	60V	30V

Current rating: 4-/5-pos: 4A at +40°C
8-pos: 2A at +40°C

Pollution degree: 3/2

Insulation resistance: =$10^9\Omega$

Degree of protection: IP67 in mated condition

Temperature range: -30°C to +85°C

Mating cycles: <=100

Directive 2002 95 EC „RoHS" Compliant

Pin configuration

4 - 5-pos

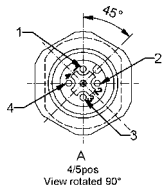

8-pos

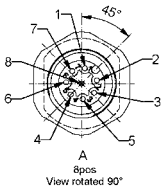

Contact assignment 4 - 5-pos

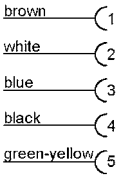

Contact assignment 5.1-pos

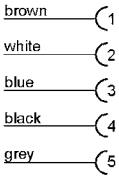

Contact assignment 8-pos

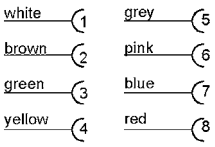

Dimension drawing

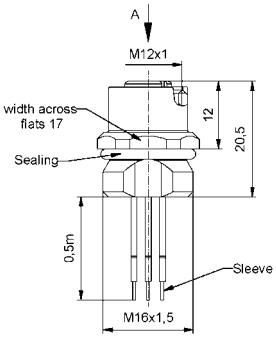

Cut-out front panel

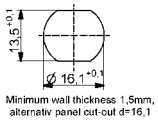

Order data

Wire	Length/L	Description	4-pos Part-no.	Description	5-pos Part-no.	Description	8-pos Part-no.
PVC, UL AWG 24	0,5m	SAL-12-FK4-0,5	43-01000	SAL-12-FK5-0,5	43-01001	SAL-12-FK8-0,5	43-01002
	0,5m			SAL-12-FK5.1-0,5	43-01045		
Accessories Please order separately		Counter nut	43-01155				

SAL M12x1 Connectors

Female socket with wire, frontmounting, PG9-thread

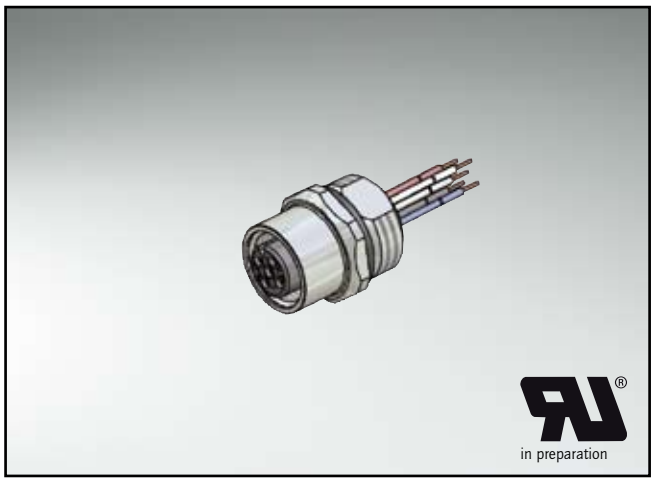

Technical Data

	4-pos	5-pos	8-pos
Rated voltage	250V	60V	30V

Current rating: 4-/5-pos: 4A at +40°C
8-pos: 2A at +40°C

Pollution degree: 3/2

Insulation resistance: $=10^9\Omega$

Degree of protection: IP67 in mated condition

Temperature range: -30°C to +85°C

Mating cycles: <=100

Directive 2002 95 EC „RoHS" Compliant

Pin configuration

4 - 5-pos

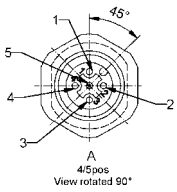

8-pos

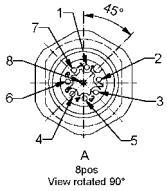

Contact assignment 4 - 5-pos

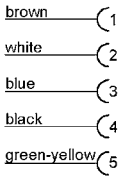

Contact assignment 5.1-pos

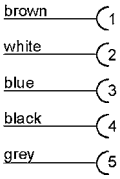

Contact assignment 8-pos

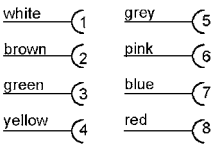

Dimension drawing

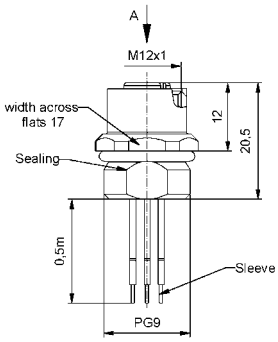

Cut-out front panel

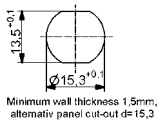

Order data

Wire	Length/L	Description	4-pos Part-no.	Description	5-pos Part-no.	Description	8-pos Part-no.
PVC, UL AWG 24	0,5m	SAL-12-FK4-0,5-9	43-01073	SAL-12-FK5-0,5-9	43-01075	SAL-12-FK8-0,5-9	43-01097
	0,5m			SAL-12-FK5.1-0,5-9	43-01074		
Accessories Please order separately		Counter nut	43-01156				

SAL M12x1 Connectors

Male socket with wire, frontmounting, M16x1,5-thread

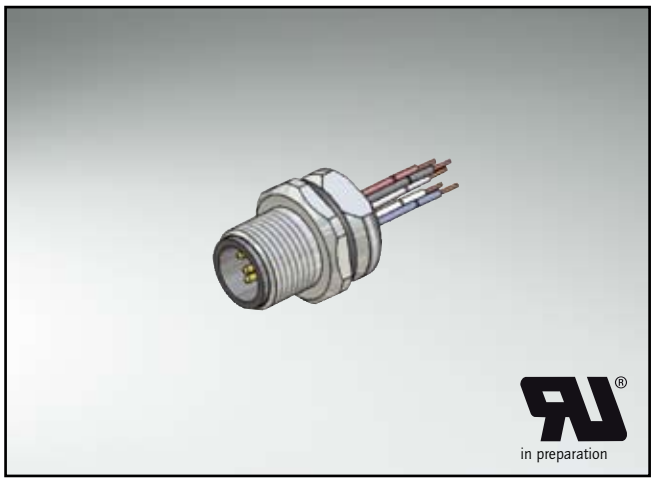

Technical Data

	4-pos	5-pos	8-pos
Rated voltage	250V	60V	30V

Current rating	4-/5-pos: 4A at +40°C 8-pos: 2A at +40°C
Pollution degree	3/2
Insulation resistance	=$10^9\Omega$
Degree of protection	IP67 in mated condition
Temperature range	-30°C to +85°C
Mating cycles	<=100

Directive 2002 95 EC „RoHS" Compliant

Pin configuration

4 - 5-pos

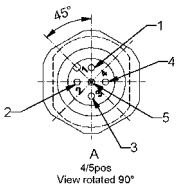

8-pos

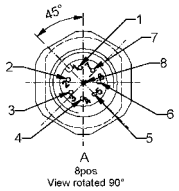

Contact assignment 4 - 5-pos

brown	1
white	2
blue	3
black	4
green-yellow	5

Contact assignment 5.1-pos

brown	1
white	2
blue	3
black	4
grey	5

Contact assignment 8-pos

white	1	grey	5
brown	2	pink	6
green	3	blue	7
yellow	4	red	8

Dimension drawing

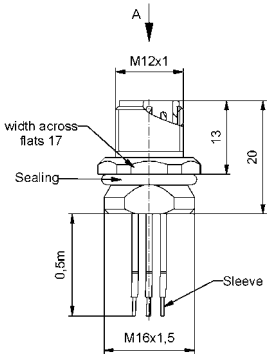

Cut-out front panel

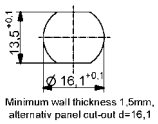

Order data

Wire	Length/L	Description	4-pos Part-no.	Description	5-pos Part-no.	Description	8-pos Part-no.
PVC, UL AWG 24	0,5m	SAL-12-FS4-0,5	43-01009	SAL-12-FS5-0,5	43-01010	SAL-12-FS8-0,5	43-01011
	0,5m			SAL-12-FS5.1-0,5	43-01049		
Accessories Please order separately		Counter nut	43-01155				

SAL M12x1 Connectors

Male socket with wire, frontmounting, PG9-thread

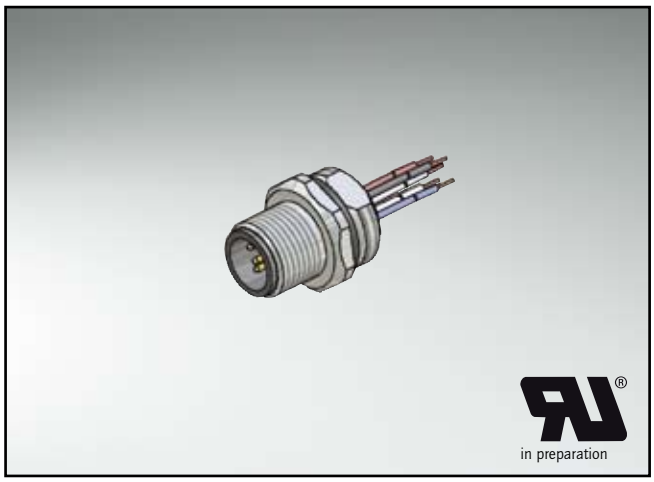

Technical Data

	4-pos	5-pos	8-pos
Rated voltage	250V	60V	30V

Current rating: 4-/5-pos: 4A at +40°C
8-pos: 2A at +40°C

Pollution degree: 3/2

Insulation resistance: =$10^9\Omega$

Degree of protection: IP67 in mated condition

Temperature range: -30°C to +85°C

Mating cycles: <=100

Directive 2002 95 EC „RoHS" Compliant

Pin configuration

4 - 5-pos

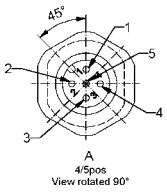

8-pos

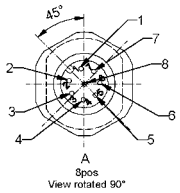

Contact assignment 4 - 5-pos

brown — 1
white — 2
blue — 3
black — 4
green-yellow — 5

Contact assignment 5.1-pos

brown — 1
white — 2
blue — 3
black — 4
grey — 5

Contact assignment 8-pos

white	1	grey	5
brown	2	pink	6
green	3	blue	7
yellow	4	red	8

Dimension drawing

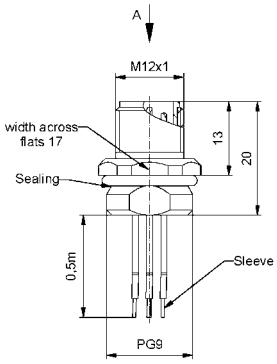

Cut-out front panel

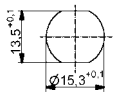

Minimum wall thickness 1,5mm, alternativ panel cut-out d=15,3

Order data

Wire	Length/L	Description	4-pos Part-no.	Description	5-pos Part-no.	Description	8-pos Part-no.
PVC, UL AWG 24	0,5m	SAL-12-FS4-0,5-9	43-01082	SAL-12-FS5-0,5-9	43-01084	SAL-12-FS8-0,5-9	43-01099
	0,5m			SAL-12-FS5.1-0,5-9	43-01083		
Accessories Please order separately		Counter nut	43-01156				

SAL M12x1 Connectors

Female socket with wire, frontmounting, positioning possible, M16x1,5-thread

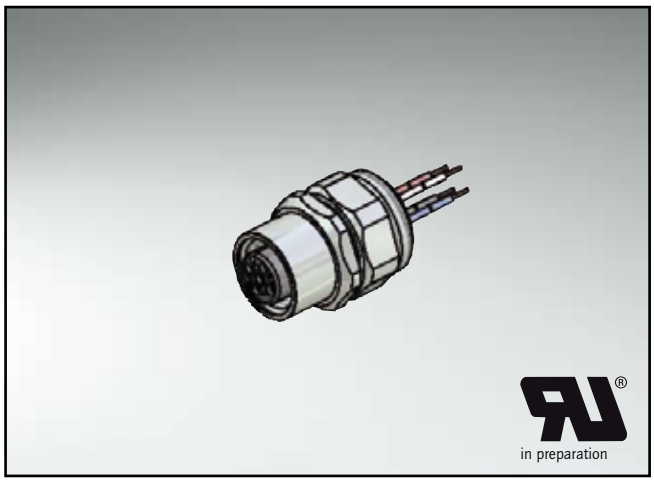

Technical Data

Rated voltage	4-pos	5-pos	8-pos
	250V	60V	30V
Current rating	4-/5-pos: 4A at +40°C 8-pos: 2A at +40°C		
Pollution degree	3/2		
Insulation resistance	$=10^9\Omega$		
Degree of protection	IP67 in mated condition		
Temperature range	-30°C to +85°C		
Mating cycles	<=100		

Directive 2002 95 EC „RoHS" Compliant

Pin configuration

4 - 5-pos

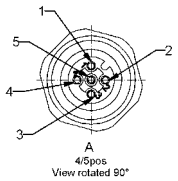

8-pos

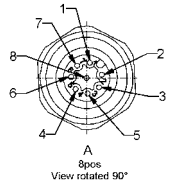

Contact assignment 4 - 5-pos

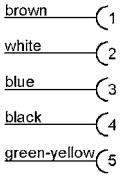

Contact assignment 5.1-pos

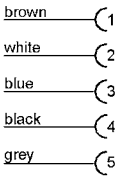

Contact assignment 8-pos

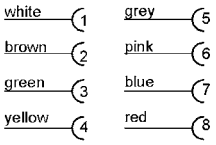

Dimension drawing

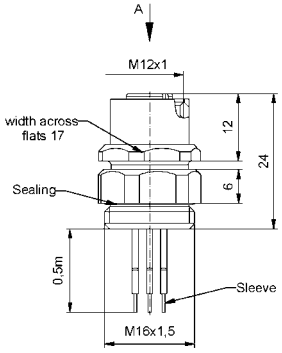

Order data

Wire	Length/L	Description	4-pos Part-no.	Description	5-pos Part-no.	Description	8-pos Part-no.
PVC, UL AWG 24	0,5m	SAL-12-FKP4-0,5	43-01006	SAL-12-FKP5-0,5	43-01007	SAL-12-FKP8-0,5	43-01008
				SAL-12-FKP5.1-0,5	43-01053		
Accessories Please order separately		Counter nut	43-01155				

SAL M12x1 Connectors

Female socket with wire, frontmounting, positioning possible, PG9-thread

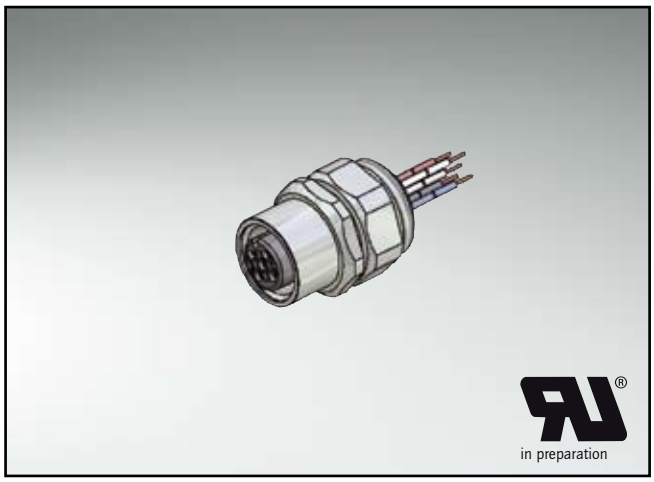

Technical Data

Rated voltage	4-pos	5-pos	8-pos
	250V	60V	30V
Current rating	4-/5-pos: 4A at +40°C 8-pos: 2A at +40°C		
Pollution degree	3/2		
Insulation resistance	$=10^9\Omega$		
Degree of protection	IP67 in mated condition		
Temperature range	-30°C to +85°C		
Mating cycles	<=100		

Directive 2002 95 EC „RoHS" Compliant

Pin configuration

4 - 5-pos

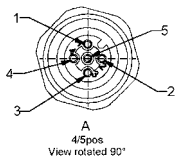

8-pos

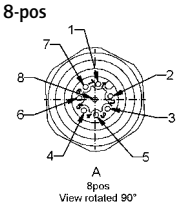

Contact assignment 4 - 5-pos

brown	1
white	2
blue	3
black	4
green-yellow	5

Contact assignment 5.1-pos

brown	1
white	2
blue	3
black	4
grey	5

Contact assignment 8-pos

white	1	grey	5
brown	2	pink	6
green	3	blue	7
yellow	4	red	8

Dimension drawing

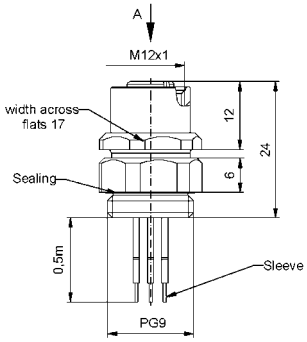

Order data

Wire	Length/L	Description	4-pos Part-no.	Description	5-pos Part-no.	Description	8-pos Part-no.
PVC, UL AWG 24	0,5m	SAL-12-FKP4-0,5-9	43-01091	SAL-12-FKP5-0,5-9	43-01093	SAL-12-FKP8-0,5-9	43-01101
				SAL-12-FKP5.1-0,5-9	43-01092		
Accessories Please order separately		Counter nut	43-01156				

SAL M12x1 Connectors

Male socket with wire, frontmounting, positioning possible, M16x1,5-thread

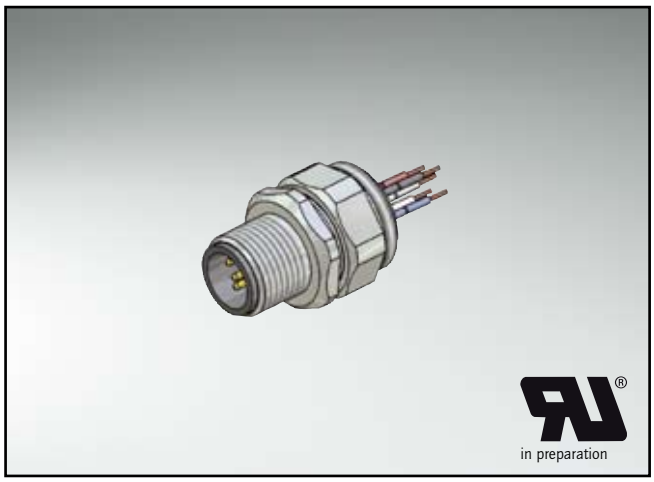

Technical Data

	4-pos	5-pos	8-pos
Rated voltage	250V	60V	30V

Current rating	4-/5-pos: 4A at +40°C 8-pos: 2A at +40°C
Pollution degree	3/2
Insulation resistance	=$10^9\Omega$
Degree of protection	IP67 in mated condition
Temperature range	-30°C to +85°C
Mating cycles	<=100

Directive 2002 95 EC „RoHS" Compliant

Pin configuration

4 - 5-pos

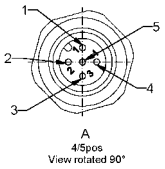

8-pos

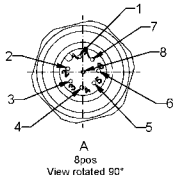

Contact assignment 4 - 5-pos

brown	1
white	2
blue	3
black	4
green-yellow	5

Contact assignment 5.1-pos

brown	1
white	2
blue	3
black	4
grey	5

Contact assignment 8-pos

white	1	grey	5
brown	2	pink	6
green	3	blue	7
yellow	4	red	8

Dimension drawing

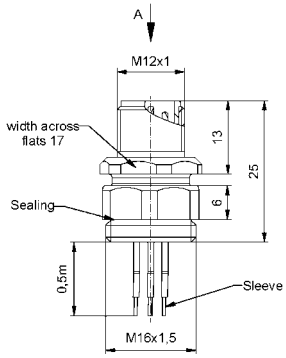

Order data

Wire	Length/L	Description	4-pos Part-no.	Description	5-pos Part-no.	Description	8-pos Part-no.
PVC, UL AWG 24	0,5m	SAL-12-FSP4-0,5	43-01015	SAL-12-FSP5-0,5	43-01016	SAL-12-FSP8-0,5	43-01017
				SAL-12-FSP5.1-0,5	43-01054		
Accessories Please order separately		Counter nut	43-01155				

SAL M12x1 Connectors

Male socket with wire, frontmounting, positioning possible, PG9-thread

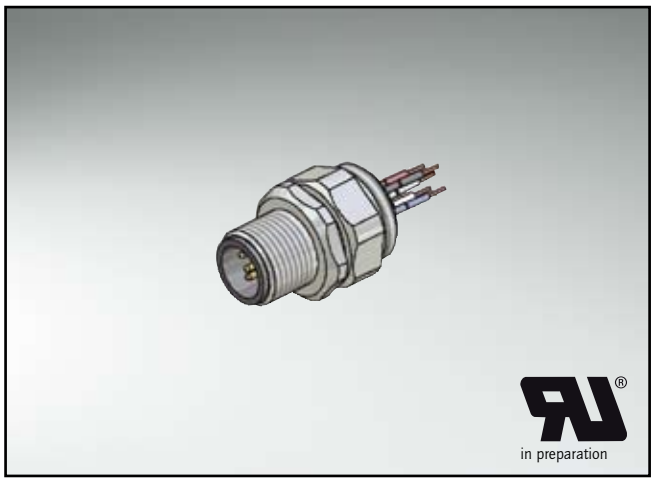

Technical Data

Rated voltage	4-pos	5-pos	8-pos
	250V	60V	30V
Current rating	4-/5-pos: 4A at +40°C 8-pos: 2A at +40°C		
Pollution degree	3/2		
Insulation resistance	$=10^9\Omega$		
Degree of protection	IP67 in mated condition		
Temperature range	-30°C to +85°C		
Mating cycles	<=100		

Directive 2002 95 EC „RoHS" Compliant

Pin configuration

4 - 5-pos

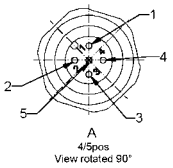

8-pos

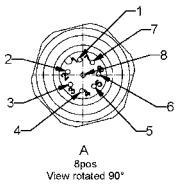

Contact assignment 4 - 5-pos

brown	1
white	2
blue	3
black	4
green-yellow	5

Contact assignment 5.1-pos

brown	1
white	2
blue	3
black	4
grey	5

Contact assignment 8-pos

white	1	grey	5
brown	2	pink	6
green	3	blue	7
yellow	4	red	8

Dimension drawing

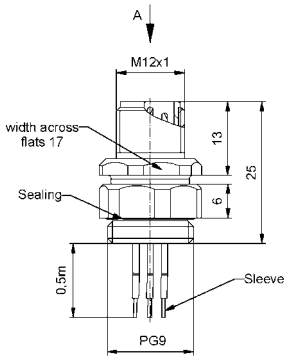

Order data

Wire	Length/L	Description	4-pos Part-no.	Description	5-pos Part-no.	Description	8-pos Part-no.
PVC, UL AWG 24	0,5m	SAL-12-FSP4-0,5-9	43-01094	SAL-12-FSP5-0,5-9	43-01096	SAL-12-FSP8-0,5-9	43-01102
				SAL-12-FSP5.1-0,5-9	43-01095		
Accessories Please order separately		Counter nut	43-01156				

SAL M12x1 Connectors

Female socket with wire, backmounting, M16x1,5-thread

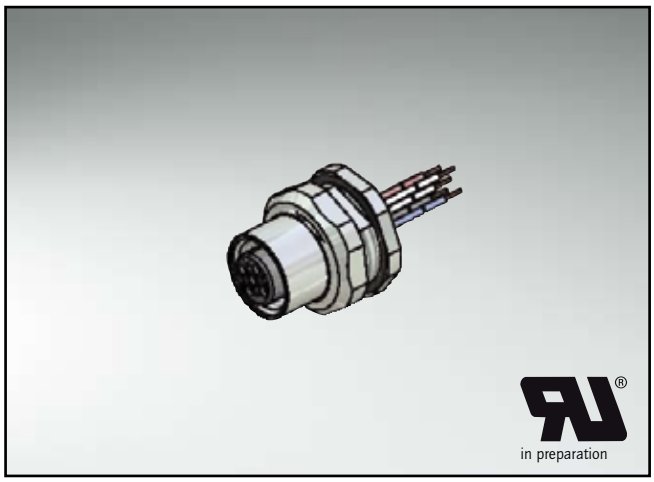

Technical Data

	4-pos	5-pos	8-pos
Rated voltage	250V	60V	30V

Current rating	4-/5-pos: 4A at +40°C 8-pos: 2A at +40°C
Pollution degree	3/2
Insulation resistance	=$10^9\Omega$
Degree of protection	IP67 in mated condition
Temperature range	-30°C to +85°C
Mating cycles	<=100

Directive 2002 95 EC „RoHS" Compliant

Pin configuration

4 - 5-pos

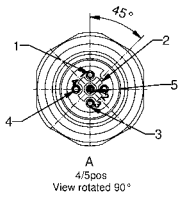

8-pos

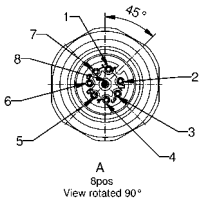

Contact assignment 4 - 5-pos

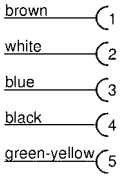

Contact assignment 5.1-pos

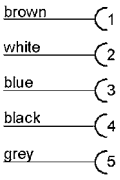

Contact assignment 8-pos

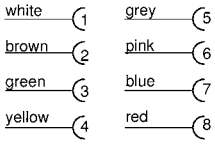

Dimension drawing

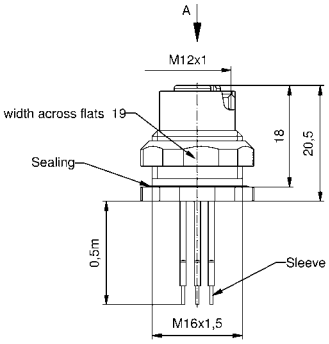

Cut-out front panel

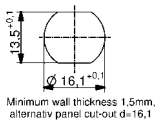

Order data

Wire	Length/L	Description	4-pos Part-no.	Description	5-pos Part-no.	Description	8-pos Part-no.
PVC, UL AWG 24	0,5m	SAL-12-FKH4-0,5	43-01003	SAL-12-FKH5-0,5	43-01004	SAL-12-FKH8-0,5	43-01005
	0,5m			SAL-12-FKH5.1-0,5	43-01048		

SAL M12x1 Connectors

Female socket with wire, backmounting, PG9-thread

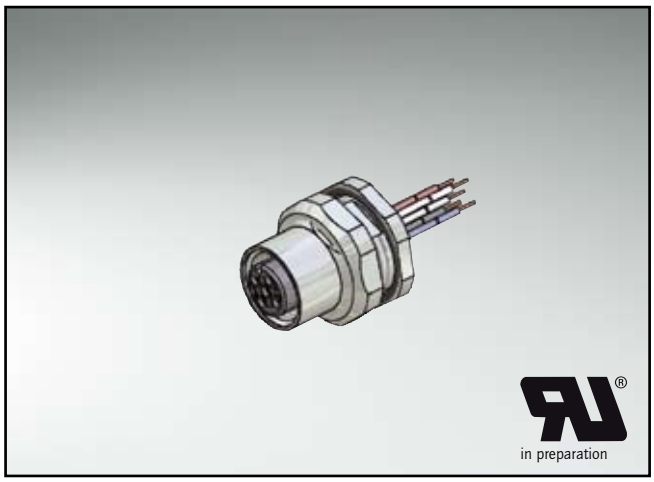

Technical Data

	4-pos	5-pos	8-pos
Rated voltage	250V	60V	30V

Current rating	4-/5-pos: 4A at +40°C 8-pos: 2A at +40°C
Pollution degree	3/2
Insulation resistance	=$10^9\Omega$
Degree of protection	IP67 in mated condition
Temperature range	-30°C to +85°C
Mating cycles	<=100

Directive 2002 95 EC „RoHS" Compliant

Pin configuration

4 - 5-pos

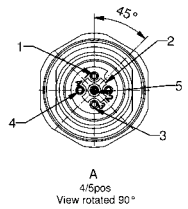

8-pos

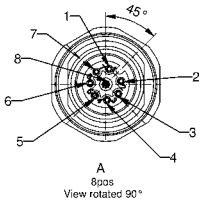

Contact assignment 4 - 5-pos

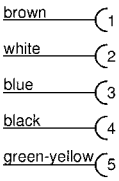

Contact assignment 5.1-pos

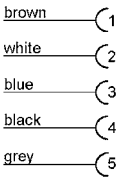

Contact assignment 8-pos

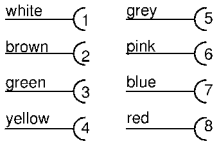

Dimension drawing

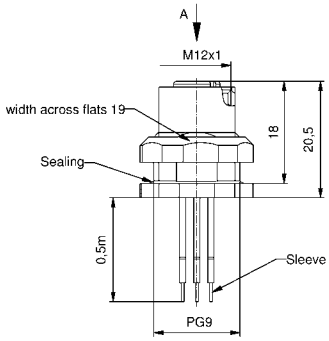

Cut-out front panel

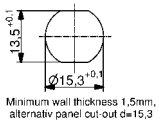

Order data

Wire	Length/L	Description	4-pos Part-no.	Description	5-pos Part-no.	Description	8-pos Part-no.
PVC, UL AWG 24	0,5m	SAL-12-FKH4-0,5-9	43-01079	SAL-12-FKH5-0,5-9	43-01081	SAL-12-FKH8-0,5-9	43-01098
	0,5m			SAL-12-FKH5.1-0,5-9	43-01080		

SAL M12x1 Connectors

Male socket with wire, backmounting, M16x1,5-thread

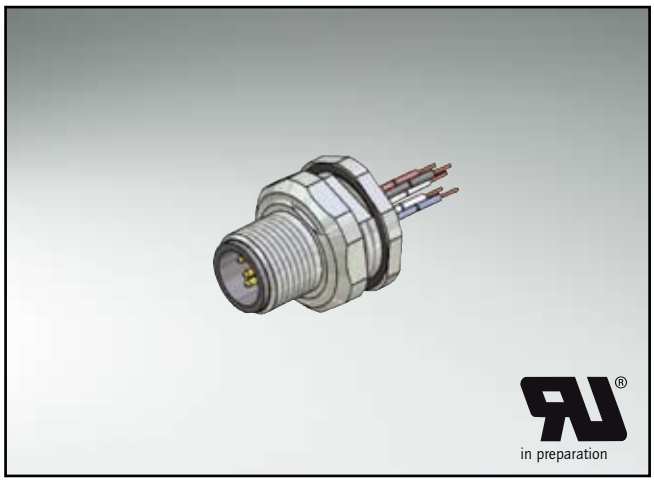

Technical Data

	4-pos	5-pos	8-pos
Rated voltage	250V	60V	30V

Current rating: 4-/5-pos: 4A at +40°C
8-pos: 2A at +40°C

Pollution degree: 3/2

Insulation resistance: =$10^9\Omega$

Degree of protection: IP67 in mated condition

Temperature range: -30°C to +85°C

Mating cycles: <=100

Directive 2002 95 EC „RoHS" Compliant

Pin configuration

4 - 5-pos

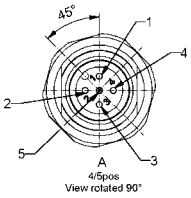

8-pos

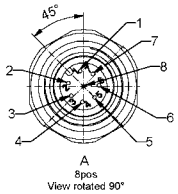

Contact assignment 4 - 5-pos

brown — 1
white — 2
blue — 3
black — 4
green-yellow — 5

Contact assignment 5.1-pos

brown — 1
white — 2
blue — 3
black — 4
grey — 5

Contact assignment 8-pos

white	1	grey	5
brown	2	pink	6
green	3	blue	7
yellow	4	red	8

Dimension drawing

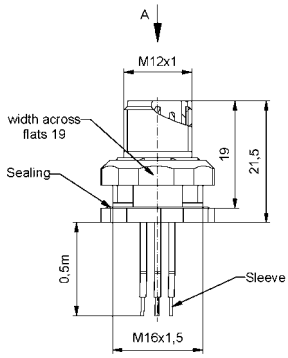

Cut-out front panel

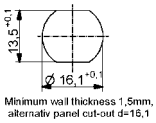

Order data

Wire	Length/L	Description	4-pos Part-no.	Description	5-pos Part-no.	Description	8-pos Part-no.
PVC, UL AWG 24	0,5m	SAL-12-FSH4-0,5	43-01012	SAL-12-FSH5-0,5	43-01013	SAL-12-FSH8-0,5	43-01014
	0,5m			SAL-12-FSH5.1-0,5	43-01052		

SAL M12x1 Connectors

Male socket with wire, backmounting, PG9-thread

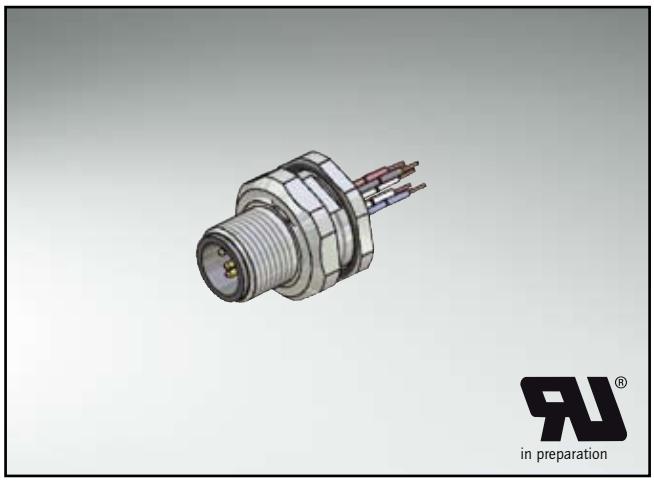

Technical Data

	4-pos	5-pos	8-pos
Rated voltage	250V	60V	30V

Current rating	4-/5-pos: 4A at +40°C 8-pos: 2A at +40°C
Pollution degree	3/2
Insulation resistance	=$10^9\Omega$
Degree of protection	IP67 in mated condition
Temperature range	-30°C to +85°C
Mating cycles	<=100

Directive 2002 95 EC „RoHS" Compliant

Pin configuration

4 - 5-pos

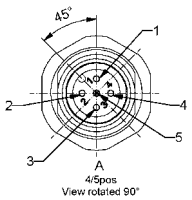

8-pos

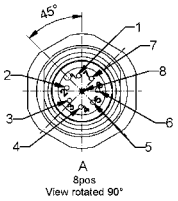

Contact assignment 4 - 5-pos

brown	1
white	2
blue	3
black	4
green-yellow	5

Contact assignment 5.1-pos

brown	1
white	2
blue	3
black	4
grey	5

Contact assignment 8-pos

white	1	grey	5
brown	2	pink	6
green	3	blue	7
yellow	4	red	8

Dimension drawing

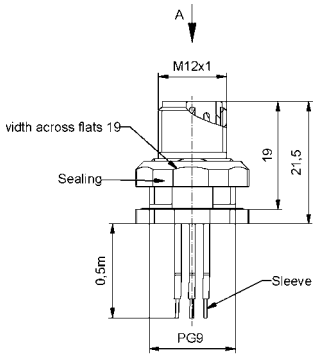

Cut-out front panel

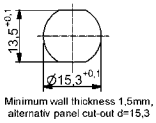

Order data

Wire	Length/L	Description	4-pos Part-no.	Description	5-pos Part-no.	Description	8-pos Part-no.
PVC, UL AWG 24	0,5m	SAL-12-FSH4-0,5-9	43-01088	SAL-12-FSH5-0,5-9	43-01090	SAL-12-FSH8-0,5-9	43-01100
	0,5m			SAL-12-FSH5.1-0,5-9	43-01089		

SAL M12x1 Connectors

Female socket dip-solder, backmounting, M16x-1,5-thread

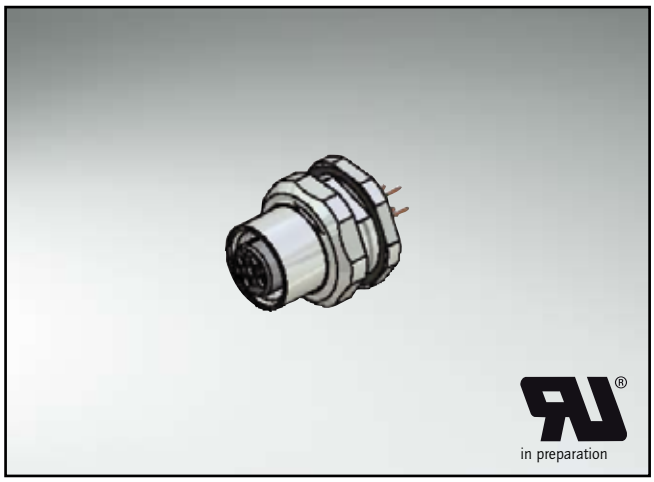

Technical Data

Rated voltage	4-pos	5-pos	8-pos
	250V	60V	30V
Current rating	4-/5-pos: 4A at +40°C 8-pos: 2A at +40°C		
Pollution degree	3/2		
Insulation resistance	$=10^9\Omega$		
Degree of protection	IP67 in mated condition		
Temperature range	-30°C to +85°C		
Mating cycles	<=100		

Directive 2002 95 EC „RoHS" Compliant

Pin configuration

4 - 5-pos

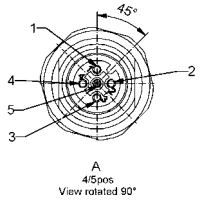

8-pos

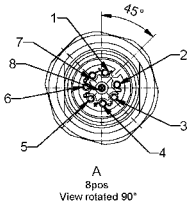

Cut-out front panel

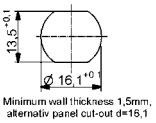

Dimension drawing

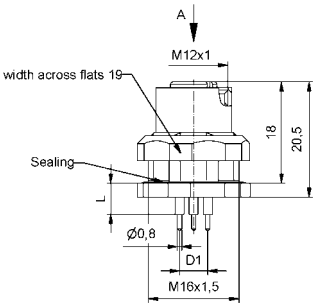

Order data

Length/L contacts	Description	4-pos Part-no.	Description	5-pos Part-no.	Description	8-pos Part-no.
5,5mm	SAL-12-FKH4-P5,5	43-01026	SAL-12-FKH5-P5,5	43-01027	SAL-12-FKH8-P5,5	43-01028
12mm	SAL-12-FKH4-P12	43-01029	SAL-12-FKH5-P12	43-01030	SAL-12-FKH8-P12	43-01031

SAL M12x1 Connectors

Female socket dip-solder, backmounting, PG9-thread

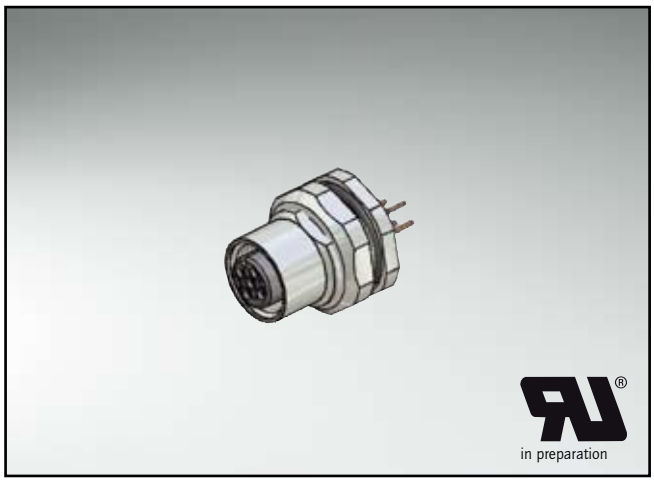

Technical Data

Rated voltage	4-pos	5-pos	8-pos
	250V	60V	30V
Current rating	4-/5-pos: 4A at +40°C 8-pos: 2A at +40°C		
Pollution degree	3/2		
Insulation resistance	$=10^9\Omega$		
Degree of protection	IP67 in mated condition		
Temperature range	-30°C to +85°C		
Mating cycles	<=100		

Directive 2002 95 EC „RoHS" Compliant

Pin configuration

4 - 5-pos

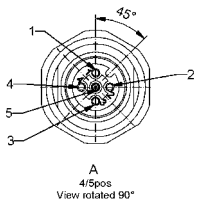

8-pos

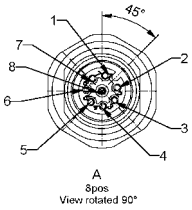

Cut-out front panel

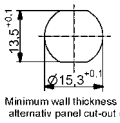

Dimension drawing

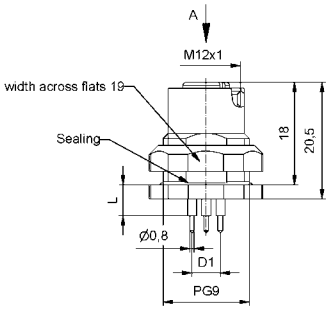

Order data

Length/L contacts	Description	4-pos Part-no.	Description	5-pos Part-no.	Description	8-pos Part-no.
5,5mm	SAL-12-FKH4-P5,5-9	43-01059	SAL-12-FKH5-P5,5-9	43-01061	SAL-12-FKH8-P5,5-9	43-01063
12mm	SAL-12-FKH4-P12-9	43-01060	SAL-12-FKH5-P12-9	43-01062	SAL-12-FKH8-P12-9	43-01064

SAL M12x1 Connectors

Male socket dip-solder, backmounting, M16x-1,5-thread

Technical Data

	4-pos	5-pos	8-pos
Rated voltage	250V	60V	30V

Current rating: 4-/5-pos: 4A at +40°C
8-pos: 2A at +40°C

Pollution degree: 3/2

Insulation resistance: =$10^9\Omega$

Degree of protection: IP67 in mated condition

Temperature range: -30°C to +85°C

Mating cycles: <=100

Directive 2002 95 EC „RoHS" Compliant

Pin configuration

4 - 5-pos

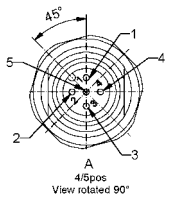

8-pos

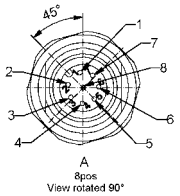

Cut-out front panel

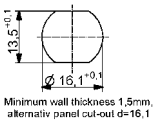

Dimension drawing

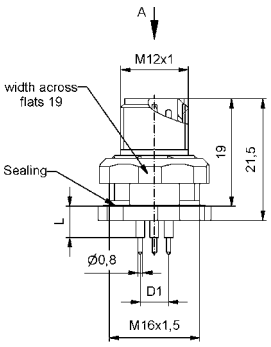

Order data

Length/L contacts	Description	4-pos Part-no.	Description	5-pos Part-no.	Description	8-pos Part-no.
5,5mm	SAL-12-FSH4-P5,5	43-01032	SAL-12-FSH5-P5,5	43-01033	SAL-12-FSH8-P5,5	43-01034
12mm	SAL-12-FSH4-P12	43-01035	SAL-12-FSH5-P12	43-01036	SAL-12-FSH8-P12	43-01037

SAL M12x1 Connectors

Male socket dip-solder, backmounting, PG9-thread

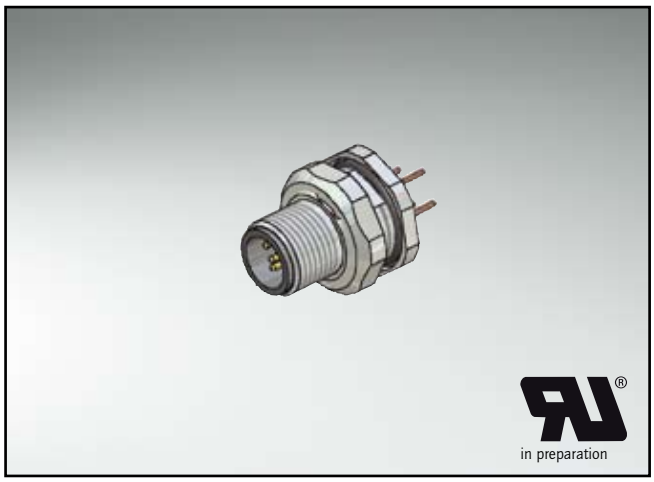

Technical Data

	4-pos	5-pos	8-pos
Rated voltage	250V	60V	30V

Current rating	4-/5-pos: 4A at +40°C 8-pos: 2A at +40°C
Pollution degree	3/2
Insulation resistance	=$10^9\Omega$
Degree of protection	IP67 in mated condition
Temperature range	-30°C to +85°C
Mating cycles	<=100

Directive 2002 95 EC „RoHS" Compliant

Pin configuration

4 - 5-pos

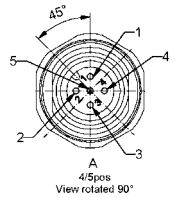

8-pos

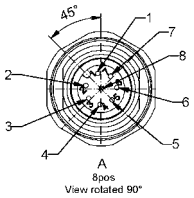

Cut-out front panel

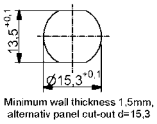

Dimension drawing

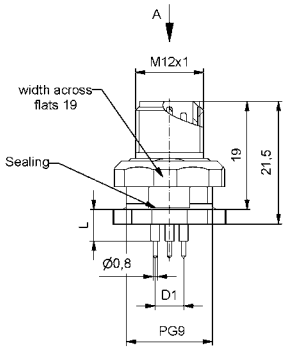

Order data

Length/L contacts	Description	4-pos Part-no.	Description	5-pos Part-no.	Description	8-pos Part-no.
5,5mm	SAL-12-FSH4-P5,5-9	43-01065	SAL-12-FSH5-P5,5-9	43-01069	SAL-12-FSH8-P5,5-9	43-01071
12mm	SAL-12-FSH4-P12-9	43-01066	SAL-12-FSH5-P12-9	43-01070	SAL-12-FSH8-P12-9	43-01072

SAL M12x1 Connectors

Female socket frontmounting, axial, installation height 5,5mm, optional with shroud

Technical Data

	4-pos	5-pos
Rated voltage	250V	60V
Current rating	4A at +40°C	
Pollution degree	3/2	
Insulation resistance	=$10^9\Omega$	
Degree of protection	IP67 in mated condition	
Temperature range	-30°C to +85°C	
Mating cycles	<=100	

Directive 2002 95 EC „RoHS" Compliant

Pin configuration

4 - 5-pos

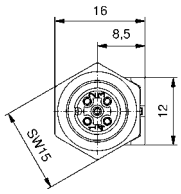

Hole pattern printing board

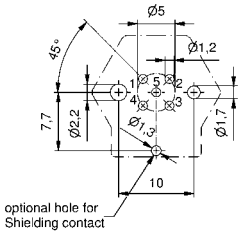

Dimension drawing

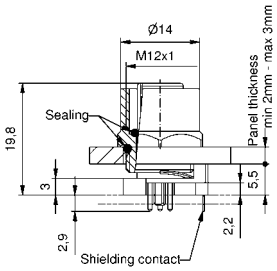

Screw-in thread

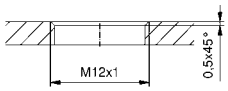

Order data

Installation height	Description	4-pos Part-no.	Description	5-pos Part-no.	
5,5mm	SAL-12-FK4-X5,5	43-01178	SAL-12-FK5-X5,5	43-01180	
5,5mm	SAL-12S-FK4-X5,5	43-01179	SAL-12S-FK5-X5,5	43-01181	with shroud

SAL M12x1 Connectors

Female socket frontmounting, axial, installation height 10mm, optional with shroud

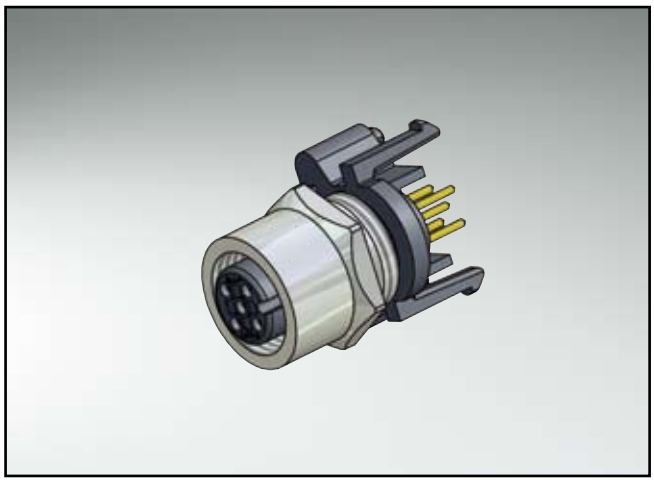

Technical Data

	4-pos	5-pos
Rated voltage	250V	60V
Current rating	4A at +40°C	
Pollution degree	3/2	
Insulation resistance	=$10^9\Omega$	
Degree of protection	IP67 in mated condition	
Temperature range	-30°C to +85°C	
Mating cycles	<=100	

Directive 2002 95 EC „RoHS" Compliant

Pin configuration

4 - 5-pos

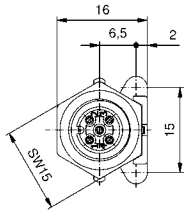

Hole pattern printing board

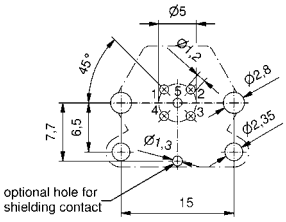

Dimension drawing

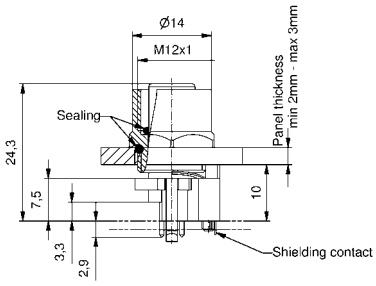

Screw-in thread

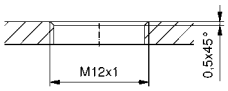

Order data

Installation height	Description	4-pos Part-no.	Description	5-pos Part-no.	
10mm	SAL-12-FK4-X10	43-01162	SAL-12-FK5-X10	43-01164	
10mm	SAL-12S-FK4-X10	43-01163	SAL-12S-FK5-X10	43-01165	with shroud

SAL M12x1 Connectors

Male socket frontmounting, axial, installation height 5,5mm, optional with shroud

Technical Data

	4-pos	5-pos
Rated voltage	250V	60V
Current rating	4A at +40°C	
Pollution degree	3/2	
Insulation resistance	=$10^9\Omega$	
Degree of protection	IP67 in mated condition	
Temperature range	-30°C to +85°C	
Mating cycles	<=100	

Directive 2002 95 EC
„RoHS"
Compliant

Pin configuration

4 - 5-pos

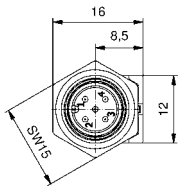

Hole pattern printing board

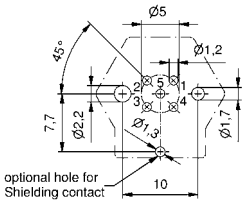

Dimension drawing

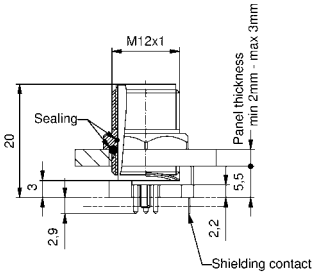

Screw-in thread

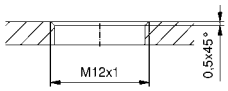

Order data

Installation height	Description	4-pos Part-no.	Description	5-pos Part-no.	
5,5mm	SAL-12-FS4-X5,5	43-01182	SAL-12-FS5.1-X5,5	43-01184	
5,5mm	SAL-12S-FS4-X5,5	43-01183	SAL-12S-FS5.1-X5,5	43-01185	with shroud

SAL M12x1 Connectors

Male socket frontmounting, axial, installation height 10mm, optional with shroud

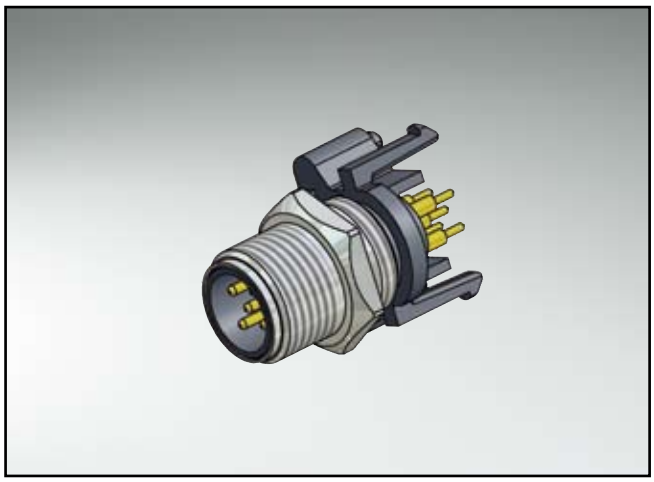

Technical Data

	4-pos	5-pos
Rated voltage	250V	60V
Current rating	4A at +40°C	
Pollution degree	3/2	
Insulation resistance	=$10^9\Omega$	
Degree of protection	IP67 in mated condition	
Temperature range	-30°C to +85°C	
Mating cycles	<=100	

Directive 2002 95 EC „RoHS" Compliant

Pin configuration

4 - 5-pos

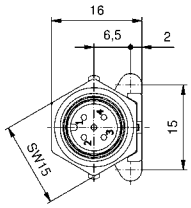

Hole pattern printing board

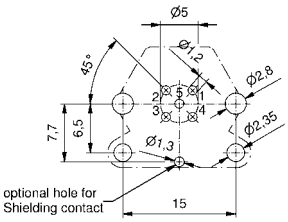

Dimension drawing

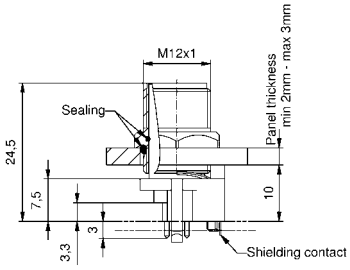

Screw-in thread

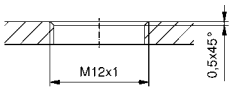

Order data

Installation height	Description	4-pos Part-no.	Description	5-pos Part-no.	
10mm	SAL-12-FS4-X10	43-01166	SAL-12-FS5.1-X10	43-01168	
10mm	SAL-12S-FS4-X10	43-01167	SAL-12S-FS5.1-X10	43-01169	with shroud

SAL M12x1 Connectors

Female socket backmounting, axial, installation height 5,5mm, optional with shroud

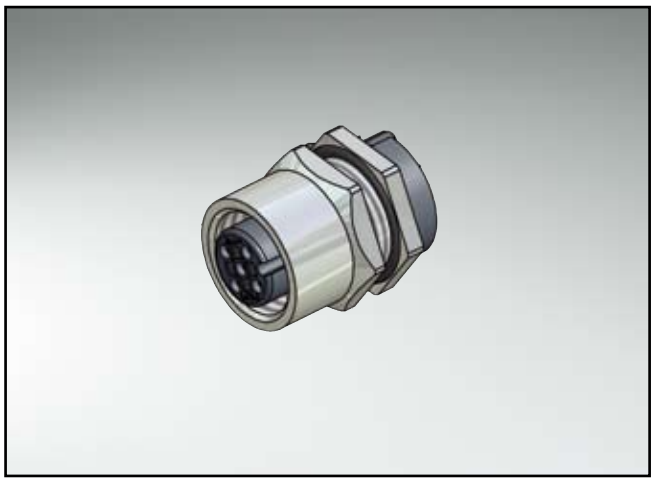

Technical Data

	4-pos	5-pos
Rated voltage	250V	60V
Current rating	4A at +40°C	
Pollution degree	3/2	
Insulation resistance	=$10^9\Omega$	
Degree of protection	IP67 in mated condition	
Temperature range	-30°C to +85°C	
Mating cycles	<=100	

Directive 2002 95 EC „RoHS" Compliant

Pin configuration

4 - 5-pos

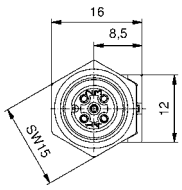

Hole pattern printing board

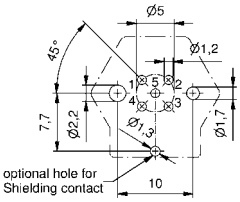

Dimension drawing

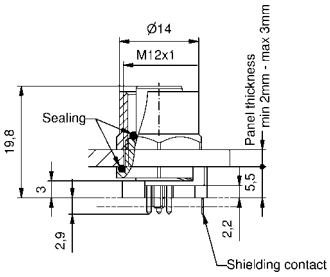

Feedthrough

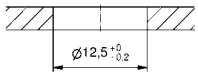

Order data

Installation height	Description	4-pos Part-no.	Description	5-pos Part-no.	
5,5mm	SAL-12-FKH4-X5,5	43-01186	SAL-12-FKH5-X5,5	43-01188	
5,5mm	SAL-12S-FKH4-X5,5	43-01187	SAL-12S-FKH5-X5,5	43-01189	with shroud

SAL M12x1 Connectors

Female socket backmounting, axial, installation height 10mm, optional with shroud

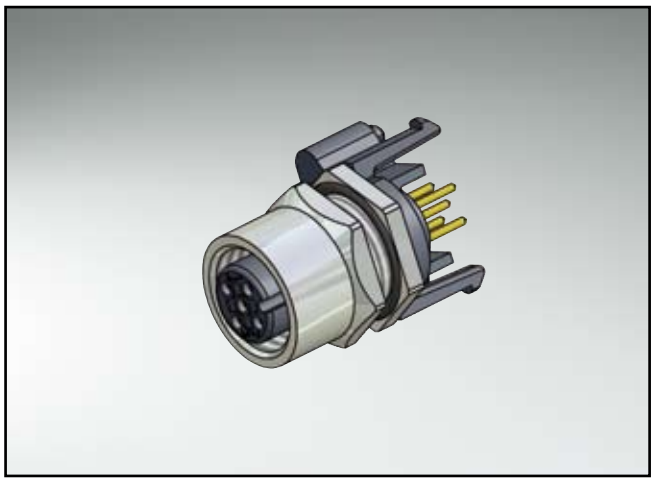

Technical Data

	4-pos	5-pos
Rated voltage	250V	60V
Current rating	4A at +40°C	
Pollution degree	3/2	
Insulation resistance	=$10^9\Omega$	
Degree of protection	IP67 in mated condition	
Temperature range	-30°C to +85°C	
Mating cycles	<=100	

Directive 2002 95 EC „RoHS" Compliant

Pin configuration

4 - 5-pos

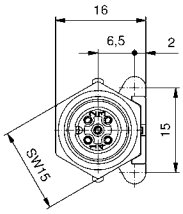

Hole pattern printing board

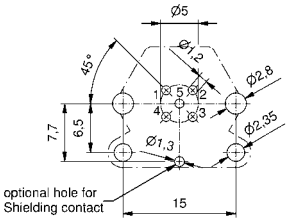

Dimension drawing

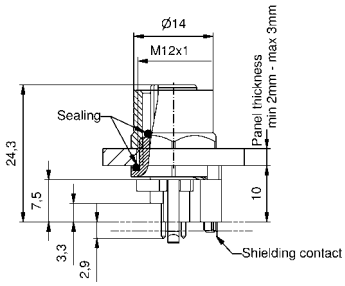

Feedthrough

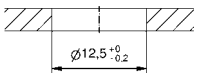

Order data

Installation height	Description	4-pos Part-no.	Description	5-pos Part-no.	
10mm	SAL-12-FKH4-X10	43-01170	SAL-12-FKH5-X10	43-01172	
10mm	SAL-12S-FKH4-X10	43-01171	SAL-12S-FKH5-X10	43-01173	with shroud

SAL M12x1 Connectors

Male socket backmounting, axial, installation height 5,5mm, optional with shroud

Technical Data

	4-pos	5-pos
Rated voltage	250V	60V
Current rating	4A at +40°C	
Pollution degree	3/2	
Insulation resistance	=$10^9\Omega$	
Degree of protection	IP67 in mated condition	
Temperature range	-30°C to +85°C	
Mating cycles	<=100	

Directive 2002 95 EC
„RoHS"
Compliant

Pin configuration

4 - 5-pos

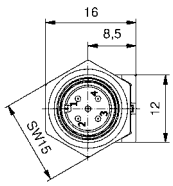

Hole pattern printing board

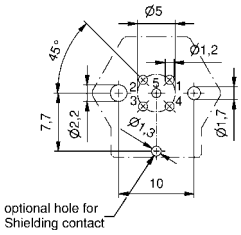

Dimension drawing

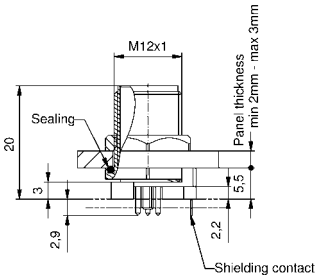

Feedthrough

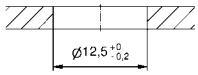

Order data

Installation height	Description	4-pos Part-no.	Description	5-pos Part-no.	
5,5mm	SAL-12-FSH4-X5,5	43-01190	SAL-12-FSH5.1-X5,5	43-01192	
5,5mm	SAL-12S-FSH4-X5,5	43-01191	SAL-12S-FSH5.1-X5,5	43-01193	with shroud

SAL M12x1 Connectors

Male socket backmounting, axial, installation height 10mm, optional with shroud

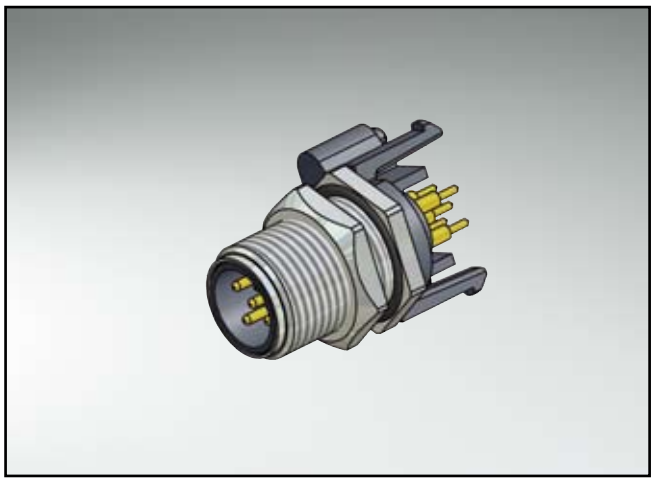

Technical Data

	4-pos	5-pos
Rated voltage	250V	60V
Current rating	4A at +40°C	
Pollution degree	3/2	
Insulation resistance	=$10^9\Omega$	
Degree of protection	IP67 in mated condition	
Temperature range	-30°C to +85°C	
Mating cycles	<=100	

Directive 2002 95 EC „RoHS" Compliant

Pin configuration

4 - 5-pos

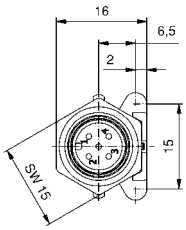

Hole pattern printing board

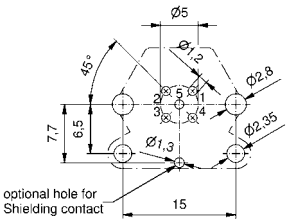

Dimension drawing

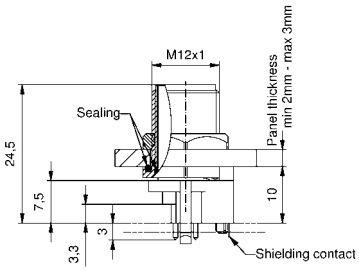

Feedthrough

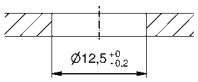

Order data

Installation height	Description	4-pos Part-no.	Description	5-pos Part-no.	
10mm	SAL-12-FSH4-X10	43-01174	SAL-12-FSH5.1-X10	43-01176	
10mm	SAL-12S-FSH4-X10	43-01175	SAL-12S-FSH5.1-X10	43-01177	with shroud

SAL M12x1 Connectors

Female socket frontmounting, dip-solder, angled, optional with shroud

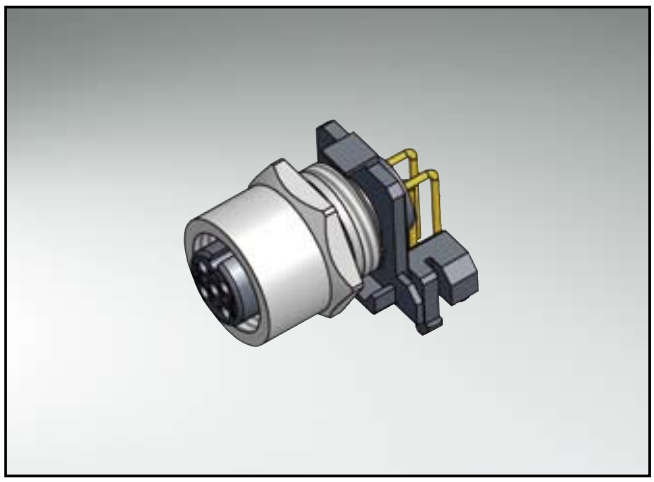

Technical Data

	4-pos	5-pos
Rated voltage	250V	60V
Current rating	4A at +40°C	
Pollution degree	3/2	
Insulation resistance	=$10^9\Omega$	
Degree of protection	IP67 in mated condition	
Temperature range	-30°C to +85°C	
Mating cycles	<=100	

Directive 2002 95 EC „RoHS" Compliant

Pin configuration

4 - 5-pos

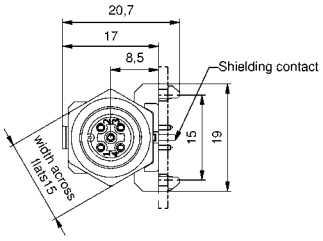

Hole pattern printing board

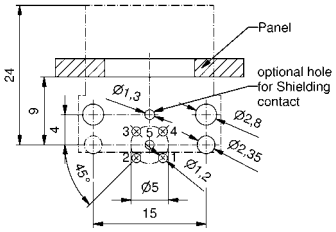

Dimension drawing

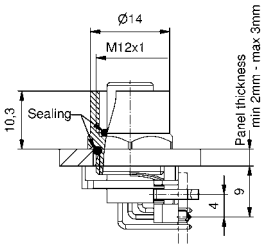

Screw-in thread

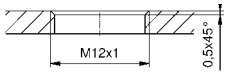

Order data

Description	4-pos Part-no.	Description	5-pos Part-no.	
SAL-12-FKW4	43-01200	SAL-12-FKW5	43-01202	
SAL-12S-FKW4	43-01201	SAL-12S-FKW5	43-01203	with shroud

SAL M12x1 Connectors

Male socket frontmounting, dip-solder, angled, optional with shroud

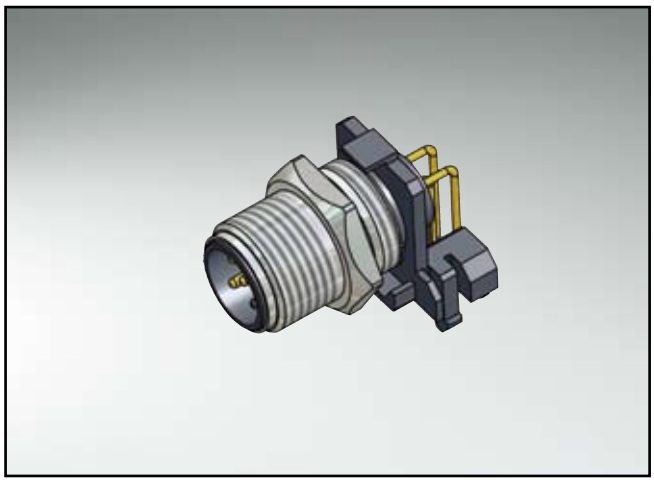

Technical Data

	4-pos	5-pos
Rated voltage	250V	60V
Current rating	4A at +40°C	
Pollution degree	3/2	
Insulation resistance	=$10^9\Omega$	
Degree of protection	IP67 in mated condition	
Temperature range	-30°C to +85°C	
Mating cycles	<=100	

Directive 2002 95 EC „RoHS" Compliant

Pin configuration

4 - 5-pos

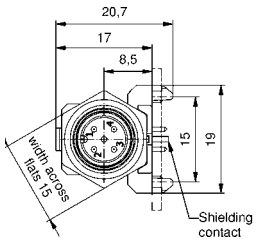

Hole pattern printing board

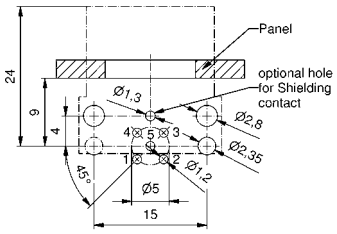

Dimension drawing

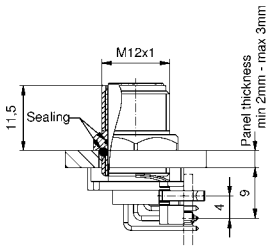

Screw-in thread

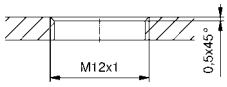

Order data

Description	4-pos Part-no.	Description	5-pos Part-no.	
SAL-12-FSW4	43-01208	SAL-12-FSW5.1	43-01210	
SAL-12S-FSW4	43-01209	SAL-12S-FSW5.1	43-01211	with shroud

SAL M12x1 Connectors

Female socket backmounting, dip-solder, angled, optional with shroud

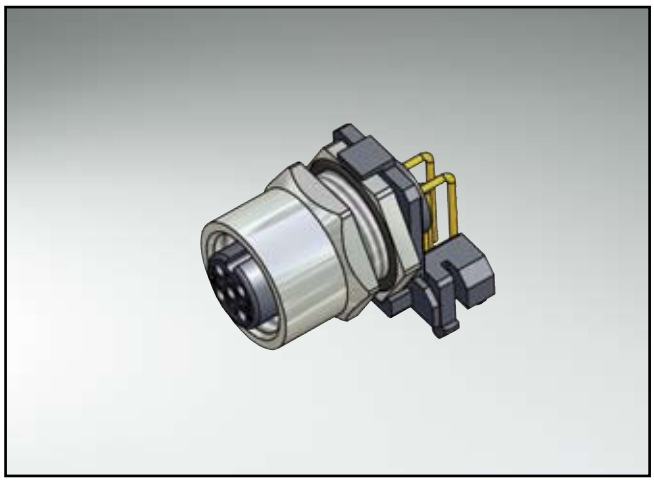

Technical Data

	4-pos	5-pos
Rated voltage	250V	60V
Current rating	4A at +40°C	
Pollution degree	3/2	
Insulation resistance	=$10^9\Omega$	
Degree of protection	IP67 in mated condition	
Temperature range	-30°C to +85°C	
Mating cycles	<=100	

Directive 2002 95 EC „RoHS" Compliant

Pin configuration

4 - 5-pos

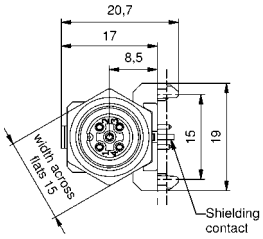

Hole pattern printing board

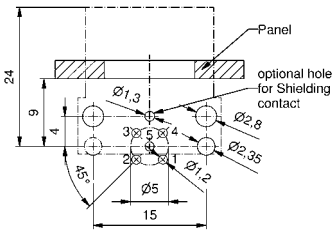

Dimension drawing

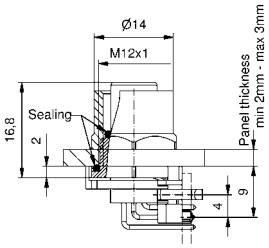

Feedthrough

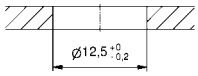

Order data

Description	4-pos Part-no.	Description	5-pos Part-no.	
SAL-12-FKHW4	43-01196	SAL-12-FKHW5	43-01198	
SAL-12S-FKHW4	43-01197	SAL-12S-FKHW5	43-01199	with shroud

SAL M12x1 Connectors

Male socket backmounting, dip-solder, angled, optional with shroud

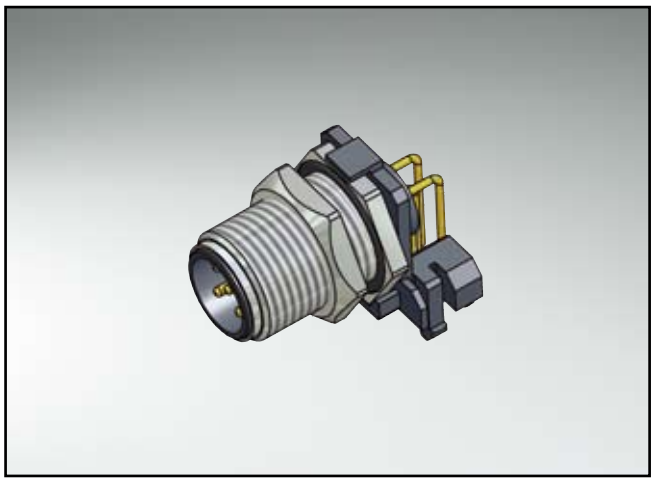

Technical Data

	4-pos	5-pos
Rated voltage	250V	60V
Current rating	4A at +40°C	
Pollution degree	3/2	
Insulation resistance	=$10^9\Omega$	
Degree of protection	IP67 in mated condition	
Temperature range	-30°C to +85°C	
Mating cycles	<=100	

Directive 2002 95 EC „RoHS" Compliant

Pin configuration

4 - 5-pos

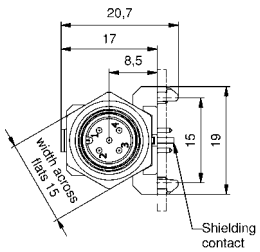

Hole pattern printing board

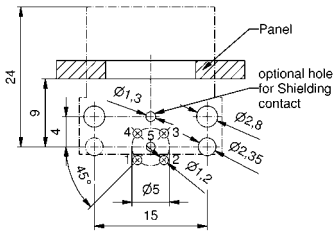

Dimension drawing

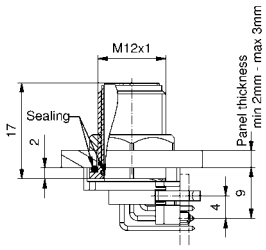

Feedthrough

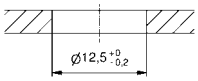

Order data

Description	4-pos Part-no.	Description	5-pos Part-no.	
SAL-12-FSHW4	43-01204	SAL-12-FSHW5.1	43-01206	
SAL-12S-FSHW4	43-01205	SAL-12S-FSHW5.1	43-01207	with shroud

Section 4
Junction systems

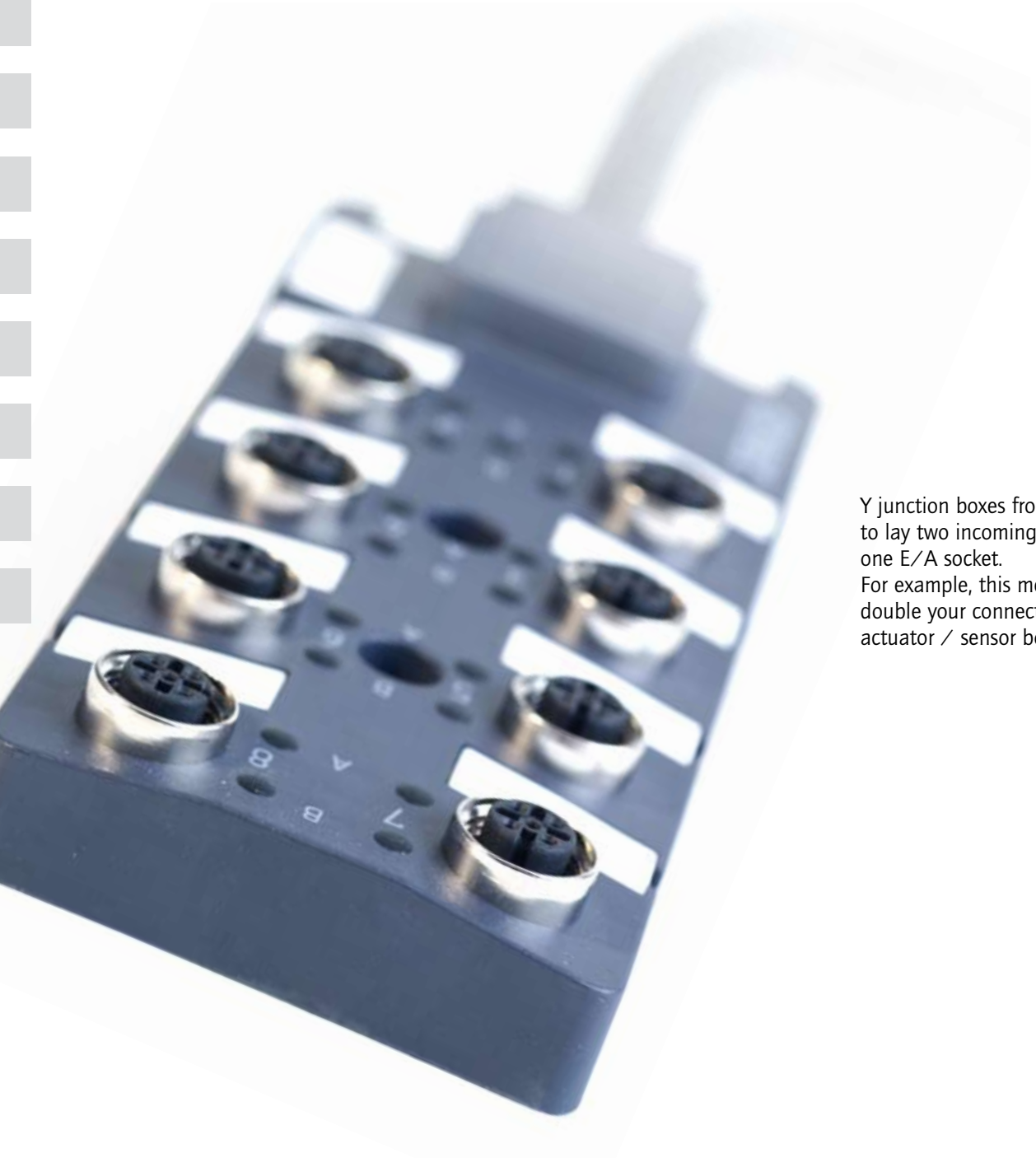

Y junction boxes from CONEC enable you to lay two incoming signals together at one E/A socket.
For example, this means that you can double your connection options for one actuator / sensor box.

You can connect up to 16 initiators using one M12x1 junction box with 8 E/A sockets. CONEC overmoulded components are also available for the output connection to the sensor.

This provides a cost-effective and practical wiring system in the field for sensors and actors with a cabling system that meets protection class IP 67. Junction boxes are used anywhere sensor and actor signals need to be extended quickly and easily for connection to their superordinate control systems. Individual signals are either connected directly to the superordinate system via a homerun cable or via a connection interface. Optional LED displays for signal and power reduce the effort required to track down errors.

SAL M12x1/M8x1 Y-Splitter

Nomenclature

S A L - 1 2 ■ - R S 5 - 1 2 ■ - 2 R K 3

SAL
Sensor Actor Line

Connection

Installation size
8 = M8x1
12 = M12x1

Coding
= A-coding

Building
R = Circular connector

Configuration
K = Female connector
S = Male connector

Number of poles
4 = 4-pos
5 = 5-pos

Allocation

Installation size
8 = M8x1
12 = M12x1

Coding
= A-coding

Quantity
2 = 2 I/O-ports

Building
R = Circular connector

Configuration
K = Female connector
S = Male connector

Number of poles
3 = 3-pos
4 = 4-pos
5 = 5-pos

SAL M12x1/M8x1 Y-Splitter

Technical Data

Basic material	
Contact	Female connector: CuZn / Male connector: CuSn (depending on configuration)
Contact plating	Nickel-plated, gold-plated
Contact carrier	TPU
Moulding body	TPU
Sealing	FPM

Information on the following pages are basing on below mentioned IEC-standards.

Rated voltage	IEC 61076-2-101
Current rating	IEC 61076-2-101
Insulation resistance	IEC 60512-2
Pollution degree	IEC 60664-1
Degree of protection	IEC 60529
Temperature range	IEC 60664-1
Mating cycles	IEC 61076-2-101

Technical subject to change without notice.

SAL M12x1/M8x1 Junction box

Nomenclature

S A L - 1 2 ■ - 4 F K 5 - 5 L - 5 / K 3

SAL
Sensor Actor Line

Connection

Installation size
12 = M12x1
8 = M8x1

Coding
= A-coding

Quantity I/O-ports
4 = 4-fold Junction box
8 = 8-fold Junction box

Building
F = Socket

Configuration
K = Female connector

Allocation

Number of poles
5 = I/O-port 4-pos + Ground (M12x1)
3 = I/O-port 3-pos (M8x1)
4 = I/O-port 4-pos (M8x1)

LED-display
5 = 5 LED-display
9 = 9 LED-display
17 = 17 LED-display

Cable length
5 = 5m Cable length
10 = 10m Cable length

Cable quality/Connection
= M23x1 connector (M12x1-Junction box)
= M16x0,75 connector (M8x1-Junction box, 8-fold)
= M12x1 connector (M8x1-Junction box, 4-fold)
K3 = TPU, black, UL

SAL M12x1/M8x1 Junction box

Technical Data

Basic material	
Contact	M12x1: CuSn6, M8x1: CuZn
Contact plating	Nickel-plated, gold-plated
Contact carrier	PBT, UL94
Housing	PBT, UL94
Sealing	FPM
Grouting	Polyurethane-resin, UL94

Information on the following pages are basing on below mentioned IEC-standards.

Rated voltage	IEC 61076-2-101
Current rating	IEC 61076-2-101
Insulation resistance	IEC 60512-2
Pollution degree	IEC 60664-1
Degree of protection	IEC 60529
Temperature range	IEC 60664-1
Mating cycles	IEC 61076-2-101

Technical subject to change without notice.

SAL-Y-Splitter

Male connector M12x1 - 2x Female connector M12x1

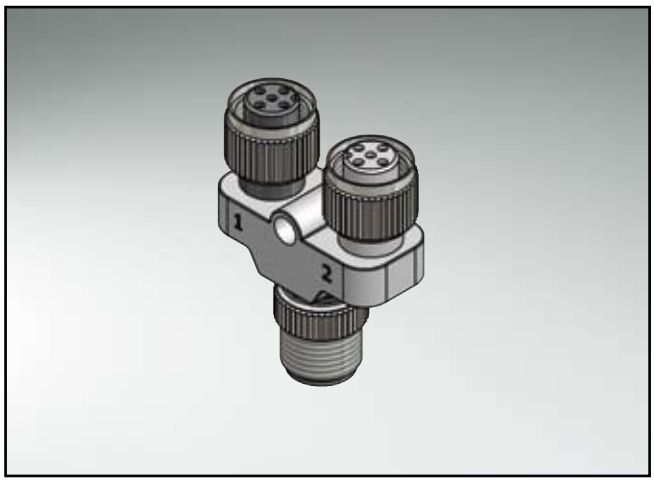

Technical Data

Rated voltage	5-pos 30V
Current rating	4A at +40°C
Pollution degree	3/2
Insulation resistance	=$10^9\Omega$
Degree of protection	IP67 in mated condition
Temperature range	-30°C to +85°C
Mating cycles	<=100

Directive 2002 95 EC
„RoHS"
Compliant

Pin configuration

5-pos male

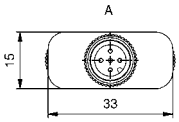

5-pos female

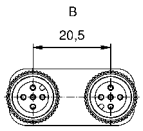

Contact assignment 5-pos

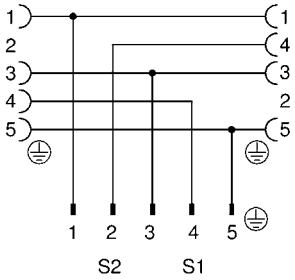

Dimension drawing

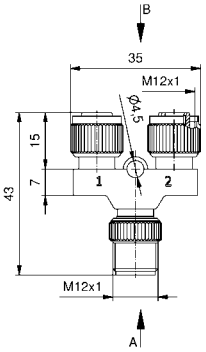

Order data

Description	5-pos Part-no.
SAL-12-RS5-2RK5.2	43-05101

SAL-Y-Splitter

Male connector M12x1 - 2x Female connector M8x1

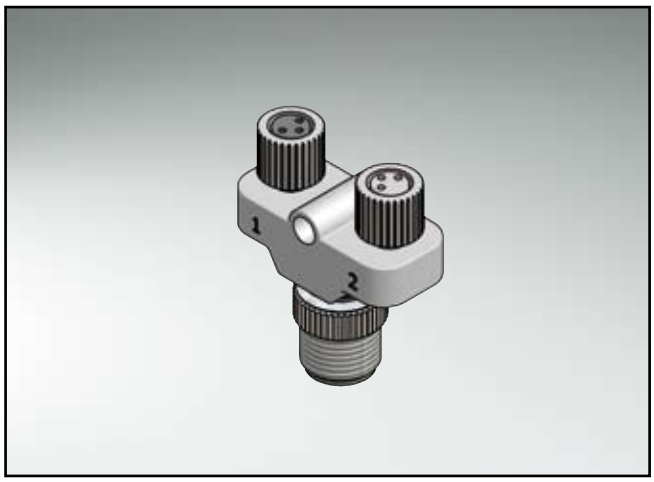

Technical Data

Rated voltage	4/3-pos 30V
Current rating	4A at +40°C
Pollution degree	3/2
Insulation resistance	=$10^9\Omega$
Degree of protection	IP67 in mated condition
Temperature range	-30°C to +85°C
Mating cycles	<=100

Directive 2002 95 EC
„RoHS"
Compliant

Pin configuration

4-pos male

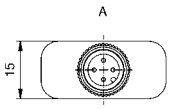

3-pos female

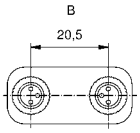

Contact assignment 4/3-pos

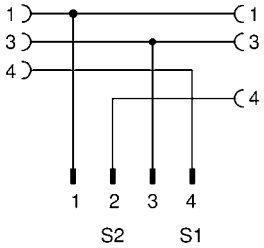

Dimension drawing

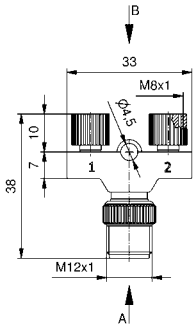

Order data

Description	4/3-pos Part-no.
SAL-12-RS4-8-2RK3	43-05100

SAL-Y-SPLITTER

Male connector M12x1 - 2x Female connector M12x1

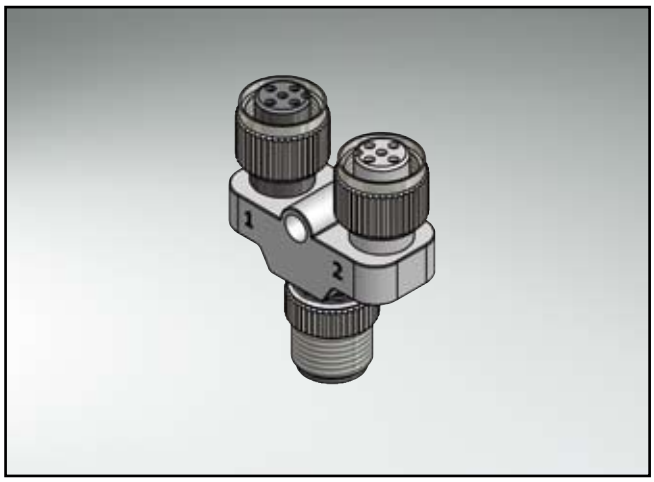

TECHNICAL DATA

Rated voltage	5-pos / 30V
Current rating	4A at +40°C
Pollution degree	3/2
Insulation resistance	=$10^9\Omega$
Degree of protection	IP67 in mated condition
Temperature range	-30°C to +85°C
Mating cycles	<=100

Directive 2002 95 EC „RoHS" Compliant

PIN CONFIGURATION

5-pos male

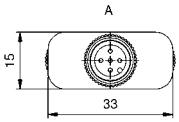

5-pos female

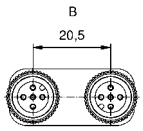

CONTACT ASSIGNMENT 5-POS

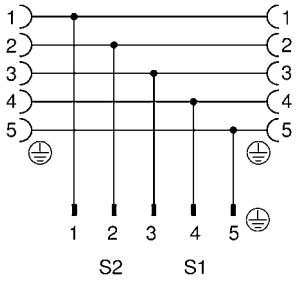

DIMENSION DRAWING

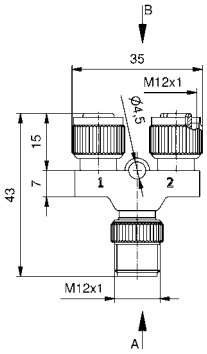

ORDER DATA

Description	5-pos Part-no.
SAL-12-RS5-2RK5	43-05103

Sensor - Actuator - Junction box

4-fold Junction box with homerun-cable, I/O-ports 4-pos + Ground

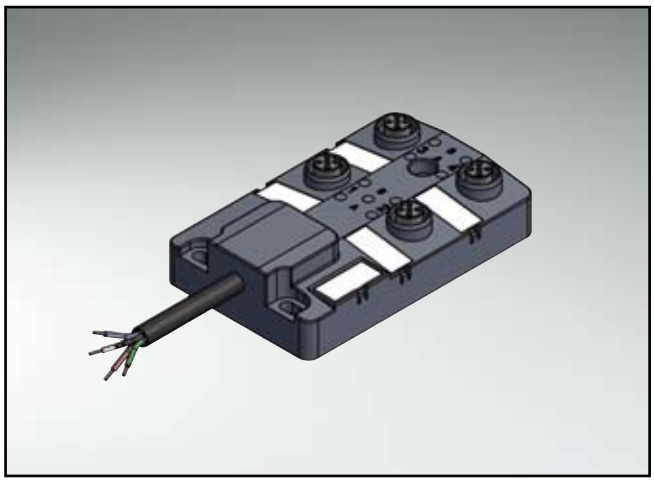

Technical Data

Rated voltage	4-pos + Ground max. 30V
Current rating	2A per signal contact Total ampacity max. 12A
Pollution degree	3/2
Insulation resistance	=$10^9\Omega$
Degree of protection	IP67 in mated condition
Temperature range	-5°C to +60°C
Mating cycles	<=100

Directive 2002 95 EC „RoHS" Compliant

Contact assignment 4-pos + Ground

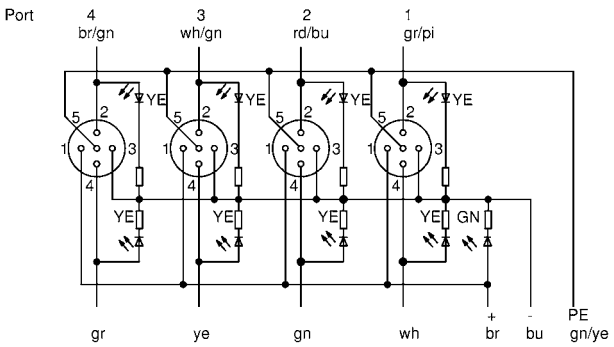

Dimension drawing

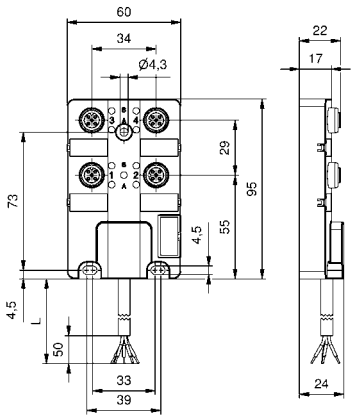

Order data

Cable	Length/L	Description	4-pos + Ground Part-no.
TPU, halogenfree black, Li9YH11YH 8x0,34/3x1,0 mm²	5m	SAL-12-4FK5-9L-5/K3	43-05010
	10m	SAL-12-4FK5-9L-10/K3	43-05011

SENSOR - ACTUATOR - JUNCTION BOX

8-fold Junction box with homerun-cable, I/O-ports 4-pos + Ground

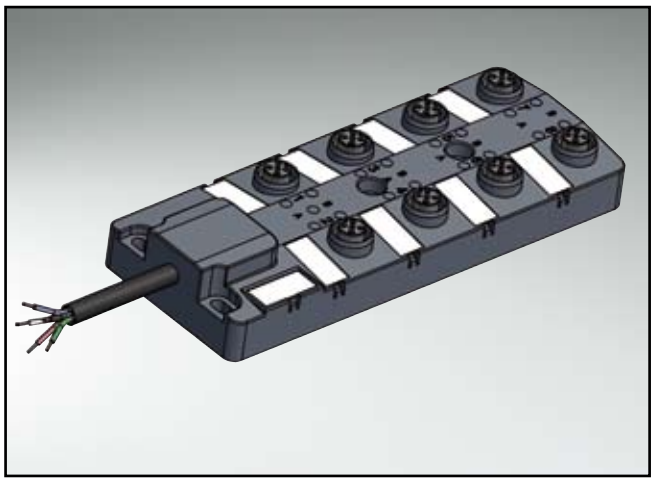

TECHNICAL DATA

Rated voltage	4-pos + Ground max. 30V
Current rating	2A per signal contact Total ampacity max. 12A
Pollution degree	3/2
Insulation resistance	=$10^9\Omega$
Degree of protection	IP67 in mated condition
Temperature range	-5°C to +60°C
Mating cycles	<=100

Directive 2002 95 EC „RoHS" Compliant

CONTACT ASSIGNMENT 4-POS + GROUND

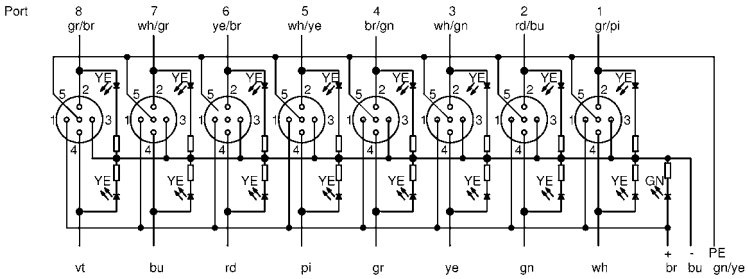

DIMENSION DRAWING

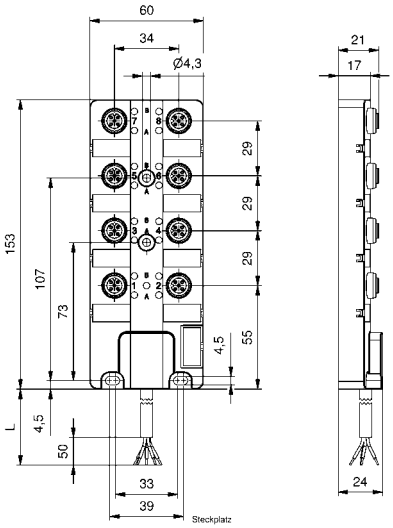

ORDER DATA

Cable	Length/L	Description	4-pos + Ground Part-no.
TPU, halogenfree black, Li9YH11YH 16x0,34/3x1,0 mm²	5m	SAL-12-8FK5-17L-5/K3	43-05012
	10m	SAL-12-8FK5-17L-10/K3	43-05013

SENSOR - ACTUATOR - JUNCTION BOX

4-fold Junction box, with M23x1- connector, I/O-ports 4-pos + Ground

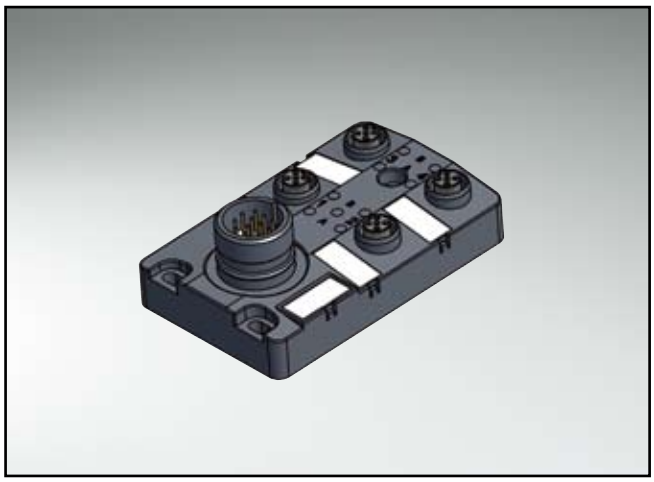

TECHNICAL DATA

Rated voltage	4 pos + Ground max. 30V
Current rating	2A per signal contact Total ampacity max. 12A
Pollution degree	3/2
Insulation resistance	=$10^9\Omega$
Degree of protection	IP67 in mated condition
Temperature range	-5°C to +60°C
Mating cycles	<=100

Directive 2002 95 EC „RoHS" Compliant

PIN CONFIGURATION M23

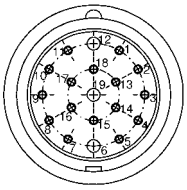

CONTACT ASSIGNMENT 4-POS + GROUND

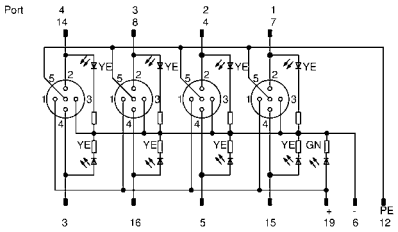

DIMENSION DRAWING

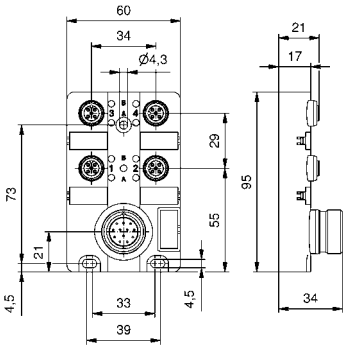

ORDER DATA

Description	4-pos + Ground Part-no.
SAL-12-4FK5-9L	43-05014

SENSOR - ACTUATOR - JUNCTION BOX

8-fold Junction box, with M23x1-connector, I/O-ports 4-pos + Ground

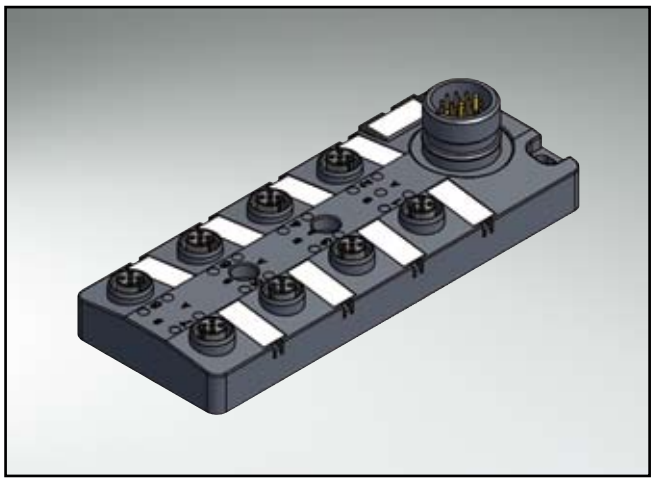

TECHNICAL DATA

Rated voltage	4-pos + Ground max. 30V
Current rating	2A per signal contact Total ampacity max. 12A
Pollution degree	3/2
Insulation resistance	=$10^9\Omega$
Degree of protection	IP67 in mated condition
Temperature range	-5°C to +60°C
Mating cycles	<=100

Directive 2002 95 EC „RoHS" Compliant

PIN CONFIGURATION M23

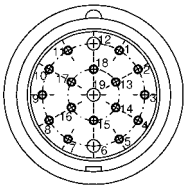

CONTACT ASSIGNMENT 4-POS + GROUND

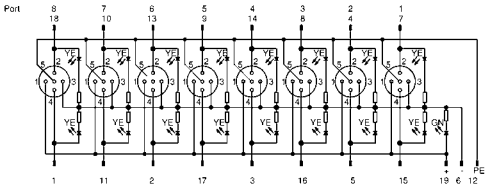

DIMENSION DRAWING

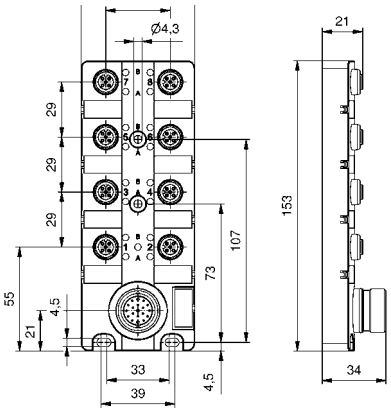

ORDER DATA

Description	4-pos + Ground Part-no.
SAL-12-8FK5-17L	43-05015

SENSOR - ACTUATOR - JUNCTION BOX

4-fold Junction box with homerun-cable, I/O-ports 3-pos

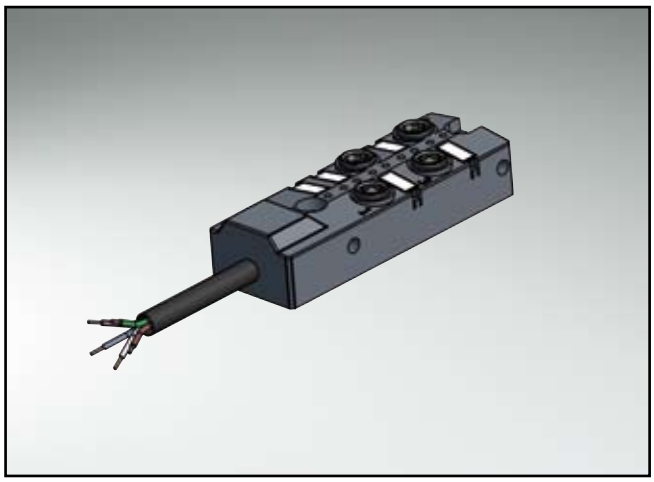

TECHNICAL DATA

Rated voltage	max. 30 V
Current rating	2A per signal contact Total ampacity max. 6A
Pollution degree	3/2
Insulation resistance	=$10^9\Omega$
Degree of protection	IP67 in mated condition
Temperature range	-5°C to +60°C
Mating cycles	<=100

Directive 2002 95 EC
„RoHS"
Compliant

CONTACT ASSIGNMENT 3-POS

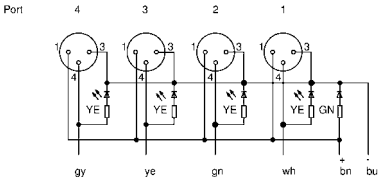

DIMENSION DRAWING

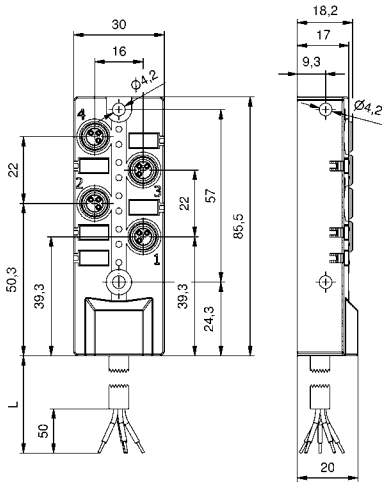

ORDER DATA

Cable	Length/L	Description	3-pos Part-no.
TPU, halogenfree black, Li9YH11YH 2x0,75mm/4x0,34mm²	5m	SAL-8-4FK3-5L-5/K3	42-05006
	10m	SAL-8-4FK3-5L-10/K3	42-05007

SENSOR - ACTUATOR - JUNCTION BOX

8-fold Junction box with homerun-cable, I/O-ports 3-pos

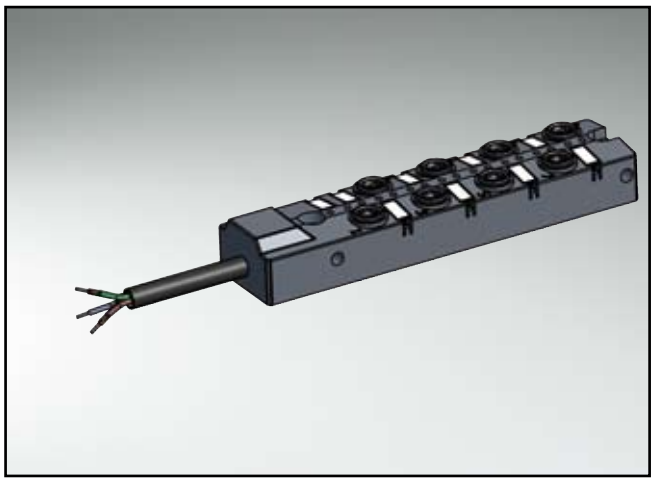

TECHNICAL DATA

Rated voltage	max. 30 V
Current rating	2A per signal contact Total ampacity max. 6A
Pollution degree	3/2
Insulation resistance	=$10^9\Omega$
Degree of protection	IP67 in mated condition
Temperature range	-5°C to +60°C
Mating cycles	<=100

Directive 2002 95 EC
„RoHS"
Compliant

CONTACT ASSIGNMENT 3-POS

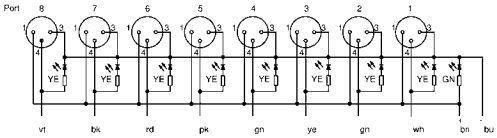

DIMENSION DRAWING

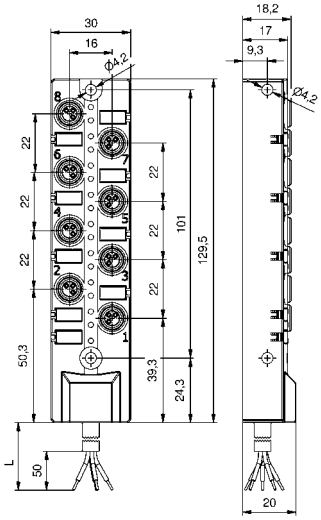

ORDER DATA

Cable	Length/L	Description	3-pos Part-no.
TPU, halogenfree black, Li9YH11YH 2x0,75/8x0,34mm²	5m	SAL-8-8FK3-9L-5/K3	42-05008
	10m	SAL-8-8FK3-9L-10/K3	42-05009

SENSOR - ACTUATOR - JUNCTION BOX

4-fold Junction box with homerun-cable, I/O-ports 4-pos

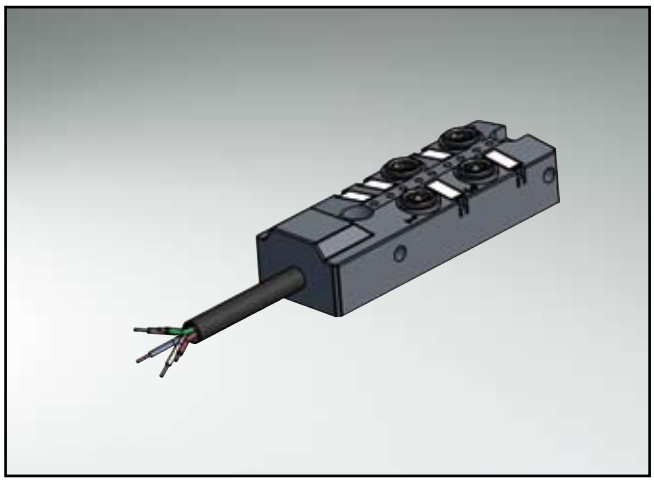

TECHNICAL DATA

Rated voltage	max. 30 V
Current rating	2A per signal contact Total ampacity max. 6A
Pollution degree	3/2
Insulation resistance	=$10^9\Omega$
Degree of protection	IP67 in mated condition
Temperature range	-5°C to +60°C
Mating cycles	<=100

Directive 2002 95 EC
„RoHS"
Compliant

CONTACT ASSIGNMENT 4-POS

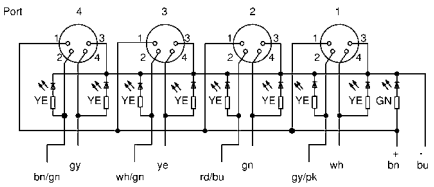

DIMENSION DRAWING

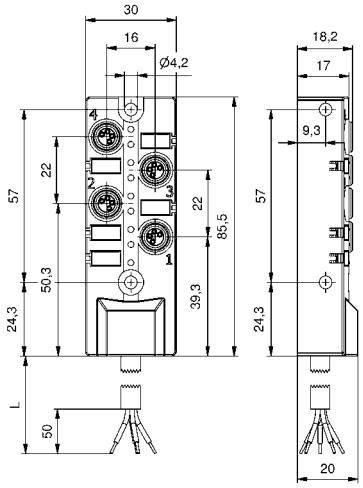

ORDER DATA

Cable	Length/L	Description	4-pos Part-no.
TPU, halogenfree black, Li9YH11YH 2x0,75/8x0,34mm²	5m	SAL-8-4FK4-9L-5/K3	42-05000
	10m	SAL-8-4FK4-9L-10/K3	42-05001

SENSOR - ACTUATOR - JUNCTION BOX

8-fold Junction box with homerun-cable, I/O-ports 4-pos

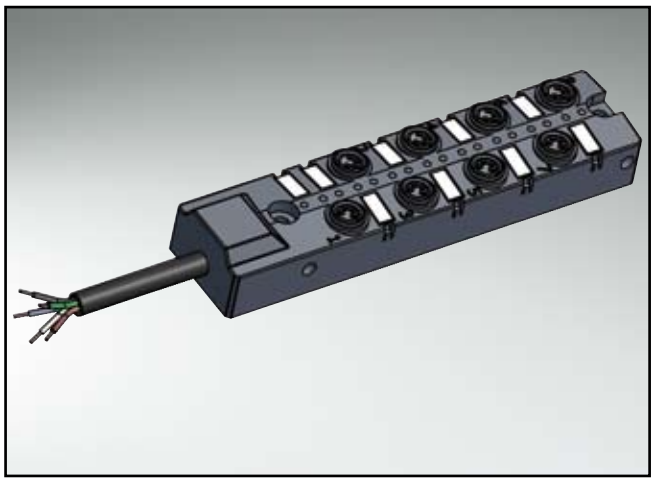

TECHNICAL DATA

Rated voltage	max. 30 V
Current rating	2A per signal contact Total ampacity max. 6A
Pollution degree	3/2
Insulation resistance	=$10^9\Omega$
Degree of protection	IP67 in mated condition
Temperature range	-5°C to +60°C
Mating cycles	<=100

Directive 2002 95 EC
„RoHS"
Compliant

CONTACT ASSIGNMENT 4-POS

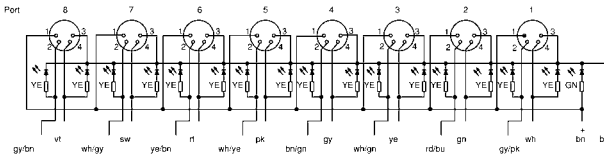

DIMENSION DRAWING

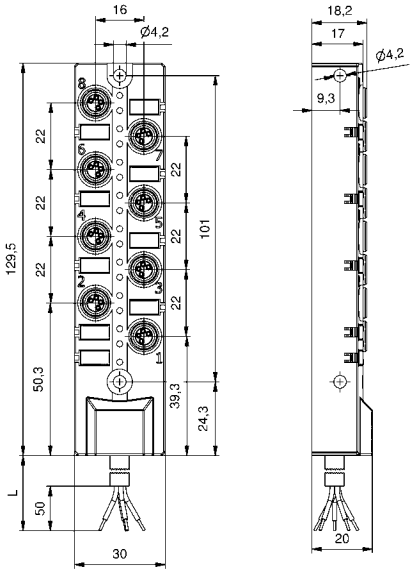

ORDER DATA

Cable	Length/L	Description	4-pos Part-no.
TPU, halogenfree black, Li9YH11YH 2x0,75/16x0,34mm²	5m	SAL-8-8FK4-17L-5/K3	42-05002
	10m	SAL-8-8FK4-17L-10/K3	42-05003

SENSOR - ACTUATOR - JUNCTION BOX

4-fold Junction box, with M12x1- connector, I/O-ports 3-pos

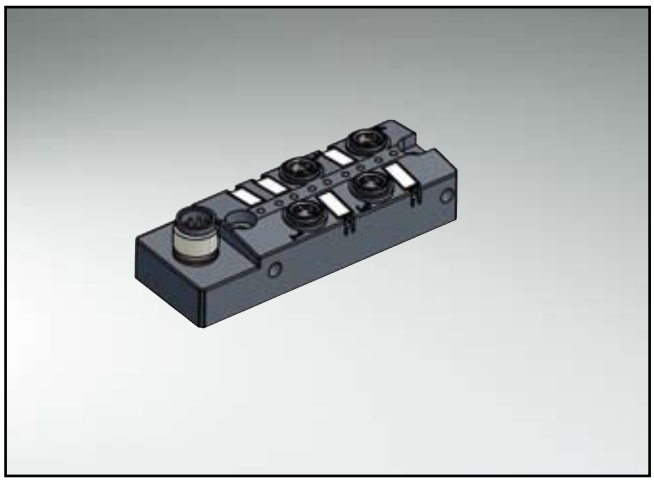

TECHNICAL DATA

Rated voltage	max. 30 V
Current rating	2A per signal contact Total ampacity max. 3A
Pollution degree	3/2
Insulation resistance	=$10^9\Omega$
Degree of protection	IP67 in mated condition
Temperature range	-5°C to +60°C
Mating cycles	<=100

Directive 2002 95 EC
„RoHS"
Compliant

PIN CONFIGURATION M12

CONTACT ASSIGNMENT 3-POS

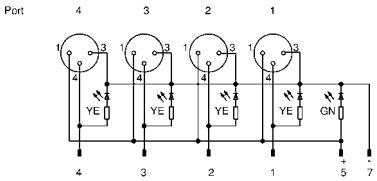

DIMENSION DRAWING

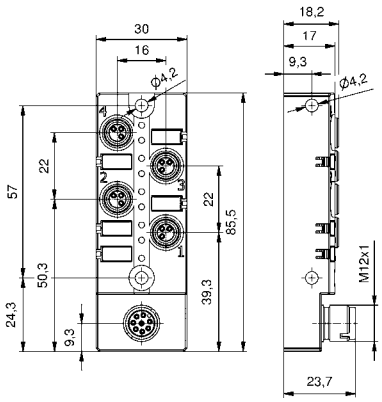

ORDER DATA

Description	3-pos Part-no.
SAL-8-4FK3-5L	42-05010

SENSOR - ACTUATOR - JUNCTION BOX

8-fold Junction box, with M16x0,75-connector, I/O-ports 3-pos

TECHNICAL DATA

Rated voltage	max. 30 V
Current rating	2A per signal contact Total ampacity max. 6A
Pollution degree	3/2
Insulation resistance	$=10^9\Omega$
Degree of protection	IP67 in mated condition
Temperature range	-5°C to +60°C
Mating cycles	<=100

Directive 2002 95 EC
„RoHS"
Compliant

PIN CONFIGURATION M16

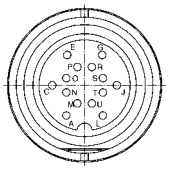

CONTACT ASSIGNMENT 3-POS

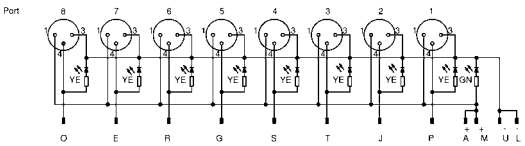

DIMENSION DRAWING

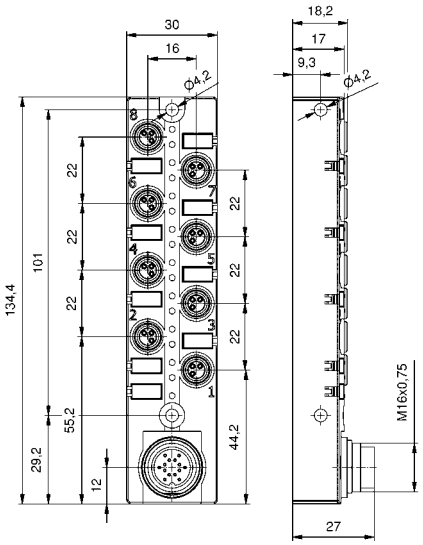

ORDER DATA

Description	3-pos Part-no.
SAL-8-8FK3-9L	42-05011

Section 5
Speciale Applications M12x1

The demands for higher and higher degrees of temperature resistance certainly don't stop for industrial automation.

For these kinds of applications, CONEC now offers the high temperature family, which can withstand 8000 hours at a constant temperature of +125°C – it can also withstand temporary peak values of up to 150°C over 2000 hours.

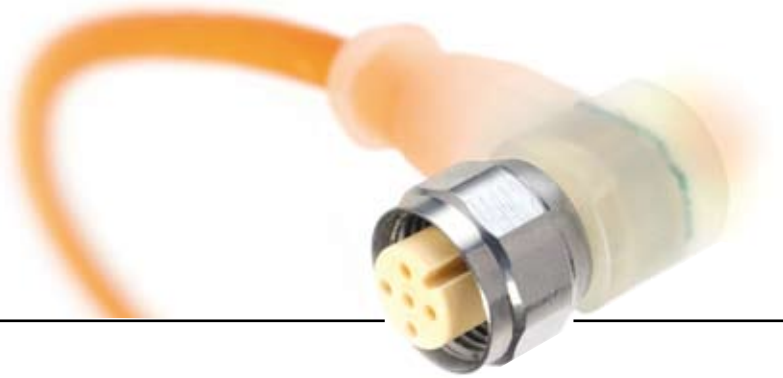

The Food & Beverage industry has very special requirements regarding chemical and temperature resistance – also for the circular connector.

The procurement of standard components is often not up to this task. Materials have been selected for the CONEC circular connectors of the FOOD&BEVERAGE family which meet high hygienic requirements and which are resistance to common, harsh cleaning agents used in high pressure cleaning processes.

FOOD&BEVERAGE circular connectors from CONEC meet protection class IP69K.

SAL M12x1 Connectors overermoulded High temperature / Food & Beverage

Nomenclature

S A L - H T - 1 2 _ - R K W 4 - 2 L - 3 / P 1

SAL
Sensor Actor Line

Building
HT = Higher temperature resistance
FB = Food & Beverage

Installation size
12 = M12x1

Coding
= A-coding

Building
R = Circular connector

Configuration
K = Female connector
S = Male connector

Building
= Axial
W = Angled

Number of poles
4 = 4-pos
5 = 5-pos

LED-display
2L = 2 LED-display
3L = 3 LED-display

Cable length
XX = Length [m]

Cable quality
P1 = PP, orange
S1 = TPE, black

SAL M12x1 Connectors overermoulded High temperature / Food & Beverage

Technical Data

Basic material	
Contact	**HT**: CuZn, CuBe / **FB**: CuZn
Contact plating	Nickel-plated, gold-plated
Contact carrier	**HT**: PBT GF, UL 94 | **FB**: PP GF, UL 94
Moulding body	Thermoplastic elastomere
Sealing	FPM
Coupling nut/-screw	**HT**: CuZn, nickel-plated | **FB**: 1.4404 stainless steel

Information on the following pages are basing on below mentioned IEC-standards.

Rated voltage	IEC 61076-2-101
Current rating	IEC 61076-2-101
Insulation resistance	IEC 60512-2
Pollution degree	IEC 60664-1
Degree of protection	IEC 60529
Temperature range	IEC 60664-1
Mating cycles	IEC 61076-2--101

Technical subject to change without notice.

SAL M12x1 Sockets High temperature / Food & Beverage

Nomenclature

S A L - H T - 1 2 - F K P 4 - 0,5 - 9

SAL
Sensor Actor Line

Building
HT = Higher temperature resistance
FB = Food & Beverage

Installation size
12 = M12x1

Coding
= A-coding

Building
F = Socket

Configuration
K = Female connector
S = Male connector

Assembly
= Frontmounting
P = Positioning possible, Frontmounting
H = Backmounting

Number of poles
4 = 4-pos
5 = 5-pos

Type of Connection
XX = Lenght of wire [m]

Screw connection
= M16x1,5
9 = PG9

SAL M12x1 Sockets High temperature / Food & Beverage

Technical Data

Basic material	
Contact	CuZn
Contact plating	Nickel-plated, gold-plated
Contact carrier	**HT**: PBT GF, UL 94 | **FB**: PP GF, UL 94
Sealing	FPM
Counter nut	**HT**: CuZn, nickel-plated | **FB**: 1.4404 stainless steel
Socket housing	**HT**: CuZn, nickel-plated | **FB**: 1.4404 stainless steel
Grouting	Polyurethane-resin, UL 94

Information on the following pages are basing on below mentioned IEC-standards.

Rated voltage	IEC 61076-2-101
Current rating	IEC 61076-2-101
Insulation resistance	IEC 60512-2
Pollution degree	IEC 60664-1
Degree of protection	IEC 60529
Temperature range	IEC 60664-1
Mating cycles	IEC 61076-2-101

Technical subject to change without notice.

SAL M12x1 Sensor-/Actuatorbox Food & Beverage

Nomenclature

S A L - F B - 1 2 - 8 F K 5 - L - 5 / A 2

SAL
Sensor Actor Line

Building
FB = Food & Beverage

Installation size
12 = M12x1

Coding
= A-coding

Quantity I/O-ports
4 = 4-fold Junction box
8 = 8-fold Junction box

Building
F = Socket

Configuration
K = Female connector

Number of poles
5 = I/O-port 4-pos + Ground

LED-display
1L = 1 LED-display

Cable length
5 = 5m
10 = 10m

Cable quality/Connection
= M23x1-connector
A2 = PVC, black

SAL M12x1 Sensor-/Actuatorbox Food & Beverage

Technical Data

Basic material	
Contact	CuZn
Contact plating	Nickel-plated, gold-plated
Contact carrier	PBT GF, UL 94
Sealing	FPM
Housing	1.4404 stainless steel
Grouting	Polyurethane-resin, UL 94

Information on the following pages are basing on below mentioned IEC-standards.

Rated voltage	IEC 61076-2-101
Current rating	IEC 61076-2-101
Insulation resistance	IEC 60512-2
Pollution degree	IEC 60664-1
Degree of protection	IEC 60529
Temperature range	IEC 60664-1
Mating cycles	IEC 61076-2-101

Technical subject to change without notice.

SAL M12x1 Connectors - HT Temperature resistant 125°C

Female connector, axial

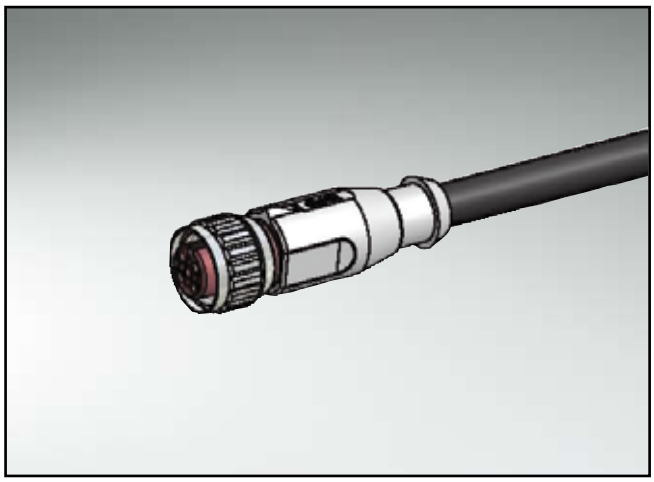

Technical Data

Rated voltage	4-pos	5-pos
	250V	60V
Current rating	4A at +40°C	
Pollution degree	3/2	
Insulation resistance	=$10^9\Omega$	
Degree of protection	IP65 in mated condition	
Temperature range	+100°C to 30.000h +125°C to 8.000h +150°C to 2.000h	
Mating cycles	<=100	

Directive 2002 95 EC „RoHS" Compliant

Pin configuration

4-pos

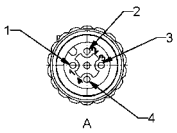

5-pos

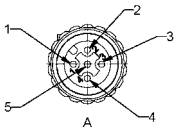

Contact assignment 4 - 5-pos

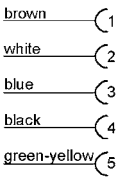

Dimension drawing

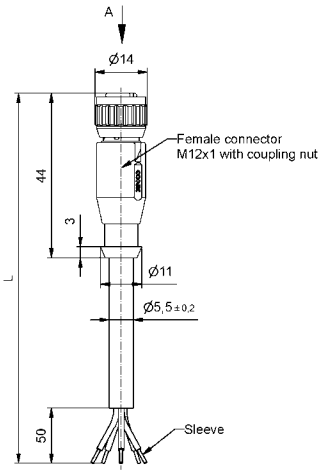

Order data

Cable	Length/L	Description	4-pos Part-no.	Description	5-pos Part-no.
TPE, black 0,34mm²	2m	SAL-HT-12-RK4-2/S1	43-10480	SAL-HT-12-RK5-2/S1	43-10484
	3m	SAL-HT-12-RK4-3/S1	43-10481	SAL-HT-12-RK5-3/S1	43-10485
	5m	SAL-HT-12-RK4-5/S1	43-10482	SAL-HT-12-RK5-5/S1	43-10486
	10m	SAL-HT-12-RK4-10/S1	43-10483	SAL-HT-12-RK5-10/S1	43-10487

For custom length or quality levels contact factory.

SAL M12x1 Connectors - HT Temperature resistant 125°C

Male connector, axial

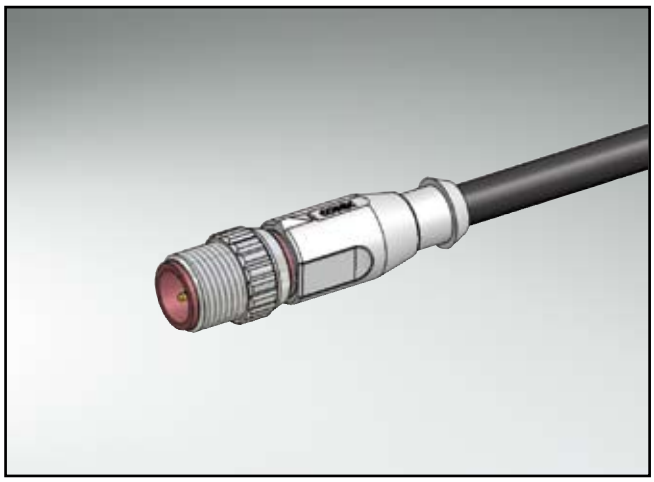

Technical Data

	4-pos	5-pos
Rated voltage	250V	60V
Current rating	4A at +40°C	
Pollution degree	3/2	
Insulation resistance	=$10^9\Omega$	
Degree of protection	IP65 in mated condition	
Temperature range	+100°C to 30.000h +125°C to 8.000h +150°C to 2.000h	
Mating cycles	<=100	

Directive 2002 95 EC „RoHS" Compliant

Pin configuration

4-pos

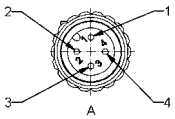

5-pos

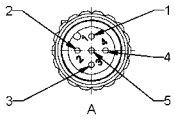

Contact assignment 4 - 5-pos

brown	1
white	2
blue	3
black	4
green-yellow	5

Dimension drawing

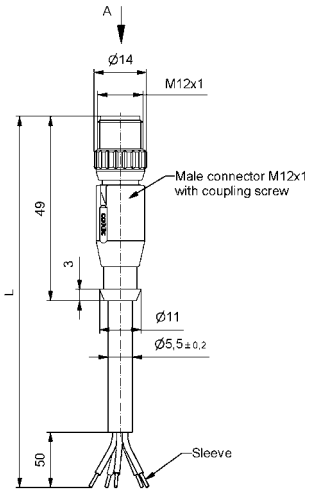

Order data

Cable	Length/L	Description	4-pos Part-no.	Description	5-pos Part-no.
TPE, black 0,34mm²	2m	SAL-HT-12-RS4-2/S1	43-10488	SAL-HT-12-RS5-2/S1	43-10492
	3m	SAL-HT-12-RS4-3/S1	43-10489	SAL-HT-12-RS5-3/S1	43-10493
	5m	SAL-HT-12-RS4-5/S1	43-10490	SAL-HT-12-RS5-5/S1	43-10494
	10m	SAL-HT-12-RS4-10/S1	43-10491	SAL-HT-12-RS5-10/S1	43-10495

For custom length or quality levels contact factory.

SAL M12x1 Connectors - HT Temperature resistant 125°C

Female connector, angled

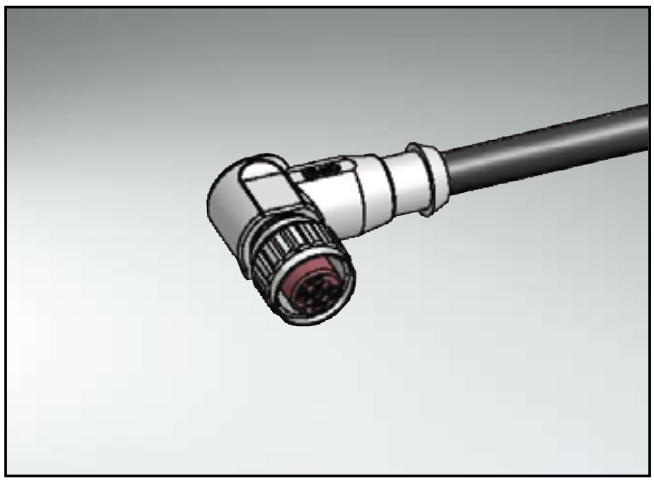

Technical Data

	4-pos	5-pos
Rated voltage	250V	60V
Current rating	4A at +40°C	
Pollution degree	3/2	
Insulation resistance	=$10^9\Omega$	
Degree of protection	IP65 in mated condition	
Temperature range	+100°C to 30.000h +125°C to 8.000h +150°C to 2.000h	
Mating cycles	<=100	

Directive 2002 95 EC „RoHS" Compliant

Pin configuration

4-pos

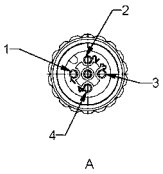

5-pos

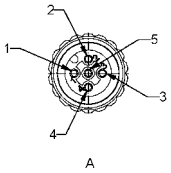

Contact assignment 4 - 5-pos

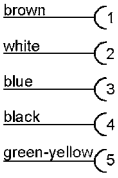

Dimension drawing

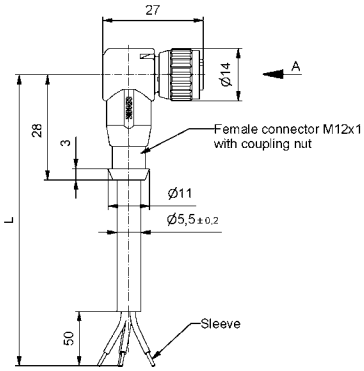

Order data

Cable	Length/L	Description	4-pos Part-no.	Description	5-pos Part-no.
TPE, black 0,34mm²	2m	SAL-HT-12-RKW4-2/S1	43-10496	SAL-HT-12-RKW5-2/S1	43-10500
	3m	SAL-HT-12-RKW4-3/S1	43-10497	SAL-HT-12-RKW5-3/S1	43-10501
	5m	SAL-HT-12-RKW4-5/S1	43-10498	SAL-HT-12-RKW5-5/S1	43-10502
	10m	SAL-HT-12-RKW4-10/S1	43-10499	SAL-HT-12-RKW5-10/S1	43-10503

For custom length or quality levels contact factory.

SAL M12X1 CONNECTORS - HT TEMPERATURE RESISTANT 125°C

Male connector, angled

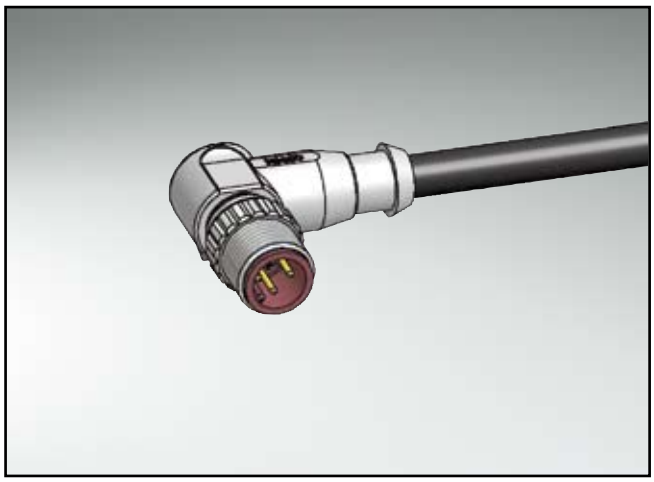

TECHNICAL DATA

Rated voltage	4-pos	5-pos
	250V	60V
Current rating	4A at +40°C	
Pollution degree	3/2	
Insulation resistance	=$10^9\Omega$	
Degree of protection	IP65 in mated condition	
Temperature range	+100°C to 30.000h +125°C to 8.000h +150°C to 2.000h	
Mating cycles	<=100	

Directive 2002 95 EC „RoHS" Compliant

PIN CONFIGURATION

4-pos

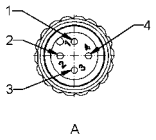

5-pos

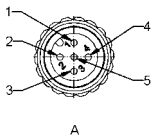

CONTACT ASSIGNMENT 4 - 5-POS

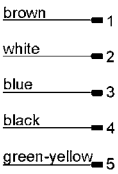

DIMENSION DRAWING

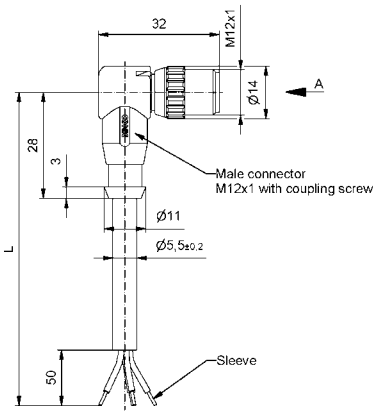

ORDER DATA

Cable	Length/L	Description	4-pos Part-no.	Description	5-pos Part-no.
TPE, black 0,34mm²	2m	SAL-HT-12-RSW4-2/S1	43-10504	SAL-HT-12-RSW5-2/S1	43-10508
	3m	SAL-HT-12-RSW4-3/S1	43-10505	SAL-HT-12-RSW5-3/S1	43-10509
	5m	SAL-HT-12-RSW4-5/S1	43-10506	SAL-HT-12-RSW5-5/S1	43-10510
	10m	SAL-HT-12-RSW4-10/S1	43-10507	SAL-HT-12-RSW5-10/S1	43-10511

For custom length or quality levels contact factory.

SAL M12x1 Connectors - HT Temperature resistant 125°C

Connecting cable Female connector, axial – Male connector, axial

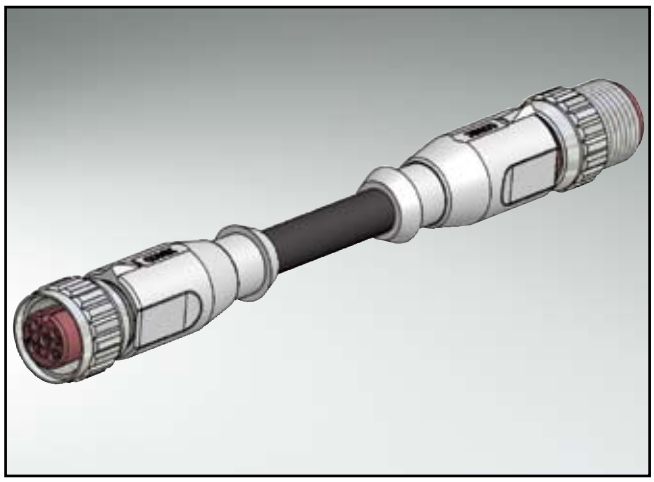

Technical Data

Rated voltage	4-pos	5-pos
	250V	60V
Current rating	4A at +40°C	
Pollution degree	3/2	
Insulation resistance	=$10^9\Omega$	
Degree of protection	IP65 in mated condition	
Temperature range	+100°C to 30.000h +125°C to 8.000h +150°C to 2.000h	
Mating cycles	<=100	

Directive 2002 95 EC „RoHS" Compliant

Pin configuration

4-pos female

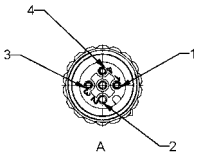

5-pos female

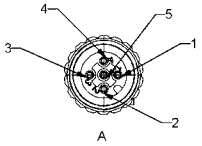

4-pos male

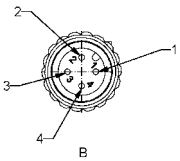

5-pos male

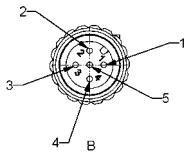

Contact assignment 4 - 5-pos

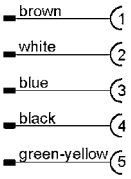

Dimension drawing

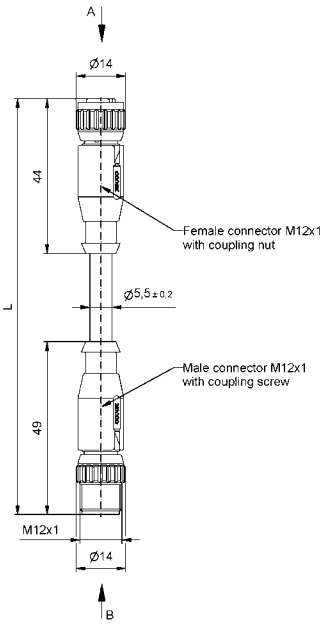

Order data

Cable	Length/L	Description	4-pos Part-no.	Description	5-pos Part-no.
TPE, black 0,34mm²	0,3m	SAL-HT-12-RK4-RS4-0,3/S1	43-10900	SAL-HT-12-RK5-RS5-0,3/S1	43-10904
	0,6m	SAL-HT-12-RK4-RS4-0,6/S1	43-10901	SAL-HT-12-RK5-RS5-0,6/S1	43-10905
	1,5m	SAL-HT-12-RK4-RS4-1,5/S1	43-10902	SAL-HT-12-RK5-RS5-1,5/S1	43-10906
	3,0m	SAL-HT-12-RK4-RS4-3/S1	43-10903	SAL-HT-12-RK5-RS5-3/S1	43-10907

For custom length or quality levels contact factory.

SAL M12x1 Connectors - HT Temperature resistant 125°C

Connecting cable Female connector, angled – Male connector, axial

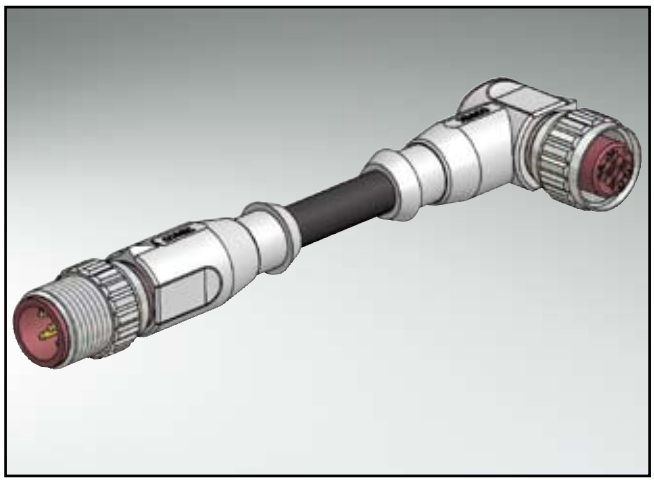

Technical Data

	4-pos	5-pos
Rated voltage	250V	60V
Current rating	4A at +40°C	
Pollution degree	3/2	
Insulation resistance	=$10^9\Omega$	
Degree of protection	IP65 in mated condition	
Temperature range	+100°C to 30.000h +125°C to 8.000h +150°C to 2.000h	
Mating cycles	<=100	

Directive 2002 95 EC „RoHS" Compliant

Pin configuration

4-pos female

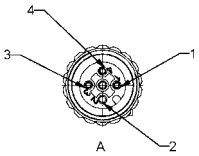

5-pos female

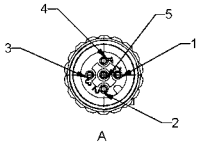

4-pos male

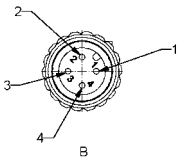

5-pos male

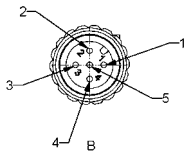

Contact assignment 4 - 5-pos

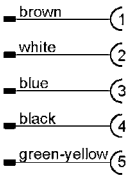

Dimension drawing

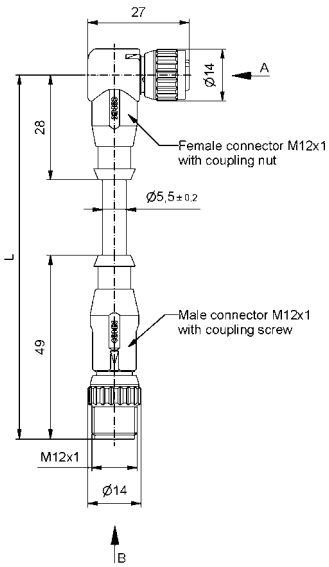

Order data

Cable	Length/L	Description	4-pos Part-no.	Description	5-pos Part-no.
TPE, black 0,34mm²	0,3m	SAL-HT-12-RKW4-RS4-0,3/S1	43-10908	SAL-HT-12-RKW5-RS5-0,3/S1	43-10912
	0,6m	SAL-HT-12-RKW4-RS4-0,6/S1	43-10909	SAL-HT-12-RKW5-RS5-0,6/S1	43-10913
	1,5m	SAL-HT-12-RKW4-RS4-1,5/S1	43-10910	SAL-HT-12-RKW5-RS5-1,5/S1	43-10914
	3,0m	SAL-HT-12-RKW4-RS4-3/S1	43-10911	SAL-HT-12-RKW5-RS5-3/S1	43-10915

For custom length or quality levels contact factory.

SAL M12x1 Connectors - HT Temperature resistant 125°C

Female socket with wire, frontmounting, M16x1,5-thread

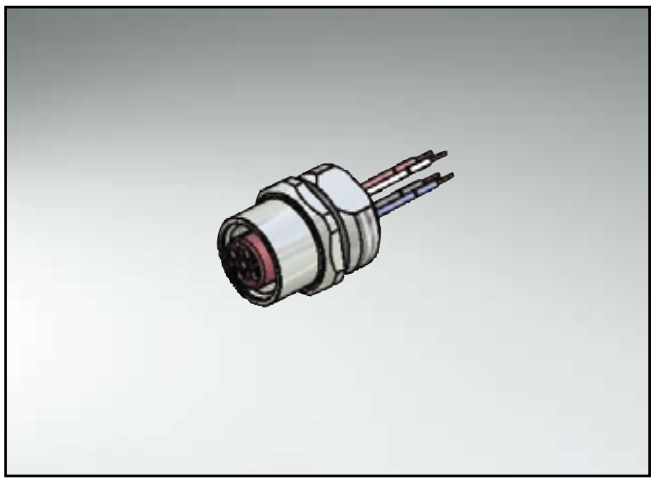

Technical Data

Rated voltage	4-pos	5-pos
	250V	60V
Current rating	4A at +40°C	
Pollution degree	3/2	
Insulation resistance	=$10^9\Omega$	
Degree of protection	IP67 in mated condition	
Temperature range	+100°C to 30.000h +125°C to 8.000h +150°C to 2.000h	
Mating cycles	<=100	

Directive 2002 95 EC „RoHS" Compliant

Pin configuration

4 - 5-pos

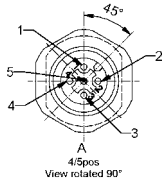

Contact assignment 4 - 5-pos

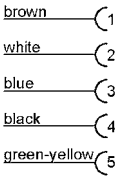

Dimension drawing

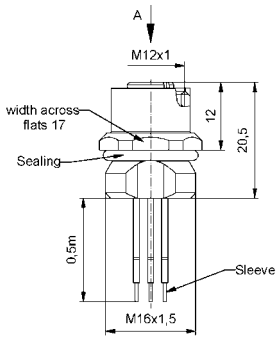

Contact assignment 5.1-pos

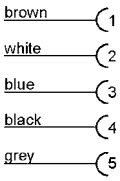

Cut-out front panel

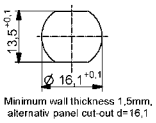

Order data

Wire	Length/L	Description	4-pos Part-no.	Description	5-pos Part-no.
TPE, AWG 24	0,5m	SAL-HT-12-FK4-0,5	43-01022	SAL-HT-12-FK5-0,5	43-01023
	0,5m			SAL-HT-12-FK5.1-0,5	43-01046
Accessories Please order separately		Counter nut	43-01155		

SAL M12x1 Connectors - HT Temperature resistant 125°C

Female socket with wire, frontmounting, PG9-thread

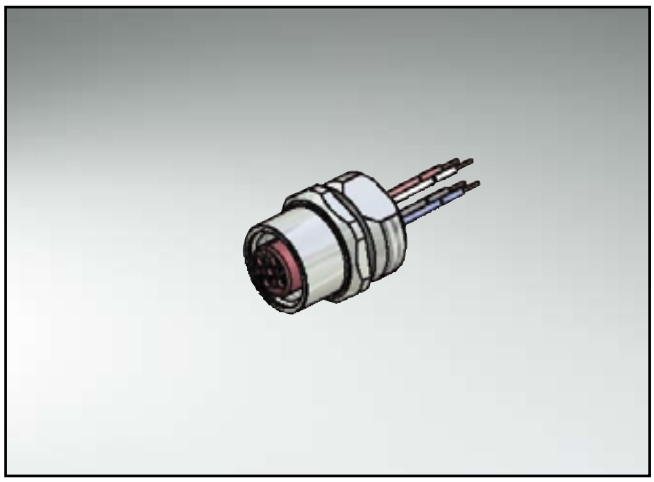

Technical Data

Rated voltage	4-pos	5-pos
	250V	60V
Current rating	4A at +40°C	
Pollution degree	3/2	
Insulation resistance	$=10^9\Omega$	
Degree of protection	IP67 in mated condition	
Temperature range	+100°C to 30.000h +125°C to 8.000h +150°C to 2.000h	
Mating cycles	<=100	

Directive 2002 95 EC „RoHS" Compliant

Pin configuration

4 - 5-pos

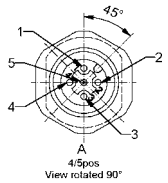

Contact assignment 4 - 5-pos

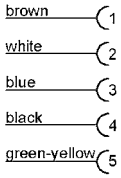

Dimension drawing

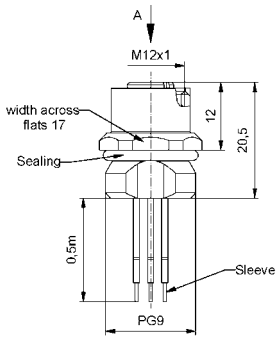

Contact assignment 5.1-pos

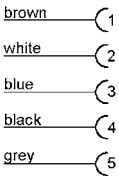

Cut-out front panel

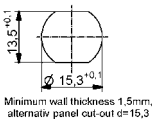

Order data

Wire	Length/L	Description	4-pos Part-no.	Description	5-pos Part-no.
TPE AWG 24	0,5m	SAL-HT-12-FK4-0,5-9	43-01076	SAL-HT-12-FK5-0,5-9	43-01078
	0,5m			SAL-HT-12-FK5.1-0,5-9	43-01077
Accessories Please order separately		Counter nut	43-01156		

SAL M12x1 Connectors - HT Temperature resistant 125°C

Male socket with wire, frontmounting, M16x1,5-thread

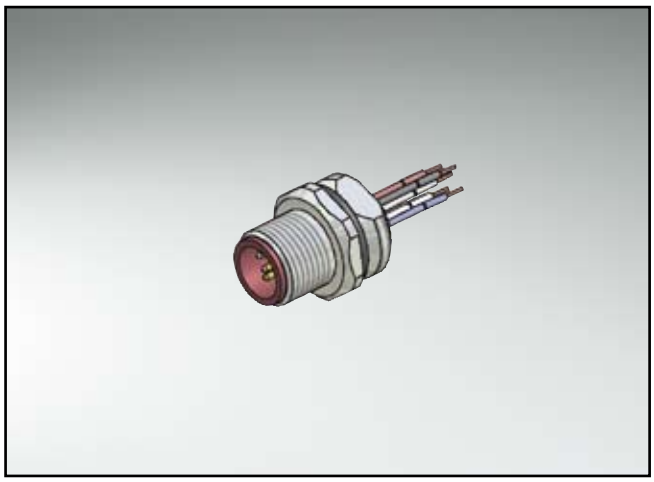

Technical Data

	4-pos	5-pos
Rated voltage	250V	60V
Current rating	4A at +40°C	
Pollution degree	3/2	
Insulation resistance	=10⁹Ω	
Degree of protection	IP67 in mated condition	
Temperature range	+100°C to 30.000h +125°C to 8.000h +150°C to 2.000h	
Mating cycles	<=100	

Directive 2002 95 EC „RoHS" Compliant

Pin configuration

4 - 5-pos

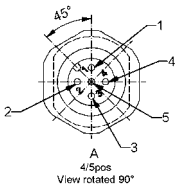

Contact assignment 4 - 5-pos

Dimension drawing

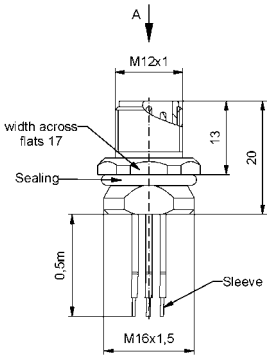

Contact assignment 5.1-pos

Cut-out front panel

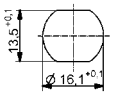

Minimum wall thickness 1,5mm, alternativ panel cut-out d=16,1

Order data

Wire	Length/L	Description	4-pos Part-no.	Description	5-pos Part-no.
TPE AWG 24	0,5m	SAL-HT-12-FS4-0,5	43-01024	SAL-HT-12-FS5-0,5	43-01025
	0,5m			SAL-HT-12-FS5.1-0,5	43-01050
Accessories Please order separately		Counter nut	43-01155		

SAL M12x1 Connectors - HT Temperature resistant 125°C

Male socket with wire, frontmounting, PG9-thread

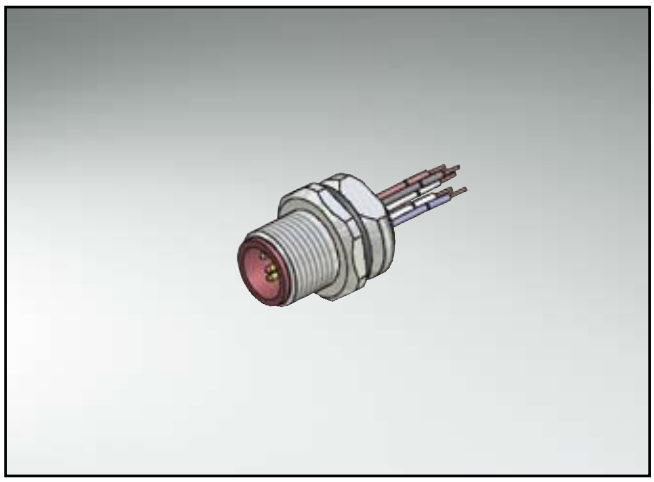

Technical Data

	4-pos	5-pos
Rated voltage	250V	60V
Current rating	4A at +40°C	
Pollution degree	3/2	
Insulation resistance	=$10^9\Omega$	
Degree of protection	IP67 in mated condition	
Temperature range	+100°C to 30.000h +125°C to 8.000h +150°C to 2.000h	
Mating cycles	<=100	

Directive 2002 95 EC „RoHS" Compliant

Pin configuration

4 - 5-pos

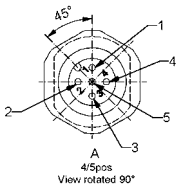

Contact assignment 4 - 5-pos

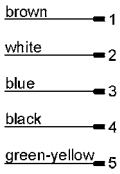

Dimension drawing

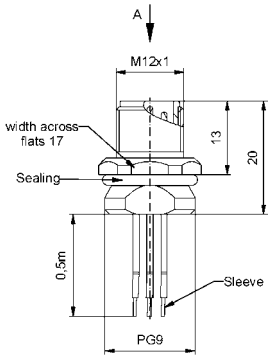

Contact assignment 5.1-pos

Cut-out front panel

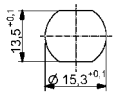

Minimum wall thickness 1,5mm, alternativ panel cut-out d=15,3

Order data

Wire	Length/L	Description	4-pos Part-no.	Description	5-pos Part-no.
TPE AWG 24	0,5m	SAL-HT-12-FS4-0,5-9	43-01085	SAL-HT-12-FS5-0,5-9	43-01087
	0,5m			SAL-HT-12-FS5.1-0,5-9	43-01086
Accessories Please order separately		Counter nut	43-01156		

SAL M12x1 Connectors - HT Temperature resistant 125°C

Female socket with wire, positioning possible, frontmounting, M16x1,5-thread

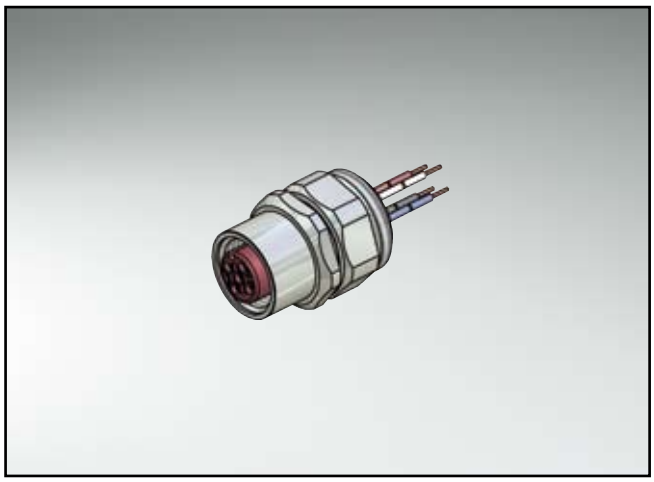

Technical Data

	4-pos	5-pos
Rated voltage	250V	60V
Current rating	4A at +40°C	
Pollution degree	3/2	
Insulation resistance	=$10^9\Omega$	
Degree of protection	IP67 in mated condition	
Temperature range	+100°C to 30.000h +125°C to 8.000h +150°C to 2.000h	
Mating cycles	<=100	

Directive 2002 95 EC „RoHS" Compliant

Pin configuration

4 - 5-pos

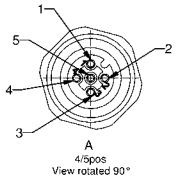

Contact assignment 4 - 5-pos

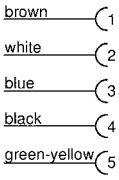

Contact assignment 5.1-pos

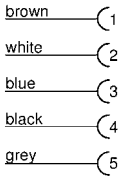

Dimension drawing

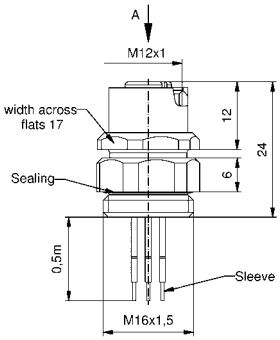

Order data

Wire	Length/L	Description	4-pos Part-no.	Description	5-pos Part-no.
TPE AWG 24	0,5m	SAL-HT-12-FKP4-0,5	43-01038	SAL-HT-12-FKP5-0,5	43-01039
	0,5m			SAL-HT-12-FKP5.1-0,5	43-01127
Accessories Please order separately		Counter nut	43-01155		

SAL M12x1 Connectors - HT Temperature resistant 125°C

Female socket with wire, positioning possible, frontmounting, PG9-thread

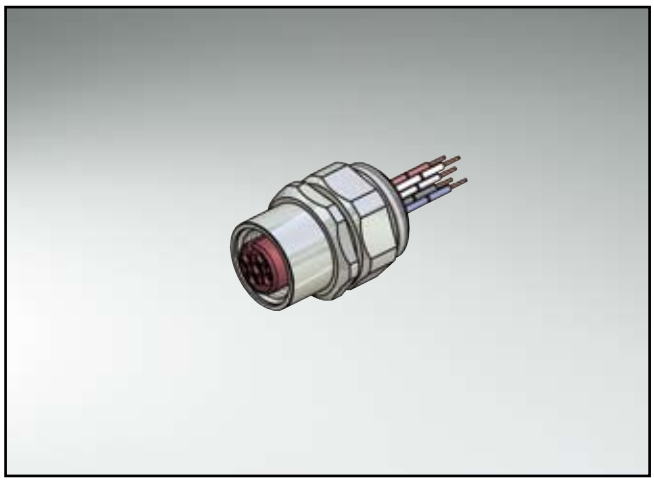

Technical Data

Rated voltage	4-pos	5-pos
	250V	60V
Current rating	4A at +40°C	
Pollution degree	3/2	
Insulation resistance	=$10^9\Omega$	
Degree of protection	IP67 in mated condition	
Temperature range	+100°C to 30.000h +125°C to 8.000h +150°C to 2.000h	
Mating cycles	<=100	

Directive 2002 95 EC „RoHS" Compliant

Pin configuration

4 - 5-pos

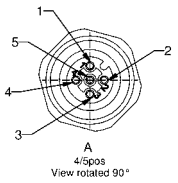

Contact assignment 4 - 5-pos

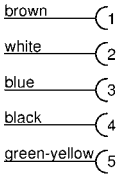

Dimension drawing

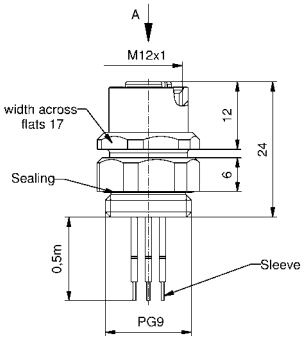

Contact assignment 5.1-pos

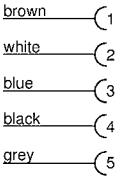

Order data

Wire	Length/L	Description	4-pos Part-no.	Description	5-pos Part-no.
TPE AWG 24	0,5m	SAL-HT-12-FKP4-0,5-9	43-01112	SAL-HT-12-FKP5-0,5-9	43-01113
	0,5m			SAL-HT-12-FKP5.1-0,5-9	43-01135
Accessories Please order separately		Counter nut	43-01156		

SAL M12x1 Connectors - HT Temperature resistant 125°C

Male socket with wire, positioning possible, frontmounting, M16x1,5-thread

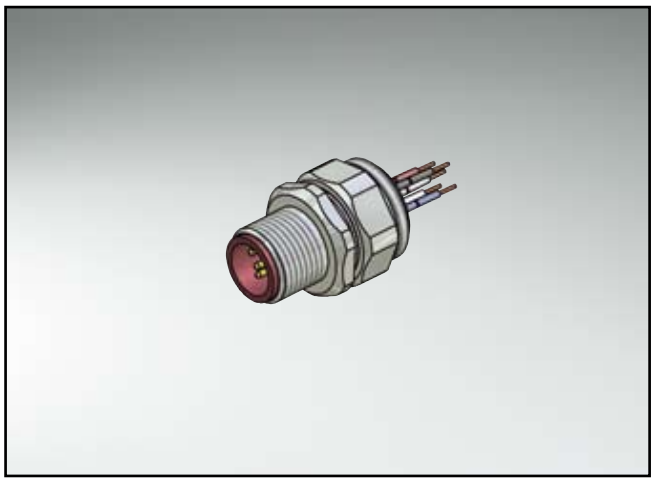

Technical Data

Rated voltage	4-pos	5-pos
	250V	60V
Current rating	4A at +40°C	
Pollution degree	3/2	
Insulation resistance	=$10^9\Omega$	
Degree of protection	IP67 in mated condition	
Temperature range	+100°C to 30.000h +125°C to 8.000h +150°C to 2.000h	
Mating cycles	<=100	

Directive 2002 95 EC „RoHS" Compliant

Pin configuration

4 - 5-pos

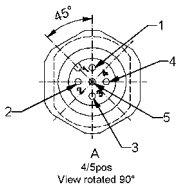

Contact assignment 4 - 5-pos

Contact assignment 5.1-pos

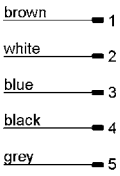

Dimension drawing

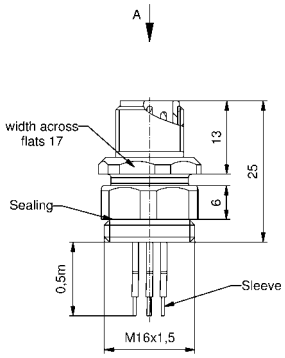

Order data

Wire	Length/L	Description	4-pos Part-no.	Description	5-pos Part-no.
TPE AWG 24	0,5m	SAL-HT-12-FSP4-0,5	43-01040	SAL-HT-12-FSP5-0,5	43-01041
	0,5m			SAL-HT-12-FSP5.1-0,5	43-01128
Accessories Please order separately		Counter nut	43-01155		

SAL M12x1 Connectors - HT Temperature resistant 125°C

Male socket with wire, positioning possible, frontmounting, PG9-thread

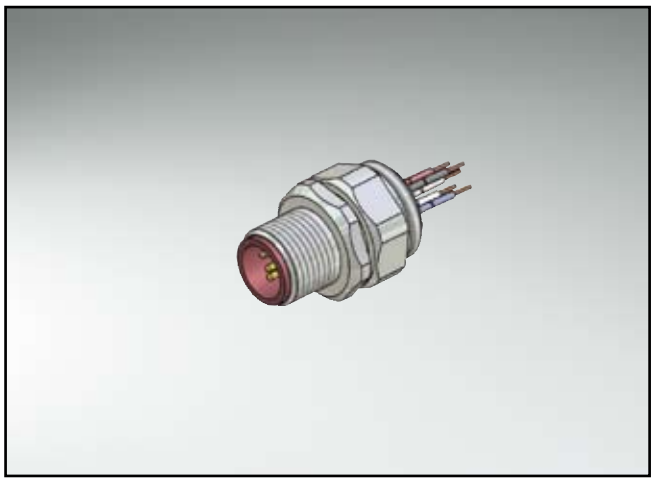

Technical Data

Rated voltage	4-pos	5-pos
	250V	60V
Current rating	4A at +40°C	
Pollution degree	3/2	
Insulation resistance	=$10^9\Omega$	
Degree of protection	IP67 in mated condition	
Temperature range	+100°C to 30.000h +125°C to 8.000h +150°C to 2.000h	
Mating cycles	<=100	

Directive 2002 95 EC „RoHS" Compliant

Pin configuration

4 - 5-pos

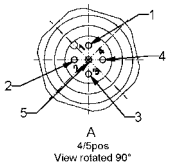

Contact assignment 4 - 5-pos

Dimension drawing

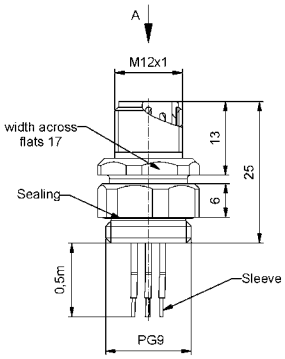

Contact assignment 5.1-pos

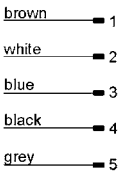

Order data

Wire	Length/L	Description	4-pos Part-no.	Description	5-pos Part-no.
TPE AWG 24	0,5m	SAL-HT-12-FSP4-0,5-9	43-01114	SAL-HT-12-FSP5-0,5-9	43-01115
	0,5m			SAL-HT-12-FSP5.1-0,5-9	43-01136
Accessories Please order separately		Counter nut	43-01156		

SAL M12x1 Connectors - FB for Food & Beverage Industry

Female connector, axial

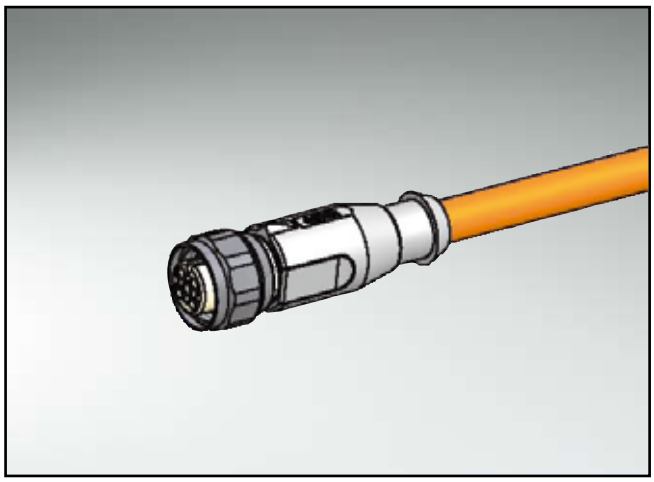

Technical Data

	4-pos	5-pos
Rated voltage	250V	60V
Current rating	4A at +40°C	
Pollution degree	3/2	
Insulation resistance	=$10^9\Omega$	
Degree of protection	IP69K in mated condition	
Temperature range	-30°C to +105°C	
Mating cycles	<=100	

Directive 2002 95 EC „RoHS" Compliant

Pin configuration

4-pos

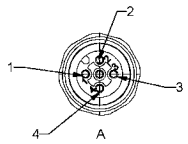

5-pos

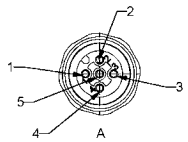

Contact assignment 4 - 5-pos

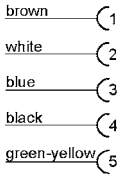

Dimension drawing

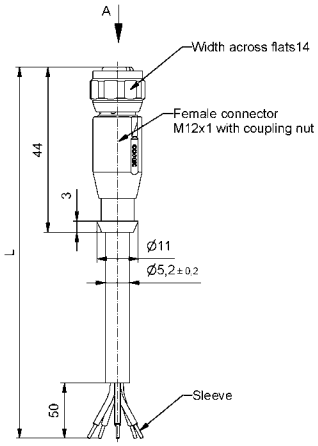

Order data

Cable	Length/L	Description	4-pos Part-no.	Description	5-pos Part-no.
PP, orange 0,34mm²	2m	SAL-FB-12-RK4-2/P1	43-10512	SAL-FB-12-RK5-2/P1	43-10516
	3m	SAL-FB-12-RK4-3/P1	43-10513	SAL-FB-12-RK5-3/P1	43-10517
	5m	SAL-FB-12-RK4-5/P1	43-10514	SAL-FB-12-RK5-5/P1	43-10518
	10m	SAL-FB-12-RK4-10/P1	43-10515	SAL-FB-12-RK5-10/P1	43-10519

For custom length or quality levels contact factory.

SAL M12x1 Connectors - FB for Food & Beverage Industry

Male connector, axial

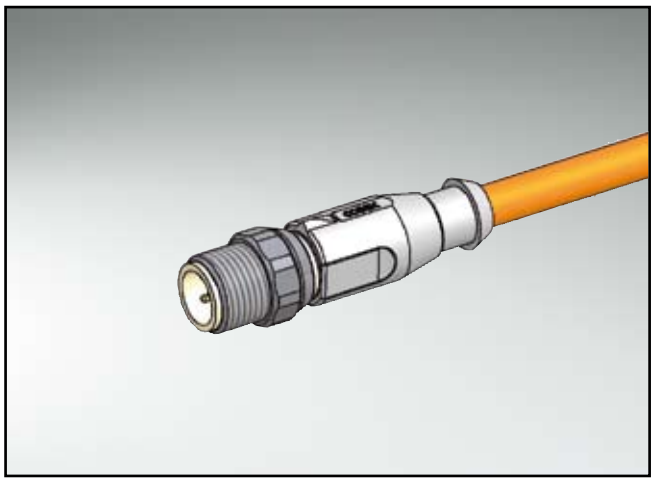

Technical Data

	4-pos	5-pos
Rated voltage	250V	60V
Current rating	4A at +40°C	
Pollution degree	3/2	
Insulation resistance	=$10^9\Omega$	
Degree of protection	IP69K in mated condition	
Temperature range	-30°C to +105°C	
Mating cycles	<=100	

Directive 2002 95 EC „RoHS" Compliant

Pin configuration

4-pos

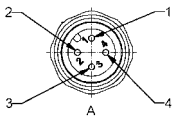

5-pos

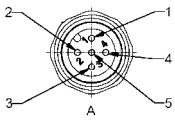

Contact assignment 4 - 5-pos

brown	1
white	2
blue	3
black	4
green-yellow	5

Dimension drawing

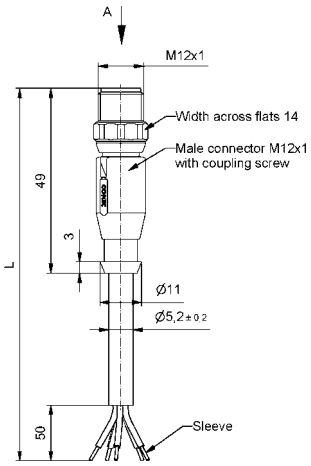

Order data

Cable	Length/L	Description	4-pos Part-no.	Description	5-pos Part-no.
PP, orange 0,34mm²	2m	SAL-FB-12-RS4-2/P1	43-10520	SAL-FB-12-RS5-2/P1	43-10524
	3m	SAL-FB-12-RS4-3/P1	43-10521	SAL-FB-12-RS5-3/P1	43-10525
	5m	SAL-FB-12-RS4-5/P1	43-10522	SAL-FB-12-RS5-5/P1	43-10526
	10m	SAL-FB-12-RS4-10/P1	43-10523	SAL-FB-12-RS5-10/P1	43-10527

For custom length or quality levels contact factory.

SAL M12x1 Connectors - FB for Food & Beverage Industry

Female connector, angled

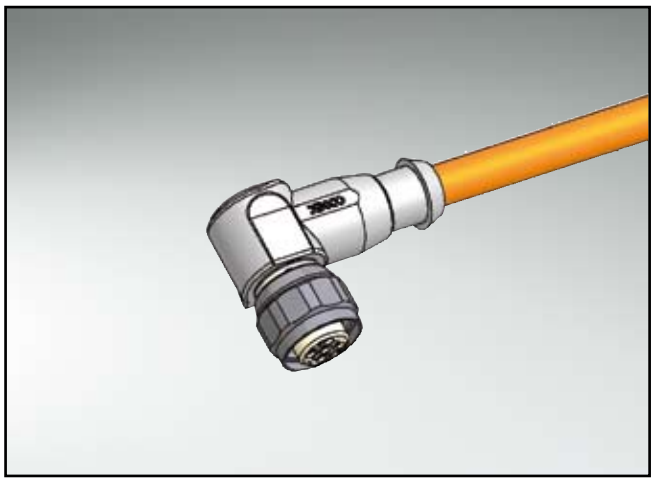

Technical Data

	4-pos	5-pos
Rated voltage	250V	60V
Current rating	4A at +40°C	
Pollution degree	3/2	
Insulation resistance	=$10^9\Omega$	
Degree of protection	IP69K in mated condition	
Temperature range	-30°C to +105°C	
Mating cycles	<=100	

Directive 2002 95 EC „RoHS" Compliant

Pin configuration

4-pos

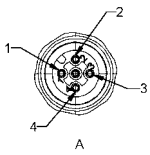

5-pos

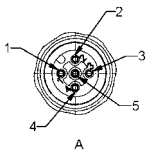

Contact assignment 4 - 5-pos

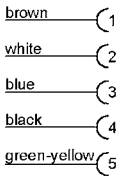

Dimension drawing

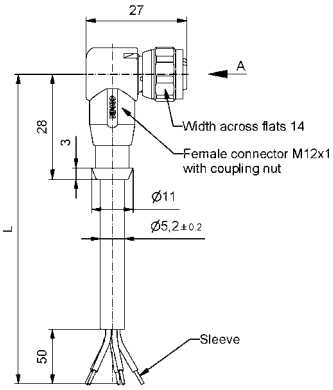

Order data

Cable	Length/L	Description	4-pos Part-no.	Description	5-pos Part-no.
PP, orange 0,34mm²	2m	SAL-FB-12-RKW4-2/P1	43-10528	SAL-FB-12-RKW5-2/P1	43-10532
	3m	SAL-FB-12-RKW4-3/P1	43-10529	SAL-FB-12-RKW5-3/P1	43-10533
	5m	SAL-FB-12-RKW4-5/P1	43-10530	SAL-FB-12-RKW5-5/P1	43-10534
	10m	SAL-FB-12-RKW4-10/P1	43-10531	SAL-FB-12-RKW5-10/P1	43-10535

For custom length or quality levels contact factory.

SAL M12x1 Connectors - FB for Food & Beverage Industry

Male connector, angled

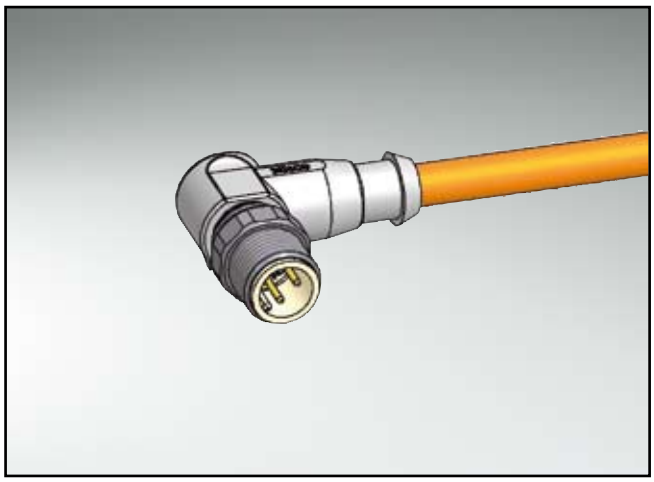

Technical Data

	4-pos	5-pos
Rated voltage	250V	60V
Current rating	4A at +40°C	
Pollution degree	3/2	
Insulation resistance	=$10^9\Omega$	
Degree of protection	IP69K in mated condition	
Temperature range	-30°C to +105°C	
Mating cycles	<=100	

Directive 2002 95 EC „RoHS" Compliant

Pin configuration

4-pos

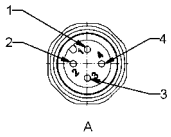

5-pos

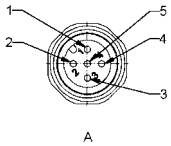

Contact assignment 4 - 5-pos

Dimension drawing

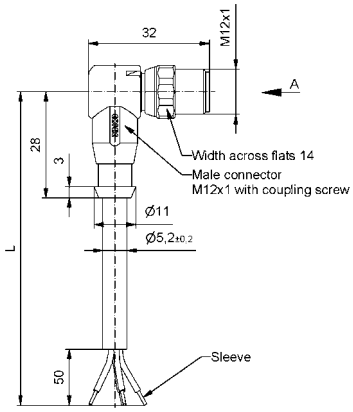

Order data

Cable	Length/L	Description	4-pos Part-no.	Description	5-pos Part-no.
PP, orange 0,34mm²	2m	SAL-FB-12-RSW4-2/P1	43-10536	SAL-FB-12-RSW5-2/P1	43-10540
	3m	SAL-FB-12-RSW4-3/P1	43-10537	SAL-FB-12-RSW5-3/P1	43-10541
	5m	SAL-FB-12-RSW4-5/P1	43-10538	SAL-FB-12-RSW5-5/P1	43-10542
	10m	SAL-FB-12-RSW4-10/P1	43-10539	SAL-FB-12-RSW5-10/P1	43-10543

For custom length or quality levels contact factory.

SAL M12x1 Connectors - FB for Food & Beverage Industry

Female connector, angled, 2-fold LED-display

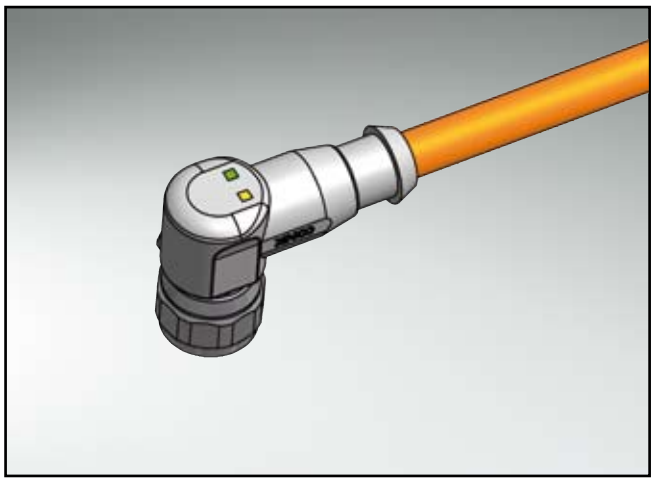

Technical Data

Rated voltage	4-pos 30V
Current rating	4A at +40°C
Pollution degree	3/2
Insulation resistance	=$10^9\Omega$
Degree of protection	IP69K in mated condition
Temperature range	-30°C to +105°C
Mating cycles	<=100

Directive 2002 95 EC „RoHS" Compliant

Pin configuration

4-pos

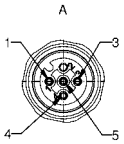

Contact assignment 4-pos

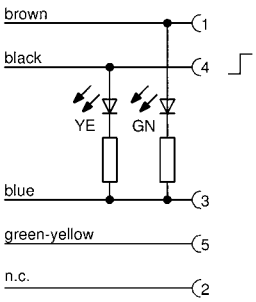

Dimension drawing

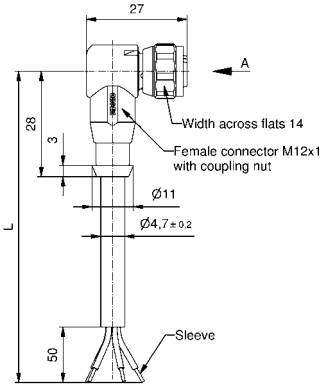

Order data

Cable	Length/L	Description	4-pos Part-no.
PP, orange 0,34mm²	2m	SAL-FB-12-RKW5.2-2L-2/P1	43-11632
	3m	SAL-FB-12-RKW5.2-2L-3/P1	43-11633
	5m	SAL-FB-12-RKW5.2-2L-5/P1	43-11634
	10m	SAL-FB-12-RKW5.2-2L-10/P1	43-11635

For custom length or quality levels contact factory.

SAL M12x1 Connectors - FB for Food & Beverage Industry

Female connector, angled, 3-fold LED-display

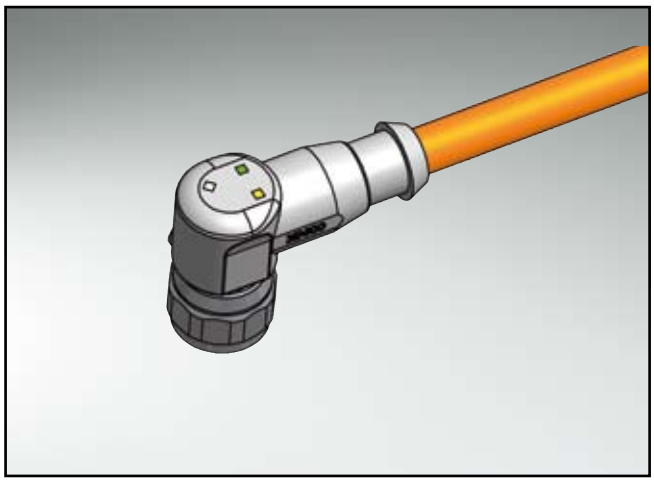

Technical Data

	4-pos	5-pos
Rated voltage	30V	30V
Current rating	4A at +40°C	
Pollution degree	3/2	
Insulation resistance	=$10^9\Omega$	
Degree of protection	IP69K in mated condition	
Temperature range	-30°C to +105°C	
Mating cycles	<=100	

Directive 2002 95 EC „RoHS" Compliant

Pin configuration

4-pos

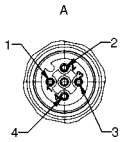

5-pos

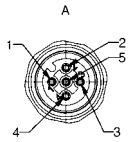

Contact assignment 4-pos

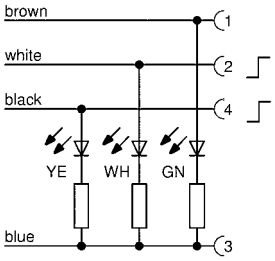

Contact assignment 5-pos

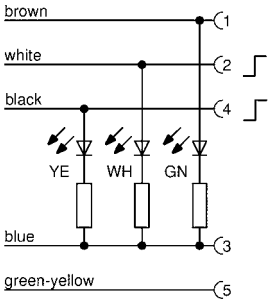

Dimension drawing

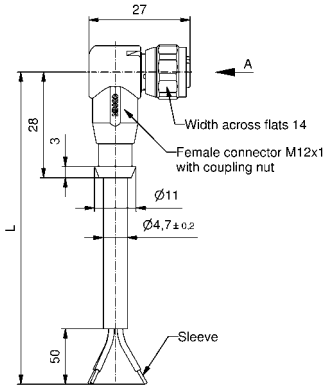

Order data

Cable	Length/L	Description	4-pos Part-no.	Description	5-pos Part-no.
PP, orange 0,34mm²	2m	SAL-FB-12-RKW4-3L-2/P1	43-11636	SAL-FB-12-RKW5-3L-2/P1	43-11640
	3m	SAL-FB-12-RKW4-3L-3/P1	43-11637	SAL-FB-12-RKW5-3L-3/P1	43-11641
	5m	SAL-FB-12-RKW4-3L-5/P1	43-11638	SAL-FB-12-RKW5-3L-5/P1	43-11642
	10m	SAL-FB-12-RKW4-3L-10/P1	43-11639	SAL-FB-12-RKW5-3L-10/P1	43-11643

For custom length or quality levels contact factory.

SAL M12x1 Connectors - FB for Food & Beverage Industry

Connecting cable Female connector, axial – Male connector, axial

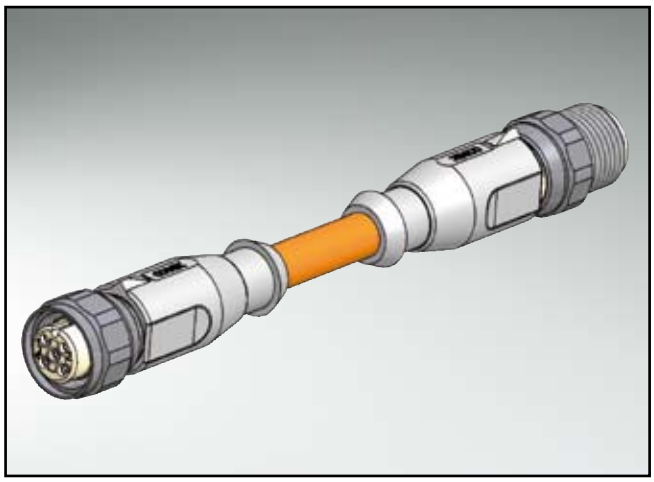

Technical Data

	4-pos	5-pos
Rated voltage	250V	60V
Current rating	4A at +40°C	
Pollution degree	3/2	
Insulation resistance	=$10^9\Omega$	
Degree of protection	IP69K in mated condition	
Temperature range	-30°C to +105°C	
Mating cycles	<=100	

Directive 2002 95 EC „RoHS" Compliant

Pin configuration

4-pos female

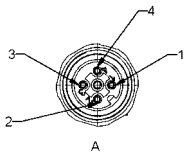

5-pos female

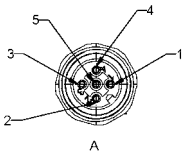

4-pos male

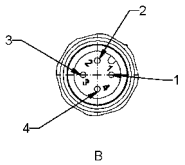

5-pos male

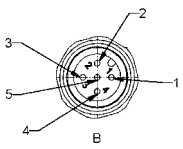

Contact assignment 4 - 5-pos

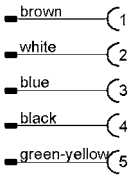

Dimension drawing

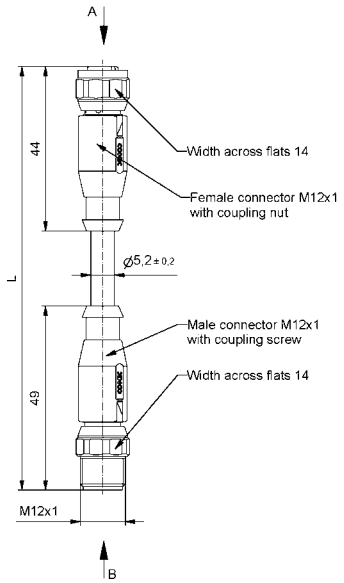

Order data

Cable	Length/L	Description	4-pos Part-no.	Description	5-pos Part-no.
PP, orange 0,34mm²	0,3m	SAL-FB-12-RK4-RS4-0,3/P1	43-10916	SAL-FB-12-RK5-RS5-0,3/P1	43-10920
	0,6m	SAL-FB-12-RK4-RS4-0,6/P1	43-10917	SAL-FB-12-RK5-RS5-0,6/P1	43-10921
	1,5m	SAL-FB-12-RK4-RS4-1,5/P1	43-10918	SAL-FB-12-RK5-RS5-1,5/P1	43-10922
	3,0m	SAL-FB-12-RK4-RS4-3/P1	43-10919	SAL-FB-12-RK5-RS5-3/P1	43-10923

For custom length or quality levels contact factory.

SAL M12x1 Connectors - FB for Food & Beverage Industry

Connecting cable Female connector, angled – Male connector, axial

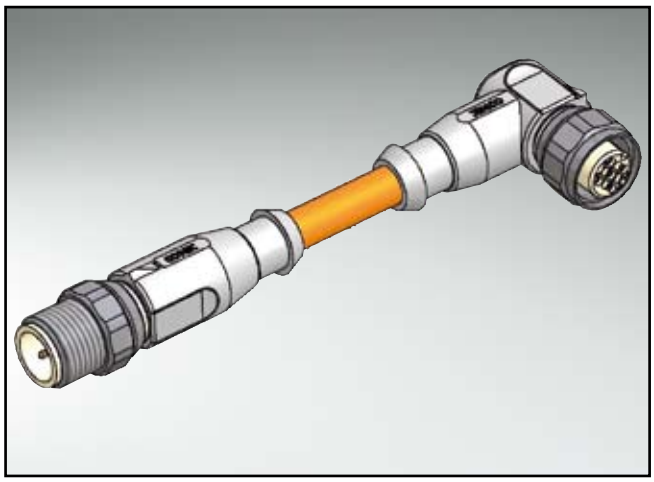

Technical Data

	4-pos	5-pos
Rated voltage	250V	60V
Current rating	4A at +40°C	
Pollution degree	3/2	
Insulation resistance	=$10^9\Omega$	
Degree of protection	IP69K in mated condition	
Temperature range	-30°C to +105°C	
Mating cycles	<=100	

Directive 2002 95 EC „RoHS" Compliant

Pin configuration

4-pos female

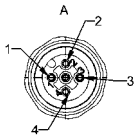

5-pos female

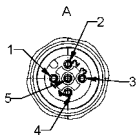

4-pos male

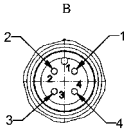

5-pos male

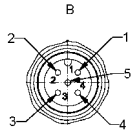

Contact assignment 4 - 5-pos

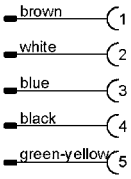

Dimension drawing

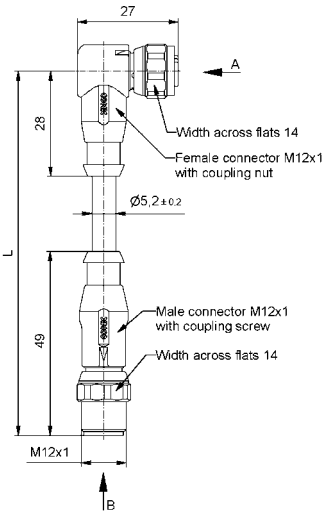

Order data

Cable	Length/L	Description	4-pos Part-no.	Description	5-pos Part-no.
PP, orange 0,34mm²	0,3m	SAL-FB-12-RKW4-RS4-0,3/P1	43-10924	SAL-FB-12-RKW5-RS5-0,3/P1	43-10928
	0,6m	SAL-FB-12-RKW4-RS4-0,6/P1	43-10925	SAL-FB-12-RKW5-RS5-0,6/P1	43-10929
	1,5m	SAL-FB-12-RKW4-RS4-1,5/P1	43-10926	SAL-FB-12-RKW5-RS5-1,5/P1	43-10930
	3,0m	SAL-FB-12-RKW4-RS4-3/P1	43-10927	SAL-FB-12-RKW5-RS5-3/P1	43-10931

For custom length or quality levels contact factory.

SAL M12x1 Connectors - FB for Food & Beverage Industry

Connecting cable

Female connector, angled, 2-fold LED-display – Male connector, axial

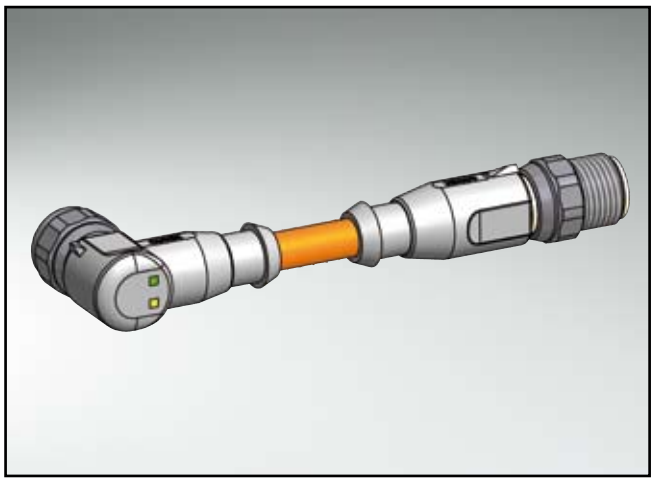

Technical Data

Rated voltage	4-pos 30V
Current rating	4A at +40°C
Pollution degree	3/2
Insulation resistance	=$10^9\Omega$
Degree of protection	IP69K in mated condition
Temperature range	-30°C to +105°C
Mating cycles	<=100

Directive 2002 95 EC „RoHS" Compliant

Pin configuration

4-pos female

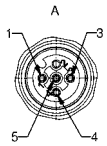

4-pos male

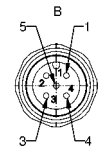

Contact assignment 4-pos

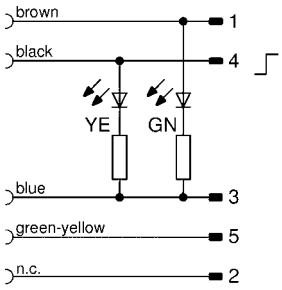

Dimension drawing

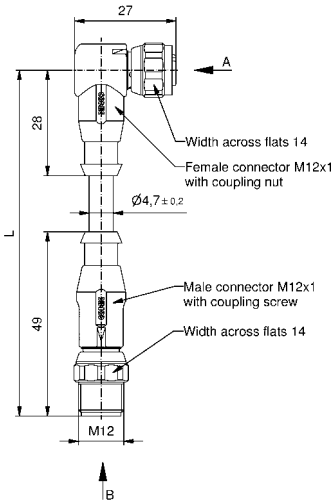

Order data

Cable	Length/L	Description	4-pos Part-no.
PP, orange 0,34mm²	0,3m	SAL-FB-12-RKW5.2-RS5-2L-0,3/P1	43-11648
	0,6m	SAL-FB-12-RKW5.2-RS5-2L-0,6/P1	43-11649
	1,5m	SAL-FB-12-RKW5.2-RS5-2L-1,5/P1	43-11650
	3,0m	SAL-FB-12-RKW5.2-RS5-2L-3/P1	43-11651

For custom length or quality levels contact factory.

SAL M12x1 Connectors - FB for Food & Beverage Industry

Connecting cable Female connector, angled, 3-fold LED-display – Male connector, axial

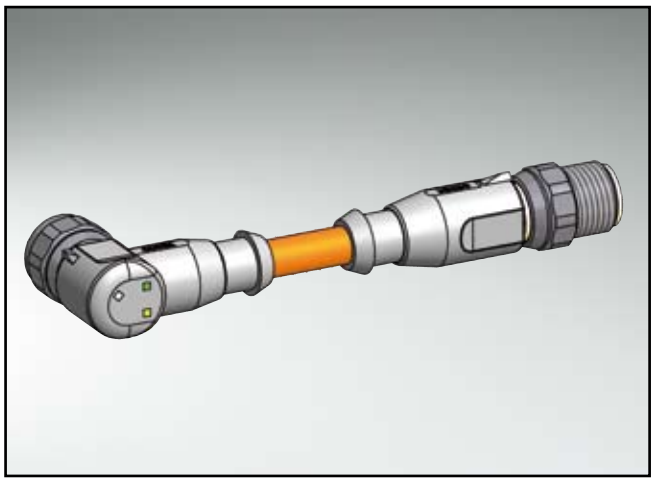

Technical Data

	4-pos	5-pos
Rated voltage	30V	30V
Current rating	4A at +40°C	
Pollution degree	3/2	
Insulation resistance	=$10^9\Omega$	
Degree of protection	IP69K in mated condition	
Temperature range	-30°C to +105°C	
Mating cycles	<=100	

Directive 2002 95 EC „RoHS" Compliant

Pin configuration

4-pos female

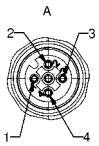

5-pos female

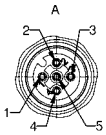

4-pos male

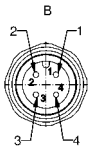

5-pos male

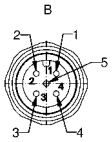

Contact assignment 4-pos

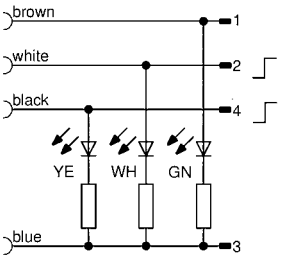

Contact assignment 5-pos

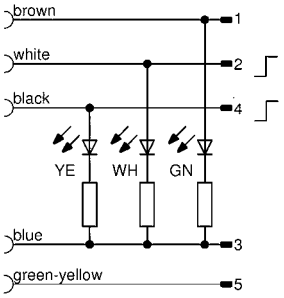

Dimension drawing

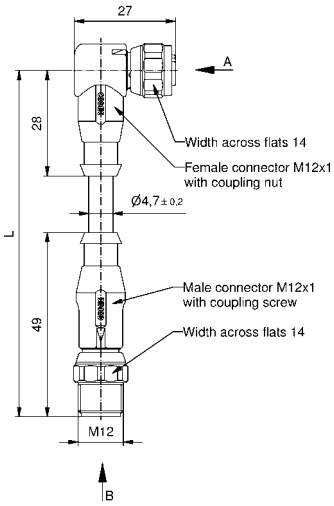

Order data

Cable	Length/L	Description	4-pos Part-no.	Description	5-pos Part-no.
PP, orange 0,34mm²	0,3m	SAL-FB-12-RKW4-RS4-3L-0,3/P1	43-11652	SAL-FB-12-RKW5-RS5-3L-0,3/P1	43-11656
	0,6m	SAL-FB-12-RKW4-RS4-3L-0,6/P1	43-11653	SAL-FB-12-RKW5-RS5-3L-0,6/P1	43-11657
	1,5m	SAL-FB-12-RKW4-RS4-3L-1,5/P1	43-11654	SAL-FB-12-RKW5-RS5-3L-1,5/P1	43-11658
	3,0m	SAL-FB-12-RKW4-RS4-3L-3/P1	43-11655	SAL-FB-12-RKW5-RS5-3L-3/P1	43-11659

For custom length or quality levels contact factory.

SAL M12x1 Connectors - FB for Food & Beverage Industry

Female socket with wire, frontmounting, M16x1,5-thread

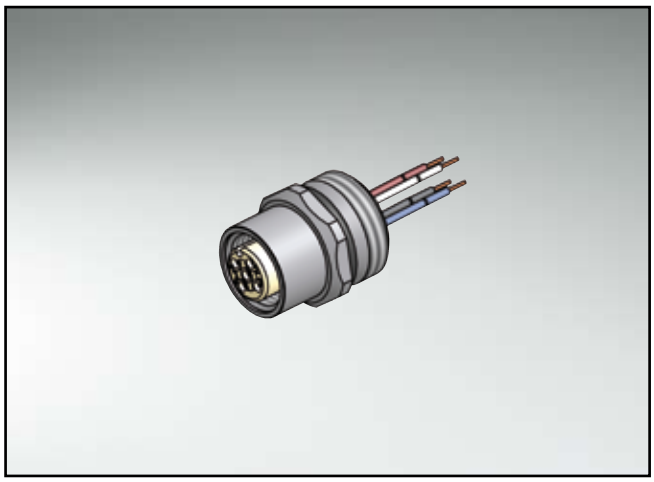

Technical Data

	4-pos	5-pos
Rated voltage	250V	60V
Current rating	4A at +40°C	
Pollution degree	3/2	
Insulation resistance	=$10^9\Omega$	
Degree of protection	IP69K in mated condition	
Temperature range	-30°C to +105°C	
Mating cycles	<=100	

Directive 2002 95 EC „RoHS" Compliant

Pin configuration

4 - 5-pos

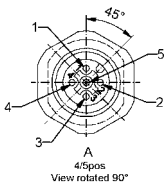

Contact assignment 4 - 5-pos

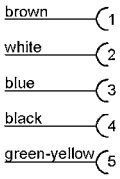

Dimension drawing

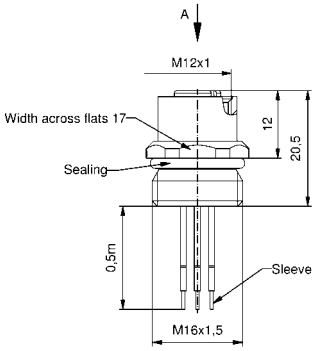

Contact assignment 5.1-pos

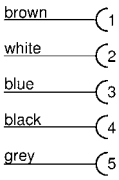

Cut-out front panel

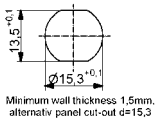

Order data

Wire	Length/L	Description	4-pos Part-no.	Description	5-pos Part-no.
PVC, UL, AWG 24	0,5m	SAL-FB-12-FK4-0,5	43-01018	SAL-FB-12-FK5-0,5	43-01019
	0,5m			SAL-FB-12-FK5.1-0,5	43-01047
Accessories Please order separately		Counter nut	43-12100		

SAL M12x1 Connectors - FB for Food & Beverage Industry

Female socket with wire, frontmounting, PG9-thread

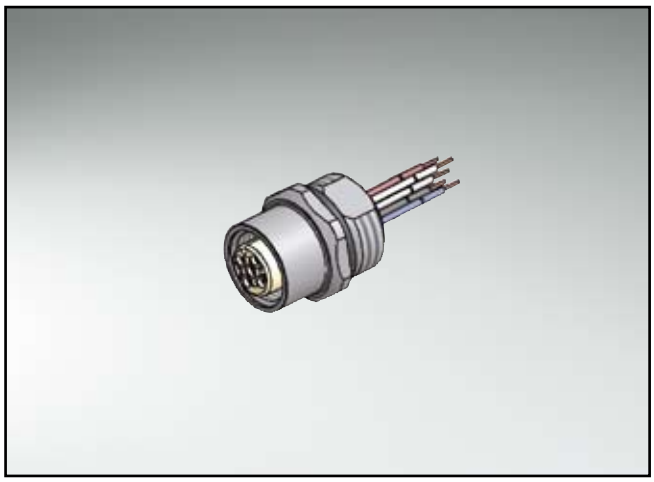

Technical Data

	4-pos	5-pos
Rated voltage	250V	60V
Current rating	4A at +40°C	
Pollution degree	3/2	
Insulation resistance	=$10^9\Omega$	
Degree of protection	IP69K in mated condition	
Temperature range	-30°C to +105°C	
Mating cycles	<=100	

Directive 2002 95 EC „RoHS" Compliant

Pin configuration

4 - 5-pos

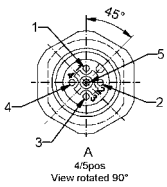

Contact assignment 4 - 5-pos

Dimension drawing

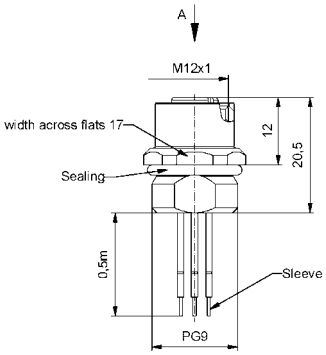

Contact assignment 5.1-pos

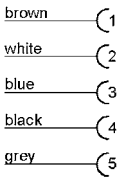

Cut-out front panel

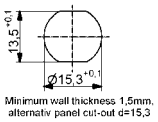

Order data

Wire	Length/L	Description	4-pos Part-no.	Description	5-pos Part-no.
PVC, UL, AWG 24	0,5m	SAL-FB-12-FK4-0,5-9	43-01103	SAL-FB-12-FK5-0,5-9	43-01105
	0,5m			SAL-FB-12-FK5.1-0,5-9	43-01104
Accessories Please order separately		Counter nut	43-12101		

SAL M12x1 Connectors - FB for Food & Beverage Industry

Male socket with wire, frontmounting, M16x1,5-thread

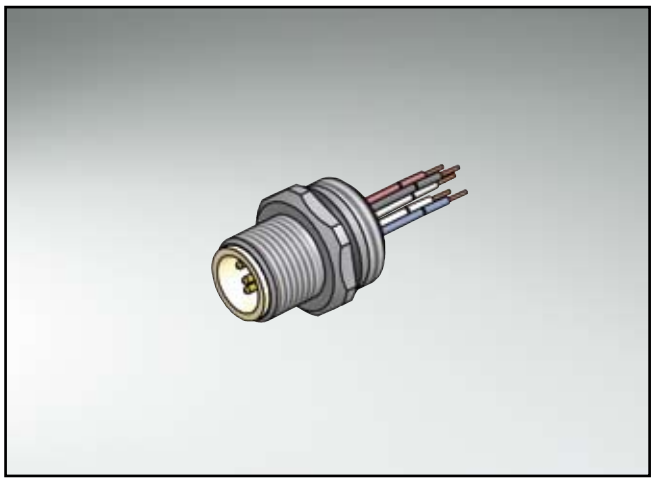

Technical Data

	4-pos	5-pos
Rated voltage	250V	60V
Current rating	4A at +40°C	
Pollution degree	3/2	
Insulation resistance	=$10^9\Omega$	
Degree of protection	IP69K in mated condition	
Temperature range	-30°C to +105°C	
Mating cycles	<=100	

Directive 2002 95 EC „RoHS" Compliant

Pin configuration

4 - 5-pos

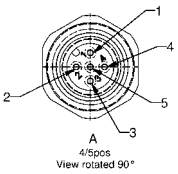

Contact assignment 4 - 5-pos

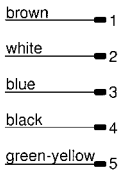

Dimension drawing

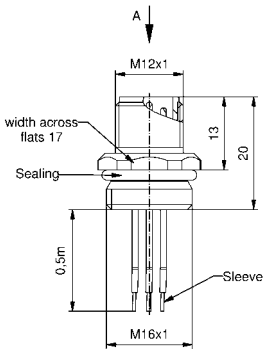

Contact assignment 5.1-pos

Order data

Wire	Length/L	Description	4-pos Part-no.	Description	5-pos Part-no.
PVC, UL, AWG 24	0,5m	SAL-FB-12-FS4-0,5	43-01020	SAL-FB-12-FS5-0,5	43-01021
	0,5m			SAL-FB-12-FS5.1-0,5	43-01051
Accessories Please order separately		Counter nut	43-12100		

SAL M12x1 Connectors - FB for Food & Beverage Industry

Male socket with wire, frontmounting, PG9-thread

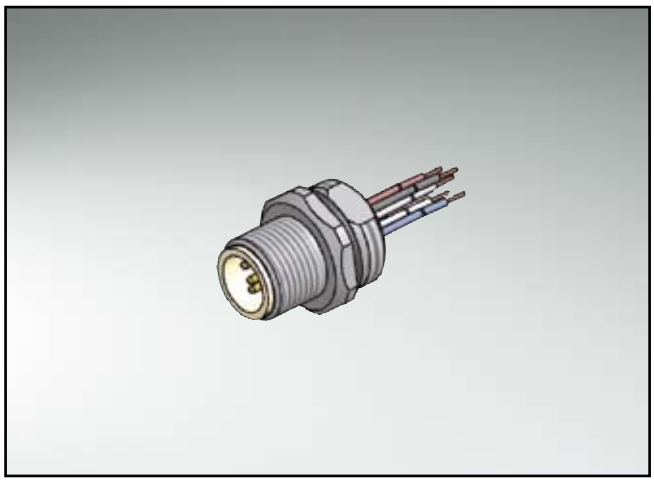

Technical Data

	4-pos	5-pos
Rated voltage	250V	60V
Current rating	4A at +40°C	
Pollution degree	3/2	
Insulation resistance	=$10^9\Omega$	
Degree of protection	IP69K in mated condition	
Temperature range	-30°C to +105°C	
Mating cycles	<=100	

Directive 2002 95 EC „RoHS" Compliant

Pin configuration

4 - 5-pos

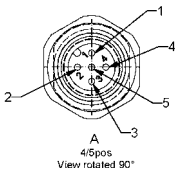

Contact assignment 4 - 5-pos

- brown — 1
- white — 2
- blue — 3
- black — 4
- green-yellow — 5

Dimension drawing

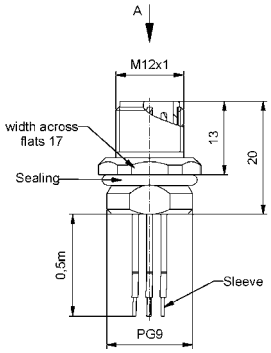

Contact assignment 5.1-pos

- brown — 1
- white — 2
- blue — 3
- black — 4
- grey — 5

Cut-out front panel

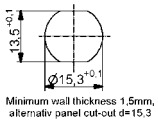

Order data

Wire	Length/L	Description	4-pos Part-no.	Description	5-pos Part-no.
PVC, UL, AWG 24	0,5m	SAL-FB-12-FS4-0,5-9	43-01106	SAL-FB-12-FS5-0,5-9	43-01108
	0,5m			SAL-FB-12-FS5.1-0,5-9	43-01107
Accessories Please order separately		Counter nut	43-12101		

Sensor-Actor-Splitter for Food & Beverage Industry

8-fold Junction box with M23x1-connector, stainless steel housing, I/O-ports 4-pos + Ground

Technical Data

Rated voltage	30V
Rated voltage display	LED-display green
Current rating	2A per signal contact/ 9A Total ampacity
Pollution degree	3/2
Insulation resistance	$=10^9\Omega$
Degree of protection	IP67 in mated condition
Temperature range	-30°C to +85°C
Mating cycles	<=100

Directive 2002 95 EC „RoHS" Compliant

Pin configuration M23

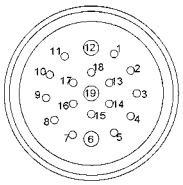

Contact assignment

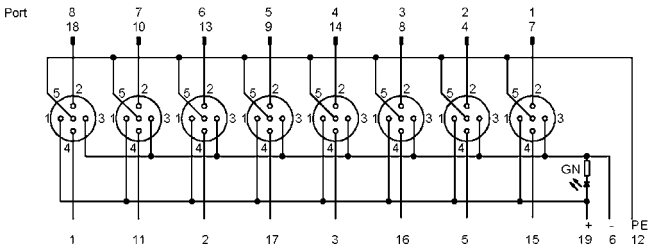

Dimension drawing

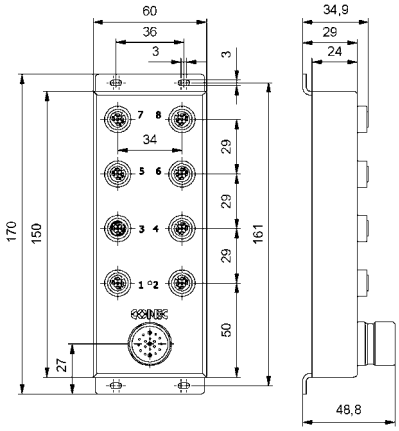

Order data

Description	5-pos Part-no.
SAL-FB-12-8FK5-1L	43-05005

SENSOR-ACTOR-SPLITTER FOR FOOD & BEVERAGE INDUSTRY

8-fold Junction box with homerun-cable, stainless steel housing, I/O-ports 4-pos + Ground

TECHNICAL DATA

Rated voltage	30V
Rated voltage display	LED-display green
Current rating	2A per signal contact/ 9A Total ampacity
Pollution degree	3/2
Insulation resistance	$=10^9\Omega$
Degree of protection	IP67 in mated condition
Temperature range	-30°C to +85°C
Mating cycles	<=100

Directive 2002 95 EC „RoHS" Compliant

CONTACT ASSIGNMENT

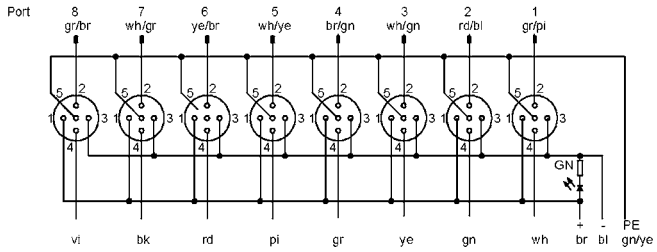

DIMENSION DRAWING

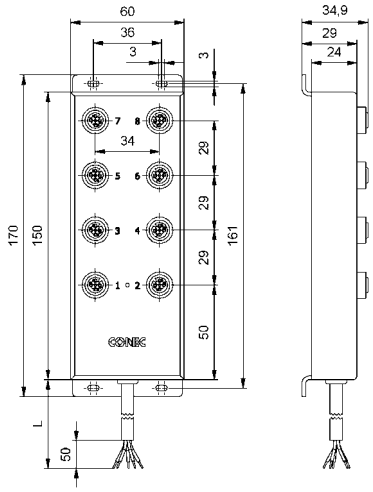

ORDER DATA

Cable	Length/L	Description	5-pos Part-no.
PVC, halogenfree black, LiYY 16x0,34/3x1,0	5m	SAL-FB-12-8FK5-1L-5/A2	43-05002
	10m	SAL-FB-12-8FK5-1L-10/A2	43-05003

For custom length or quality levels contact factory.

Sensor-Actor-Splitter for Food & Beverage Industry

4-fold Junction box with M23x1-connector, stainless steel housing, I/O-ports 4-pos + Ground

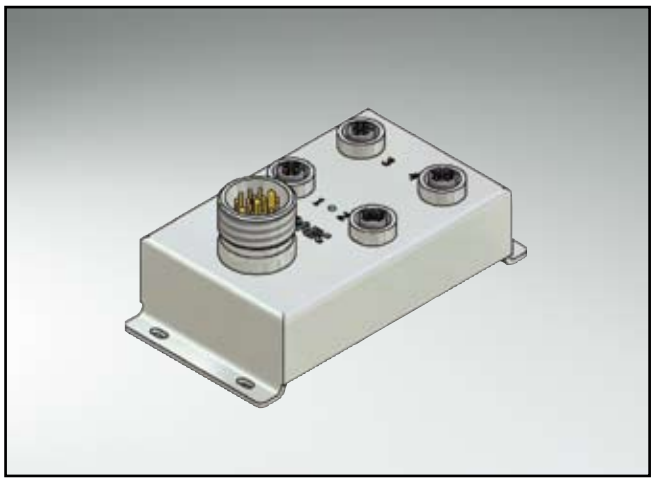

Technical Data

Rated voltage	30V
Rated voltage display	LED-display green
Current rating	2A per signal contact/ 9A Total ampacity
Pollution degree	3/2
Insulation resistance	$=10^9\Omega$
Degree of protection	IP67 in mated condition
Temperature range	-30°C to +85°C
Mating cycles	<=100

Directive 2002 95 EC „RoHS" Compliant

Pin configuration M23

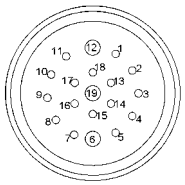

Contact assignment

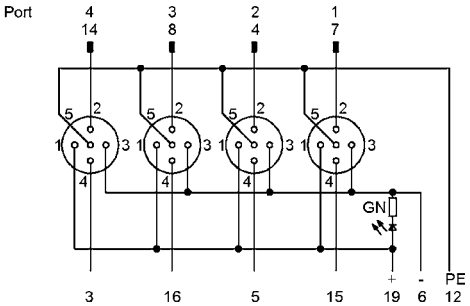

Dimension drawing

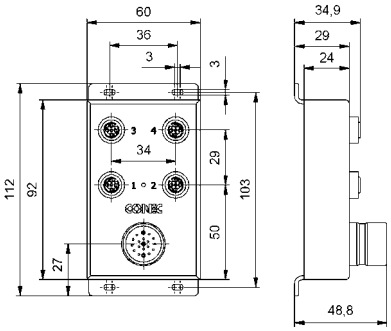

Order data

Description	5-pos Part-no.
SAL-FB-12-4FK5-1L	43-05004

SENSOR-ACTOR-SPLITTER FOR FOOD & BEVERAGE INDUSTRY

4-fold Junction box with homerun-cable, stainless steel housing, I/O-ports 4-pos + Ground

TECHNICAL DATA

Rated voltage	30V
Rated voltage display	LED-display green
Current rating	2A per signal contact/ 9A Total ampacity
Pollution degree	3/2
Insulation resistance	$=10^9\Omega$
Degree of protection	IP67 in mated condition
Temperature range	-30°C to +85°C
Mating cycles	<=100

Directive 2002 95 EC „RoHS" Compliant

CONTACT ASSIGNMENT

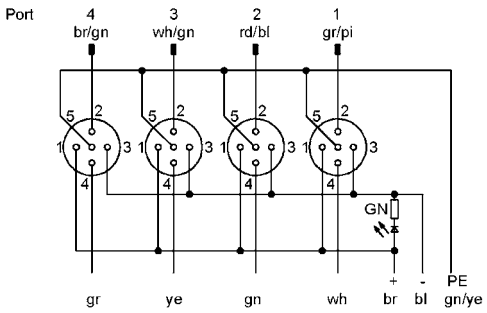

DIMENSION DRAWING

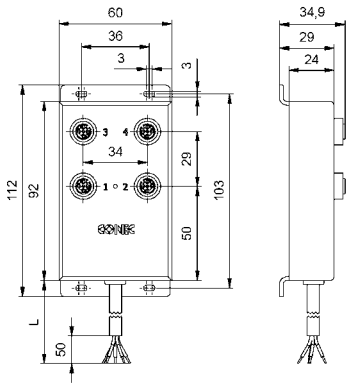

ORDER DATA

Cable	Length/L	Description	5-pos Part-no.
PVC, halogenfree black, LiYY 8x0,34/3x1,0	5m	SAL-FB-12-4FK5-1L-5/A2	43-05000
	10m	SAL-FB-12-4FK5-1L-10/A2	43-05001

For custom length or quality levels contact factory.

Section 6

Bus systems M12x1

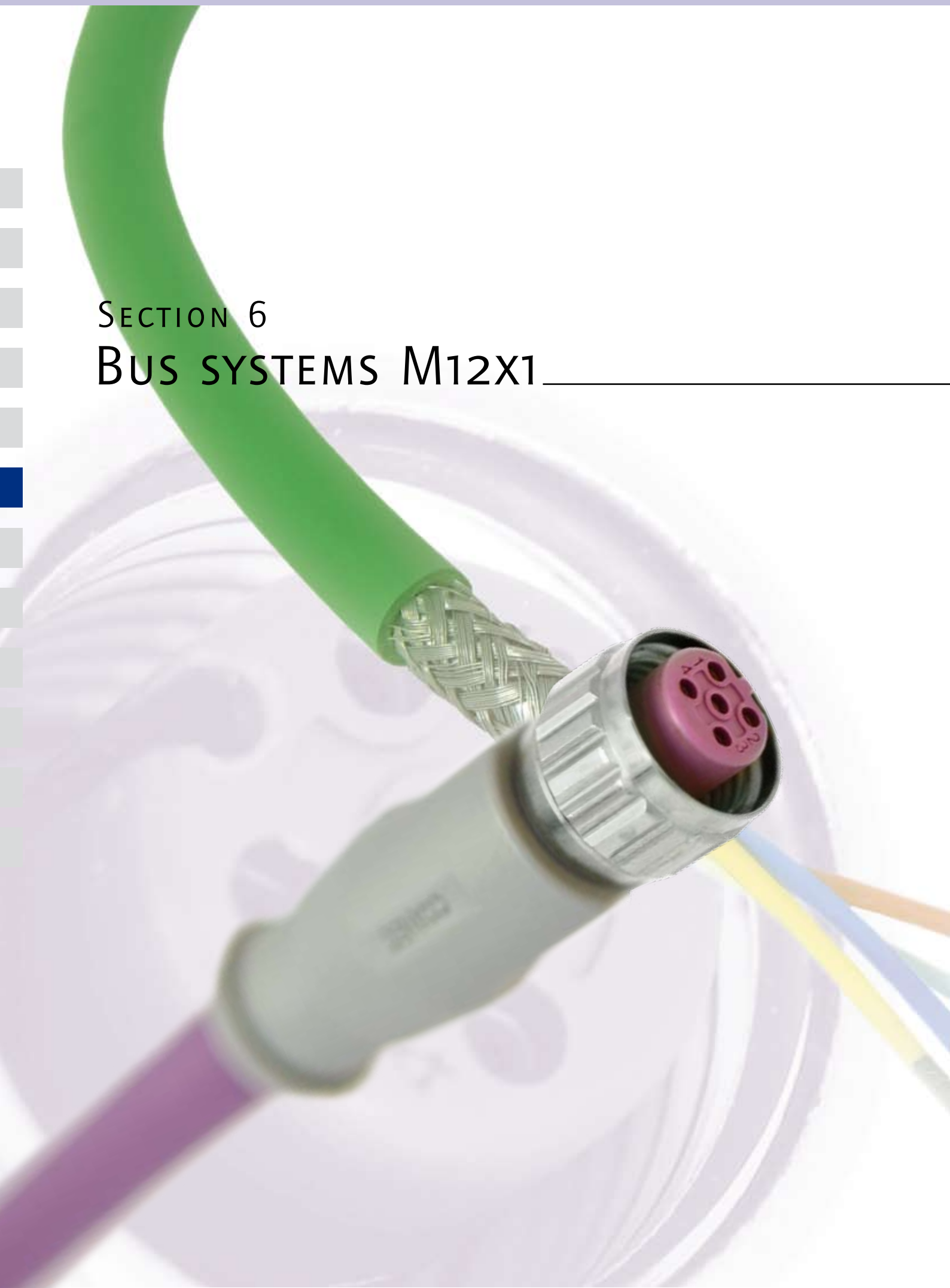

Bus technology has advanced over the last few years in industrial automation. The connectors required for data transmission are very bus-specific in their design. To access the very complex world of bus technology, CONEC offers connectors for Profibus DP and Industrial Ethernet.

Profibus is a manufacture-dependent, open field bus system for a variety of applications in manufacturing, processing and building automation.

Industrial Ethernet is the general term for all applications that use the Ethernet standard to network devices used in industrial automation. In industrial applications, networks must operate without interruption under extreme conditions, e.g. electromagnetic interference, very high constant temperatures as well as high mechanical specifications. Industrial Ethernet closes the circle, as it were, and creates a complete infrastructure, which stretches from the office to the machinery or even to the sensor.

For both bus systems, CONEC offers special M12x1 connectors with corresponding coding which meets the guidelines of the PNO (Profibus User Organization) and the IEC 61076-2-101 Ad. 1.

The coding used for these products (B and D coding) prevent in-correct connections using standard M12x1 components.

SAL M12x1 Connectors overmoulded - Profibus DP/ Industrial Ethernet 100MHz

Nomenclature

S A L - 1 2 B - R K W 4 - 3 / G 4

SAL
Sensor Actor Line

Installation size
12 = M12x1

Coding
B = B-coding
D = D-coding

Building
R = Circular connector

Configuration
K = Female connector
S = Male connector

Building
= Axial
W = Angled

Number of poles
4 = 4-pos

Cable length
XX = Length [m]

Cable quality
G4 = TPU, violet, UL, AWG 22
G5 = PVC, violet, UL, AWG 22
G6 = TPU, green, UL, AWG 22
G7 = TPU, violet, draigchain-ready, UL, AWG 24

SAL M12x1 Connectors overmoulded - Profibus DP/ Industrial Ethernet 100MHz

Technical Data

Basic material	
Contact	CuZn
Contact plating	Nickel-plated, gold-plated
Contact carrier	TPU GF, UL 94
Moulding body	TPU, self-extinguishing
Sealing	**only Profibus**: FPM
Coupling nut/-srew	CuZn, nickel-plated

Information on the following pages are basing on below mentioned IEC-standards.	
Rated voltage	IEC 61076-2-101
Current rating	IEC 61076-2-101
Insulation resistance	IEC 60512-2
Pollution degree	IEC 60664-1
Degree of protection	IEC 60529
Temperature range	IEC 60664-1
Mating cycles	IEC 61076-2-101

Technical subject to change without notice.

SAL M12x1 Y-Splitter - Profibus DP

Nomenclature

S A L - 1 2 B - R S 5 - 1 2 - R K 5 - 1 2 - R S 5

SAL
Sensor Actor Line

Connection

Installation size
12 = M12x1

Coding
B = B-coding

Building
R = Circular connector

Configuration
S = Male connector

Number of poles
5 = 5-pos

Allocation

Installation size
12 = M12x1

Building
R = Circular connector

Configuration
K = Female connector

Number of poles
5 = 5-pos

Installation size
12 = M12x1

Building
R = Circular connector

Configuration
S = Male connector

Number of poles
5 = 5-pos

SAL M12x1 Y-Splitter - Profibus DP

Technical Data

Basic material	
Contact	Female connector: CuZn / Male connector: CuSn (depending on configuration)
Contact plating	Nickel-plated, gold-plated
Contact carrier	PBT GF, UL 94
Moulding body	Thermoplastic elastomere
Sealing	FPM

Information on the following pages are basing on below mentioned IEC-standards.

Rated voltage	IEC 61076-2-101
Current rating	IEC 61076-2-101
Insulation resistance	IEC 60512-2
Pollution degree	IEC 60664-1
Degree of protection	IEC 60529
Temperature range	IEC 60664-1
Mating cycles	IEC 61076-2-101

Technical subject to change without notice.

SAL M12x1 Connectors field-attachable - Profibus DP

Nomenclature

S A L - 1 2 B - R K W C 4 - S 8

SAL
Sensor Actor Line

Installation size
12 = M12x1

Coding
B = B-coding

Building
R = Circular connector

Configuration
K = Female connector
S = Male connector

Building
= Standard
W = Angled

Building
C = Field-attachable

Number of poles
4 = 4-pos

Type of connection
S = Screw termination
K = Clamp connection

max. cable outer diameter
8 = 6-8,5mm Cable sealing

SAL M12x1 Connectors field-attachable - Profibus DP

Technical Data

Basic material	
Contact	CuZn
Contact plating	Nickel-plated, gold-plated
Contact carrier	PA6, UL 94
Housing	Die Cast, nickel-plated
Clamp-/srew contact	Stainless steel, nickel-plated
Cable sealing	Elastomere
O-Ring	FPM
Coupling nut/-screw	Die Cast, nickel-plated

Information on the following pages are basing on below mentioned IEC-standards.

Rated voltage	IEC 61076-2-101
Current rating	IEC 61076-2-101
Insulation resistance	IEC 60512-2
Pollution degree	IEC 60664-1
Degree of protection	IEC 60529
Temperature range	IEC 60664-1
Mating cycles	IEC 61076-2-101

Technical subject to change without notice.

SAL M12x1 Sockets - Profibus DP / Industrial Ethernet 100MHz

Nomenclature

S A L - 1 2 B - F K P W 4 - 0,5 - 9

SAL
Sensor Actor Line

Installation size
12 = M12

Coding
B = B-coding
D = D-coding

Building
F = Socket

Configuration
K = Female connector
S = Male connector

Assembly
= Frontmounting
P = Positioning possible, Frontmounting
H = Backmounting

Building
= Axial
W = Angled

Number of poles
4 = 4-pos

Type of connection
P5,5 = Length [mm]
P12 = Length [mm]
XX = Lenght of wire [m]
X5,5 = Installation height [mm]
X10 = Installation height [mm]

Screw connection
= M16x1,5
9 = PG9

SAL M12x1 Sockets - Profibus DP / Industrial Ethernet 100MHz

Technical Data

Basic material	
Contact	CuZn
Contact plating	Nickel-plated, gold-plated
Contact carrier	PBT GF, UL 94 / PA GF, UL 94
Sealing	FPM
Counter nut	CuZn, nickel-plated
Socket housing	CuZn, nickel-plated
Grouting	Polyurethane-resin, UL 94
Shroud	CuSnG
Shroud plated	Sn plated

Information on the following pages are basing on below mentioned IEC-standards.

Rated voltage	IEC 61076-2-101
Current rating	IEC 61076-2-101
Insulation resistance	IEC 60512-2
Pollution degree	IEC 60664-1
Degree of protection	IEC 60529
Temperature range	IEC 60664-1
Mating cycles	IEC 61076-2-101

Technical subject to change without notice.

SAL SUB D

Nomenclature

S A L - S D - S K S W 9 F

SAL
Sensor Actor Line

Installation size
SD = SUB-D

Building
S = Spezific

Building
= without programming interface
K = with programming interface

Configuration
S = Male connector

Building
= Axial
W = Angled

Number of poles
9 = 9-pos

Cable-connection
= Quick connection IDC, inflexible conductor
F = Quick connection IDC, flexible conductor
S = Screw termination

SAL SUB D

Technical Data

Basic material	
Contact SUB D	CuZn
Contact plating SUB D	Nickel-plated, gold-plated
IDC-Contact	CuSn
Housing	Thermoplastic chrome-plated

Information on the following pages are basing on below mentioned IEC-standards.

Degree of protection	IEC 60529
Temperature range	IEC 60664-1

Technical subject to change without notice.

SAL M12x1 Connectors - B-coding Profibus DP

Female connector, axial with 360°-shielding

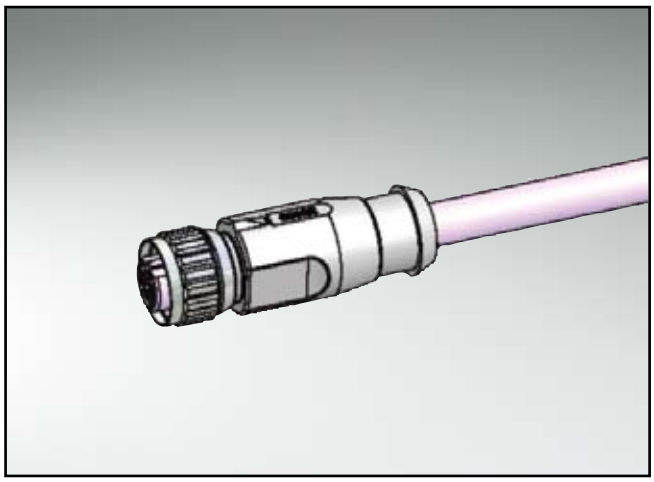

Technical Data

Rated voltage	4-pos / 160V
Current rating	4A at +40°C
Pollution degree	3/2
Insulation resistance	=$10^9\Omega$
Degree of protection	IP67 in mated condition
Temperature range	G4: -30°C to +70°C G5/G7: -30°C to +80°C
Mating cycles	<=100

Directive 2002 95 EC „RoHS" Compliant

Pin configuration

4-pos

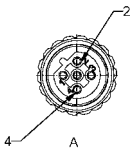

Contact assignment 4-pos

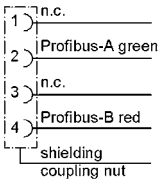

Dimension drawing

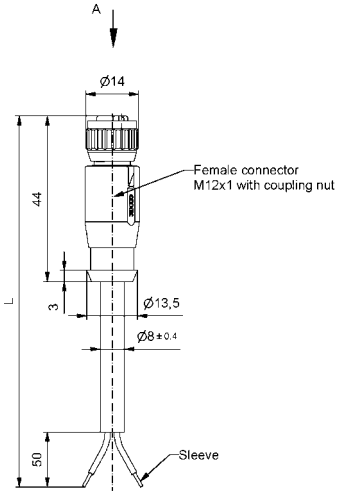

Order data

Cable	Length/L	Description	4-pos Part-no.
PVC, UL violet (RAL 4001) 2xAWG 22	2m	SAL-12B-RK4.1-2/G5	43-11601
	3m	SAL-12B-RK4.1-3/G5	43-11602
	5m	SAL-12B-RK4.1-5/G5	43-11603
	10m	SAL-12B-RK4.1-10/G5	43-11604
TPU, UL violet (RAL 4001) 2xAWG 22	2m	SAL-12B-RK4.1-2/G4	43-10932
	3m	SAL-12B-RK4.1-3/G4	43-10933
	5m	SAL-12B-RK4.1-5/G4	43-10934
	10m	SAL-12B-RK4.1-10/G4	43-10935
TPU, UL high flexible, halogenfree, violet (RAL 4001) 2xAWG 24	2m	SAL-12B-RK4.1-2/G7	43-11605
	3m	SAL-12B-RK4.1-3/G7	43-11606
	5m	SAL-12B-RK4.1-5/G7	43-11607
	10m	SAL-12B-RK4.1-10/G7	43-11608

For custom length or quality levels contact factory.

SAL M12x1 Connectors - B-coding Profibus DP

Male connector, axial with 360°-shielding

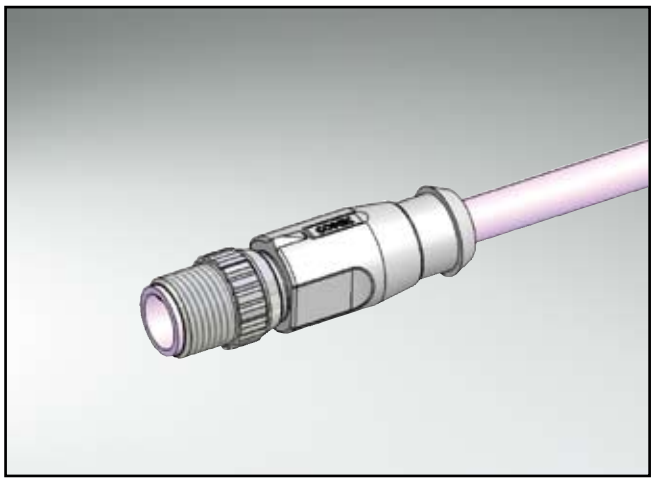

Technical Data

Rated voltage	4-pos 160V
Current rating	4A at +40°C
Pollution degree	3/2
Insulation resistance	=$10^9\Omega$
Degree of protection	IP67 in mated condition
Temperature range	G4: -30°C to +70°C G5/G7: -30°C to +80°C
Mating cycles	<=100

Directive 2002 95 EC „RoHS" Compliant

Pin configuration

4-pos

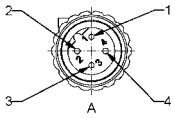

Contact assignment 4-pos

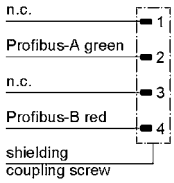

Dimension drawing

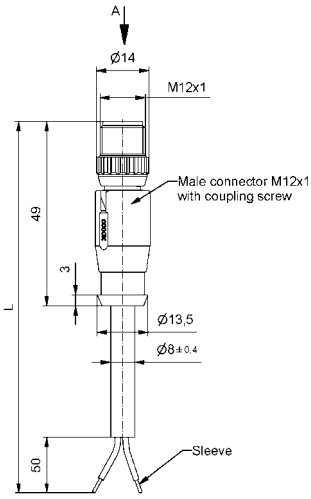

Order data

Cable	Length/L	Description	4-pos Part-no.
PVC, UL violet (RAL 4001) 2xAWG 22	2m	SAL-12B-RS4.1-2/G5	43-11609
	3m	SAL-12B-RS4.1-3/G5	43-11610
	5m	SAL-12B-RS4.1-5/G5	43-11611
	10m	SAL-12B-RS4.1-10/G5	43-11612
TPU, UL violet (RAL 4001) 2xAWG 22	2m	SAL-12B-RS4.1-2/G4	43-10936
	3m	SAL-12B-RS4.1-3/G4	43-10937
	5m	SAL-12B-RS4.1-5/G4	43-10938
	10m	SAL-12B-RS4.1-10/G4	43-10939
TPU, UL high flexible, halogenfree, violet (RAL 4001) 2xAWG 24	2m	SAL-12B-RS4.1-2/G7	43-11613
	3m	SAL-12B-RS4.1-3/G7	43-11614
	5m	SAL-12B-RS4.1-5/G7	43-11615
	10m	SAL-12B-RS4.1-10/G7	43-11616

For custom length or quality levels contact factory.

SAL M12x1 Connectors - B-coding Profibus DP

Connecting cable with 360°-shielding

Female connector, axial – Male connector, axial

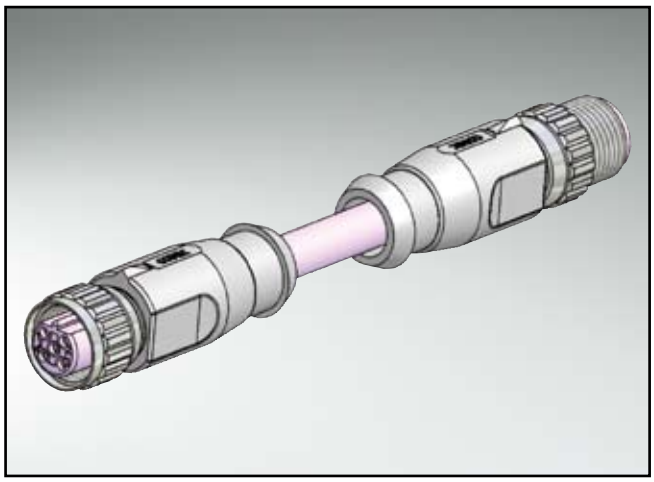

Technical Data

Rated voltage	4-pos / 160V
Current rating	4A at +40°C
Pollution degree	3/2
Insulation resistance	=$10^9\Omega$
Degree of protection	IP67 in mated condition
Temperature range	G4: -30°C to +70°C G5/G7: -30°C to +80°C
Mating cycles	<=100

Directive 2002 95 EC „RoHS" Compliant

Pin configuration

4-pos female

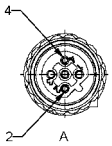

4-pos male

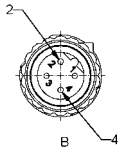

Contact assignment 4-pos

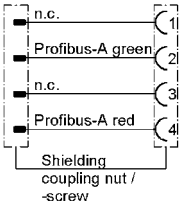

Dimension drawing

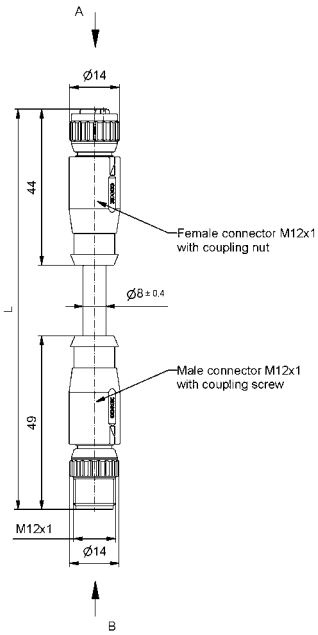

Order data

Cable	Length/L	Description	4-pos Part-no.
PVC, UL violet (RAL 4001) 2xAWG 22	0,3m	SAL-12B-RK4.1-RS4.1-0,3/G5	43-11617
	0,6m	SAL-12B-RK4.1-RS4.1-0,6/G5	43-11618
	1,5m	SAL-12B-RK4.1-RS4.1-1,5/G5	43-11619
	3,0m	SAL-12B-RK4.1-RS4.1-3/G5	43-11620
TPU, UL violet (RAL 4001) 2xAWG 22	0,3m	SAL-12B-RK4.1-RS4.1-0,3/G4	43-10940
	0,6m	SAL-12B-RK4.1-RS4.1-0,6/G4	43-10941
	1,5m	SAL-12B-RK4.1-RS4.1-1,5/G4	43-10942
	3,0m	SAL-12B-RK4.1-RS4.1-3/G4	43-10943
TPU, UL high flexible, halogenfree, violet (RAL 4001) 2xAWG 24	0,3m	SAL-12B-RK4.1-RS4.1-0,3/G7	43-11228
	0,6m	SAL-12B-RK4.1-RS4.1-0,6/G7	43-11621
	1,5m	SAL-12B-RK4.1-RS4.1-1,5/G7	43-11622
	3,0m	SAL-12B-RK4.1-RS4.1-3/G7	43-11623

For custom length or quality levels contact factory.

SAL Y-Splitter Profibus DP

Male connector M12x1 – Female connector M12x1 – Male connector M12x1

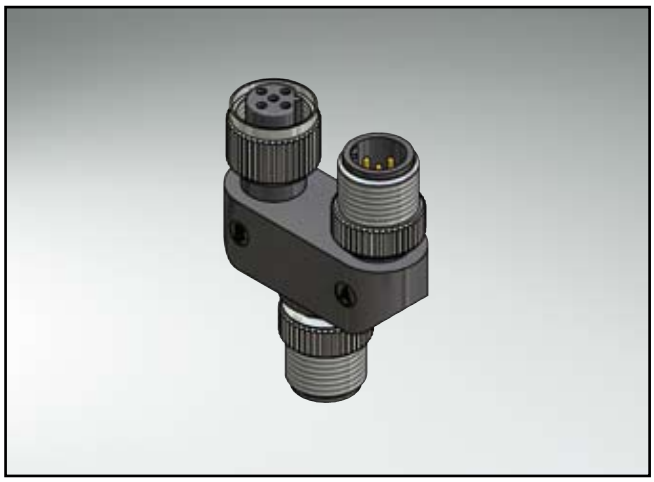

Technical Data

Rated voltage	4-pos 60V
Current rating	4A at +40°C
Pollution degree	3/2
Insulation resistance	=$10^9\Omega$
Degree of protection	IP65 in mated condition
Temperature range	-30°C to +85°C
Mating cycles	<=100

Directive 2002 95 EC „RoHS" Compliant

Pin configuration

4-pos male

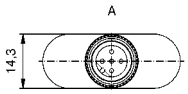

4-pos female/male

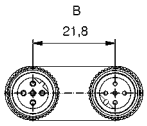

Contact assignment 4-pos

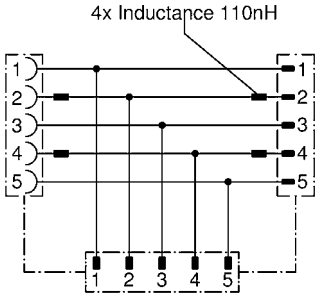

Dimension drawing

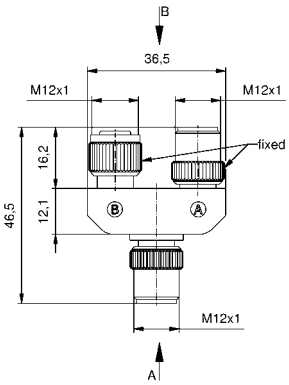

Order data

Description	4-pos Part-no.
SAL-12B-RS5-RK5-RS5	43-11210

SAL M12x1 Connectors - B-coding Profibus DP

Female connector, axial, field-attachable, 360°-shielding, with clamp connection

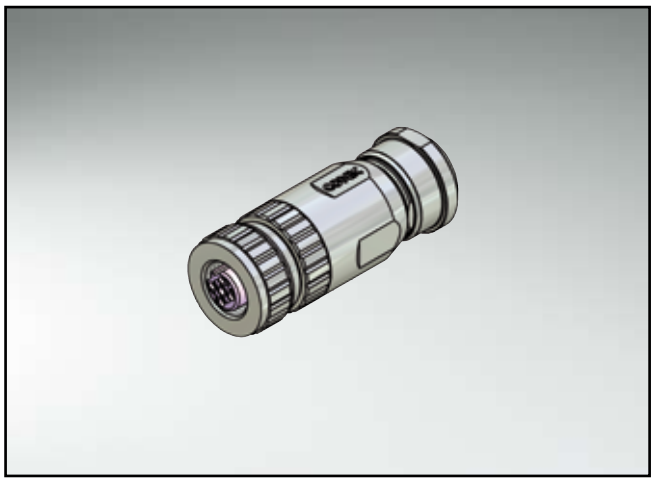

Technical Data

Rated voltage	4-pos / 250V
Current rating	4A at +40°C
Pollution degree	3/2
Insulation resistance	=$10^9\Omega$
Degree of protection	IP67 in mated condition
Temperature range	-30°C to +85°C
Mating cycles	<=100

Directive 2002 95 EC „RoHS" Compliant

Pin configuration

4-pos

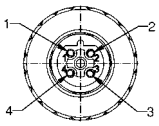

Dimension drawing

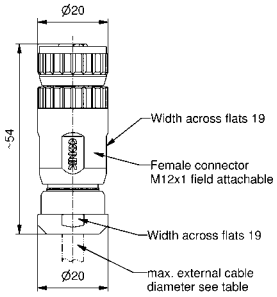

Order data

Cable outer diameter	Description	4-pos Part-no.
max. Ø6-8,5mm	SAL-12B-RKC4-K8	43-00073

SAL M12x1 Connectors - B-coding Profibus DP

Female connector, axial, field-attachable, 360°-shielding, with screw termination

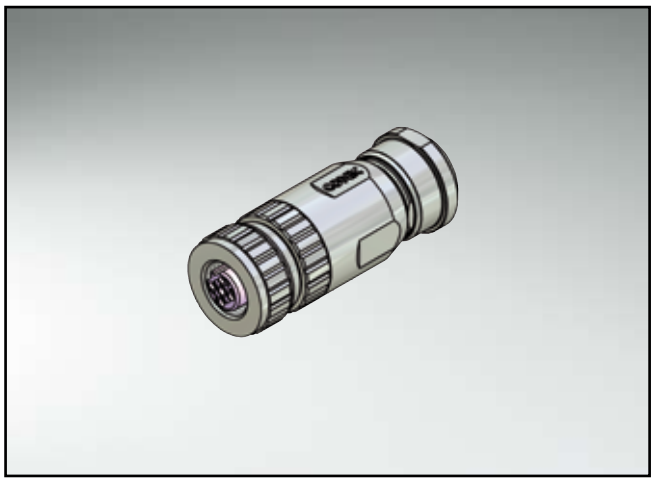

Technical Data

Rated voltage	4-pos 250V
Current rating	4A at +40°C
Pollution degree	3/2
Insulation resistance	=$10^9\Omega$
Degree of protection	IP67 in mated condition
Temperature range	-30°C to +85°C
Mating cycles	<=100

Directive 2002 95 EC „RoHS" Compliant

Pin configuration

4-pos

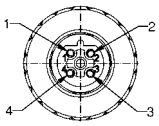

Dimension drawing

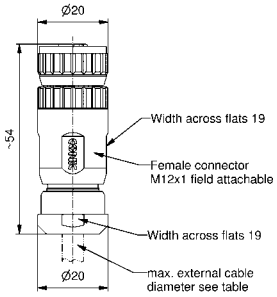

Order data

Cable outer diameter	Description	4-pos Part-no.
max. Ø6-8,5mm	SAL-12B-RKC4-S8	43-00075

SAL M12x1 Connectors - B-coding Profibus DP

Male connector, axial, field-attachable, 360°-shielding, with clamp connection

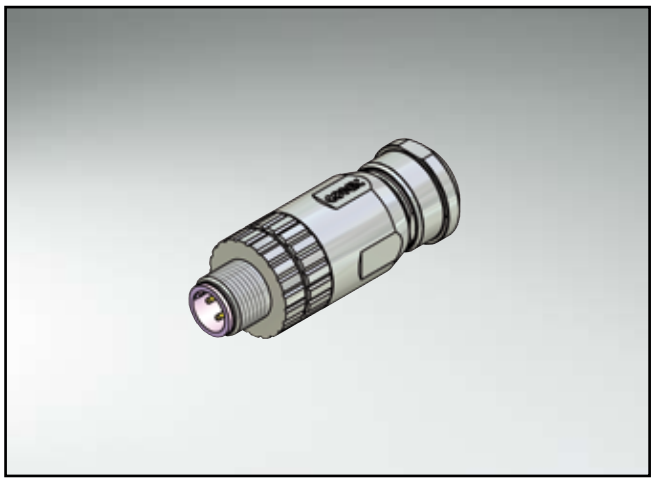

Technical Data

Rated voltage	4-pos 250V
Current rating	4A at +40°C
Pollution degree	3/2
Insulation resistance	=$10^9\Omega$
Degree of protection	IP67 in mated condition
Temperature range	-30°C to +85°C
Mating cycles	<=100

Directive 2002 95 EC
„RoHS"
Compliant

Pin configuration

4-pos

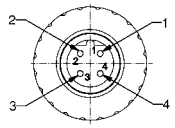

Dimension drawing

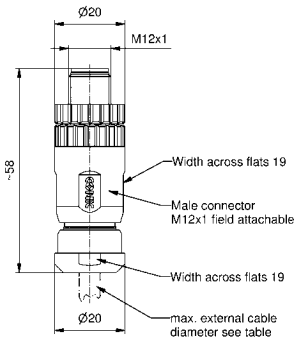

Order data

Cable outer diameter	Description	4-pos Part-no.
max. Ø6-8,5mm	SAL-12B-RSC4-K8	43-00077

SAL M12x1 Connectors - B-coding Profibus DP

Male connector, axial, field-attachable, 360°-shielding, with screw termination

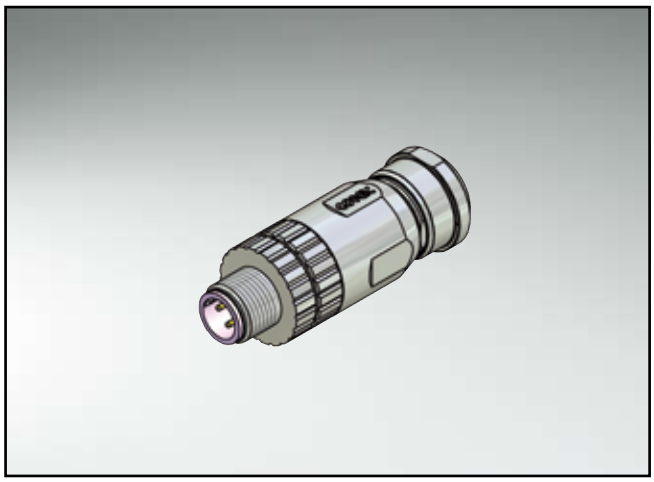

Technical Data

Rated voltage	4-pos 250V
Current rating	4A at +40°C
Pollution degree	3/2
Insulation resistance	=$10^9\Omega$
Degree of protection	IP67 in mated condition
Temperature range	-30°C to +85°C
Mating cycles	<=100

Directive 2002 95 EC
„RoHS"
Compliant

Pin configuration

4-pos

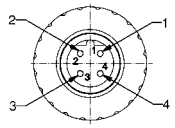

Dimension drawing

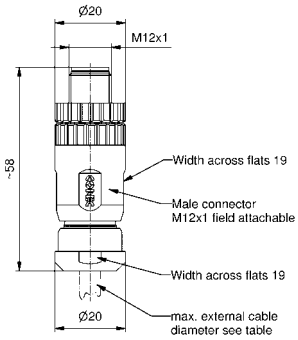

Order data

Cable outer diameter	Description	4-pos Part-no.
max. Ø6-8,5mm	SAL-12B-RSC4-S8	43-00079

SAL M12x1 Connectors - B-coding Profibus DP

Female socket with wire, frontmounting, M16x1,5-thread

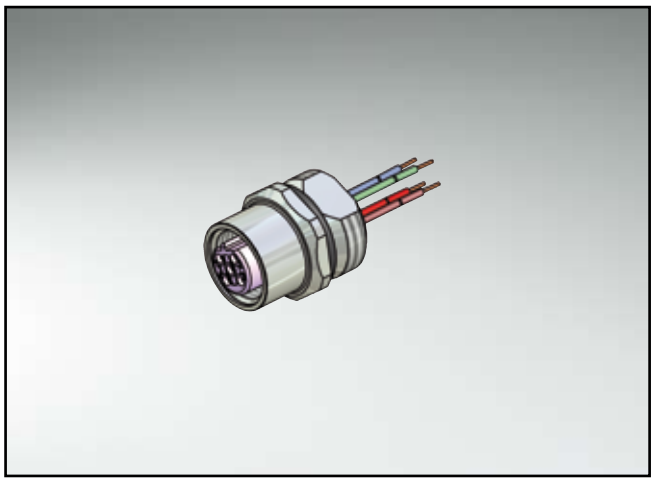

Technical Data

Rated voltage	4-pos / 250V
Current rating	4A at +40°C
Pollution degree	3/2
Insulation resistance	=$10^9\Omega$
Degree of protection	IP67 in mated condition
Temperature range	-30°C to +70°C
Mating cycles	<=100

Directive 2002 95 EC „RoHS" Compliant

Pin configuration

4-pos

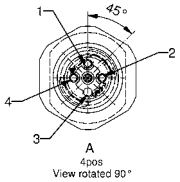

Contact assignment 4-pos

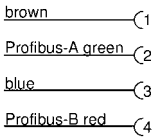

Dimension drawing

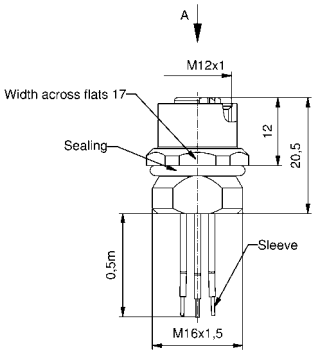

Cut-out front panel

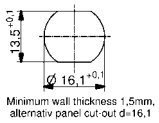

Order data

wire	Length/L	Description	4-pos Part-no.
PVC, UL AWG 22	0,5m	SAL-12B-FK4.3-0,5	43-01042
Accessories Please order separately		Counter nut	43-01155

SAL M12x1 Connectors - B-coding Profibus DP

Female socket with wire, frontmounting, PG9-thread

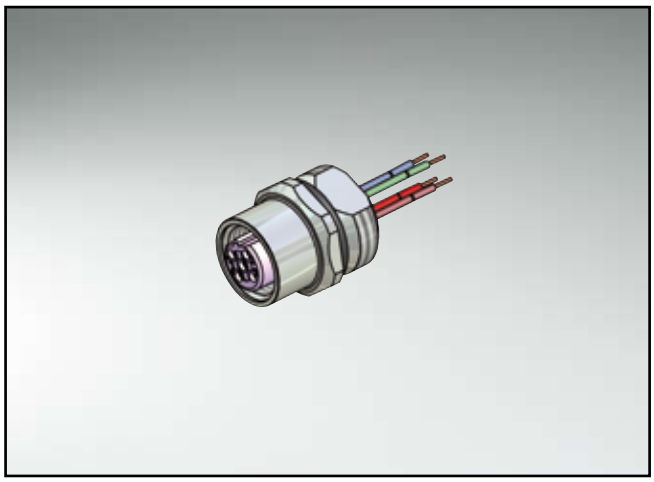

Technical Data

Rated voltage	4-pos / 250V
Current rating	4A at +40°C
Pollution degree	3/2
Insulation resistance	=$10^9\Omega$
Degree of protection	IP67 in mated condition
Temperature range	-30°C to +70°C
Mating cycles	<=100

Directive 2002 95 EC „RoHS" Compliant

Pin configuration

4-pos

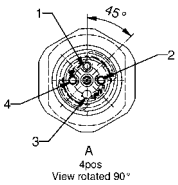

Contact assignment 4-pos

brown	1
Profibus-A green	2
blue	3
Profibus-B red	4

Dimension drawing

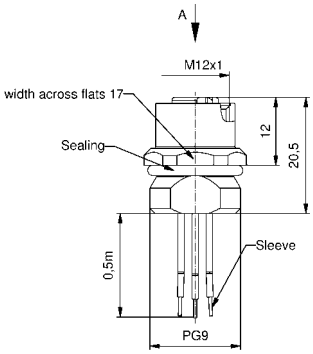

Cut-out front panel

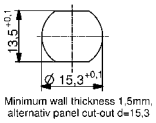

Order data

wire	Length/L	Description	4-pos Part-no.
PVC, UL AWG 22	0,5m	SAL-12B-FK4.3-0,5-9	43-01109
Accessories Please order separately		Counter nut	43-01156

SAL M12x1 Connectors - B-coding Profibus DP

Male socket with wire, frontmounting, M16x1,5-thread

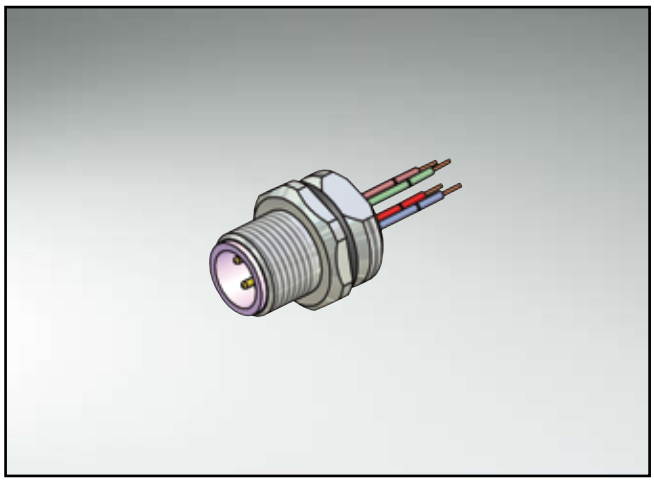

Technical Data

Rated voltage	4-pos / 250V
Current rating	4A at +40°C
Pollution degree	3/2
Insulation resistance	=$10^9\Omega$
Degree of protection	IP67 in mated condition
Temperature range	-30°C to +70°C
Mating cycles	<=100

Directive 2002 95 EC „RoHS" Compliant

Pin configuration

4-pos

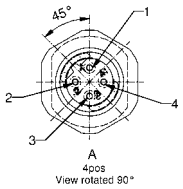

Contact assignment 4-pos

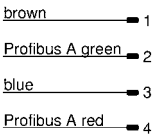

Dimension drawing

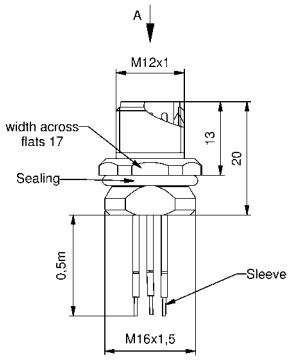

Cut-out front panel

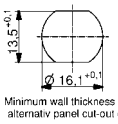

Order data

wire	Length/L	Description	4-pos Part-no.
PVC, UL AWG 22	0,5m	SAL-12B-FS4.3-0,5	43-01043
Accessories Please order separately		Counter nut	43-01155

SAL M12x1 Connectors - B-coding Profibus DP

Male socket with wire, frontmounting, PG9-thread

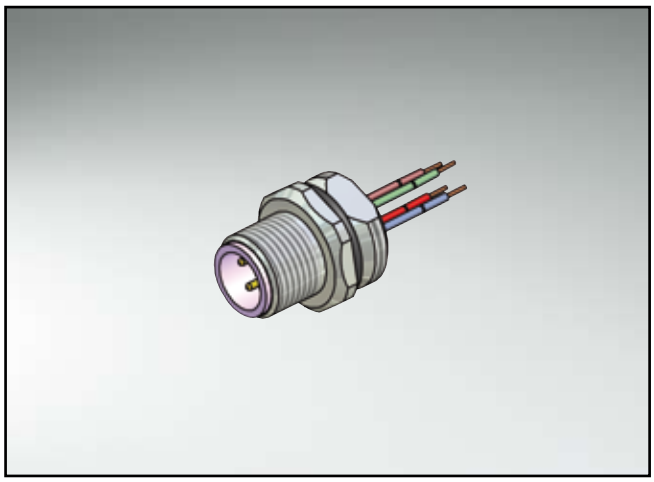

Technical Data

Rated voltage	4-pos / 250V
Current rating	4A at +40°C
Pollution degree	3/2
Insulation resistance	=$10^9\Omega$
Degree of protection	IP67 in mated condition
Temperature range	-30°C to +70°C
Mating cycles	<=100

Directive 2002 95 EC „RoHS" Compliant

Pin configuration

4-pos

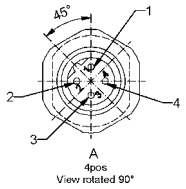

Contact assignment 4-pos

brown	1
Profibus A green	2
blue	3
Profibus A red	4

Dimension drawing

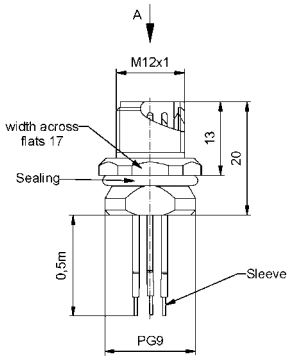

Cut-out front panel

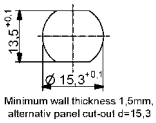

Order data

wire	Length/L	Description	4-pos Part-no.
PVC, UL AWG 22	0,5m	SAL-12B-FS4.3-0,5-9	43-01110
Accessories Please order separately		Counter nut	43-01156

SAL M12x1 Connectors - B-coding Profibus DP

Female socket dip-solder, backmounting, M16x1,5-thread

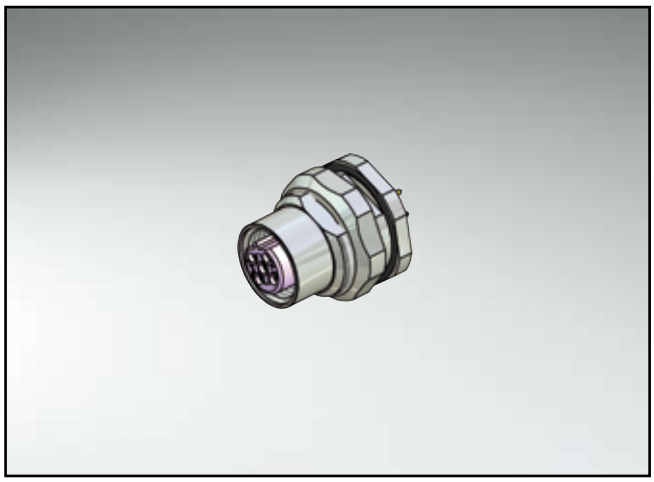

Technical Data

Rated voltage	4-pos / 250V
Current rating	4A at +40°C
Pollution degree	3/2
Insulation resistance	=$10^9\Omega$
Degree of protection	IP67 in mated condition
Temperature range	-30°C to +85°C
Mating cycles	<=100

Directive 2002 95 EC „RoHS" Compliant

Pin configuration

4-pos

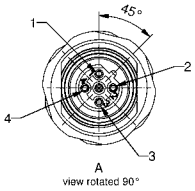

Cut-out front panel

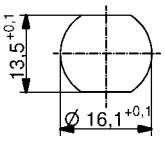

Minimum wall thickness 1,5mm, alternativ panel cut-out d=16,1

Dimension drawing

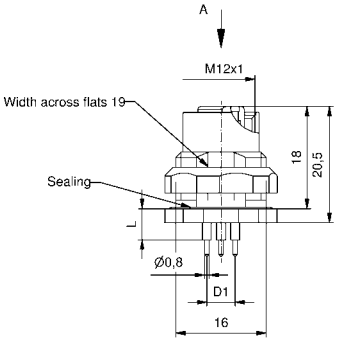

Order data

Length/L contacts	Description	4-pos Part-no.
5,5mm	SAL-12B-FKH4-P5,5	43-01123
12mm	SAL-12B-FKH4-P12	43-01124

SAL M12x1 Connectors - B-coding Profibus DP

Female socket dip-solder, backmounting, PG9-thread

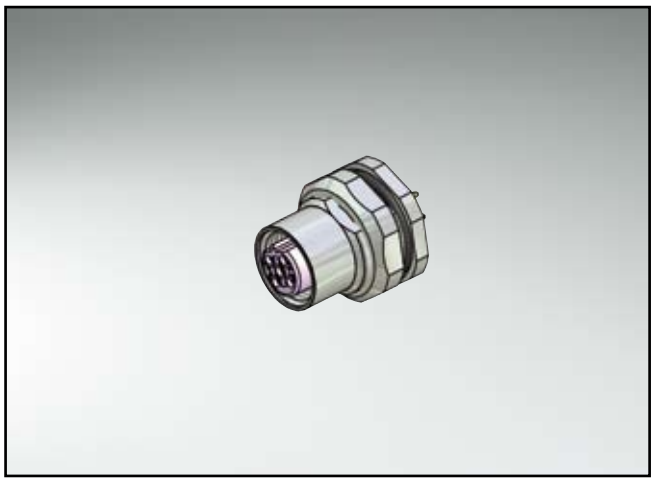

Technical Data

Rated voltage	4-pos / 250V
Current rating	4A at +40°C
Pollution degree	3/2
Insulation resistance	=$10^9\Omega$
Degree of protection	IP67 in mated condition
Temperature range	-30°C to +85°C
Mating cycles	<=100

Directive 2002 95 EC „RoHS" Compliant

Pin configuration

4-pos

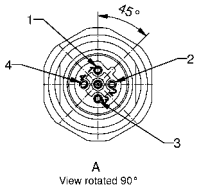

Cut-out front panel

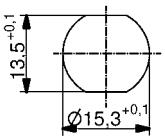

Minimum wall thickness 1,5mm, alternativ panel cut-out d=15,3

Dimension drawing

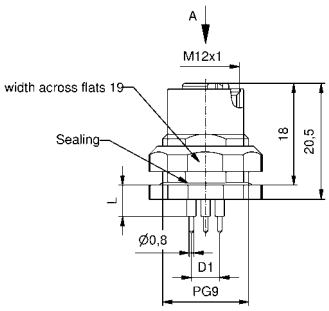

Order data

Length/L contacts	Description	4-pos Part-no.
5,5mm	SAL-12B-FKH4-P5,5-9	43-01249
12mm	SAL-12B-FKH4-P12-9	43-01250

SAL M12x1 Connectors - B-coding Profibus DP

Male socket dip-solder, backmounting, M16x1,5-thread

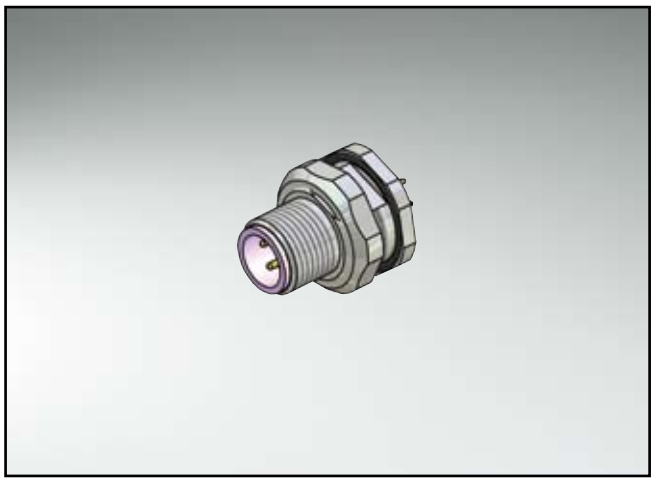

Technical Data

Rated voltage	4-pos / 250V
Current rating	4A at +40°C
Pollution degree	3/2
Insulation resistance	=$10^9\Omega$
Degree of protection	IP67 in mated condition
Temperature range	-30°C to +85°C
Mating cycles	<=100

Directive 2002 95 EC „RoHS" Compliant

Pin configuration

4-pos

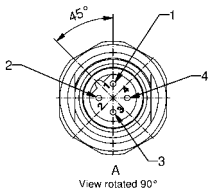

Cut-out front panel

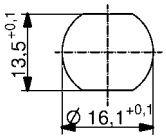

Minimum wall thickness 1,5mm, alternativ panel cut-out d=16,1

Dimension drawing

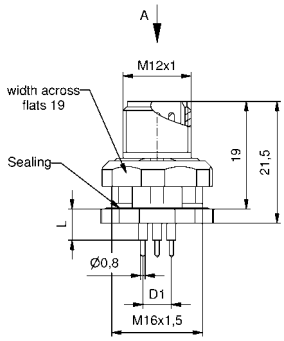

Order data

Length/L contacts	Description	4-pos Part-no.
5,5mm	SAL-12B-FSH4-P5,5	43-01125
12mm	SAL-12B-FSH4-P12	43-01126

SAL M12x1 Connectors - B-coding Profibus DP

Male socket dip-solder, backmounting, PG9-thread

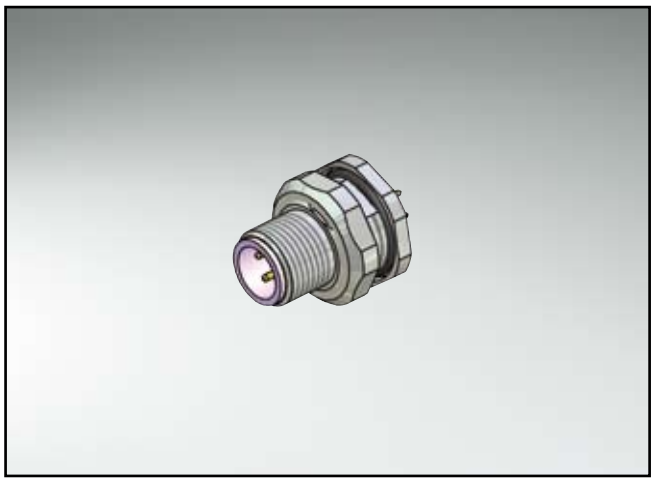

Technical Data

Rated voltage	4-pos / 250V
Current rating	4A at +40°C
Pollution degree	3/2
Insulation resistance	=$10^9\Omega$
Degree of protection	IP67 in mated condition
Temperature range	-30°C to +85°C
Mating cycles	<=100

Directive 2002 95 EC „RoHS" Compliant

Pin configuration

4-pos

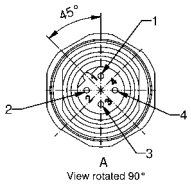

Cut-out front panel

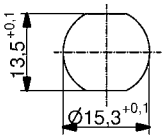

Minimum wall thickness 1,5mm, alternativ panel cut-out d=15,3

Dimension drawing

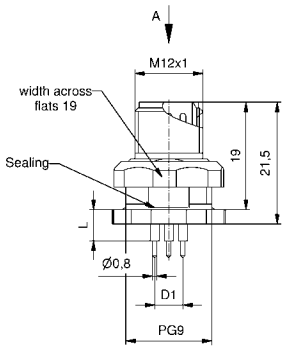

Order data

Length/L contacts	Description	4-pos Part-no.
5,5mm	SAL-12B-FSH4-P5,5-9	43-01251
12mm	SAL-12B-FSH4-P12-9	43-01252

SAL M12x1 Connectors - B-coding Profibus DP

Female socket dip-solder, frontmounting, axial, with shroud, installation height 5,5mm

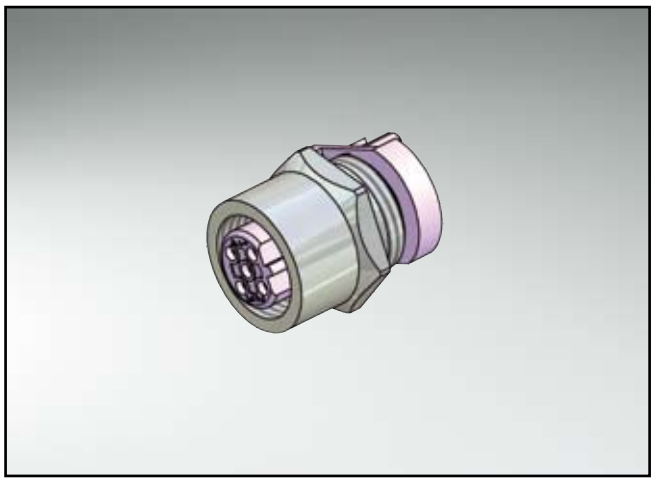

Technical Data

Rated voltage	4-pos / 250V
Current rating	4A at +40°C
Pollution degree	3/2
Insulation resistance	=$10^9\Omega$
Degree of protection	IP67 in mated condition
Temperature range	-30°C to +85°C
Mating cycles	<=100

Directive 2002 95 EC „RoHS" Compliant

Pin configuration

4-pos

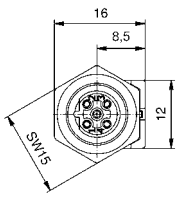

Hole pattern printing board

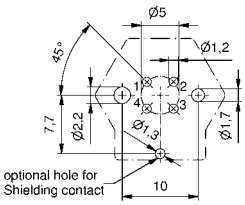

Dimension drawing

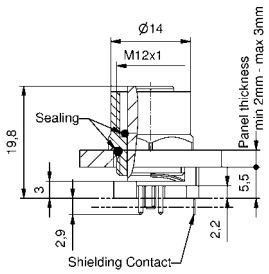

Screw-in thread

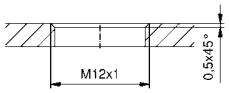

Order data

Length/L contacts	Description	4-pos Part-no.
5,5mm	SAL-12B-FK4-X5,5	43-01216

SAL M12x1 Connectors - B-coding Profibus DP

Female socket dip-solder, frontmounting, axial, with shroud, installation height 10mm

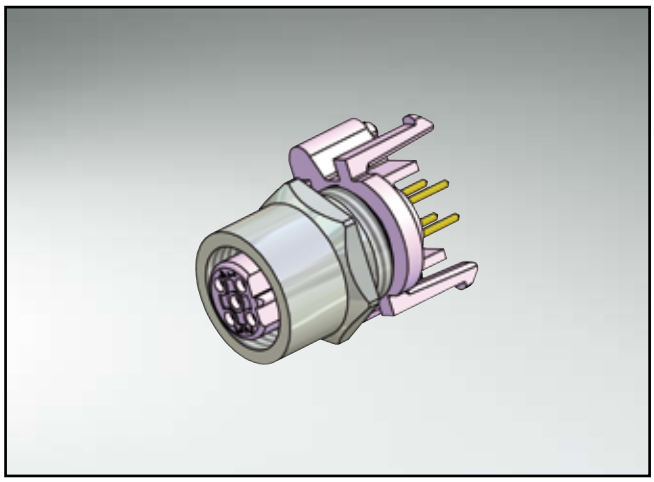

Technical Data

Rated voltage	4-pos / 250V
Current rating	4A at +40°C
Pollution degree	3/2
Insulation resistance	=$10^9\Omega$
Degree of protection	IP67 in mated condition
Temperature range	-30°C to +85°C
Mating cycles	<=100

Directive 2002 95 EC „RoHS" Compliant

Pin configuration

4-pos

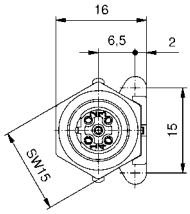

Hole pattern printing board

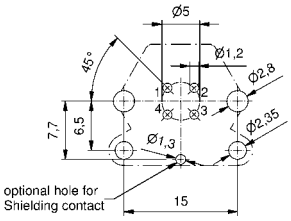

Dimension drawing

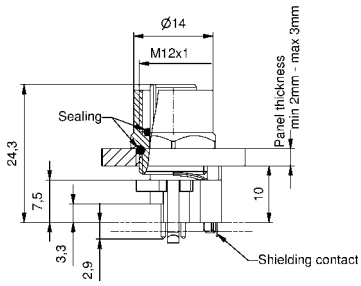

Screw-in thread

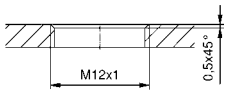

Order data

Length/L contacts	Description	4-pos Part-no.
10mm	SAL-12B-FK4-X10	43-01212

SAL M12x1 Connectors - B-coding Profibus DP

Male socket dip-solder, frontmounting, axial, with shroud, installation height 5,5mm

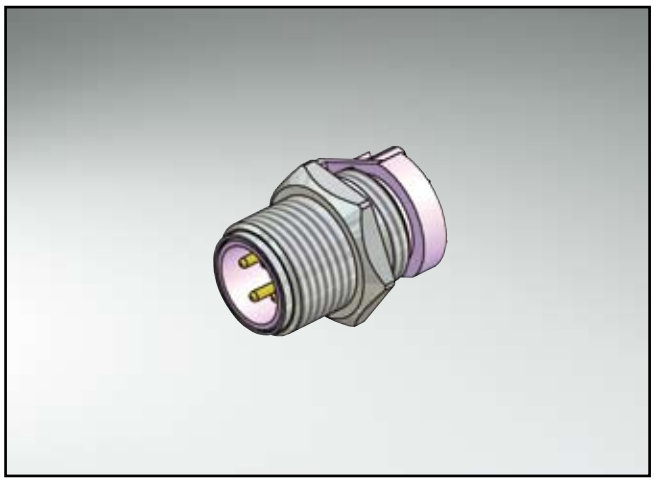

Technical Data

Rated voltage	4-pos / 250V
Current rating	4A at +40°C
Pollution degree	3/2
Insulation resistance	=$10^9\Omega$
Degree of protection	IP67 in mated condition
Temperature range	-30°C to +85°C
Mating cycles	<=100

Directive 2002 95 EC „RoHS" Compliant

Pin configuration

4-pos

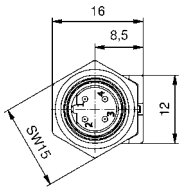

Hole pattern printing board

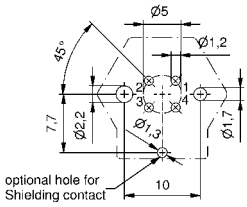

Dimension drawing

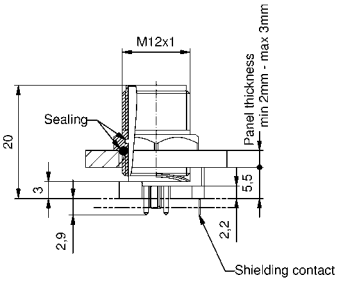

Screw-in thread

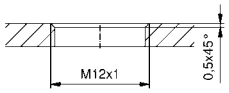

Order data

Length/L contacts	Description	4-pos Part-no.
5,5mm	SAL-12B-FS4-X5,5	43-01218

SAL M12x1 Connectors - B-coding Profibus DP

Male socket dip-solder, frontmounting, axial, with shroud, installation height 10mm

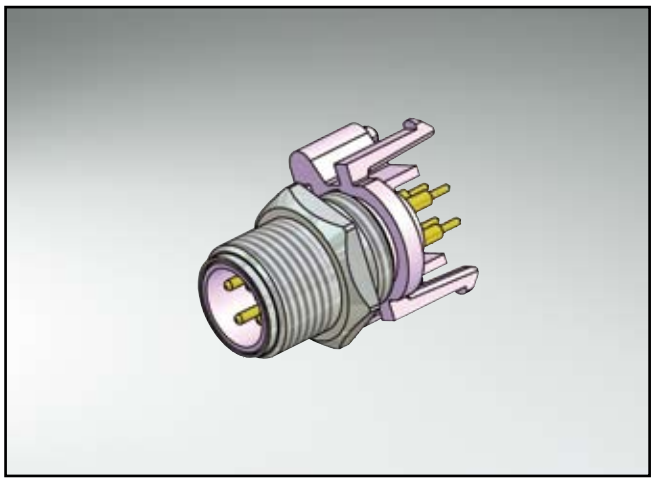

Technical Data

Rated voltage	4-pos / 250V
Current rating	4A at +40°C
Pollution degree	3/2
Insulation resistance	=$10^9\Omega$
Degree of protection	IP67 in mated condition
Temperature range	-30°C to +85°C
Mating cycles	<=100

Directive 2002 95 EC „RoHS" Compliant

Pin configuration

4-pos

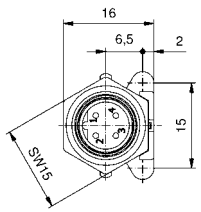

Hole pattern printing board

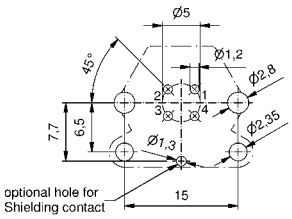

Dimension drawing

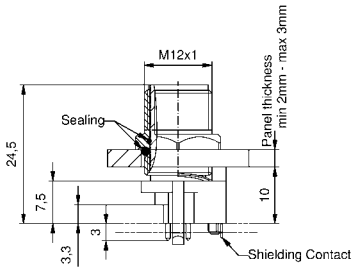

Screw-in thread

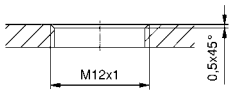

Order data

Length/L contacts	Description	4-pos Part-no.
10mm	SAL-12B-FS4-X10	43-01214

SAL M12x1 Connectors - B-coding Profibus DP

Female socket dip-solder, backmounting, axial, with shroud, installation height 5,5mm

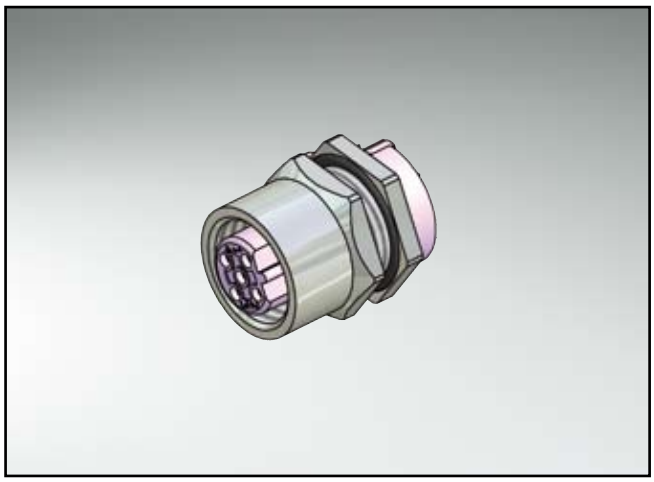

Technical Data

Rated voltage	4-pos / 250V
Current rating	4A at +40°C
Pollution degree	3/2
Insulation resistance	=$10^9\Omega$
Degree of protection	IP67 in mated condition
Temperature range	-30°C to +85°C
Mating cycles	<=100

Directive 2002 95 EC „RoHS" Compliant

Pin configuration

4-pos

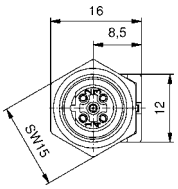

Hole pattern printing board

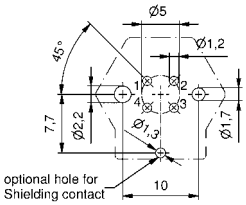

Dimension drawing

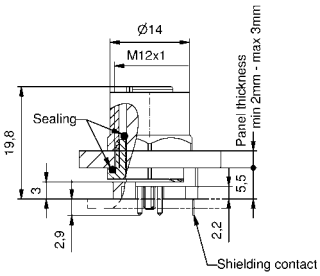

Feedthrough

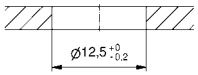

Order data

Length/L contacts	Description	4-pos Part-no.
5,5mm	SAL-12B-FKH4-X5,5	43-01217

SAL M12x1 Connectors - B-coding Profibus DP

Female socket dip-solder, backmounting, axial, with shroud, installation height 10mm

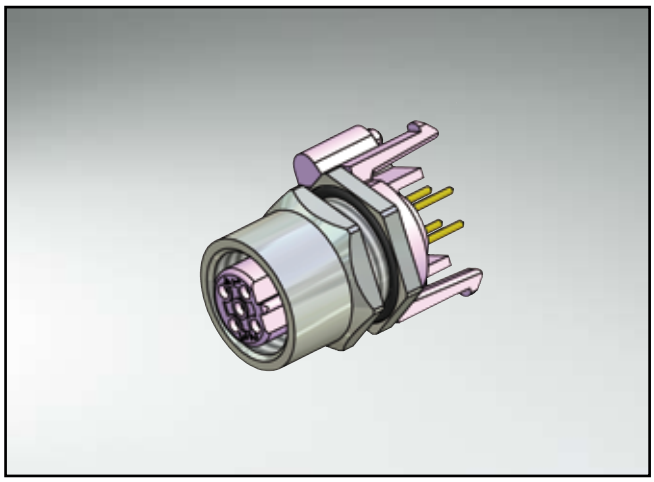

Technical Data

Rated voltage	4-pos / 250V
Current rating	4A at +40°C
Pollution degree	3/2
Insulation resistance	=$10^9\Omega$
Degree of protection	IP67 in mated condition
Temperature range	-30°C to +85°C
Mating cycles	<=100

Directive 2002 95 EC „RoHS" Compliant

Pin configuration

4-pos

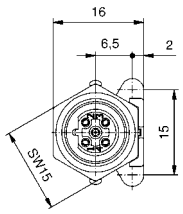

Hole pattern printing board

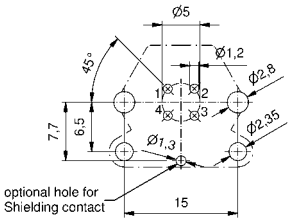

Dimension drawing

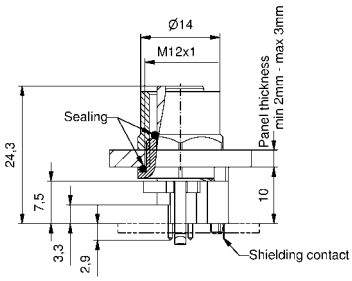

Feedthrough

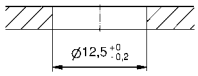

Order data

Length/L contacts	Description	4-pos Part-no.
10mm	SAL-12B-FKH4-X10	43-01213

SAL M12x1 Connectors - B-coding Profibus DP

Male socket dip-solder, backmounting, axial, with shroud, installation height 5,5mm

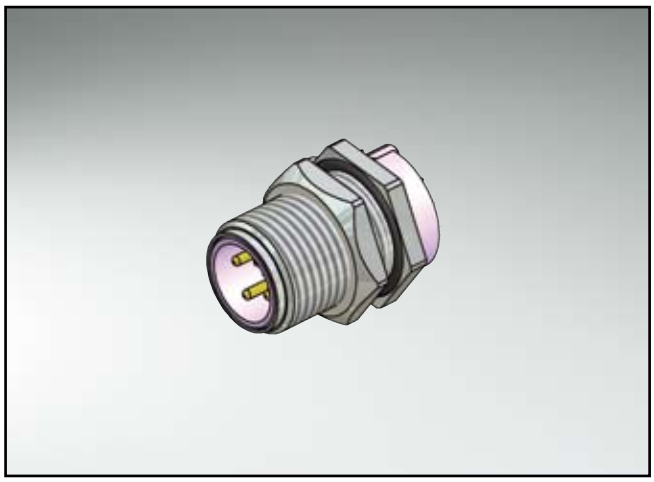

Technical Data

Rated voltage	4-pos / 250V
Current rating	4A at +40°C
Pollution degree	3/2
Insulation resistance	=$10^9\Omega$
Degree of protection	IP67 in mated condition
Temperature range	-30°C to +85°C
Mating cycles	<=100

Directive 2002 95 EC „RoHS" Compliant

Pin configuration

4-pos

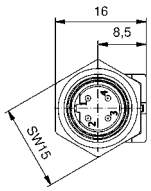

Hole pattern printing board

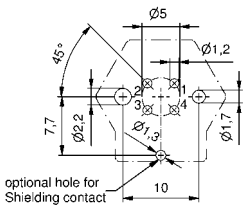

Dimension drawing

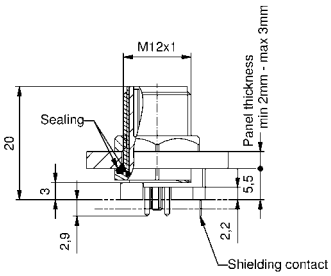

Feedthrough

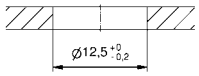

Order data

Length/L contacts	Description	4-pos Part-no.
5,5mm	SAL-12B-FSH4-X5,5	43-01219

SAL M12x1 Connectors - B-coding Profibus DP

Male socket dip-solder, backmounting, axial, with shroud, installation height 10mm

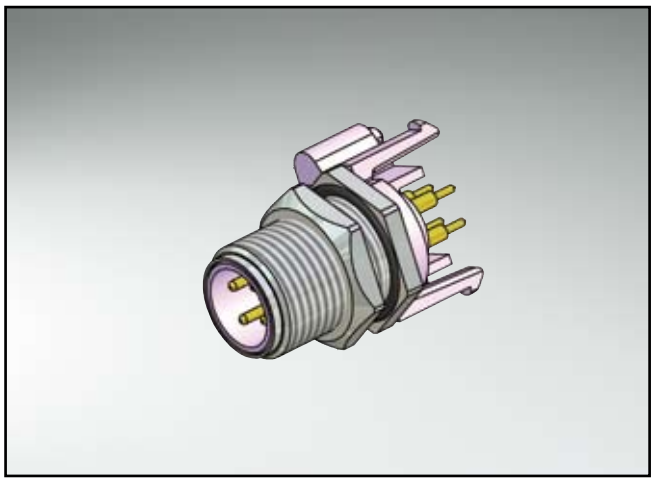

Technical Data

Rated voltage	4-pos / 250V
Current rating	4A at +40°C
Pollution degree	3/2
Insulation resistance	=$10^9\Omega$
Degree of protection	IP67 in mated condition
Temperature range	-30°C to +85°C
Mating cycles	<=100

Directive 2002 95 EC „RoHS" Compliant

Pin configuration

4-pos

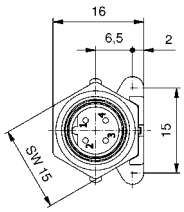

Hole pattern printing board

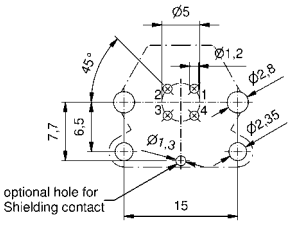

Dimension drawing

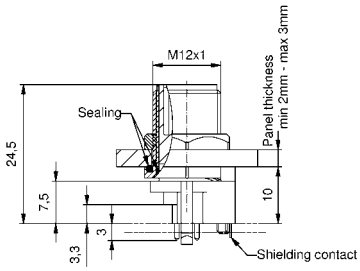

Feedthrough

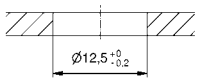

Order data

Length/L contacts	Description	4-pos Part-no.
10mm	SAL-12B-FSH4-X10	43-01215

SAL M12x1 Connectors - B-coding Profibus DP

Female socket dip-solder, frontmounting, angled, with shroud

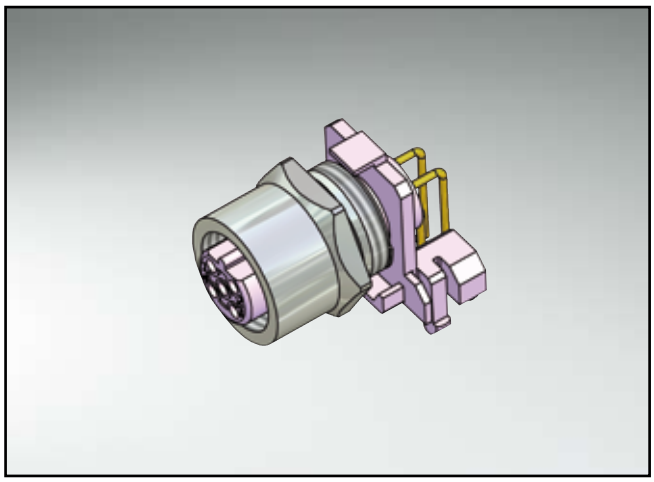

Technical Data

Rated voltage	4-pos / 250V
Current rating	4A at +40°C
Pollution degree	3/2
Insulation resistance	=$10^9\Omega$
Degree of protection	IP67 in mated condition
Temperature range	-30°C to +85°C
Mating cycles	<=100

Directive 2002 95 EC „RoHS" Compliant

Pin configuration

4-pos

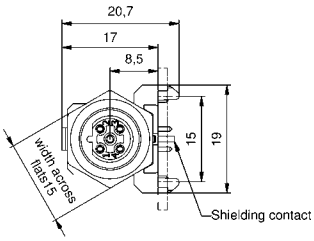

Hole pattern printing board

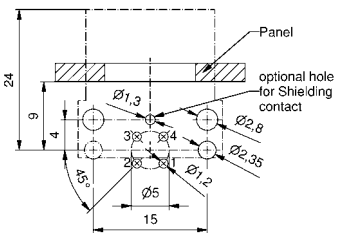

Dimension drawing

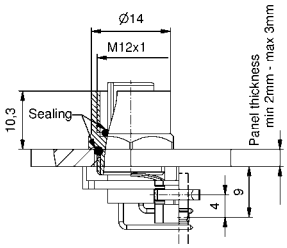

Screw-in thread

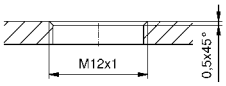

Order data

Description	4-pos Part-no.
SAL-12B-FKW4	43-01224

SAL M12x1 Connectors - B-coding Profibus DP

Male socket dip-solder, frontmounting, angled, with shroud

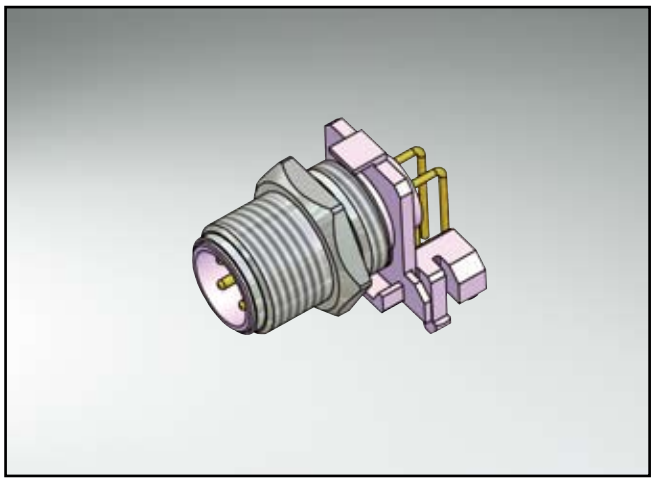

Technical Data

Rated voltage	4-pos 250V
Current rating	4A at +40°C
Pollution degree	3/2
Insulation resistance	=$10^9\Omega$
Degree of protection	IP67 in mated condition
Temperature range	-30°C to +85°C
Mating cycles	<=100

Directive 2002 95 EC
„RoHS"
Compliant

Pin configuration

4-pos

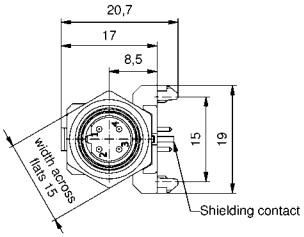

Hole pattern printing board

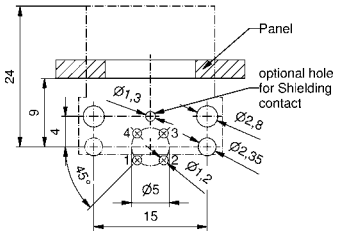

Dimension drawing

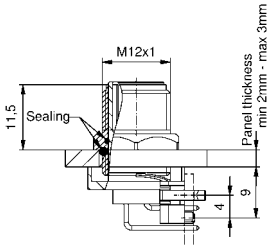

Screw-in thread

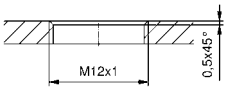

Order data

Description	4-pos Part-no.
SAL-12B-FSW4	43-01226

SAL M12x1 Connectors - B-coding Profibus DP

Female socket dip-solder, backmounting, angled, with shroud

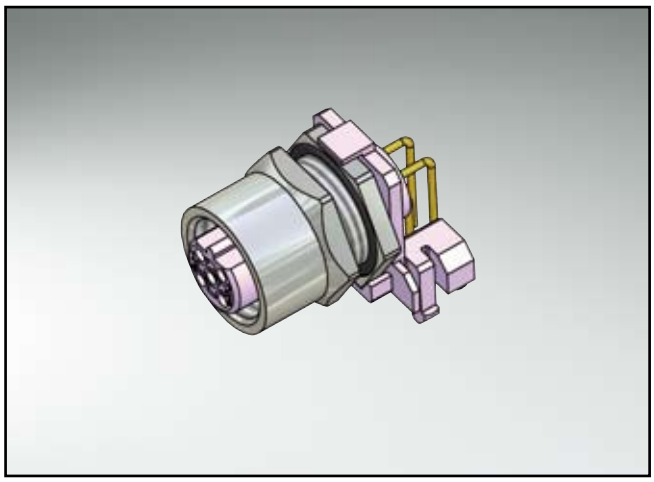

Technical Data

Rated voltage	4-pos / 250V
Current rating	4A at +40°C
Pollution degree	3/2
Insulation resistance	=$10^9\Omega$
Degree of protection	IP67 in mated condition
Temperature range	-30°C to +85°C
Mating cycles	<=100

Directive 2002 95 EC „RoHS" Compliant

Pin configuration

4-pos

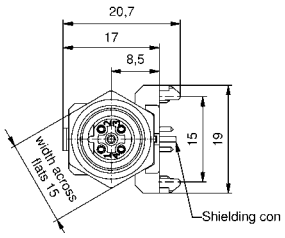

Hole pattern printing board

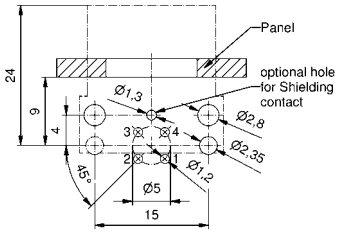

Dimension drawing

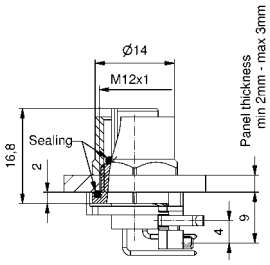

Feedthrough

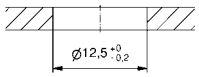

Order data

Description	4-pos Part-no.
SAL-12B-FKHW4	43-01225

SAL M12x1 Connectors - B-coding Profibus DP

Male socket dip-solder, backmounting, angled, with shroud

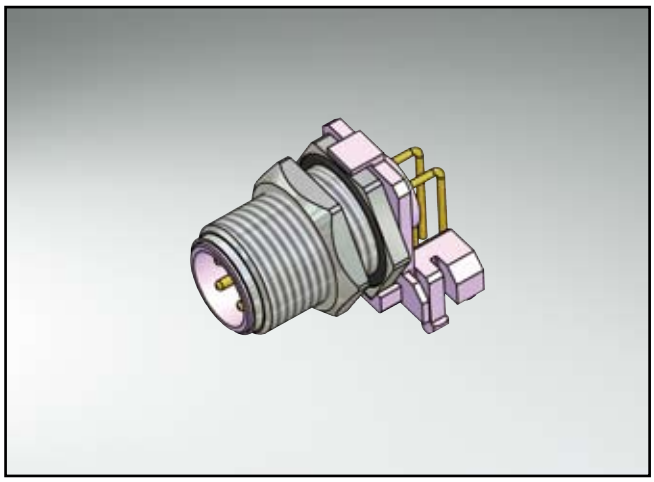

Technical Data

Rated voltage	4-pos / 250V
Current rating	4A at +40°C
Pollution degree	3/2
Insulation resistance	=$10^9\Omega$
Degree of protection	IP67 in mated condition
Temperature range	-30°C to +85°C
Mating cycles	<=100

Directive 2002 95 EC „RoHS" Compliant

Pin configuration

4-pos

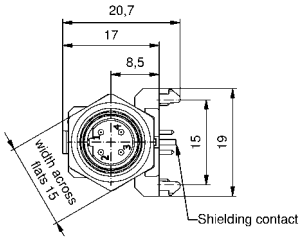

Hole pattern printing board

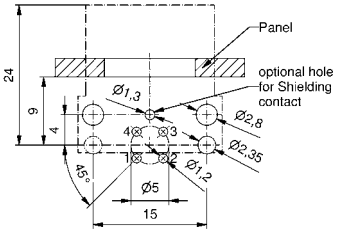

Dimension drawing

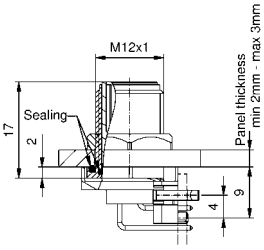

Feedthrough

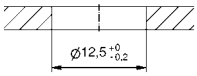

Order data

Description	4-pos Part-no.
SAL-12B-FSHW4	43-01227

SAL Connectors SUB-D auf M12x1

Connecting cable SUB-D Male connector, angled, 9-pos, with programming interface – Male connector/Female connector M12x1, axial, B-coding, 4-pos

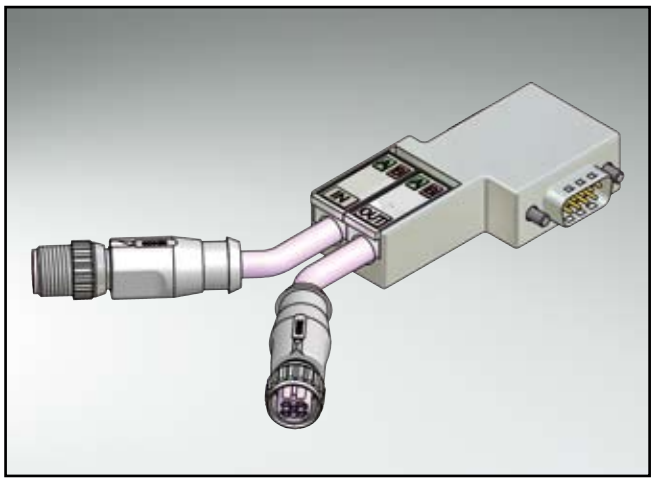

Technical Data

Housing SUB-D	Thermoplastic chrome-plated
Rated voltage	4,75 - 5,25 V DC
Degree of protection	IP40 at SUB-D IP67 at M12x1
Temperature range	-25°C to +60°C
Mating cycles	<=100
SUB-D Male connector	with switchable ferrule resistor

Directive 2002 95 EC „RoHS" Compliant

Contact assignment

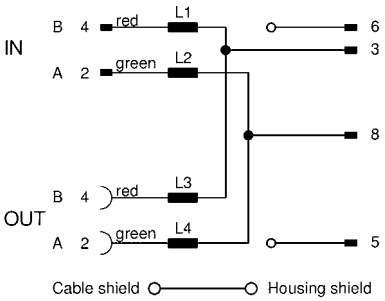

Dimension drawing

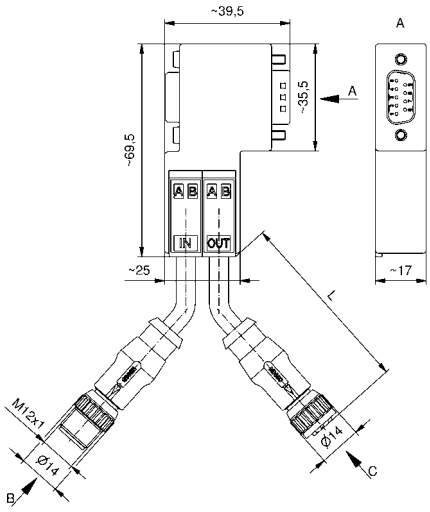

Order data

Cable	Length/L	Description	Part-no.
PVC, UL violet (RAL 4001) 2xAWG 22	0,5m	SAL-SD-SKSW9.1-12B-RS4.1-RK4.1-0,5/G5	43-11756
	1,0m	SAL-SD-SKSW9.1-12B-RS4.1-RK4.1-1/G5	43-11757
	2,0m	SAL-SD-SKSW9.1-12B-RS4.1-RK4.1-2/G5	43-11758
TPU, UL violet (RAL 4001) 2xAWG 22	0,5m	SAL-SD-SKSW9.1-12B-RS4.1-RK4.1-0,5/G4	43-11753
	1,0m	SAL-SD-SKSW9.1-12B-RS4.1-RK4.1-1/G4	43-11754
	2,0m	SAL-SD-SKSW9.1-12B-RS4.1-RK4.1-2/G4	43-11755
TPU, UL high flexible, halogenfree, violet (RAL 4001) 2xAWG 24	0,5m	SAL-SD-SKSW9.1-12B-RS4.1-RK4.1-0,5/G7	43-11759
	1,0m	SAL-SD-SKSW9.1-12B-RS4.1-RK4.1-1/G7	43-11760
	2,0m	SAL-SD-SKSW9.1-12B-RS4.1-RK4.1-2/G7	43-11761

For custom length or quality levels contact factory.

SAL Connectors SUB-D auf M12x1

Connecting cable SUB-D Male connector angled, 9-pos, with programming interface – Male connector M12x1, axial, B-coding, 4-pos

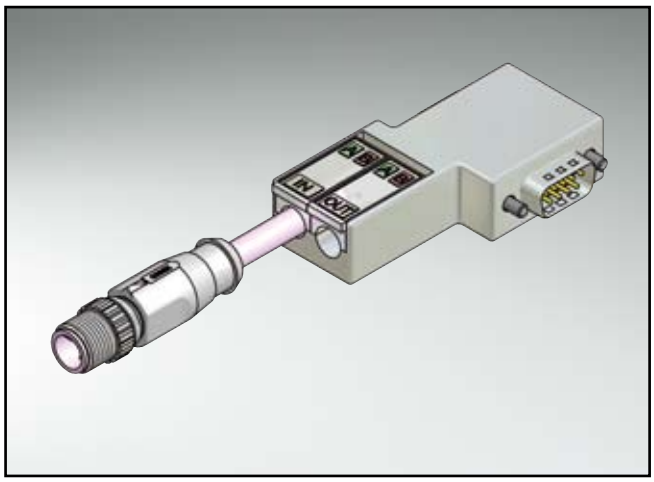

Technical Data

Housing SUB-D	Thermoplastic chrome-plated
Rated voltage	4,75 - 5,25 V DC
Degree of protection	IP40 at SUB-D IP67 at M12x1
Temperature range	-25°C to +60°C
Mating cycles	<=100
SUB-D Male connector	with switchable ferrule resistor

Directive 2002 95 EC „RoHS" Compliant

Contact assignment

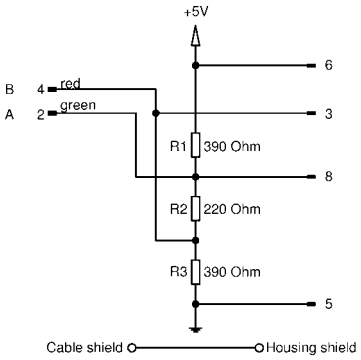

Dimension drawing

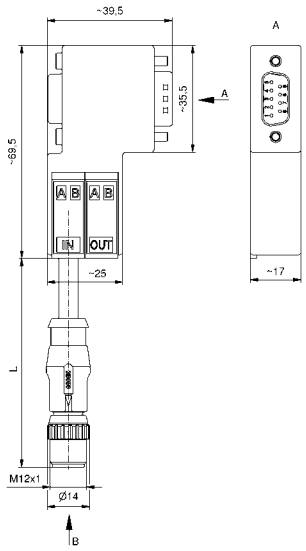

Order data

Cable	Length/L	Description	Part-no.
PVC, UL violet (RAL 4001) 2xAWG 22	2 m	SAL-SD-SKSW9-12B-RS4.1-2/G5	43-11747
	3 m	SAL-SD-SKSW9-12B-RS4.1-3/G5	43-11748
	5 m	SAL-SD-SKSW9-12B-RS4.1-5/G5	43-11749
TPU, UL violet (RAL 4001) 2xAWG 22	2 m	SAL-SD-SKSW9-12B-RS4.1-2/G4	43-11744
	3 m	SAL-SD-SKSW9-12B-RS4.1-3/G4	43-11745
	5 m	SAL-SD-SKSW9-12B-RS4.1-5/G4	43-11746
TPU, UL high flexible, halogenfree, violet (RAL 4001) 2xAWG 24	2 m	SAL-SD-SKSW9-12B-RS4.1-2/G7	43-11750
	3 m	SAL-SD-SKSW9-12B-RS4.1-3/G7	43-11751
	5 m	SAL-SD-SKSW9-12B-RS4.1-5/G7	43-11752

For custom length or quality levels contact factory.

SAL Connectors SUB-D auf M12x1

Connecting cable SUB-D Male connector, angled, 9-pos, with programming interface – Female connector M12x1, axial, B-coding, 4-pos

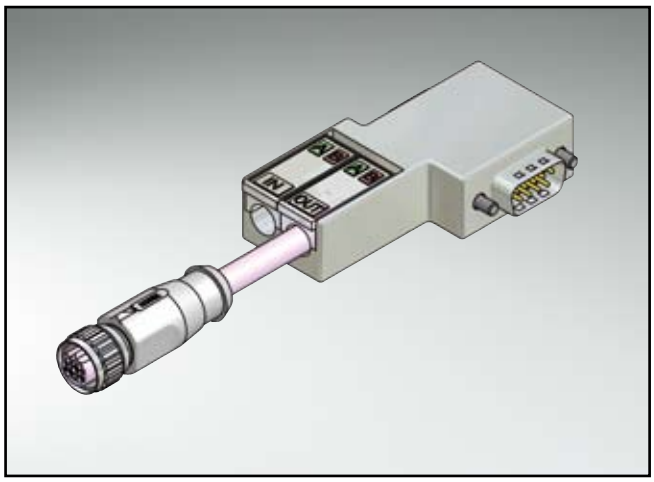

Technical Data

Housing SUB-D	Thermoplastic chrome-plated
Rated voltage	4,75 - 5,25 V DC
Degree of protection	IP40 at SUB-D IP67 at M12x1
Temperature range	-25°C to +60°C
Mating cycles	<=100
SUB-D Male connector	with switchable ferrule resistor

Directive 2002 95 EC „RoHS" Compliant

Contact assignment

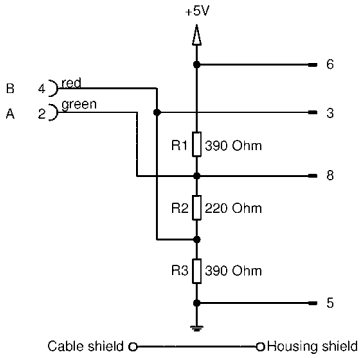

Dimension drawing

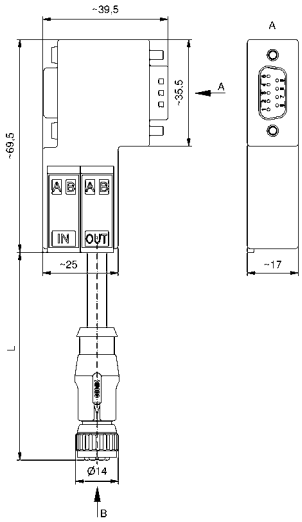

Order data

Cable	Length/L	Description	Part-no.
PVC, UL violet (RAL 4001) 2xAWG 22	2 m	SAL-SD-SKSW9-12B-RK4.1-2/G5	43-11738
	3 m	SAL-SD-SKSW9-12B-RK4.1-3/G5	43-11739
	5 m	SAL-SD-SKSW9-12B-RK4.1-5/G5	43-11740
TPU, UL violet (RAL 4001) 2xAWG 22	2 m	SAL-SD-SKSW9-12B-RK4.1-2/G4	43-11735
	3 m	SAL-SD-SKSW9-12B-RK4.1-3/G4	43-11736
	5 m	SAL-SD-SKSW9-12B-RK4.1-5/G4	43-11737
TPU, UL high flexible, halogenfree, violet (RAL 4001) 2xAWG 24	2 m	SAL-SD-SKSW9-12B-RK4.1-2/G7	43-11741
	3 m	SAL-SD-SKSW9-12B-RK4.1-3/G7	43-11742
	5 m	SAL-SD-SKSW9-12B-RK4.1-5/G7	43-11743

For custom length or quality levels contact factory.

SAL Connectors SUB-D

SUB-D Male connector, 9-pos, angled, with programming interface and quick connection for flexible conductor

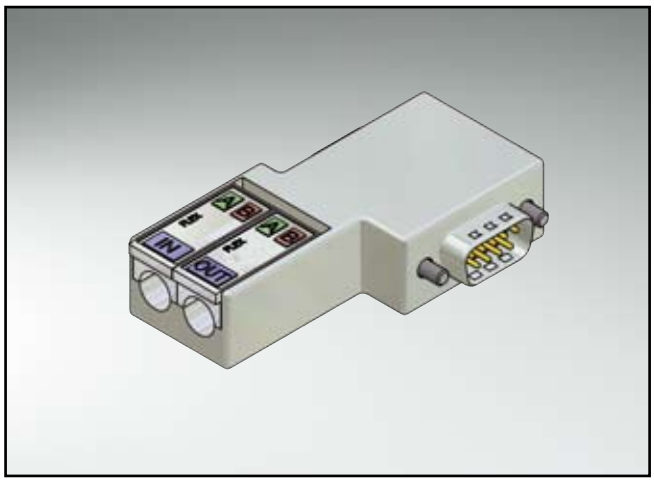

Technical Data

Housing SUB-D	Thermoplastic chrome-plated
Rated voltage	4,75 - 5,25 V DC
Current rating	12,5 mA
Degree of protection	IP40
Temperature range	-25°C to +60°C
Mating cycles	<=100
SUB-D	with switchable ferrule resistor

Directive 2002 95 EC
„RoHS"
Compliant

Contact assignment

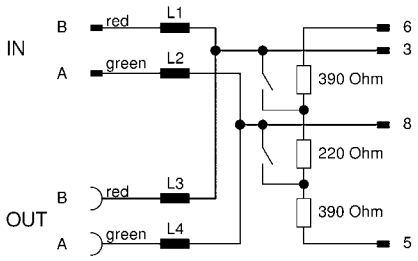

Dimension drawing

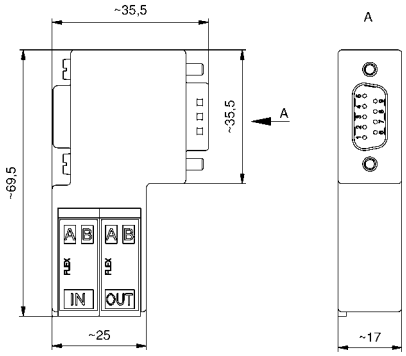

Order data

Description	Part-no.
SAL-SD-SKSW9F	43-11311

SAL Connectors SUB-D

SUB-D Male connector, 9-pos, angled, with programming interface and quick connection for inflexible conductor

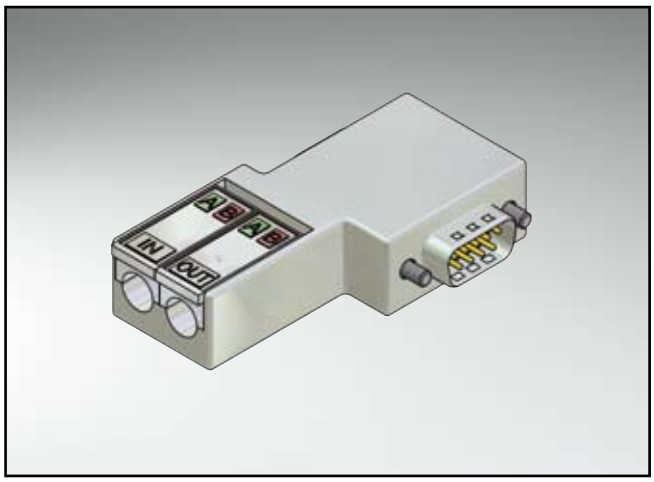

Technical Data

Housing SUB-D	Thermoplastic chrome-plated
Rated voltage	4,75 - 5,25 v DC
Current rating	12,5 mA
Degree of protection	IP40
Temperature range	-25°C to +60°C
Mating cycles	<=100
SUB-D	with switchable ferrule resistor

Directive 2002 95 EC
„RoHS"
Compliant

Contact assignment

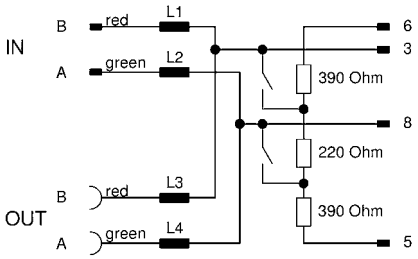

Dimension drawing

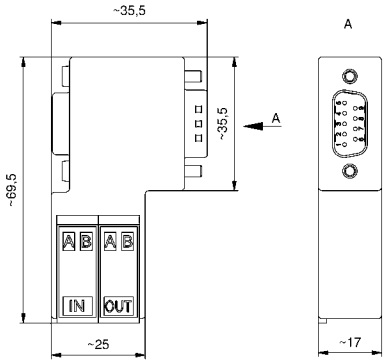

Order data

Description	Part-no.
SAL-SD-SKSW9	43-11520

SAL M12x1 Connectors SUB-D

SUB-D Male connector, 9-pos, axial, with screw termination

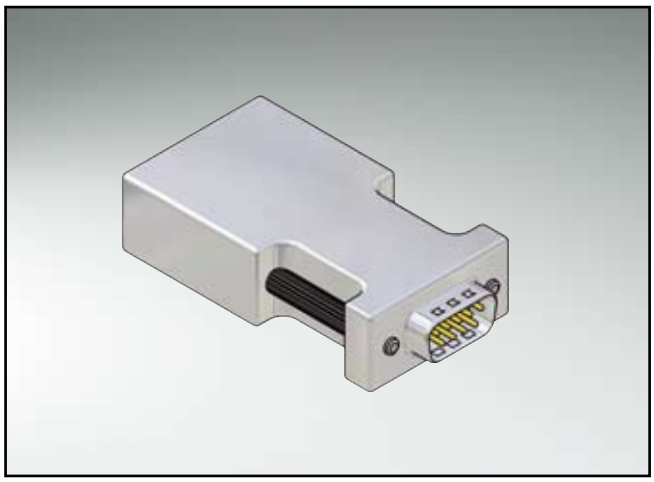

Technical Data

Housing SUB-D	Thermoplastic chrome-plated
Rated voltage	4,75 - 5,25 v DC
Current rating	12,5 mA
Degree of protection	IP40
Temperature range	-25°C to +60°C
Mating cycles	<=100
SUB-D	with switchable ferrule resistor

Directive 2002 95 EC „RoHS" Compliant

Contact assignment

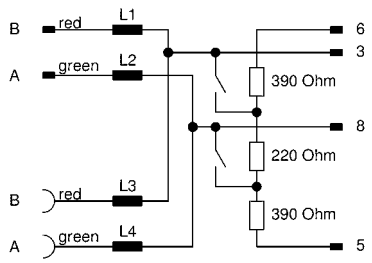

Dimension drawing

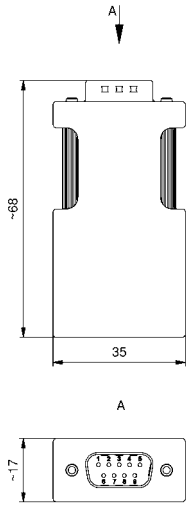

Order data

Description	Part-no.
SAL-SD-SS9S	43-11929

SAL M12x1 Connectors - D-Coding Industrial Ethernet 100MHz

Male connector, axial with 360°-shielding

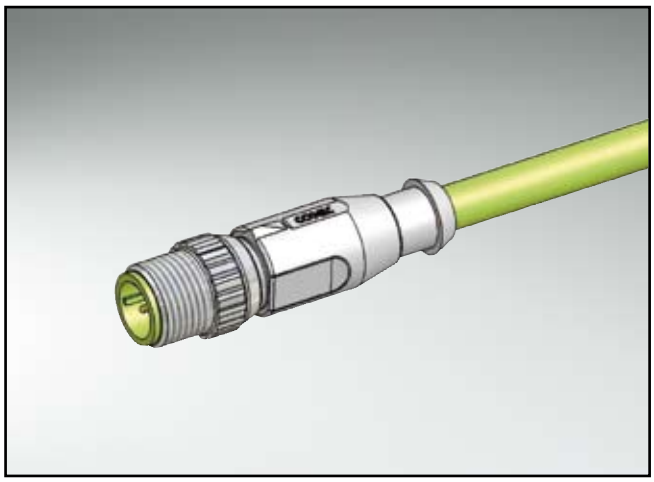

Technical Data

Rated voltage	4-pos / 160V
Current rating	4A at +40°C
Pollution degree	3/2
Insulation resistance	=$10^9\Omega$
Degree of protection	IP67 in mated condition
Temperature range	-30°C to +70°C
Mating cycles	<=100

Directive 2002 95 EC „RoHS" Compliant

Pin configuration

4-pos

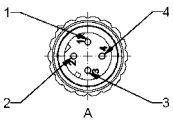

Contact assignment 4-pos

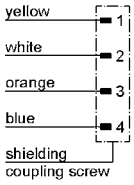

Dimension drawing

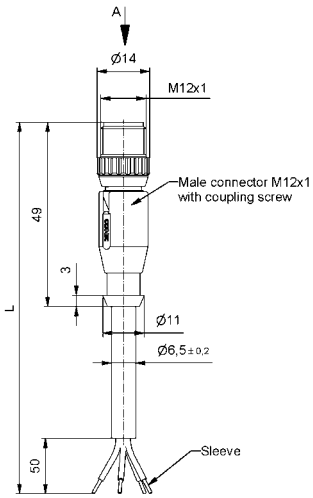

Order data

Cable	Length/L	Description	4-pos Part-no.
TPU, UL green (RAL 6018), 4xAWG 22	2m	SAL-12D-RS4.2-2/G6	43-10944
	3m	SAL-12D-RS4.2-3/G6	43-10945
	5m	SAL-12D-RS4.2-5/G6	43-10946
	10m	SAL-12D-RS4.2-10/G6	43-10947

For custom length or quality levels contact factory.

SAL M12x1 Connectors - D-Coding Industrial Ethernet 100MHz

Connecting cable with 360°-shielding

Male connector, axial – Male connector, axial

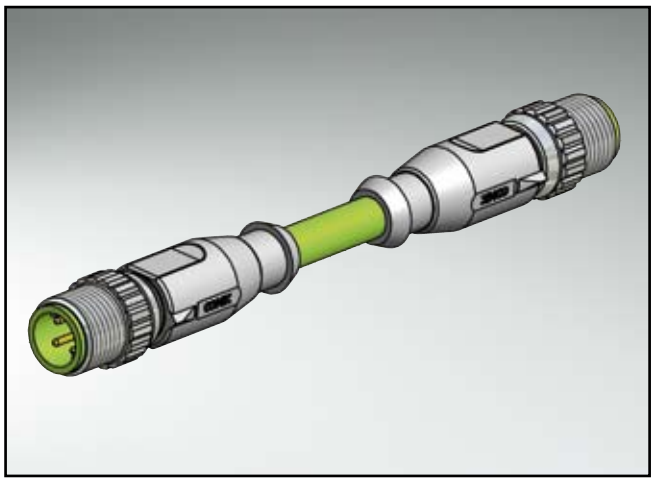

Technical Data

Rated voltage	4-pos / 160V
Current rating	4A at +40°C
Pollution degree	3/2
Insulation resistance	=$10^9\Omega$
Degree of protection	IP67 in mated condition
Temperature range	-30°C to +70°C
Mating cycles	<=100

Directive 2002 95 EC „RoHS" Compliant

Pin configuration

4-pos male

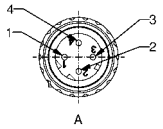

4-pos male

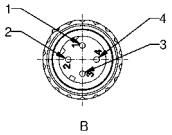

Contact assignment 4-pos

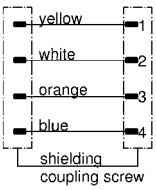

Dimension drawing

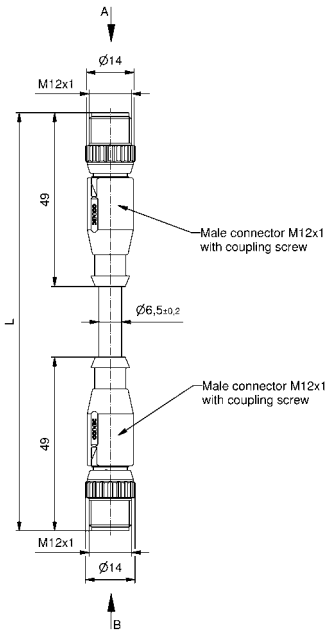

Order data

Cable	Length/L	Description	4-pos Part-no.
TPU, UL green (RAL 6018), 4xAWG 22	0,3m	SAL-12D-RS4.2-RS4.2-0,3/G6	43-10948
	0,6m	SAL-12D-RS4.2-RS4.2-0,6/G6	43-10949
	1,5m	SAL-12D-RS4.2-RS4.2-1,5/G6	43-10950
	3,0m	SAL-12D-RS4.2-RS4.2-3/G6	43-10951

For custom length or quality levels contact factory.

SAL M12x1 Connectors - D-Coding Industrial Ethernet 100MHz

Female socket with wire, frontmounting, M16x1,5-thread

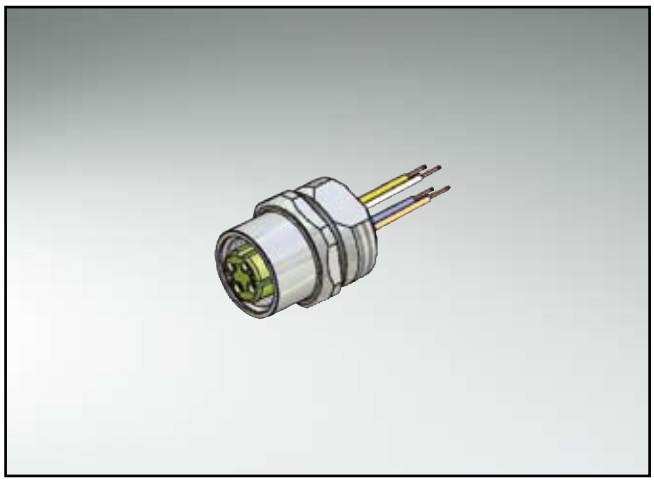

Technical Data

Rated voltage	4-pos / 250V
Current rating	4A at +40°C
Pollution degree	3/2
Insulation resistance	=$10^9\Omega$
Degree of protection	IP67 in mated condition
Temperature range	-30°C to +70°C
Mating cycles	<=100

Directive 2002 95 EC „RoHS" Compliant

Pin configuration

4-pos

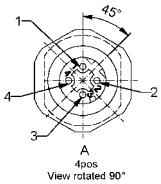

Contact assignment 4-pos

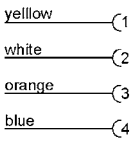

Dimension drawing

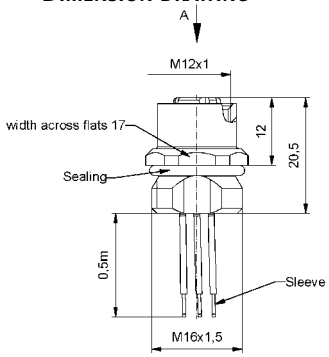

Cut-out front panel

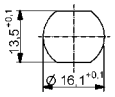

Minimum wall thickness 1,5mm, alternativ panel cut-out d=16,1

Order data

Cable	Length/L	Description	4-pos Part-no.
PVC, UL AWG 22	0,5m	SAL-12D-FK4.2-0,5	43-01044
Accessories Please order separately		Counter nut	43-01155

SAL M12x1 Connectors - D-Coding Industrial Ethernet 100MHz

Female socket with wire, frontmounting, PG9-thread

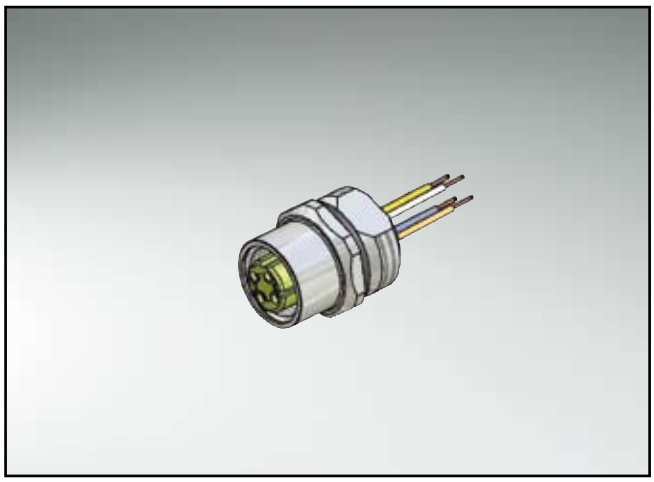

Technical Data

Rated voltage	4-pos / 250V
Current rating	4A at +40°C
Pollution degree	3/2
Insulation resistance	=$10^9\Omega$
Degree of protection	IP67 in mated condition
Temperature range	-30°C to +70°C
Mating cycles	<=100

Directive 2002 95 EC „RoHS" Compliant

Pin configuration

4-pos

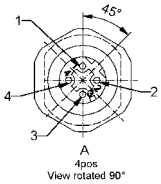

Contact assignment 4-pos

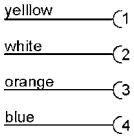

Dimension drawing

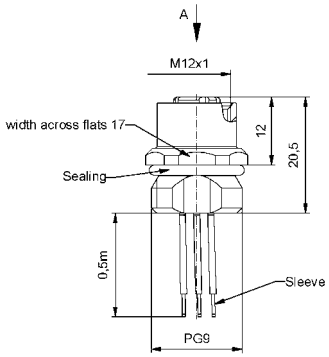

Cut-out front panel

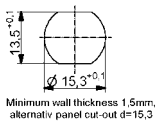

Order data

Cable	Length/L	Description	4-pos Part-no.
PVC, UL AWG 22	0,5m	SAL-12D-FK4.2-0,5-9	43-01111
Accessories Please order separately		Counter nut	43-01156

SAL M12x1 Connectors - D-Coding Industrial Ethernet 100MHz

Female socket dip-solder, backmounting, M16x1,5-thread

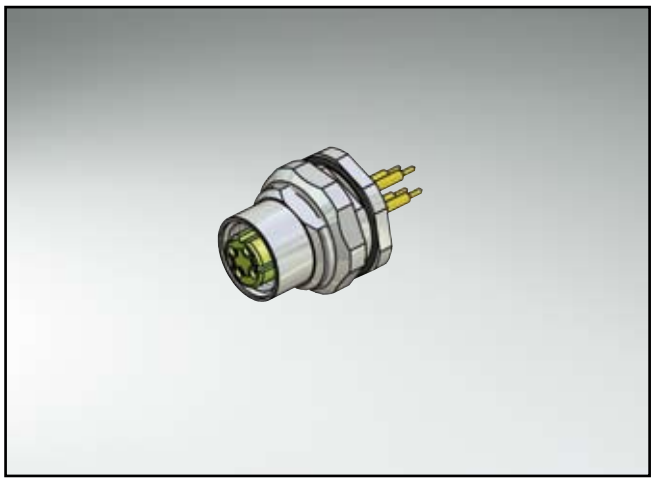

Technical Data

Rated voltage	4-pos / 250V
Current rating	4A at +40°C
Pollution degree	3/2
Insulation resistance	=$10^9\Omega$
Degree of protection	IP67 in mated condition
Temperature range	-30°C to +85°C
Mating cycles	<=100

Directive 2002 95 EC „RoHS" Compliant

Pin configuration

4-pos

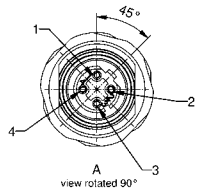

Cut-out front panel

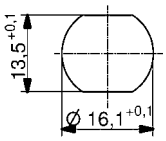

Minimum wall thickness 1,5mm, alternativ panel cut-out d=16,1

Dimension drawing

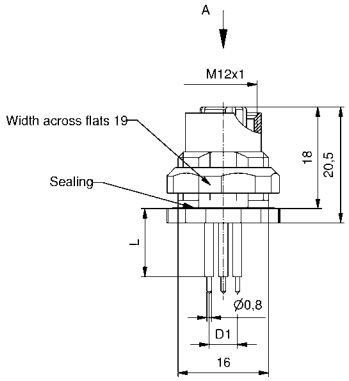

Order data

Length/L contacts	Description	4-pos Part-no.
5,5mm	SAL-12D-FKH4.2-P5,5	43-01157
12mm	SAL-12D-FKH4.2-P12	43-01118

SAL M12x1 Connectors - D-Coding Industrial Ethernet 100MHz

Female socket dip-solder, backmounting, PG9-thread

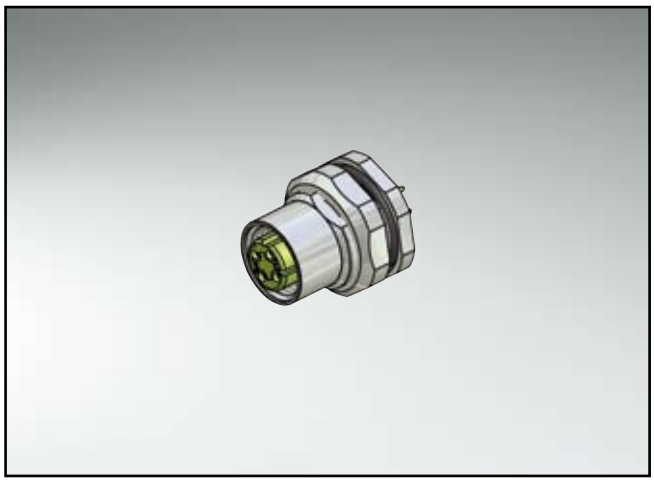

Technical Data

Rated voltage	4-pos / 250V
Current rating	4A at +40°C
Pollution degree	3/2
Insulation resistance	=$10^9\Omega$
Degree of protection	IP67 in mated condition
Temperature range	-30°C to +85°C
Mating cycles	<=100

Directive 2002 95 EC „RoHS" Compliant

Pin configuration

4-pos

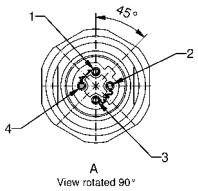

Cut-out front panel

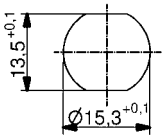

Minimum wall thickness 1,5mm, alternativ panel cut-out d=15,3

Dimension drawing

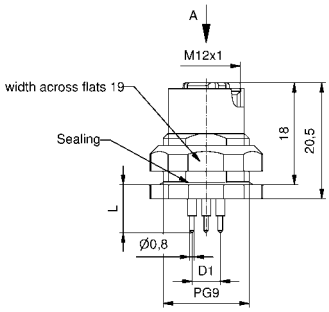

Order data

Length/L contacts	Description	4-pos Part-no.
5,5mm	SAL-12D-FKH4.2-P5,5-9	43-01236
12mm	SAL-12D-FKH4.2-P12-9	43-01248

SAL M12x1 Connectors - D-Coding Industrial Ethernet 100MHz

Female socket frontmounting, axial, with shroud, installation height 5,5mm

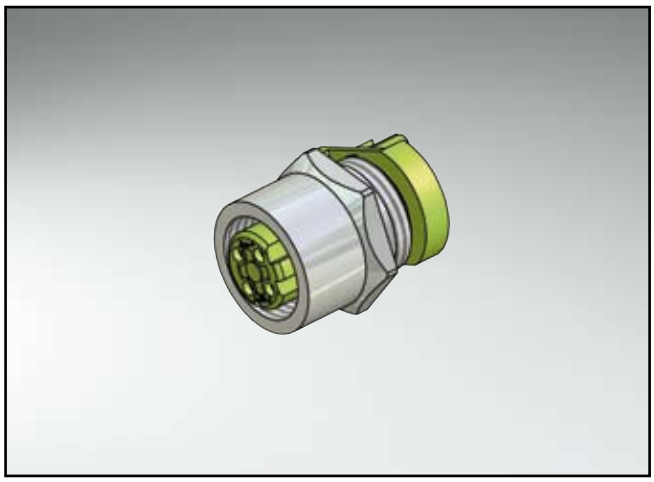

Technical Data

Rated voltage	4-pos / 250V
Current rating	4A at +40°C
Pollution degree	3/2
Insulation resistance	=$10^9\Omega$
Degree of protection	IP67 in mated condition
Temperature range	-30°C to +85°C
Mating cycles	<=100

Directive 2002 95 EC „RoHS" Compliant

Pin configuration

4-pos

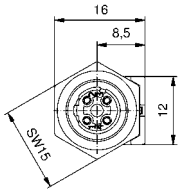

Hole pattern printing board

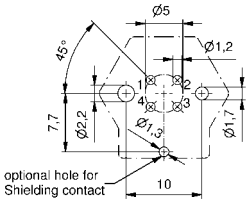

Dimension drawing

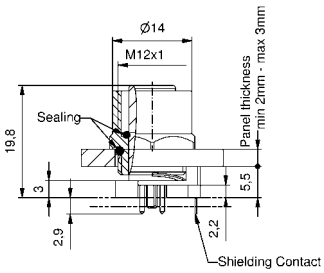

Screw-in thread

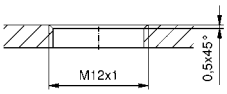

Order data

Length/L contacts	Description	4-pos Part-no.
5,5mm	SAL-12D-FK4-X5,5	43-01222

SAL M12x1 Connectors - D-Coding Industrial Ethernet 100MHz

Female socket frontmounting, axial, with shroud, installation height 10mm

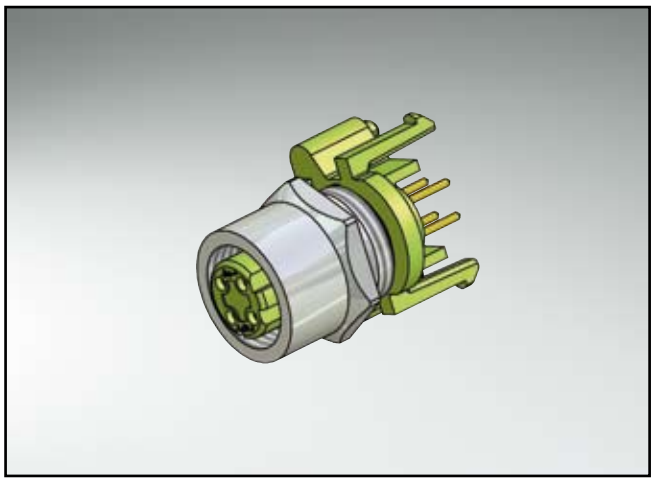

Technical Data

Rated voltage	4-pos / 250V
Current rating	4A at +40°C
Pollution degree	3/2
Insulation resistance	=$10^9\Omega$
Degree of protection	IP67 in mated condition
Temperature range	-30°C to +85°C
Mating cycles	<=100

Directive 2002 95 EC „RoHS" Compliant

Pin configuration

4-pos

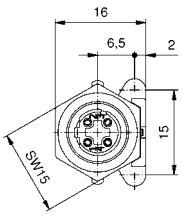

Hole pattern printing board

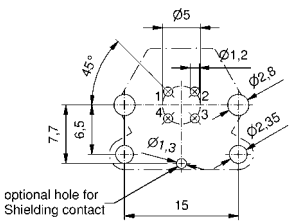

Dimension drawing

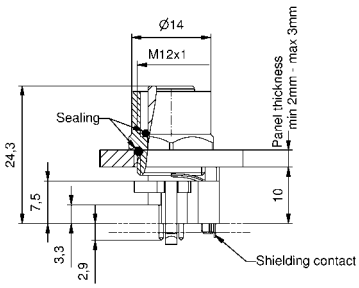

Screw-in thread

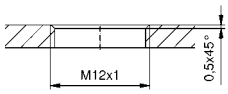

Order data

Length/L contacts	Description	4-pos Part-no.
10mm	SAL-12D-FK4-X10	43-01220

SAL M12x1 Connectors - D-Coding Industrial Ethernet 100MHz

Female socket frontmounting, angled, with shroud

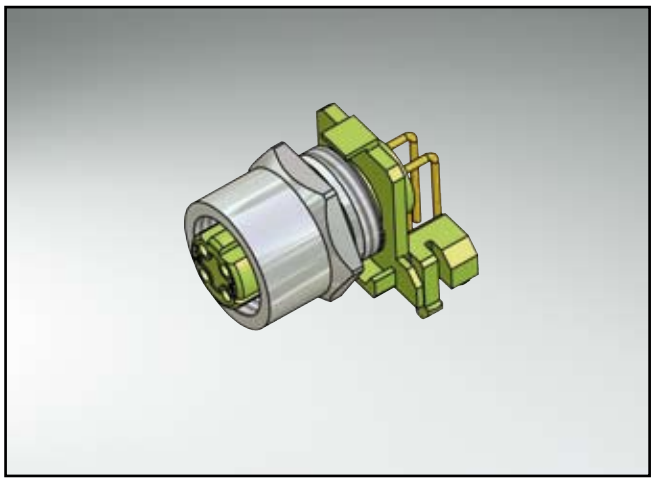

Technical Data

Rated voltage	4-pos / 250V
Current rating	4A at +40°C
Pollution degree	3/2
Insulation resistance	=$10^9\Omega$
Degree of protection	IP67 in mated condition
Temperature range	-30°C to +85°C
Mating cycles	<=100

Directive 2002 95 EC „RoHS" Compliant

Pin configuration

4-pos

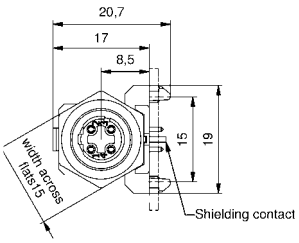

Hole pattern printing board

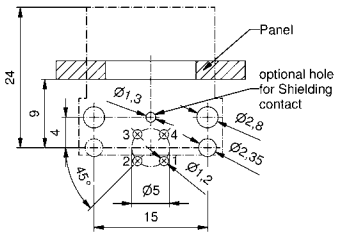

Dimension drawing

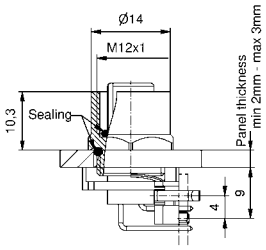

Screw-in thread

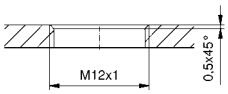

Order data

Description	4-pos Part-no.
SAL-12D-FKW4	43-01228

SAL M12x1 Connectors - D-Coding Industrial Ethernet 100MHz

Female socket backmounting, axial, with shroud, installation height 5,5mm

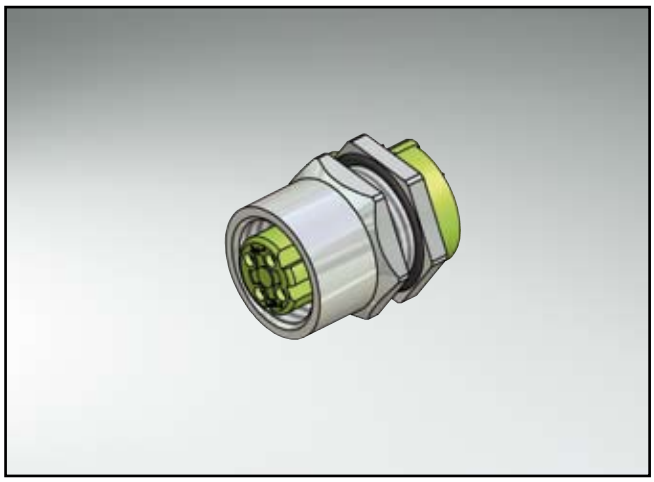

Technical Data

Rated voltage	4-pos / 250V
Current rating	4A at +40°C
Pollution degree	3/2
Insulation resistance	=$10^9\Omega$
Degree of protection	IP67 in mated condition
Temperature range	-30°C to +85°C
Mating cycles	<=100

Directive 2002 95 EC „RoHS" Compliant

Pin configuration

4-pos

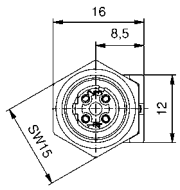

Hole pattern printing board

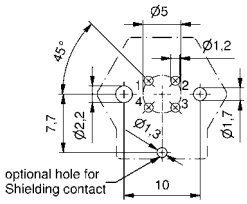

Dimension drawing

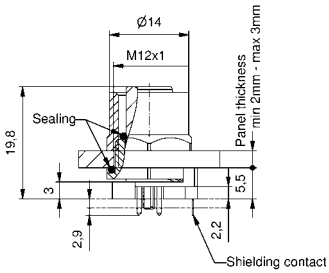

Feedthrough

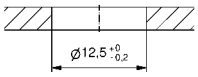

Order data

Length/L contacts	Description	4-pos Part-no.
5,5mm	SAL-12D-FKH4-X5,5	43-01223

SAL M12x1 Connectors - D-Coding Industrial Ethernet 100MHz

Female socket backmounting, axial, with shroud, installation height 10mm

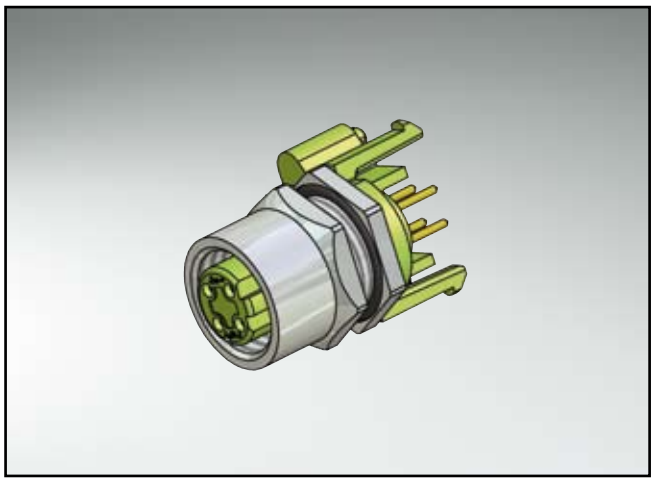

Technical Data

Rated voltage	4-pos / 250V
Current rating	4A at +40°C
Pollution degree	3/2
Insulation resistance	=$10^9\Omega$
Degree of protection	IP67 in mated condition
Temperature range	-30°C to +85°C
Mating cycles	<=100

Directive 2002 95 EC „RoHS" Compliant

Pin configuration

4-pos

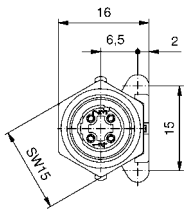

Hole pattern printing board

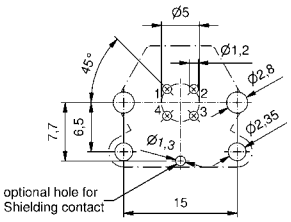

Dimension drawing

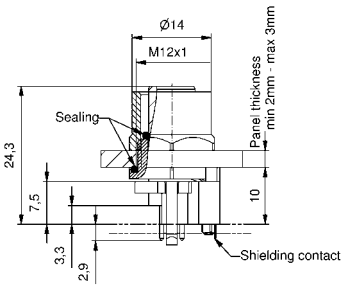

Feedthrough

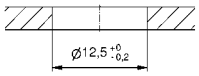

Order data

Length/L contacts	Description	4-pos Part-no.
10mm	SAL-12D-FKH4-X10	43-01221

SAL M12x1 Connectors - D-Coding Industrial Ethernet 100MHz

Female socket backmounting, angled, with shroud

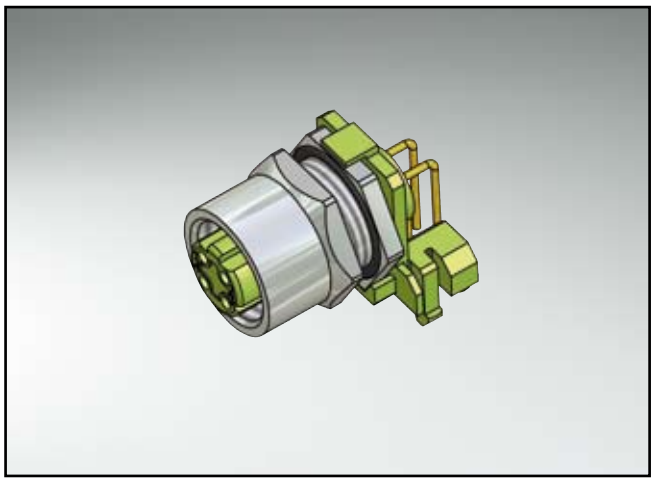

Technical Data

Rated voltage	4-pos / 250V
Current rating	4A at +40°C
Pollution degree	3/2
Insulation resistance	=$10^9\Omega$
Degree of protection	IP67 in mated condition
Temperature range	-30°C to +85°C
Mating cycles	<=100

Directive 2002 95 EC „RoHS" Compliant

Pin configuration

4-pos

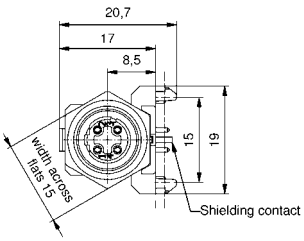

Hole pattern printing board

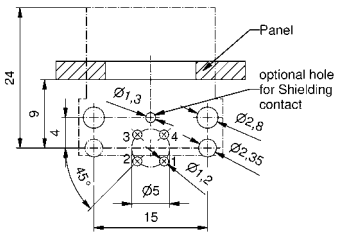

Dimension drawing

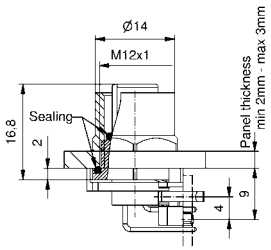

Feedthrough

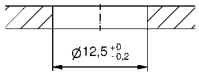

Order data

Description	4-pos Part-no.
SAL-12D-FKHW4	43-01229

Section 7
M8x1/Ø8mm Connectors

The small yet robust M8 x 1/Ø8 mm circular connector is ideal for compact and space-sensitive industrial applications. This small brother to the M12x1 circular connector has an installation-friendly and compact design. A handy lock nut/screw with integrated anti-vibration locking ensures a reliable connection.

You can choose from adapters with a screw and snap design, connectors with a screw and screw/snap design (each available in an axial/angled version).

SAL M8x1/Ø8mm Connectors overmoulded

Nomenclature

S A L - 8 - R K W S 3 - 3 / A 1

SAL
Sensor Actor Line

Installation size
8 = M8x1/ Ø8 mm

Building
R = Circular connector

Configuration
K = Female connector
S = Male connector

Building
= Axial
W = Angled

Building
= Screwable
S = Snap-in
U = Screwable/Snap-in

Number of poles
3 = 3-pos
4 = 4-pos

Cable length
XX = Length [m]

Cable quality
A1 = PVC, grey
K1 = TPU, black, high flexible, halogenfree, UL

SAL M8x1/Ø8mm Connectors overmoulded

Technical Data

Basic material	
Contact	CuZn
Contact plating	Nickel plated, gold-plated
Contact carrier	TPU GF, UL 94
Moulding body	TPU, UL 94, grey
Sealing	FPM
Coupling nut/-srew	CuZn, nickel-plated

Information on the following pages are basing on below mentioned IEC-standards.

Rated voltage	IEC 61076-2-101
Current rating	IEC 61076-2-101
Insulation resistance	IEC 60512-2
Pollution degree	IEC 60664-1
Degree of protection	IEC 60529
Temperature range	IEC 60664-1
Mating cycles	IEC 61076-2-101

Technical subject to change without notice.

SAL M8x1 CONNECTORS

Female connector, axial, screwable

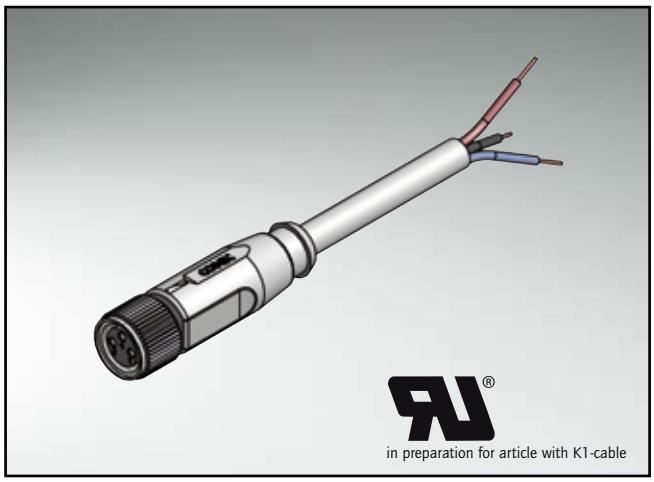

TECHNICAL DATA

Rated voltage	3-pos	4-pos
	60V	30V
Current rating	4A at +40°C	
Pollution degree	3/2	
Insulation resistance	=$10^9\Omega$	
Degree of protection	IP67 in mated condition	
Temperature range	-30°C to +80°C	
Mating cycles	<=100	

DIRECTIVE 2002 95 EC „RoHS" COMPLIANT

PIN CONFIGURATION

3-pos

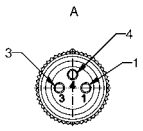

4-pos

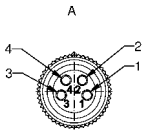

CONTACT ASSIGNMENT 3 - 4-POS

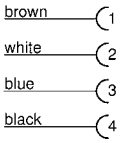

DIMENSION DRAWING

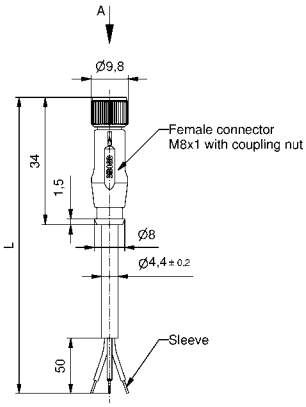

ORDER DATA

Cable	Length/L	Description	3-pos Part-no.	Description	4-pos Part-no.
PVC, grey LiYY 0,25mm²	2m	SAL-8-RK3-2/A1	42-10000	SAL-8-RK4-2/A1	42-10032
	3m	SAL-8-RK3-3/A1	42-10001	SAL-8-RK4-3/A1	42-10033
	5m	SAL-8-RK3-5/A1	42-10002	SAL-8-RK4-5/A1	42-10034
	10m	SAL-8-RK3-10/A1	42-10003	SAL-8-RK4-10/A1	42-10035
TPU, high flexible halogenfree, UL black Li9Y11Y 0,25mm²	2m	SAL-8-RK3-2/K1	42-10004	SAL-8-RK4-2/K1	42-10036
	3m	SAL-8-RK3-3/K1	42-10005	SAL-8-RK4-3/K1	42-10037
	5m	SAL-8-RK3-5/K1	42-10006	SAL-8-RK4-5/K1	42-10038
	10m	SAL-8-RK3-10/K1	42-10007	SAL-8-RK4-10/K1	42-10039

For custom length or quality levels contact factory.

SAL M8x1 CONNECTORS

Male connector, axial, screwable

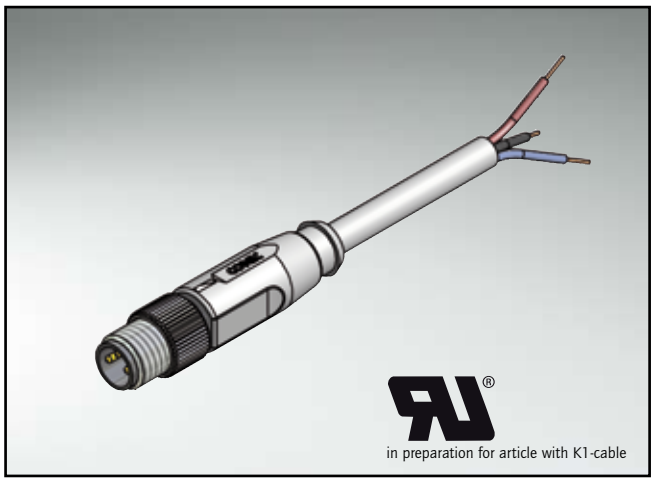

TECHNICAL DATA

	3-pos	4-pos
Rated voltage	60V	30V
Current rating	4A at +40°C	
Pollution degree	3/2	
Insulation resistance	=$10^9\Omega$	
Degree of protection	IP67 in mated condition	
Temperature range	-30°C to +80°C	
Mating cycles	<=100	

DIRECTIVE 2002 95 EC „RoHS" COMPLIANT

PIN CONFIGURATION

3-pos

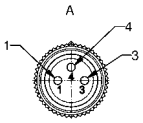

4-pos

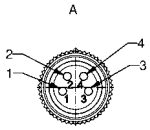

CONTACT ASSIGNMENT 3 - 4-POS

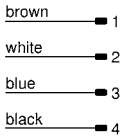

DIMENSION DRAWING

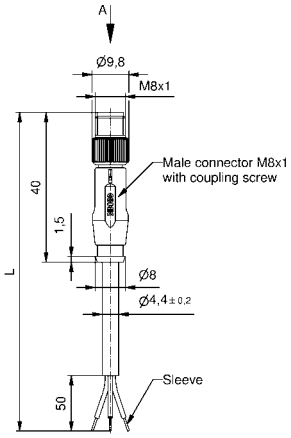

ORDER DATA

Cable	Length/L	Description	3-pos Part-no.	Description	4-pos Part-no.
PVC, grey LiYY 0,25mm²	2m	SAL-8-RS3-2/A1	42-10008	SAL-8-RS4-2/A1	42-10040
	3m	SAL-8-RS3-3/A1	42-10009	SAL-8-RS4-3/A1	42-10041
	5m	SAL-8-RS3-5/A1	42-10010	SAL-8-RS4-5/A1	42-10042
	10m	SAL-8-RS3-10/A1	42-10011	SAL-8-RS4-10/A1	42-10043
TPU, high flexible halogenfree, UL black Li9Y11Y 0,25mm²	2m	SAL-8-RS3-2/K1	42-10012	SAL-8-RS4-2/K1	42-10044
	3m	SAL-8-RS3-3/K1	42-10013	SAL-8-RS4-3/K1	42-10045
	5m	SAL-8-RS3-5/K1	42-10014	SAL-8-RS4-5/K1	42-10046
	10m	SAL-8-RS3-10/K1	42-10015	SAL-8-RS4-10/K1	42-10047

For custom length or quality levels contact factory.

SAL M8x1 CONNECTORS

Female connector, angled, screwable

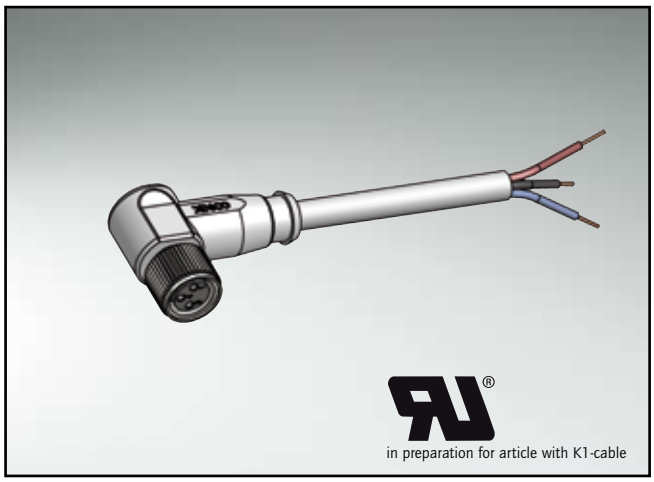

TECHNICAL DATA

Rated voltage	3-pos	4-pos
	60V	30V
Current rating	4A at +40°C	
Pollution degree	3/2	
Insulation resistance	=$10^9\Omega$	
Degree of protection	IP67 in mated condition	
Temperature range	-30°C to +80°C	
Mating cycles	<=100	

DIRECTIVE 2002 95 EC „RoHS" COMPLIANT

PIN CONFIGURATION

3-pos

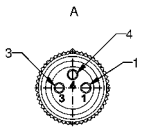

4-pos

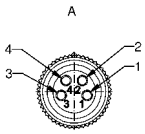

CONTACT ASSIGNMENT 3 - 4-POS

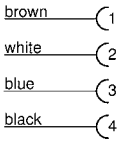

DIMENSION DRAWING

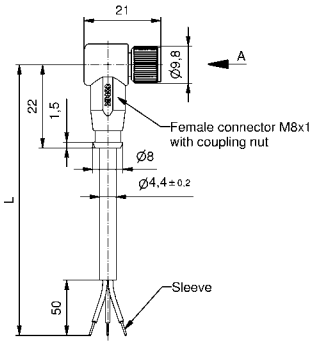

ORDER DATA

Cable	Length/L	Description	3-pos Part-no.	Description	4-pos Part-no.
PVC, grey LiYY 0,25mm²	2m	SAL-8-RKW3-2/A1	42-10016	SAL-8-RKW4-2/A1	42-10048
	3m	SAL-8-RKW3-3/A1	42-10017	SAL-8-RKW4-3/A1	42-10049
	5m	SAL-8-RKW3-5/A1	42-10018	SAL-8-RKW4-5/A1	42-10050
	10m	SAL-8-RKW3-10/A1	42-10019	SAL-8-RKW4-10/A1	42-10051
TPU, high flexible halogenfree, UL black Li9Y11Y 0,25mm²	2m	SAL-8-RKW3-2/K1	42-10020	SAL-8-RKW4-2/K1	42-10052
	3m	SAL-8-RKW3-3/K1	42-10021	SAL-8-RKW4-3/K1	42-10053
	5m	SAL-8-RKW3-5/K1	42-10022	SAL-8-RKW4-5/K1	42-10054
	10m	SAL-8-RKW3-10/K1	42-10023	SAL-8-RKW4-10/K1	42-10055

For custom length or quality levels contact factory.

SAL M8x1 CONNECTORS

Male connector, angled, screwable

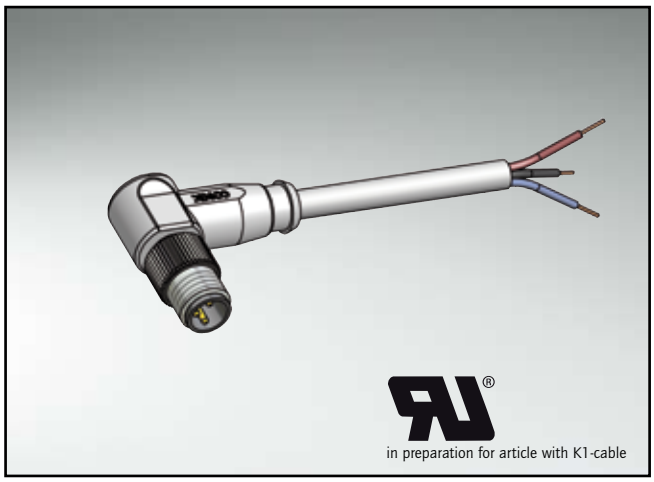

TECHNICAL DATA

	3-pos	4-pos
Rated voltage	60V	30V
Current rating	4A at +40°C	
Pollution degree	3/2	
Insulation resistance	=10⁹Ω	
Degree of protection	IP67 in mated condition	
Temperature range	-30°C to +80°C	
Mating cycles	<=100	

DIRECTIVE 2002 95 EC „RoHS" COMPLIANT

PIN CONFIGURATION

3-pos

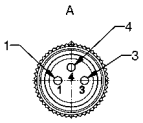

4-pos

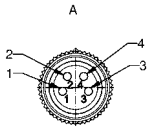

CONTACT ASSIGNMENT 3 - 4-POS

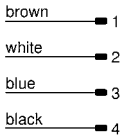

DIMENSION DRAWING

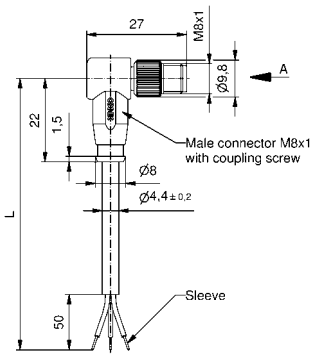

ORDER DATA

Cable	Length/L	Description	3-pos Part-no.	Description	4-pos Part-no.
PVC, grey LiYY 0,25mm²	2m	SAL-8-RSW3-2/A1	42-10024	SAL-8-RSW4-2/A1	42-10056
	3m	SAL-8-RSW3-3/A1	42-10025	SAL-8-RSW4-3/A1	42-10057
	5m	SAL-8-RSW3-5/A1	42-10026	SAL-8-RSW4-5/A1	42-10058
	10m	SAL-8-RSW3-10/A1	42-10027	SAL-8-RSW4-10/A1	42-10059
TPU, high flexible halogenfree, UL black Li9Y11Y 0,25mm²	2m	SAL-8-RSW3-2/K1	42-10028	SAL-8-RSW4-2/K1	42-10060
	3m	SAL-8-RSW3-3/K1	42-10029	SAL-8-RSW4-3/K1	42-10061
	5m	SAL-8-RSW3-5/K1	42-10030	SAL-8-RSW4-5/K1	42-10062
	10m	SAL-8-RSW3-10/K1	42-10031	SAL-8-RSW4-10/K1	42-10063

For custom length or quality levels contact factory.

SAL Ø8MM CONNECTORS

Female connector, axial, snap-in

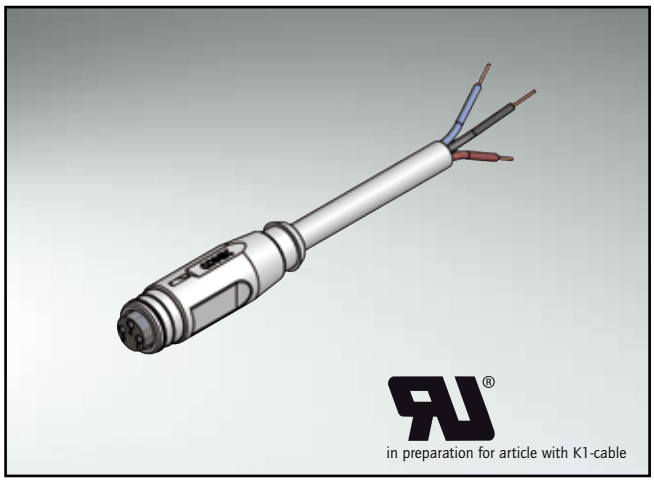

TECHNICAL DATA

	3-pos	4-pos
Rated voltage	60V	30V
Current rating	4A at +40°C	
Pollution degree	3/2	
Insulation resistance	=$10^9\Omega$	
Degree of protection	IP67 in mated condition	
Temperature range	-30°C to +80°C	
Mating cycles	<=100	

DIRECTIVE 2002 95 EC „RoHS" COMPLIANT

PIN CONFIGURATION

3-pos

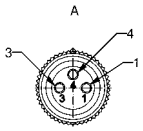

4-pos

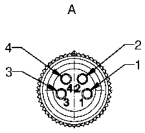

CONTACT ASSIGNMENT 3 - 4-POS

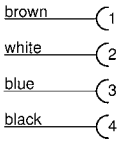

DIMENSION DRAWING

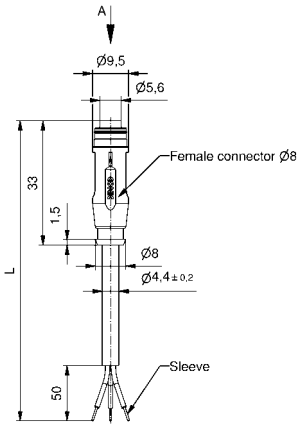

ORDER DATA

Cable	Length/L	Description	3-pos Part-no.	Description	4-pos Part-no.
PVC, grey LiYY 0,25mm²	2m	SAL-8-RKS3-2/A1	42-10064	SAL-8-RKS4-2/A1	42-10096
	3m	SAL-8-RKS3-3/A1	42-10065	SAL-8-RKS4-3/A1	42-10097
	5m	SAL-8-RKS3-5/A1	42-10066	SAL-8-RKS4-5/A1	42-10098
	10m	SAL-8-RKS3-10/A1	42-10067	SAL-8-RKS4-10/A1	42-10099
TPU, high flexible halogenfree, UL black Li9Y11Y 0,25mm²	2m	SAL-8-RKS3-2/K1	42-10068	SAL-8-RKS4-2/K1	42-10100
	3m	SAL-8-RKS3-3/K1	42-10069	SAL-8-RKS4-3/K1	42-10101
	5m	SAL-8-RKS3-5/K1	42-10070	SAL-8-RKS4-5/K1	42-10102
	10m	SAL-8-RKS3-10/K1	42-10071	SAL-8-RKS4-10/K1	42-10103

For custom length or quality levels contact factory.

SAL M8x1/Ø8mm Connectors

Male connector, axial, screwable/snap-in

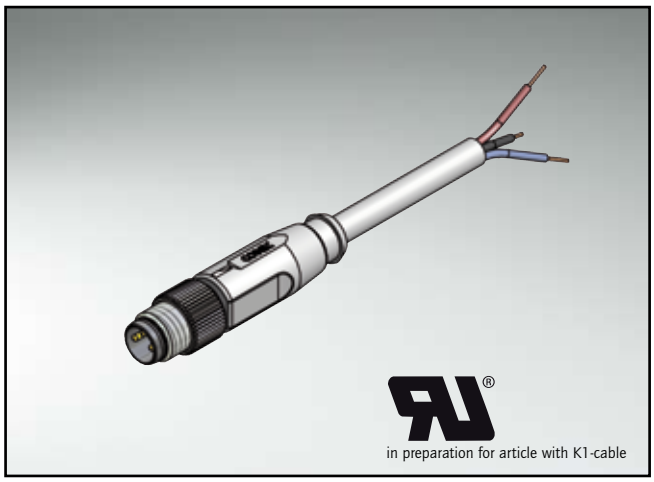

Technical Data

	3-pos	4-pos
Rated voltage	60V	30V
Current rating	4A at +40°C	
Pollution degree	3/2	
Insulation resistance	=10⁹Ω	
Degree of protection	IP67 in mated condition	
Temperature range	-30°C to +80°C	
Mating cycles	<=100	

Directive 2002 95 EC „RoHS" Compliant

Pin configuration

3-pos

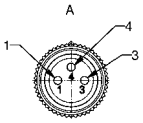

4-pos

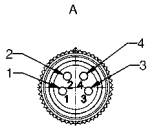

Contact assignment 3 - 4-pos

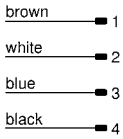

Dimension drawing

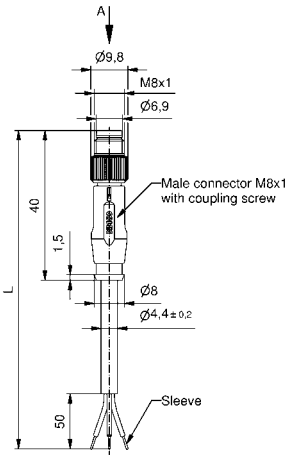

Order data

Cable	Length/L	Description	3-pos Part-no.	Description	4-pos Part-no.
PVC, grey LiYY 0,25mm²	2m	SAL-8-RSU3-2/A1	42-10072	SAL-8-RSU4-2/A1	42-10104
	3m	SAL-8-RSU3-3/A1	42-10073	SAL-8-RSU4-3/A1	42-10105
	5m	SAL-8-RSU3-5/A1	42-10074	SAL-8-RSU4-5/A1	42-10106
	10m	SAL-8-RSU3-10/A1	42-10075	SAL-8-RSU4-10/A1	42-10107
TPU, high flexible halogenfree, UL black Li9Y11Y 0,25mm²	2m	SAL-8-RSU3-2/K1	42-10076	SAL-8-RSU4-2/K1	42-10108
	3m	SAL-8-RSU3-3/K1	42-10077	SAL-8-RSU4-3/K1	42-10109
	5m	SAL-8-RSU3-5/K1	42-10078	SAL-8-RSU4-5/K1	42-10110
	10m	SAL-8-RSU3-10/K1	42-10079	SAL-8-RSU4-10/K1	42-10111

For custom length or quality levels contact factory.

SAL Ø8MM CONNECTORS

Female connector, angled, snap-in

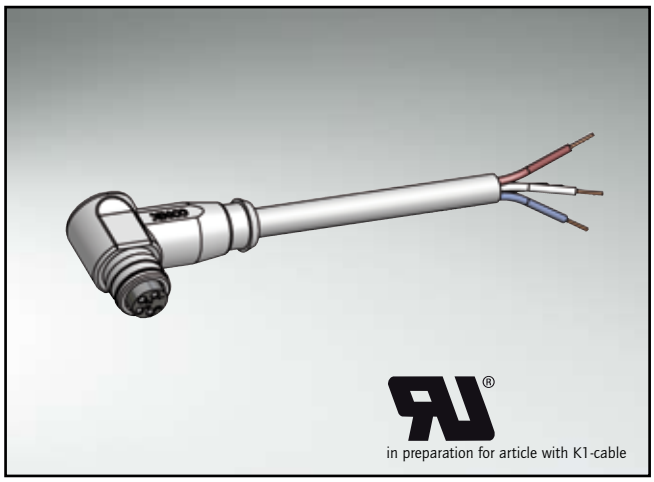

TECHNICAL DATA

	3-pos	4-pos
Rated voltage	60V	30V
Current rating	4A at +40°C	
Pollution degree	3/2	
Insulation resistance	=$10^9\Omega$	
Degree of protection	IP67 in mated condition	
Temperature range	-30°C to +80°C	
Mating cycles	<=100	

DIRECTIVE 2002 95 EC „RoHS" COMPLIANT

PIN CONFIGURATION

3-pos

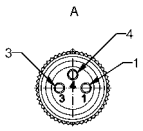

4-pos

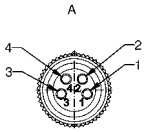

CONTACT ASSIGNMENT 3 - 4-POS

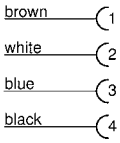

DIMENSION DRAWING

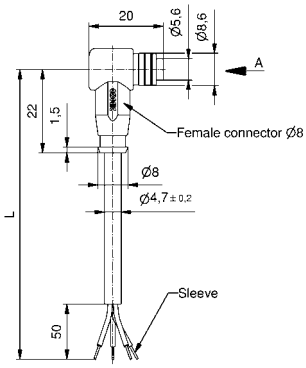

ORDER DATA

Cable	Length/L	Description	3-pos Part-no.	Description	4-pos Part-no.
PVC, grey, LiYY 0,25mm²	2m	SAL-8-RKWS3-2/A1	42-10080	SAL-8-RKWS4-2/A1	42-10112
	3m	SAL-8-RKWS3-3/A1	42-10081	SAL-8-RKWS4-3/A1	42-10113
	5m	SAL-8-RKWS3-5/A1	42-10082	SAL-8-RKWS4-5/A1	42-10114
	10m	SAL-8-RKWS3-10/A1	42-10083	SAL-8-RKWS4-10/A1	42-10115
TPU, high flexible halogenfree, UL black Li9Y11Y 0,25mm²	2m	SAL-8-RKWS3-2/K1	42-10084	SAL-8-RKWS4-2/K1	42-10116
	3m	SAL-8-RKWS3-3/K1	42-10085	SAL-8-RKWS4-3/K1	42-10117
	5m	SAL-8-RKWS3-5/K1	42-10086	SAL-8-RKWS4-5/K1	42-10118
	10m	SAL-8-RKWS3-10/K1	42-10087	SAL-8-RKWS4-10/K1	42-10119

For custom length or quality levels contact factory.

SAL M8x1/Ø8mm Connectors

Male connector, angled, screwable/snap-in

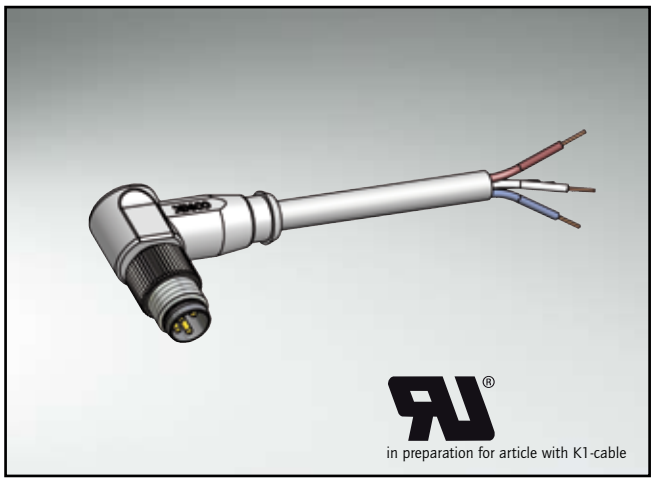

Technical Data

	3-pos	4-pos
Rated voltage	60V	30V
Current rating	4A at +40°C	
Pollution degree	3/2	
Insulation resistance	=$10^9\Omega$	
Degree of protection	IP67 in mated condition	
Temperature range	-30°C to +80°C	
Mating cycles	<=100	

Directive 2002 95 EC „RoHS" Compliant

Pin configuration

3-pos

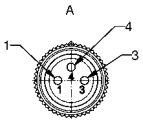

4-pos

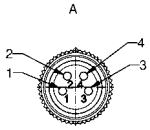

Contact assignment 3 - 4-pos

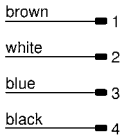

Dimension drawing

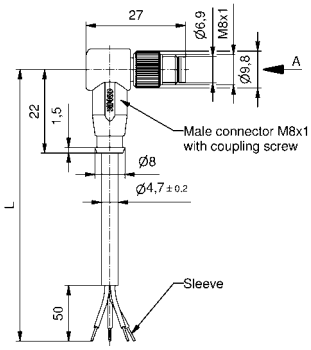

Order data

Cable	Length/L	Description	3-pos Part-no.	Description	4-pos Part-no.
PVC, grey LiYY 0,25mm²	2m	SAL-8-RSWU3-2/A1	42-10088	SAL-8-RSWU4-2/A1	42-10120
	3m	SAL-8-RSWU3-3/A1	42-10089	SAL-8-RSWU4-3/A1	42-10121
	5m	SAL-8-RSWU3-5/A1	42-10090	SAL-8-RSWU4-5/A1	42-10122
	10m	SAL-8-RSWU3-10/A1	42-10091	SAL-8-RSWU4-10/A1	42-10123
TPU, high flexible halogenfree, UL black Li9Y11Y 0,25mm²	2m	SAL-8-RSWU3-2/K1	42-10092	SAL-8-RSWU4-2/K1	42-10124
	3m	SAL-8-RSWU3-3/K1	42-10093	SAL-8-RSWU4-3/K1	42-10125
	5m	SAL-8-RSWU3-5/K1	42-10094	SAL-8-RSWU4-5/K1	42-10126
	10m	SAL-8-RSWU3-10/K1	42-10095	SAL-8-RSWU4-10/K1	42-10127

For custom length or quality levels contact factory.

SAL M8x1 CONNECTORS

Connecting cable

Female connector M8x1, axial, screwable – Male connector M8x1, axial, screwable

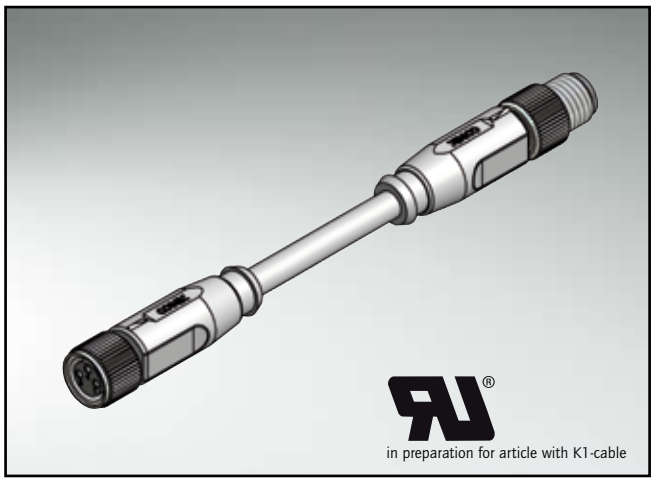

TECHNICAL DATA

Rated voltage	3-pos	4-pos
	60V	30V
Current rating	4A at +40°C	
Pollution degree	3/2	
Insulation resistance	=$10^9\Omega$	
Degree of protection	IP67 in mated condition	
Temperature range	-30°C to +80°C	
Mating cycles	<=100	

DIRECTIVE 2002 95 EC „RoHS" COMPLIANT

PIN CONFIGURATION

3-pos female

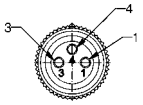

4-pos female

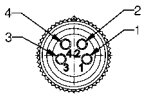

3-pos male

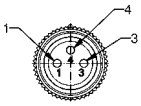

4-pos male

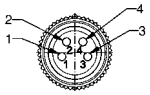

CONTACT ASSIGNMENT 3 - 4-POS

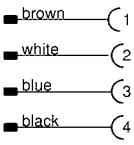

DIMENSION DRAWING

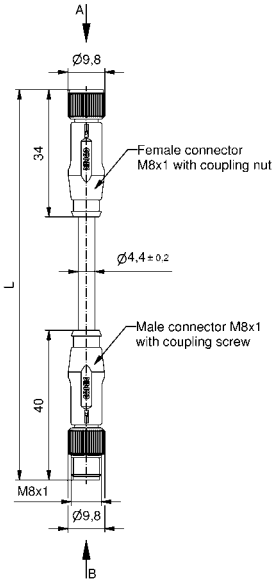

ORDER DATA

Cable	Length/L	Description	3-pos Part-no.	Description	4-pos Part-no.
PVC, grey LiYY 0,25mm²	0,3m	SAL-8-RK3-RS3-0,3/A1	42-10141	SAL-8-RK4-RS4-0,3/A1	42-10157
	0,6m	SAL-8-RK3-RS3-0,6/A1	42-10142	SAL-8-RK4-RS4-0,6/A1	42-10158
	1,5m	SAL-8-RK3-RS3-1,5/A1	42-10143	SAL-8-RK4-RS4-1,5/A1	42-10159
	3,0m	SAL-8-RK3-RS3-3/A1	42-10144	SAL-8-RK4-RS4-3/A1	42-10160
TPU, high flexible halogenfree, UL black Li9Y11Y 0,25mm²	0,3m	SAL-8-RK3-RS3-0,3/K1	42-10145	SAL-8-RK4-RS4-0,3/K1	42-10161
	0,6m	SAL-8-RK3-RS3-0,6/K1	42-10146	SAL-8-RK4-RS4-0,6/K1	42-10162
	1,5m	SAL-8-RK3-RS3-1,5/K1	42-10147	SAL-8-RK4-RS4-1,5/K1	42-10163
	3,0m	SAL-8-RK3-RS3-3/K1	42-10148	SAL-8-RK4-RS4-3/K1	42-10164

For custom length or quality levels contact factory.

SAL M8x1 CONNECTORS

Connecting cable

Female connector M8x1, angled, screwable – Male connector M8x1, axial, screwable

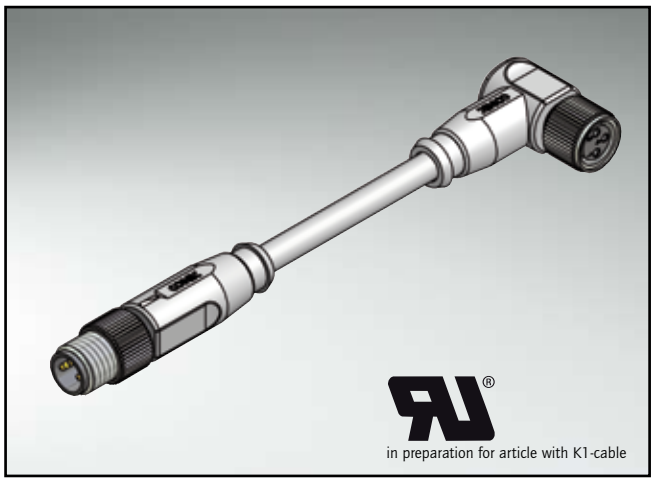

TECHNICAL DATA

Rated voltage	3-pos	4-pos
	60V	30V
Current rating	4A at +40°C	
Pollution degree	3/2	
Insulation resistance	=$10^9\Omega$	
Degree of protection	IP67 in mated condition	
Temperature range	-30°C to +80°C	
Mating cycles	<=100	

DIRECTIVE 2002 95 EC „RoHS" COMPLIANT

PIN CONFIGURATION

3-pos female

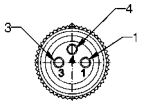

4-pos female

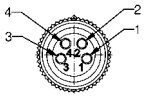

3-pos male

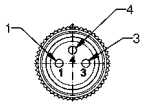

4-pos male

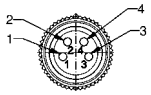

CONTACT ASSIGNMENT 3 - 4-POS

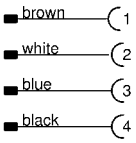

DIMENSION DRAWING

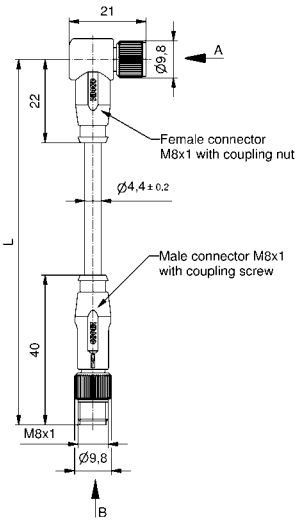

ORDER DATA

Cable	Length/L	Description	3-pos Part-no.	Description	4-pos Part-no.
PVC, grey LiYY 0,25mm²	0,3m	SAL-8-RKW3-RS3-0,3/A1	42-10149	SAL-8-RKW4-RS4-0,3/A1	42-10165
	0,6m	SAL-8-RKW3-RS3-0,6/A1	42-10150	SAL-8-RKW4-RS4-0,6/A1	42-10166
	1,5m	SAL-8-RKW3-RS3-1,5/A1	42-10151	SAL-8-RKW4-RS4-1,5/A1	42-10167
	3,0m	SAL-8-RKW3-RS3-3/A1	42-10152	SAL-8-RKW4-RS4-3/A1	42-10168
TPU, high flexible halogenfree, UL black Li9Y11Y 0,25mm²	0,3m	SAL-8-RKW3-RS3-0,3/K1	42-10153	SAL-8-RKW4-RS4-0,3/K1	42-10169
	0,6m	SAL-8-RKW3-RS3-0,6/K1	42-10154	SAL-8-RKW4-RS4-0,6/K1	42-10170
	1,5m	SAL-8-RKW3-RS3-1,5/K1	42-10155	SAL-8-RKW4-RS4-1,5/K1	42-10171
	3,0m	SAL-8-RKW3-RS3-3/K1	42-10156	SAL-8-RKW4-RS4-3/K1	42-10172

For custom length or quality levels contact factory.

SAL M8x1/Ø8mm Connectors

Connecting cable Female connector Ø8mm, axial, snap-in – Male connector M8x1/Ø8mm, axial, screwable/snap-in

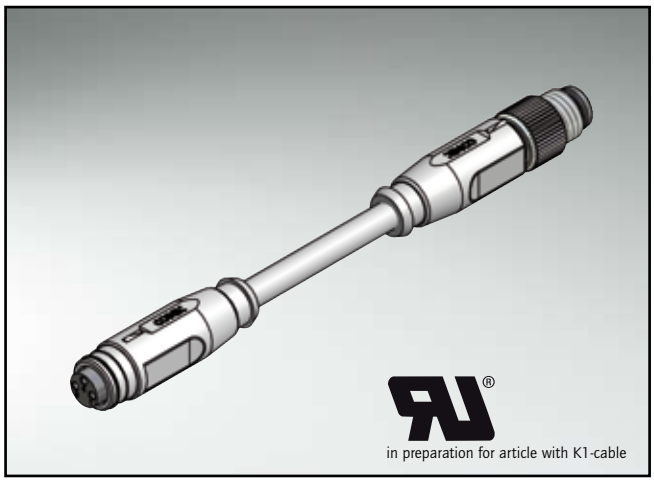

Technical Data

	3-pos	4-pos
Rated voltage	60V	30V
Current rating	4A at +40°C	
Pollution degree	3/2	
Insulation resistance	=$10^9\Omega$	
Degree of protection	IP67 in mated condition	
Temperature range	-30°C to +80°C	
Mating cycles	<=100	

Directive 2002 95 EC „RoHS" Compliant

Pin configuration

3-pos female

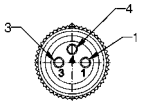

4-pos female

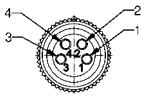

3-pos male

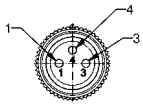

4-pos male

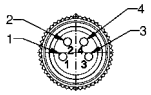

Contact assignment 3 - 4-pos

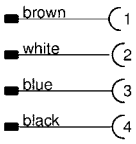

Dimension drawing

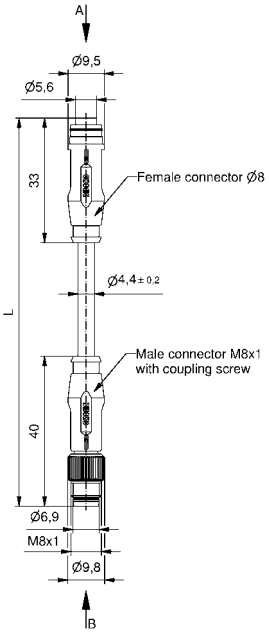

Order data

Cable	Length/L	Description	3-pos Part-no.	Description	4-pos Part-no.
PVC, grey LiYY 0,25mm²	0,3m	SAL-8-RKS3-RSU3-0,3/A1	42-10173	SAL-8-RKS4-RSU4-0,3/A1	42-10189
	0,6m	SAL-8-RKS3-RSU3-0,6/A1	42-10174	SAL-8-RKS4-RSU4-0,6/A1	42-10190
	1,5m	SAL-8-RKS3-RSU3-1,5/A1	42-10175	SAL-8-RKS4-RSU4-1,5/A1	42-10191
	3,0m	SAL-8-RKS3-RSU3-3/A1	42-10176	SAL-8-RKS4-RSU4-3/A1	42-10192
TPU, high flexible halogenfree, UL black Li9Y11Y 0,25mm²	0,3m	SAL-8-RKS3-RSU3-0,3/K1	42-10177	SAL-8-RKS4-RSU4-0,3/K1	42-10193
	0,6m	SAL-8-RKS3-RSU3-0,6/K1	42-10178	SAL-8-RKS4-RSU4-0,6/K1	42-10194
	1,5m	SAL-8-RKS3-RSU3-1,5/K1	42-10179	SAL-8-RKS4-RSU4-1,5/K1	42-10195
	3,0m	SAL-8-RKS3-RSU3-3/K1	42-10180	SAL-8-RKS4-RSU4-3/K1	42-10196

For custom length or quality levels contact factory.

SAL M8x1/Ø8mm Connectors

Connecting cable Female connector Ø8mm, angled, snap-in – Male connector M8x1/Ø8mm, axial, screwable/snap-in

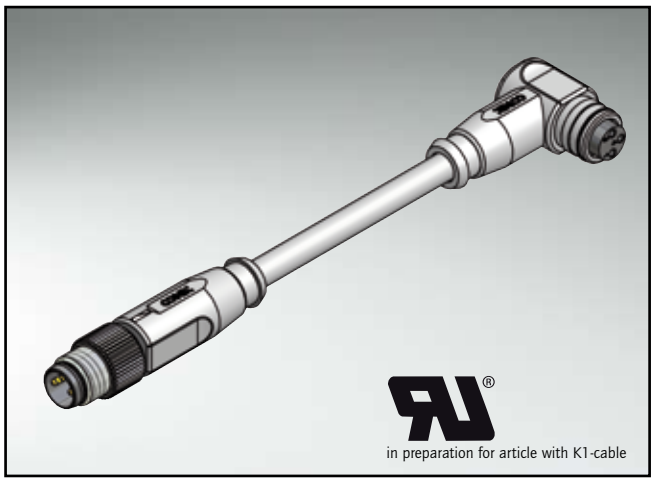

Technical Data

	3-pos	4-pos
Rated voltage	60V	30V
Current rating	4A at +40°C	
Pollution degree	3/2	
Insulation resistance	=$10^9\Omega$	
Degree of protection	IP67 in mated condition	
Temperature range	-30°C to +80°C	
Mating cycles	<=100	

Directive 2002 95 EC „RoHS" Compliant

Pin configuration

3-pos female

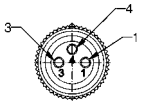

4-pos female

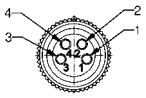

3-pos male

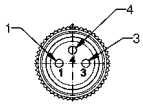

4-pos male

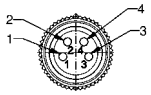

Contact assignment 3 - 4-pos

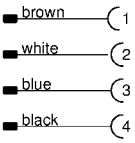

Dimension drawing

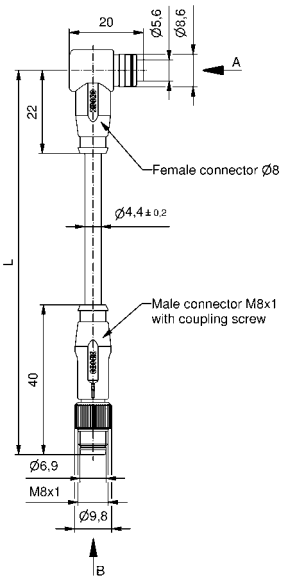

Order data

Cable	Length/L	Description	3-pos Part-no.	Description	4-pos Part-no.
PVC, grey LiYY 0,25mm²	0,3m	SAL-8-RKWS3-RSU3-0,3/A1	42-10181	SAL-8-RKWS4-RSU4-0,3/A1	42-10197
	0,6m	SAL-8-RKWS3-RSU3-0,6/A1	42-10182	SAL-8-RKWS4-RSU4-0,6/A1	42-10198
	1,5m	SAL-8-RKWS3-RSU3-1,5/A1	42-10183	SAL-8-RKWS4-RSU4-1,5/A1	42-10199
	3,0m	SAL-8-RKWS3-RSU3-3/A1	42-10184	SAL-8-RKWS4-RSU4-3/A1	42-10200
TPU, high flexible halogenfree, UL black Li9Y11Y 0,25mm²	0,3m	SAL-8-RKWS3-RSU3-0,3/K1	42-10185	SAL-8-RKWS4-RSU4-0,3/K1	42-10201
	0,6m	SAL-8-RKWS3-RSU3-0,6/K1	42-10186	SAL-8-RKWS4-RSU4-0,6/K1	42-10202
	1,5m	SAL-8-RKWS3-RSU3-1,5/K1	42-10187	SAL-8-RKWS4-RSU4-1,5/K1	42-10203
	3,0m	SAL-8-RKWS3-RSU3-3/K1	42-10188	SAL-8-RKWS4-RSU4-3/K1	42-10204

For custom length or quality levels contact factory.

Section 8
Connectors 7/8"

Round connector-systems with a 7/8"-16 UN thread according to ANSI/B93.55M are proper for applications with increasing power requirement up to 16A as well as higher working voltages e.g. the feed-in of field-devices in the area of automation technics. Insertion in a tough and harsh environment is possible.

The current versions are equipped screwable and got a screwing concept with self-locking (anti-vibration locking).

The 7/8"-family contains versions with overmoulded cable as well as field-attachable components.

SAL 7/8" Connectors overmoulded

Nomenclature

S A L - 7 / 8 - R K W 4 - 2 / A 3 / 150

SAL
Sensor Actor Line

Installation size
7/8 = 7/8"

Building
R = Circular connector

Configuration
K = Female connector
S = Male connector

Building
= Axial
W = Angled

Number of poles
2PE = 2-pos + Ground
4 = 4-pos
4PE = 4-pos + Ground

Cable length
XX = Length [m]

Cable quality
A3 = PVC, grey, UL
K1 = TPU, black, UL

Wire cross-section
= 0,75mm²
150 = 1,5mm²

SAL 7/8" Connectors overmoulded

Technical Data

Basic material	
Contact	CuZn
Contact plating	Nickel plated, gold-plated
Contact carrier	TPU, UL 94
Moulding body	TPU, UL 94
Coupling nut/-srew	CuZn, nickel-plated

Information on the following pages are basing on below mentioned IEC-standards.

Rated voltage	IEC 60664-1
Current rating	IEC 60512-3
Insulation resistance	IEC 60512-2
Pollution degree	IEC 60664-1
Degree of protection	IEC 60529
Temperature range	IEC 60664-1
Mating cycles	IEC 60512-9a

Technical subject to change without notice.

SAL 7/8" Connectors field-attachable

Nomenclature

S A L - 7 / 8 - R K C 4 - S

SAL
Sensor Actor Line

Installation size
7/8 = 7/8"

Building
R = Circular connector

Configuration
K = Female connector
S = Male connector

Building
C = Field-attachable

Number of poles
2PE = 2-pos + Ground
4 = 4-pos
4PE = 4-pos + Ground

Type of connection
S = Screw-termination

SAL 7/8" CONNECTORS FIELD-ATTACHABLE

Technical Data

Basic material	
Contact	CuZn
Contact plating	Nickel plated, gold-plated
Contact carrier	TPU, UL 94
Gehäuse	PA6 GF, UL 94
Cabledichtung	Elastomere
Coupling nut/-srew	CuZn, nickel-plated

Information on the following pages are basing on below mentioned IEC-standards.

Rated voltage	IEC 60664-1
Current rating	IEC 60512-3
Insulation resistance	IEC 60512-2
Pollution degree	IEC 60664-1
Degree of protection	IEC 60529
Temperature range	IEC 60664-1
Mating cycles	IEC 60512-9a

Technical subject to change without notice.

SAL 7/8" CONNECTORS

Female connector, axial

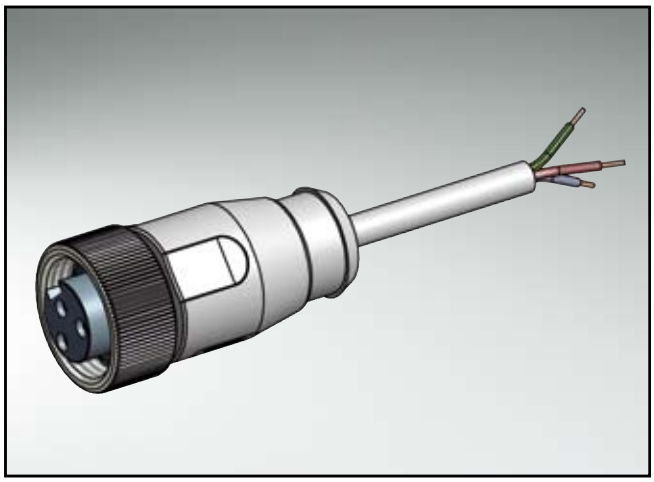

TECHNICAL DATA

	2-pos + GND	4-pos	4-pos + GND
Rated voltage	400V	300V	300V
Current rating	8A at +40°C		
Pollution degree	3/2		
Insulation resistance	$=10^9\Omega$		
Degree of protection	IP68 in mated condition		
Temperature range	-30°C to +80°C		
Mating cycles	<=100		

Directive 2002 95 EC „RoHS" Compliant

PIN CONFIGURATION

2-pos + Ground

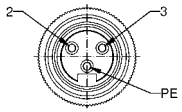

4-pos

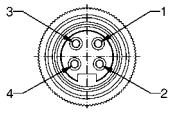

4-pos + Ground

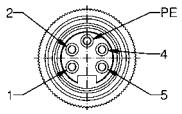

CONTACT ASSIGNMENT 2-POS + GROUND

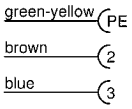

CONTACT ASSIGNMENT 4-POS

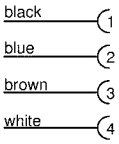

CONTACT ASSIGNMENT 4-POS + GROUND

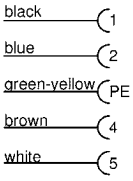

DIMENSION DRAWING

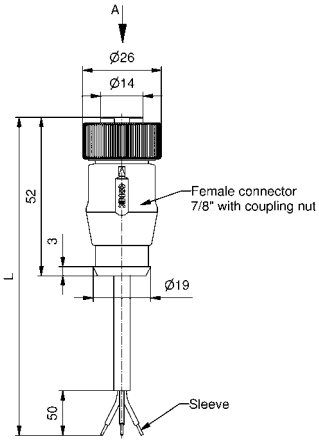

ORDER DATA

Cable	Length/L	Description	2-pos + Ground Part-no.	Description	4-pos Part-no.	Description	4-pos + Ground Part-no.
PVC, UL grey LiYY 0,75mm²	2m	SAL-7/8-RK2PE-2/A3	41-01000	SAL-7/8-RK4-2/A3	41-01032	SAL-7/8-RK4PE-2/A3	41-01064
	3m	SAL-7/8-RK2PE-3/A3	41-01001	SAL-7/8-RK4-3/A3	41-01033	SAL-7/8-RK4PE-3/A3	41-01065
	5m	SAL-7/8-RK2PE-5/A3	41-01002	SAL-7/8-RK4-5/A3	41-01034	SAL-7/8-RK4PE-5/A3	41-01066
	10m	SAL-7/8-RK2PE-10/A3	41-01003	SAL-7/8-RK4-10/A3	41-01035	SAL-7/8-RK4PE-10/A3	41-01067
TPU, high flexible halogenfree, UL black Li9Y11Y 0,75mm²	2m	SAL-7/8-RK2PE-2/K1	41-01004	SAL-7/8-RK4-2/K1	41-01036	SAL-7/8-RK4PE-2/K1	41-01068
	3m	SAL-7/8-RK2PE-3/K1	41-01005	SAL-7/8-RK4-3/K1	41-01037	SAL-7/8-RK4PE-3/K1	41-01069
	5m	SAL-7/8-RK2PE-5/K1	41-01006	SAL-7/8-RK4-5/K1	41-01038	SAL-7/8-RK4PE-5/K1	41-01070
	10m	SAL-7/8-RK2PE-10/K1	41-01007	SAL-7/8-RK4-10/K1	41-01039	SAL-7/8-RK4PE-10/K1	41-01071

For custom length or quality levels contact factory.

SAL 7/8" CONNECTORS

Male connector, axial

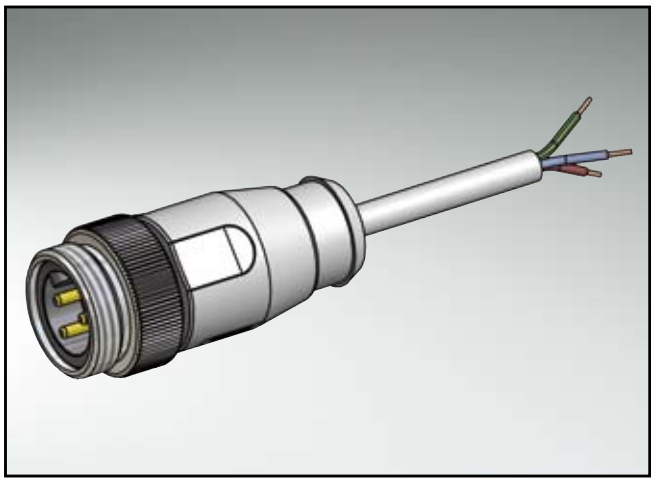

TECHNICAL DATA

	2-pos + GND	4-pos	4-pos + GND
Rated voltage	400V	300V	300V
Current rating	8A at +40°C		
Pollution degree	3/2		
Insulation resistance	=$10^9\Omega$		
Degree of protection	IP68 in mated condition		
Temperature range	-30°C to +80°C		
Mating cycles	<=100		

Directive 2002 95 EC
„RoHS"
Compliant

PIN CONFIGURATION

2-pos + Ground

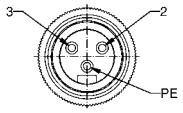

4-pos

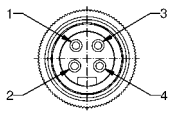

4-pos + Ground

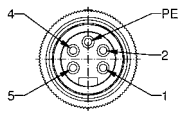

CONTACT ASSIGNMENT 2-POS + GROUND

green-yellow — PE
brown — 2
blue — 3

CONTACT ASSIGNMENT 4-POS

black — 1
blue — 2
brown — 3
white — 4

CONTACT ASSIGNMENT 4-POS + GROUND

black — 1
blue — 2
green-yellow — PE
brown — 4
white — 5

DIMENSION DRAWING

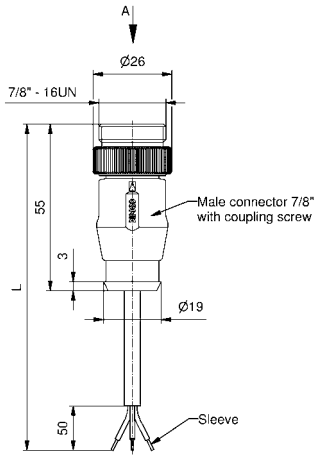

ORDER DATA

Cable	Length/L	Description	2-pos + Ground Part-no.	Description	4-pos Part-no.	Description	4-pos + Ground Part-no.
PVC, UL grey LiYY 0,75mm²	2m	SAL-7/8-RS2PE-2/A3	41-01008	SAL-7/8-RS4-2/A3	41-01040	SAL-7/8-RS4PE-2/A3	41-01072
	3m	SAL-7/8-RS2PE-3/A3	41-01009	SAL-7/8-RS4-3/A3	41-01041	SAL-7/8-RS4PE-3/A3	41-01073
	5m	SAL-7/8-RS2PE-5/A3	41-01010	SAL-7/8-RS4-5/A3	41-01042	SAL-7/8-RS4PE-5/A3	41-01074
	10m	SAL-7/8-RS2PE-10/A3	41-01011	SAL-7/8-RS4-10/A3	41-01043	SAL-7/8-RS4PE-10/A3	41-01075
TPU, high flexible halogenfree, UL black Li9Y11Y 0,75mm²	2m	SAL-7/8-RS2PE-2/K1	41-01012	SAL-7/8-RS4-2/K1	41-01044	SAL-7/8-RS4PE-2/K1	41-01076
	3m	SAL-7/8-RS2PE-3/K1	41-01013	SAL-7/8-RS4-3/K1	41-01045	SAL-7/8-RS4PE-3/K1	41-01077
	5m	SAL-7/8-RS2PE-5/K1	41-01014	SAL-7/8-RS4-5/K1	41-01046	SAL-7/8-RS4PE-5/K1	41-01078
	10m	SAL-7/8-RS2PE-10/K1	41-01015	SAL-7/8-RS4-10/K1	41-01047	SAL-7/8-RS4PE-10/K1	41-01079

For custom length or quality levels contact factory.

SAL 7/8" CONNECTORS

Female connector, angled

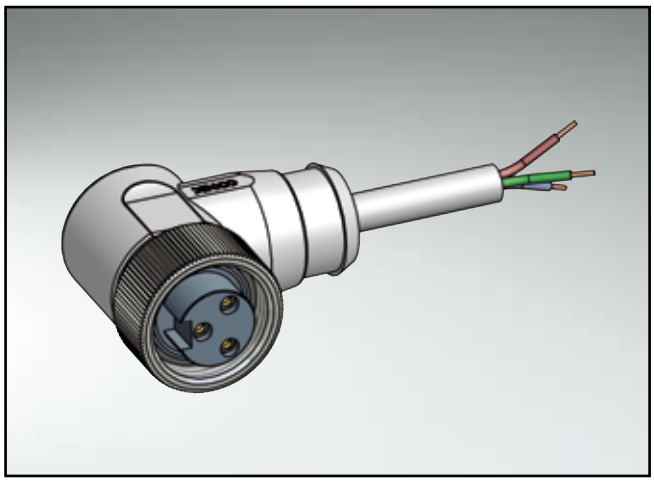

TECHNICAL DATA

Rated voltage	2-pos + GND	4-pos	4-pos + GND
	400V	300V	300V
Current rating	8A at +40°C		
Pollution degree	3/2		
Insulation resistance	=$10^9\Omega$		
Degree of protection	IP68 in mated condition		
Temperature range	-30°C to +80°C		
Mating cycles	<=100		

Directive 2002 95 EC
„RoHS"
Compliant

PIN CONFIGURATION

2-pos + Ground

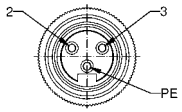

A

4-pos

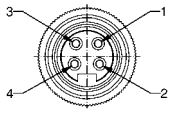

A

4-pos + Ground

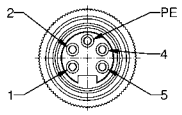

A

CONTACT ASSIGNMENT 2-POS + GROUND

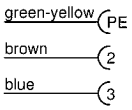

CONTACT ASSIGNMENT 4-POS

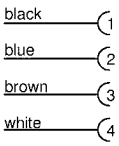

CONTACT ASSIGNMENT 4-POS + GROUND

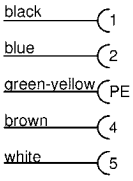

DIMENSION DRAWING

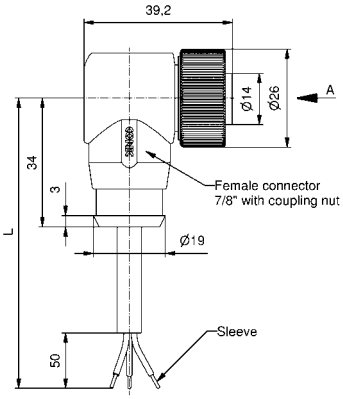

ORDER DATA

Cable	Length/L	Description	2-pos + Ground Part-no.	Description	4-pos Part-no.	Description	4-pos + Ground Part-no.
PVC, UL grey LiYY 0,75mm²	2m	SAL-7/8-RKW2PE-2/A3	41-01016	SAL-7/8-RKW4-2/A3	41-01048	SAL-7/8-RKW4PE-2/A3	41-01080
	3m	SAL-7/8-RKW2PE-3/A3	41-01017	SAL-7/8-RKW4-3/A3	41-01049	SAL-7/8-RKW4PE-3/A3	41-01081
	5m	SAL-7/8-RKW2PE-5/A3	41-01018	SAL-7/8-RKW4-5/A3	41-01050	SAL-7/8-RKW4PE-5/A3	41-01082
	10m	SAL-7/8-RKW2PE-10/A3	41-01019	SAL-7/8-RKW4-10/A3	41-01051	SAL-7/8-RKW4PE-10/A3	41-01083
TPU, high flexible halogenfree, UL black Li9Y11Y 0,75mm²	2m	SAL-7/8-RKW2PE-2/K1	41-01020	SAL-7/8-RKW4-2/K1	41-01052	SAL-7/8-RKW4PE-2/K1	41-01084
	3m	SAL-7/8-RKW2PE-3/K1	41-01021	SAL-7/8-RKW4-3/K1	41-01053	SAL-7/8-RKW4PE-3/K1	41-01085
	5m	SAL-7/8-RKW2PE-5/K1	41-01022	SAL-7/8-RKW4-5/K1	41-01054	SAL-7/8-RKW4PE-5/K1	41-01086
	10m	SAL-7/8-RKW2PE-10/K1	41-01023	SAL-7/8-RKW4-10/K1	41-01055	SAL-7/8-RKW4PE-10/K1	41-01087

For custom length or quality levels contact factory.

SAL 7/8" CONNECTORS

Male connector, angled

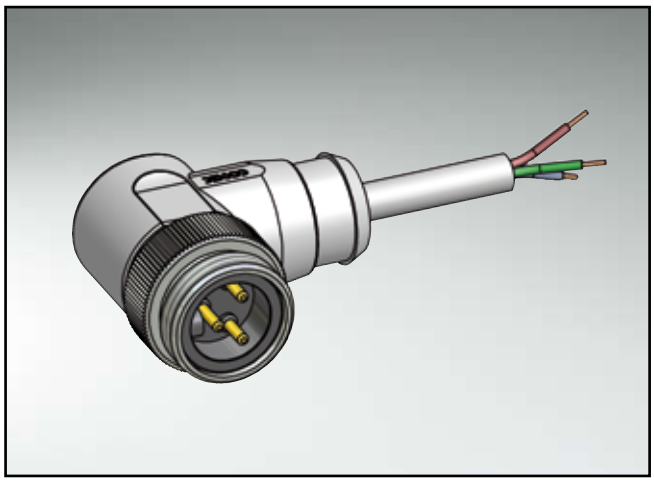

TECHNICAL DATA

Rated voltage	2-pos + GND	4-pos	4-pos + GND
	400V	300V	300V
Current rating	8A at +40°C		
Pollution degree	3/2		
Insulation resistance	=$10^9\Omega$		
Degree of protection	IP68 in mated condition		
Temperature range	-30°C to +80°C		
Mating cycles	<=100		

Directive 2002 95 EC
„RoHS"
Compliant

PIN CONFIGURATION

2-pos + Ground

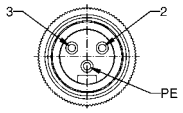

A

4-pos

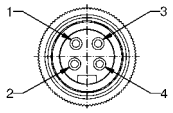

A

4-pos + Ground

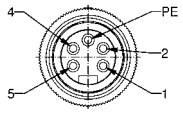

A

CONTACT ASSIGNMENT 2-POS + GROUND

green-yellow — PE
brown — 2
blue — 3

CONTACT ASSIGNMENT 4-POS

black — 1
blue — 2
brown — 3
white — 4

CONTACT ASSIGNMENT 4-POS + GROUND

black — 1
blue — 2
green-yellow — PE
brown — 4
white — 5

DIMENSION DRAWING

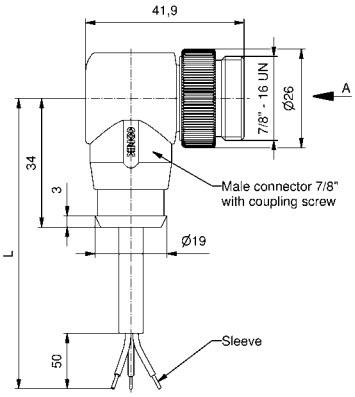

ORDER DATA

Cable	Length/L	Description	2-pos + Ground Part-no.	Description	4-pos Part-no.	Description	4-pos + Ground Part-no.
PVC, UL grey LiYY 0,75mm²	2m	SAL-7/8-RSW2PE-2/A3	41-01024	SAL-7/8-RSW4-2/A3	41-01056	SAL-7/8-RSW4PE-2/A3	41-01088
	3m	SAL-7/8-RSW2PE-3/A3	41-01025	SAL-7/8-RSW4-3/A3	41-01057	SAL-7/8-RSW4PE-3/A3	41-01089
	5m	SAL-7/8-RSW2PE-5/A3	41-01026	SAL-7/8-RSW4-5/A3	41-01058	SAL-7/8-RSW4PE-5/A3	41-01090
	10m	SAL-7/8-RSW2PE-10/A3	41-01027	SAL-7/8-RSW4-10/A3	41-01059	SAL-7/8-RSW4PE-10/A3	41-01091
TPU, high flexible halogenfree, UL black Li9Y11Y 0,75mm²	2m	SAL-7/8-RSW2PE-2/K1	41-01028	SAL-7/8-RSW4-2/K1	41-01060	SAL-7/8-RSW4PE-2/K1	41-01092
	3m	SAL-7/8-RSW2PE-3/K1	41-01029	SAL-7/8-RSW4-3/K1	41-01061	SAL-7/8-RSW4PE-3/K1	41-01093
	5m	SAL-7/8-RSW2PE-5/K1	41-01030	SAL-7/8-RSW4-5/K1	41-01062	SAL-7/8-RSW4PE-5/K1	41-01094
	10m	SAL-7/8-RSW2PE-10/K1	41-01031	SAL-7/8-RSW4-10/K1	41-01063	SAL-7/8-RSW4PE-10/K1	41-01095

For custom length or quality levels contact factory.

SAL 7/8" CONNECTORS

Female connector, axial

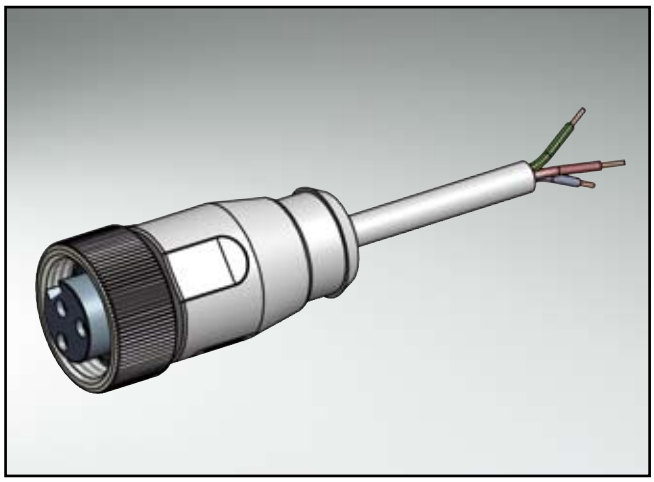

TECHNICAL DATA

Rated voltage	2-pos + GND	4-pos	4-pos + GND
	400V	300V	300V
Current rating	2-pos + GND: 12A at +40°C 4-pos/4-pos + GND: 10A at +40°C		
Pollution degree	3/2		
Insulation resistance	=$10^9\Omega$		
Degree of protection	IP68 in mated condition		
Temperature range	-30°C to +80°C		
Mating cycles	<=100		

Directive 2002 95 EC „RoHS" Compliant

PIN CONFIGURATION

2-pos + Ground

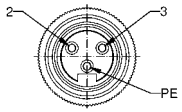

4-pos

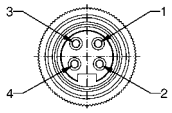

4-pos + Ground

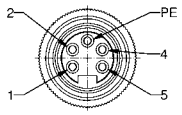

CONTACT ASSIGNMENT 2-POS + GROUND

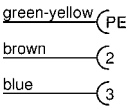

CONTACT ASSIGNMENT 4-POS

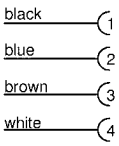

CONTACT ASSIGNMENT 4-POS + GROUND

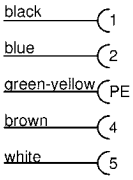

DIMENSION DRAWING

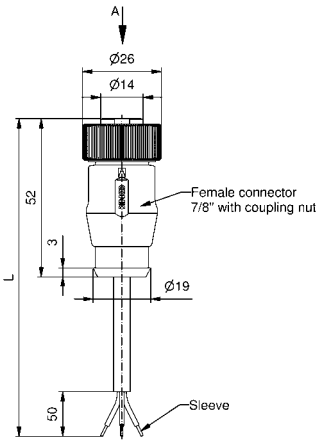

ORDER DATA

Cable	Length/L	Description	2-pos + Ground Part-no.	Description	4-pos Part-no.	Description	4-pos + Ground Part-no.
PVC, UL grey LiYY 1,50mm²	2m	SAL-7/8-RK2PE-2/A3/150	41-01097	SAL-7/8-RK4-2/A3/150	41-01129	SAL-7/8-RK4PE-2/A3/150	41-01161
	3m	SAL-7/8-RK2PE-3/A3/150	41-01098	SAL-7/8-RK4-3/A3/150	41-01130	SAL-7/8-RK4PE-3/A3/150	41-01162
	5m	SAL-7/8-RK2PE-5/A3/150	41-01099	SAL-7/8-RK4-5/A3/150	41-01131	SAL-7/8-RK4PE-5/A3/150	41-01163
	10m	SAL-7/8-RK2PE-10/A3/150	41-01100	SAL-7/8-RK4-10/A3/150	41-01132	SAL-7/8-RK4PE-10/A3/150	41-01164
TPU, high flexible halogenfree, UL black Li9Y11Y 1,50mm²	2m	SAL-7/8-RK2PE-2/K1/150	41-01101	SAL-7/8-RK4-2/K1/150	41-01133	SAL-7/8-RK4PE-2/K1/150	41-01165
	3m	SAL-7/8-RK2PE-3/K1/150	41-01102	SAL-7/8-RK4-3/K1/150	41-01134	SAL-7/8-RK4PE-3/K1/150	41-01166
	5m	SAL-7/8-RK2PE-5/K1/150	41-01103	SAL-7/8-RK4-5/K1/150	41-01135	SAL-7/8-RK4PE-5/K1/150	41-01167
	10m	SAL-7/8-RK2PE-10/K1/150	41-01104	SAL-7/8-RK4-10/K1/150	41-01136	SAL-7/8-RK4PE-10/K1/150	41-01168

For custom length or quality levels contact factory.

SAL 7/8" CONNECTORS

Male connector, axial

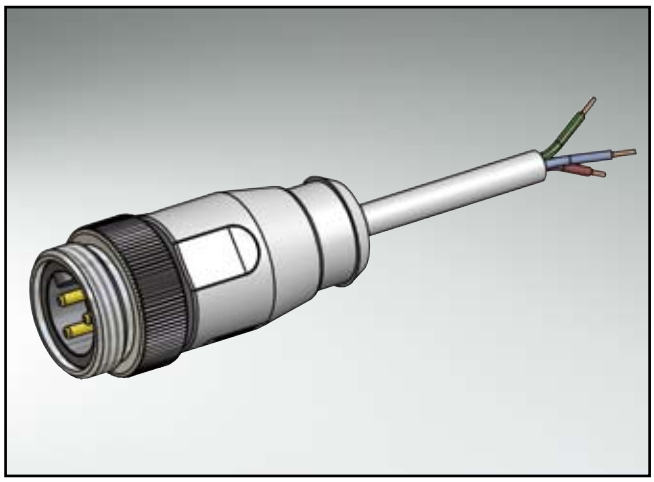

TECHNICAL DATA

Rated voltage	2-pos + GND	4-pos	4-pos + GND
	400V	300V	300V
Current rating	2-pos + GND: 12A at +40°C 4-pos/4-pos + GND: 10A at +40°C		
Pollution degree	3/2		
Insulation resistance	$=10^9\Omega$		
Degree of protection	IP68 in mated condition		
Temperature range	-30°C to +80°C		
Mating cycles	<=100		

Directive 2002 95 EC
„RoHS"
Compliant

PIN CONFIGURATION

2-pos + Ground

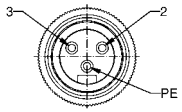

4-pos

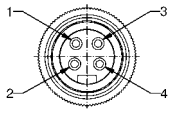

4-pos + Ground

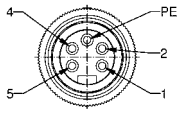

CONTACT ASSIGNMENT 2-POS + GROUND

green-yellow — PE
brown — 2
blue — 3

CONTACT ASSIGNMENT 4-POS

black — 1
blue — 2
brown — 3
white — 4

CONTACT ASSIGNMENT 4-POS + GROUND

black — 1
blue — 2
green-yellow — PE
brown — 4
white — 5

DIMENSION DRAWING

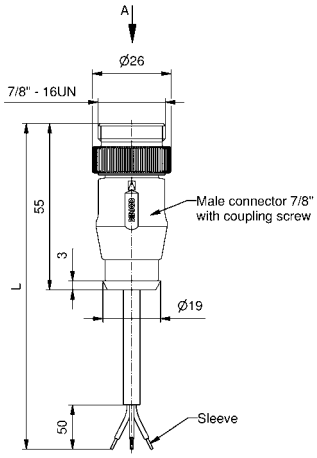

ORDER DATA

Cable	Length/L	Description	2-pos + Ground Part-no.	Description	4-pos Part-no.	Description	4-pos + Ground Part-no.
PVC, UL grey LiYY 1,50mm²	2m	SAL-7/8-RS2PE-2/A3/150	41-01105	SAL-7/8-RS4-2/A3/150	41-01137	SAL-7/8-RS4PE-2/A3/150	41-01169
	3m	SAL-7/8-RS2PE-3/A3/150	41-01106	SAL-7/8-RS4-3/A3/150	41-01138	SAL-7/8-RS4PE-3/A3/150	41-01170
	5m	SAL-7/8-RS2PE-5/A3/150	41-01107	SAL-7/8-RS4-5/A3/150	41-01139	SAL-7/8-RS4PE-5/A3/150	41-01171
	10m	SAL-7/8-RS2PE-10/A3/150	41-01108	SAL-7/8-RS4-10/A3/150	41-01140	SAL-7/8-RS4PE-10/A3/150	41-01172
TPU, high flexible halogenfree, UL black Li9Y11Y 1,50mm²	2m	SAL-7/8-RS2PE-2/K1/150	41-01109	SAL-7/8-RS4-2/K1/150	41-01141	SAL-7/8-RS4PE-2/K1/150	41-01173
	3m	SAL-7/8-RS2PE-3/K1/150	41-01110	SAL-7/8-RS4-3/K1/150	41-01142	SAL-7/8-RS4PE-3/K1/150	41-01174
	5m	SAL-7/8-RS2PE-5/K1/150	41-01111	SAL-7/8-RS4-5/K1/150	41-01143	SAL-7/8-RS4PE-5/K1/150	41-01175
	10m	SAL-7/8-RS2PE-10/K1/150	41-01112	SAL-7/8-RS4-10/K1/150	41-01144	SAL-7/8-RS4PE-10/K1/150	41-01176

Andere Lengthn and Leitungsaufbauten auf Anfrage

SAL 7/8" CONNECTORS

Female connector, angled

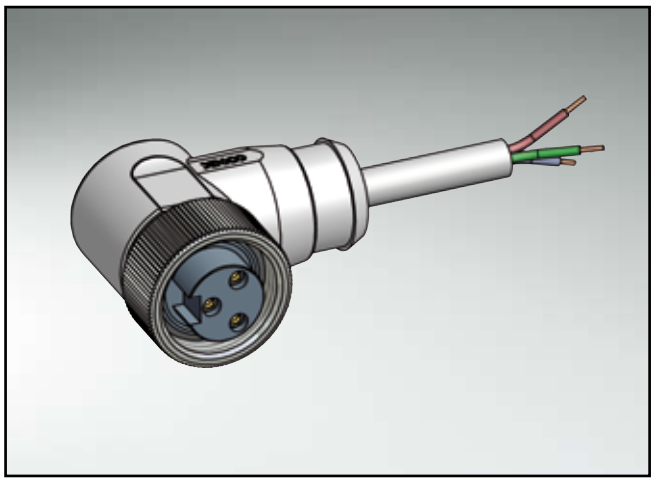

TECHNICAL DATA

Rated voltage	2-pos + GND	4-pos	4-pos + GND
	400V	300V	300V
Current rating	2-pos + GND: 12A at +40°C 4-pos/4-pos + GND: 10A at +40°C		
Pollution degree	3/2		
Insulation resistance	=10^9Ω		
Degree of protection	IP68 in mated condition		
Temperature range	-30°C to +80°C		
Mating cycles	<=100		

Directive 2002 95 EC „RoHS" Compliant

PIN CONFIGURATION

2-pos + Ground

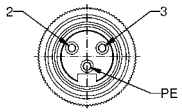

A

4-pos

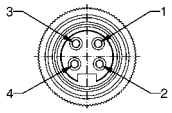

A

4-pos + Ground

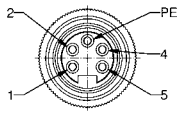

A

CONTACT ASSIGNMENT 2-POS + GROUND

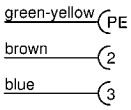

CONTACT ASSIGNMENT 4-POS

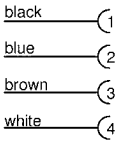

CONTACT ASSIGNMENT 4-POS + GROUND

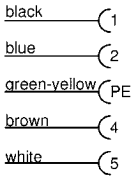

DIMENSION DRAWING

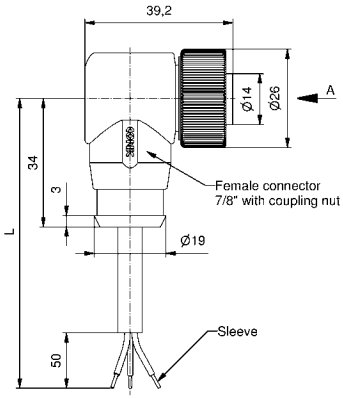

ORDER DATA

Cable	Length/L	Description	2-pos + Ground Part-no.	Description	4-pos Part-no.	Description	4-pos + Ground Part-no.
PVC, UL grey LiYY 1,50mm²	2m	SAL-7/8-RKW2PE-2/A3/150	41-01113	SAL-7/8-RKW4-2/A3/150	41-01145	SAL-7/8-RKW4PE-2/A3/150	41-01177
	3m	SAL-7/8-RKW2PE-3/A3/150	41-01114	SAL-7/8-RKW4-3/A3/150	41-01146	SAL-7/8-RKW4PE-3/A3/150	41-01178
	5m	SAL-7/8-RKW2PE-5/A3/150	41-01115	SAL-7/8-RKW4-5/A3/150	41-01147	SAL-7/8-RKW4PE-5/A3/150	41-01179
	10m	SAL-7/8-RKW2PE-10/A3/150	41-01116	SAL-7/8-RKW4-10/A3/150	41-01148	SAL-7/8-RKW4PE-10/A3/150	41-01180
TPU, high flexible halogenfree, UL black Li9Y11Y 1,50mm²	2m	SAL-7/8-RKW2PE-2/K1/150	41-01117	SAL-7/8-RKW4-2/K1/150	41-01149	SAL-7/8-RKW4PE-2/K1/150	41-01181
	3m	SAL-7/8-RKW2PE-3/K1/150	41-01118	SAL-7/8-RKW4-3/K1/150	41-01150	SAL-7/8-RKW4PE-3/K1/150	41-01182
	5m	SAL-7/8-RKW2PE-5/K1/150	41-01119	SAL-7/8-RKW4-5/K1/150	41-01151	SAL-7/8-RKW4PE-5/K1/150	41-01183
	10m	SAL-7/8-RKW2PE-10/K1/150	41-01120	SAL-7/8-RKW4-10/K1/150	41-01152	SAL-7/8-RKW4PE-10/K1/150	41-01184

For custom length or quality levels contact factory.

SAL 7/8" CONNECTORS

Male connector, angled

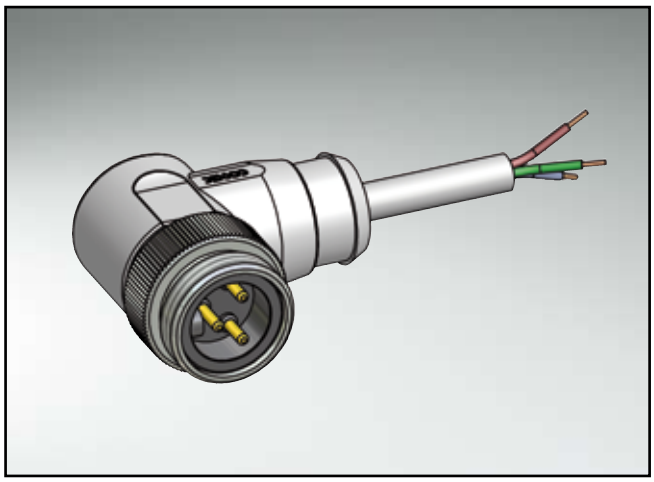

TECHNICAL DATA

Rated voltage	2-pos + GND	4-pos	4-pos + GND
	400V	300V	300V
Current rating	2-pos + GND: 12A at +40°C 4-pos/4-pos + GND: 10A at +40°C		
Pollution degree	3/2		
Insulation resistance	=$10^9\Omega$		
Degree of protection	IP68 in mated condition		
Temperature range	-30°C to +80°C		
Mating cycles	<=100		

Directive 2002 95 EC „RoHS" Compliant

PIN CONFIGURATION

2-pos + Ground

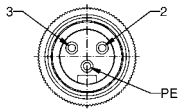

4-pos

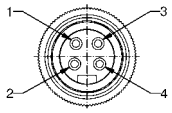

4-pos + Ground

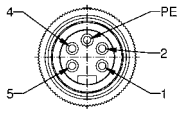

CONTACT ASSIGNMENT 2-POS + GROUND

green-yellow — PE
brown — 2
blue — 3

CONTACT ASSIGNMENT 4-POS

black — 1
blue — 2
brown — 3
white — 4

CONTACT ASSIGNMENT 4-POS + GROUND

black — 1
blue — 2
green-yellow — PE
brown — 4
white — 5

DIMENSION DRAWING

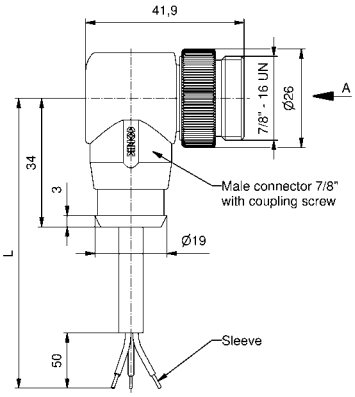

ORDER DATA

Cable	Length/L	Description	2-pos + Ground Part-no.	Description	4-pos Part-no.	Description	4-pos + Ground Part-no.
PVC, UL grey LiYY 1,50mm²	2m	SAL-7/8-RSW2PE-2/A3/150	41-01121	SAL-7/8-RSW4-2/A3/150	41-01153	SAL-7/8-RSW4PE-2/A3/150	41-01185
	3m	SAL-7/8-RSW2PE-3/A3/150	41-01122	SAL-7/8-RSW4-3/A3/150	41-01154	SAL-7/8-RSW4PE-3/A3/150	41-01186
	5m	SAL-7/8-RSW2PE-5/A3/150	41-01123	SAL-7/8-RSW4-5/A3/150	41-01155	SAL-7/8-RSW4PE-5/A3/150	41-01187
	10m	SAL-7/8-RSW2PE-10/A3/150	41-01124	SAL-7/8-RSW4-10/A3/150	41-01156	SAL-7/8-RSW4PE-10/A3/150	41-01188
TPU, high flexible halogenfree, UL black Li9Y11Y 1,50mm²	2m	SAL-7/8-RSW2PE-2/K1/150	41-01125	SAL-7/8-RSW4-2/K1/150	41-01157	SAL-7/8-RSW4PE-2/K1/150	41-01189
	3m	SAL-7/8-RSW2PE-3/K1/150	41-01126	SAL-7/8-RSW4-3/K1/150	41-01158	SAL-7/8-RSW4PE-3/K1/150	41-01190
	5m	SAL-7/8-RSW2PE-5/K1/150	41-01127	SAL-7/8-RSW4-5/K1/150	41-01159	SAL-7/8-RSW4PE-5/K1/150	41-01191
	10m	SAL-7/8-RSW2PE-10/K1/150	41-01128	SAL-7/8-RSW4-10/K1/150	41-01160	SAL-7/8-RSW4PE-10/K1/150	41-01192

For custom length or quality levels contact factory.

SAL 7/8" CONNECTORS

Connecting cable Female connector, axial – Male connector, axial

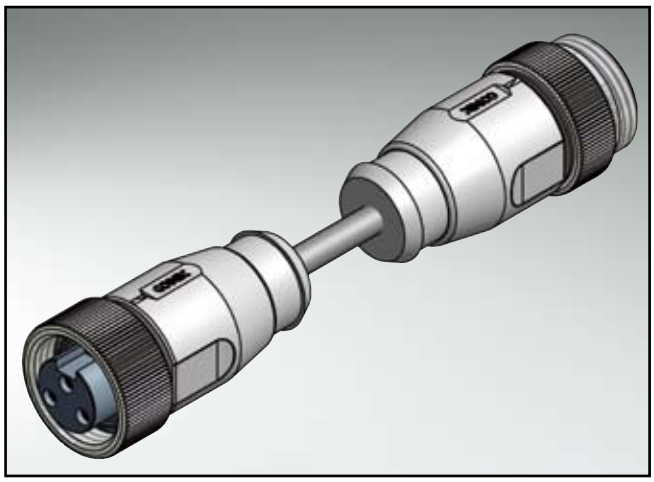

TECHNICAL DATA

Rated voltage	2-pos + Ground	4-pos
	400V	300V
Current rating	8A at +40°C	
Pollution degree	3/2	
Insulation resistance	=$10^9\Omega$	
Degree of protection	IP68 in mated condition	
Temperature range	-30°C to +80°C	
Mating cycles	<=100	

Directive 2002 95 EC
„RoHS"
Compliant

PIN CONFIGURATION

2-pos + Ground female

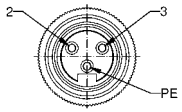

A

4-pos female

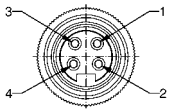

A

2-pos + Ground male

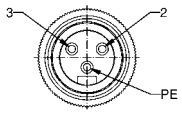

B

4-pos male

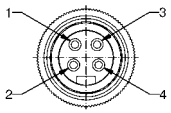

B

CONTACT ASSIGNMENT 2-POS + GROUND

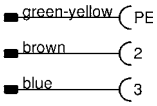

CONTACT ASSIGNMENT 4-POS

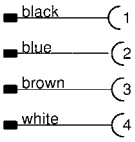

DIMENSION DRAWING

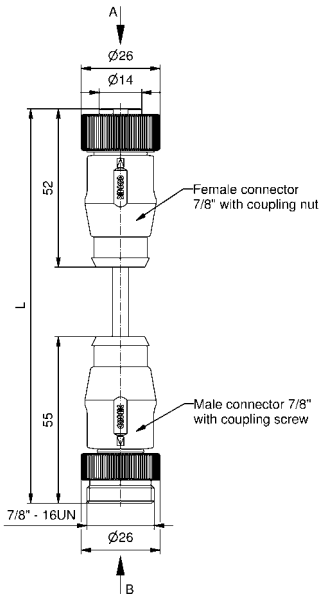

ORDER DATA

Cable	Length/L	Description	2-pos + Ground Part-no.	Description	4-pos Part-no.
PVC, UL grey LiYY 0,75mm²	0,6m	SAL-7/8-RK2PE-RS2PE-0,6/A3	41-01193	SAL-7/8-RK4-RS4-0,6/A3	41-01209
	1,0m	SAL-7/8-RK2PE-RS2PE-1/A3	41-01194	SAL-7/8-RK4-RS4-1/A3	41-01210
	1,5m	SAL-7/8-RK2PE-RS2PE-1,5/A3	41-01195	SAL-7/8-RK4-RS4-1,5/A3	41-01211
	2,0m	SAL-7/8-RK2PE-RS2PE-2/A3	41-01196	SAL-7/8-RK4-RS4-2/A3	41-01212
TPU, high flexible halogenfree, UL black Li9Y11Y 0,75mm²	0,6m	SAL-7/8-RK2PE-RS2PE-0,6/K1	41-01197	SAL-7/8-RK4-RS4-0,6/K1	41-01213
	1,0m	SAL-7/8-RK2PE-RS2PE-1/K1	41-01198	SAL-7/8-RK4-RS4-1/K1	41-01214
	1,5m	SAL-7/8-RK2PE-RS2PE-1,5/K1	41-01199	SAL-7/8-RK4-RS4-1,5/K1	41-01215
	2,0m	SAL-7/8-RK2PE-RS2PE-2/K1	41-01200	SAL-7/8-RK4-RS4-2/K1	41-01216

For custom length or quality levels contact factory.

SAL 7/8" CONNECTORS

Connecting cable Female connector, axial – Male connector, axial

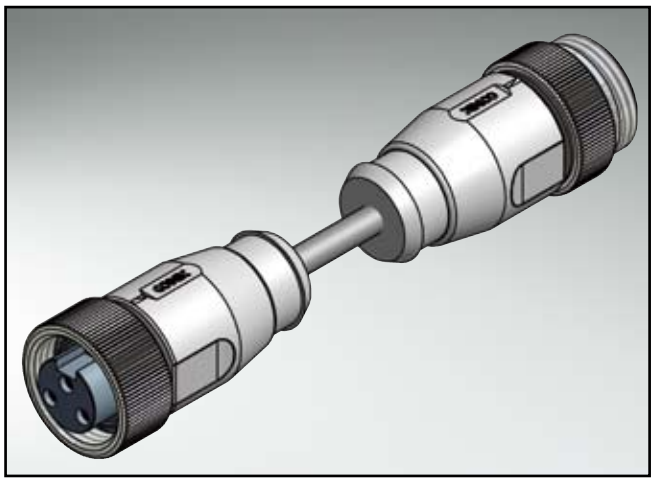

TECHNICAL DATA

Rated voltage	4-pos + Ground / 300V
Current rating	8A at +40°C
Pollution degree	3/2
Insulation resistance	=$10^9\Omega$
Degree of protection	IP68 in mated condition
Temperature range	-30°C to +80°C
Mating cycles	<=100

Directive 2002 95 EC „RoHS" Compliant

PIN CONFIGURATION

4-pos + Ground female

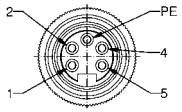

A

4-pos + Ground male

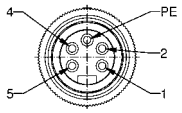

B

CONTACT ASSIGNMENT 4-POS + GROUND

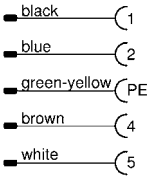

DIMENSION DRAWING

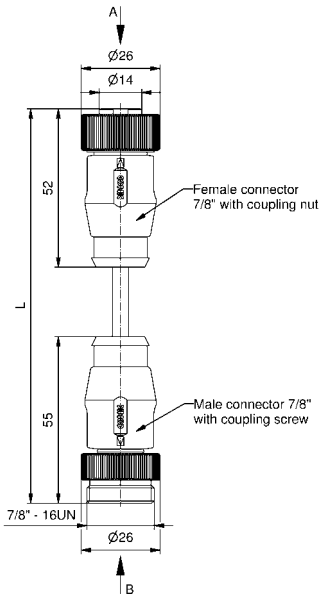

ORDER DATA

Cable	Length/L	Description	4-pos + Ground Part-no.
PVC, UL grey LiYY 0,75mm²	0,6m	SAL-7/8-RK4PE-RS4PE-0,6/A3	41-01225
	1,0m	SAL-7/8-RK4PE-RS4PE-1/A3	41-01226
	1,5m	SAL-7/8-RK4PE-RS4PE-1,5/A3	41-01227
	2,0m	SAL-7/8-RK4PE-RS4PE-2/A3	41-01228
TPU, high flexible halogenfree, UL black Li9Y11Y 0,75mm²	0,6m	SAL-7/8-RK4PE-RS4PE-0,6/K1	41-01229
	1,0m	SAL-7/8-RK4PE-RS4PE-1/K1	41-01230
	1,5m	SAL-7/8-RK4PE-RS4PE-1,5/K1	41-01231
	2,0m	SAL-7/8-RK4PE-RS4PE-2/K1	41-01232

For custom length or quality levels contact factory.

SAL 7/8" CONNECTORS

Connecting cable Female connector, angled – Male connector, axial

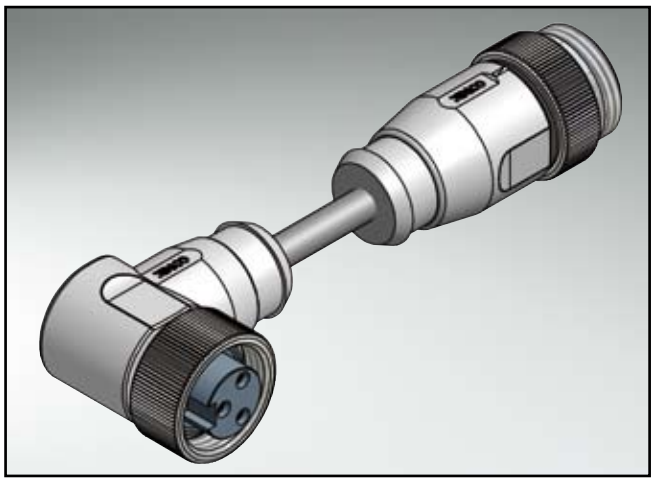

TECHNICAL DATA

	2-pos + Ground	4-pos
Rated voltage	400V	300V
Current rating	8A at +40°C	
Pollution degree	3/2	
Insulation resistance	=$10^9\Omega$	
Degree of protection	IP68 in mated condition	
Temperature range	-30°C to +80°C	
Mating cycles	<=100	

Directive 2002 95 EC
„RoHS"
Compliant

PIN CONFIGURATION

2-pos + Ground female

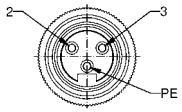

A

4-pos female

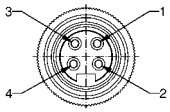

A

2-pos + Ground male

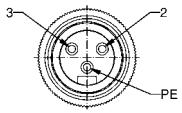

B

4-pos male

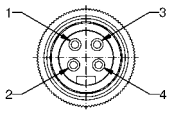

B

CONTACT ASSIGNMENT 2-POS + GROUND

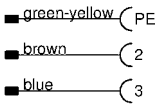

CONTACT ASSIGNMENT 4-POS

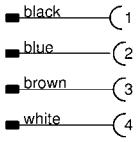

DIMENSION DRAWING

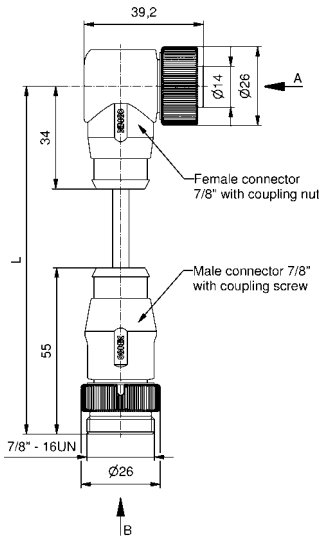

ORDER DATA

Cable	Length/L	Description	2-pos + Ground Part-no.	Description	4-pos Part-no.
PVC, UL grey LiYY 0,75mm²	0,6m	SAL-7/8-RKW2PE-RS2PE-0,6/A3	41-01201	SAL-7/8-RKW4-RS4-0,6/A3	41-01217
	1,0m	SAL-7/8-RKW2PE-RS2PE-1/A3	41-01202	SAL-7/8-RKW4-RS4-1/A3	41-01218
	1,5m	SAL-7/8-RKW2PE-RS2PE-1,5/A3	41-01203	SAL-7/8-RKW4-RS4-1,5/A3	41-01219
	2,0m	SAL-7/8-RKW2PE-RS2PE-2/A3	41-01204	SAL-7/8-RKW4-RS4-2/A3	41-01220
TPU, high flexible halogenfree, UL black Li9Y11Y 0,75mm²	0,6m	SAL-7/8-RKW2PE-RS2PE-0,6/K1	41-01205	SAL-7/8-RKW4-RS4-0,6/K1	41-01221
	1,0m	SAL-7/8-RKW2PE-RS2PE-1/K1	41-01206	SAL-7/8-RKW4-RS4-1/K1	41-01222
	1,5m	SAL-7/8-RKW2PE-RS2PE-1,5/K1	41-01207	SAL-7/8-RKW4-RS4-1,5/K1	41-01223
	2,0m	SAL-7/8-RKW2PE-RS2PE-2/K1	41-01208	SAL-7/8-RKW4-RS4-2/K1	41-01224

For custom length or quality levels contact factory.

SAL 7/8" CONNECTORS

Connecting cable Female connector, angled – Male connector, axial

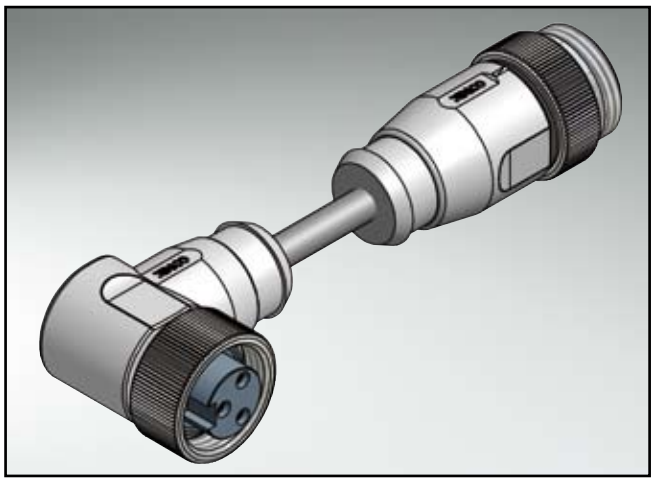

TECHNICAL DATA

Rated voltage	4-pos + Ground / 300V
Current rating	8A at +40°C
Pollution degree	3/2
Insulation resistance	=$10^9\Omega$
Degree of protection	IP68 in mated condition
Temperature range	-30°C to +80°C
Mating cycles	<=100

Directive 2002 95 EC „RoHS" Compliant

PIN CONFIGURATION

4-pos + Ground female

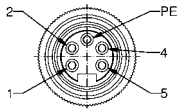

A

4-pos + Ground male

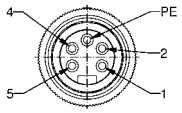

B

CONTACT ASSIGNMENT 4-POS + GROUND

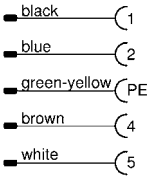

DIMENSION DRAWING

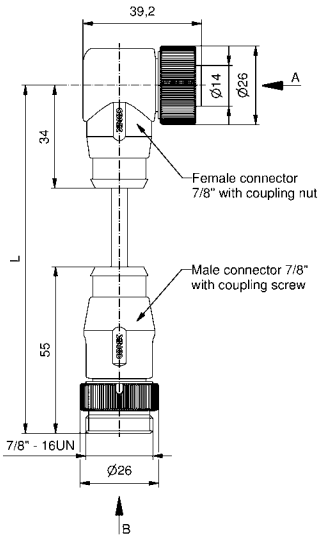

ORDER DATA

Cable	Length/L	Description	4-pos + Ground Part-no.
PVC, UL grey LiYY 0,75mm²	0,6m	SAL-7/8-RKW4PE-RS4PE-0,6/A3	41-01233
	1,0m	SAL-7/8-RKW4PE-RS4PE-1/A3	41-01234
	1,5m	SAL-7/8-RKW4PE-RS4PE-1,5/A3	41-01235
	2,0m	SAL-7/8-RKW4PE-RS4PE-2/A3	41-01236
TPU, high flexible halogenfree, UL black Li9Y11Y 0,75mm²	0,6m	SAL-7/8-RKW4PE-RS4PE-0,6/K1	41-01237
	1,0m	SAL-7/8-RKW4PE-RS4PE-1/K1	41-01238
	1,5m	SAL-7/8-RKW4PE-RS4PE-1,5/K1	41-01239
	2,0m	SAL-7/8-RKW4PE-RS4PE-2/K1	41-01240

For custom length or quality levels contact factory.

SAL 7/8" CONNECTORS

Connecting cable Female connector, axial – Male connector, axial

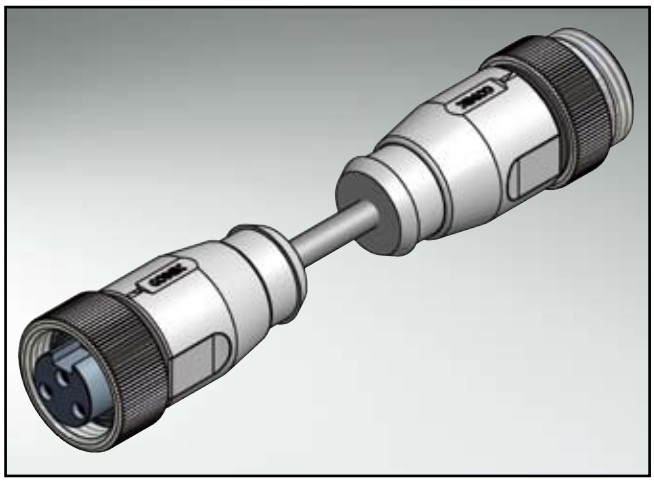

TECHNICAL DATA

Rated voltage	2-pos + Ground: 400V; 4-pos: 300V
Current rating	2-pos + Ground: 12A at +40°C 4-pos: 10A at +40°C
Pollution degree	3/2
Insulation resistance	=$10^9\Omega$
Degree of protection	IP68 in mated condition
Temperature range	-30°C to +80°C
Mating cycles	<=100

Directive 2002 95 EC „RoHS" Compliant

PIN CONFIGURATION

2-pos + Ground female

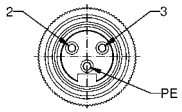

A

4-pos female

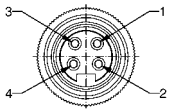

A

2-pos + Ground male

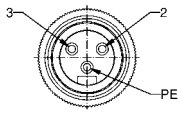

B

4-pos male

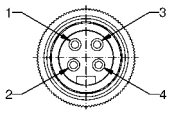

B

CONTACT ASSIGNMENT 2-POS + GROUND

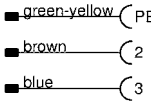

CONTACT ASSIGNMENT 4-POS

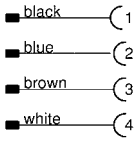

DIMENSION DRAWING

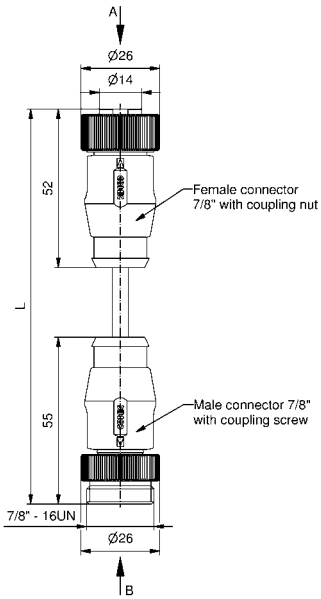

ORDER DATA

Cable	Length/L	Description	2-pos + Ground Part-no.	Description	4-pos Part-no.
PVC, UL grey LiYY 1,50mm²	0,6m	SAL-7/8-RK2PE-RS2PE-0,6/A3/150	41-01241	SAL-7/8-RK4-RS4-0,6/A3/150	41-01257
	1,0m	SAL-7/8-RK2PE-RS2PE-1/A3/150	41-01242	SAL-7/8-RK4-RS4-1/A3/150	41-01258
	1,5m	SAL-7/8-RK2PE-RS2PE-1,5/A3/150	41-01243	SAL-7/8-RK4-RS4-1,5/A3/150	41-01259
	2,0m	SAL-7/8-RK2PE-RS2PE-2/A3/150	41-01244	SAL-7/8-RK4-RS4-2/A3/150	41-01260
TPU, high flexible halogenfree, UL black Li9Y11Y 1,50mm²	0,6m	SAL-7/8-RK2PE-RS2PE-0,6/K1/150	41-01245	SAL-7/8-RK4-RS4-0,6/K1/150	41-01261
	1,0m	SAL-7/8-RK2PE-RS2PE-1/K1/150	41-01246	SAL-7/8-RK4-RS4-1/K1/150	41-01262
	1,5m	SAL-7/8-RK2PE-RS2PE-1,5/K1/150	41-01247	SAL-7/8-RK4-RS4-1,5/K1/150	41-01263
	2,0m	SAL-7/8-RK2PE-RS2PE-2/K1/150	41-01248	SAL-7/8-RK4-RS4-2/K1/150	41-01264

For custom length or quality levels contact factory.

SAL 7/8" CONNECTORS

Connecting cable Female connector, axial – Male connector, axial

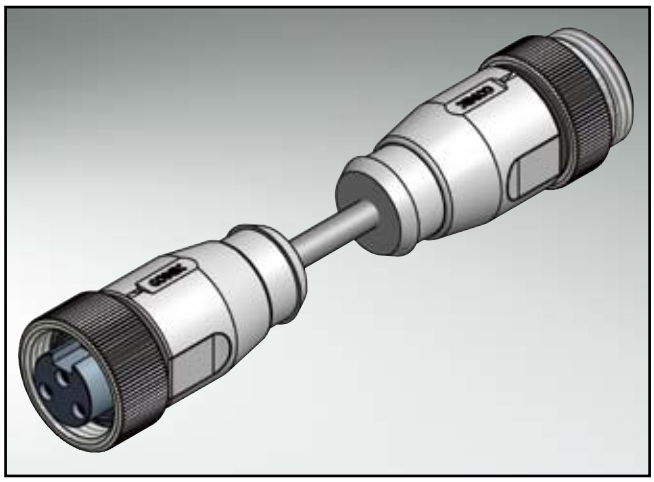

TECHNICAL DATA

Rated voltage	4-pos + Ground / 300V
Current rating	10A at +40°C
Pollution degree	3/2
Insulation resistance	=$10^9\Omega$
Degree of protection	IP68 in mated condition
Temperature range	-30°C to +80°C
Mating cycles	<=100

Directive 2002 95 EC „RoHS" Compliant

PIN CONFIGURATION

4-pos + Ground female

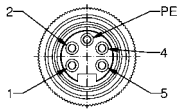

A

4-pos + Ground male

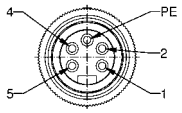

B

CONTACT ASSIGNMENT 4-POS + GROUND

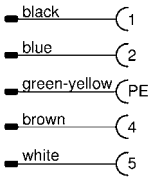

DIMENSION DRAWING

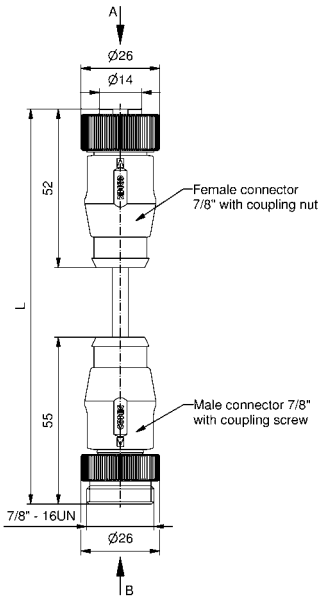

ORDER DATA

Cable	Length/L	Description	4-pos + Ground Part-no.
PVC, UL grey LiYY 1,50mm²	0,6m	SAL-7/8-RK4PE-RS4PE-0,6/A3/150	41-01273
	1,0m	SAL-7/8-RK4PE-RS4PE-1/A3/150	41-01274
	1,5m	SAL-7/8-RK4PE-RS4PE-1,5/A3/150	41-01275
	2,0m	SAL-7/8-RK4PE-RS4PE-2/A3/150	41-01276
TPU, high flexible halogenfree, UL black Li9Y11Y 1,50mm²	0,6m	SAL-7/8-RK4PE-RS4PE-0,6/K1/150	41-01277
	1,0m	SAL-7/8-RK4PE-RS4PE-1/K1/150	41-01278
	1,5m	SAL-7/8-RK4PE-RS4PE-1,5/K1/150	41-01279
	2,0m	SAL-7/8-RK4PE-RS4PE-2/K1/150	41-01280

For custom length or quality levels contact factory.

SAL 7/8" CONNECTORS

Connecting cable Female connector, angled – Male connector, axial

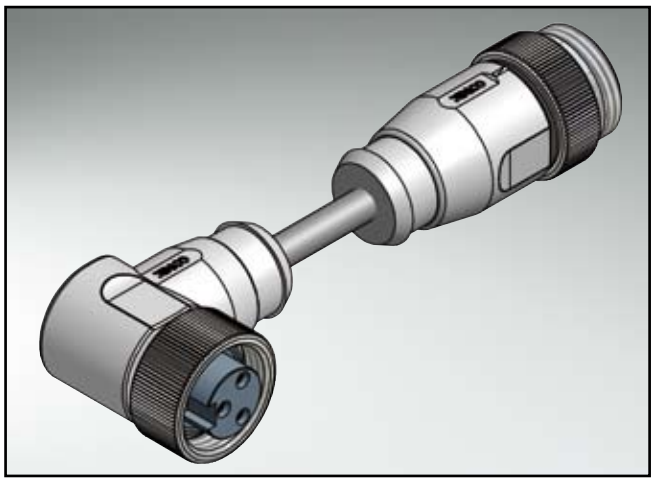

TECHNICAL DATA

Rated voltage	2-pos + Ground: 400V; 4-pos: 300V
Current rating	2-pos + GND: 12A at +40°C 4-pos: 10A at +40°C
Pollution degree	3/2
Insulation resistance	=$10^9\Omega$
Degree of protection	IP68 in mated condition
Temperature range	-30°C to +80°C
Mating cycles	<=100

Directive 2002 95 EC „RoHS" Compliant

PIN CONFIGURATION

2-pos + Ground female

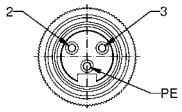

A

4-pos female

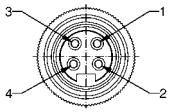

A

2-pos + Ground male

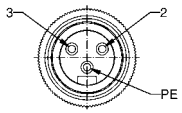

B

4-pos male

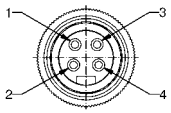

B

CONTACT ASSIGNMENT 2-POS + GROUND

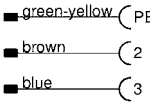

CONTACT ASSIGNMENT 4-POS

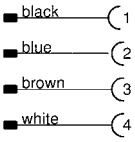

DIMENSION DRAWING

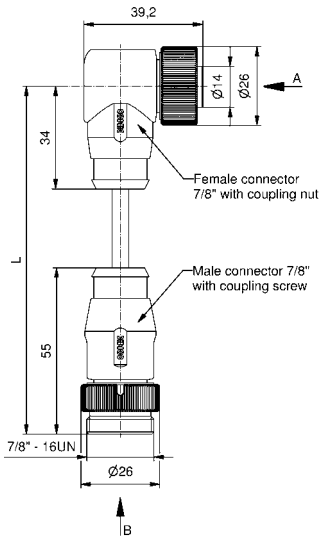

ORDER DATA

Cable	Length/L	Description	2-pos + Ground Part-no.	Description	4-pos Part-no.
PVC, UL grey LiYY 1,50mm²	0,6m	SAL-7/8-RKW2PE-RS2PE-0,6/A3/150	41-01249	SAL-7/8-RKW4-RS4-0,6/A3/150	41-01265
	1,0m	SAL-7/8-RKW2PE-RS2PE-1/A3/150	41-01250	SAL-7/8-RKW4-RS4-1/A3/150	41-01266
	1,5m	SAL-7/8-RKW2PE-RS2PE-1,5/A3/150	41-01251	SAL-7/8-RKW4-RS4-1,5/A3/150	41-01267
	2,0m	SAL-7/8-RKW2PE-RS2PE-2/A3/150	41-01252	SAL-7/8-RKW4-RS4-2/A3/150	41-01268
TPU, high flexible halogenfree, UL black Li9Y11Y 1,50mm²	0,6m	SAL-7/8-RKW2PE-RS2PE-0,6/K1/150	41-01253	SAL-7/8-RKW4-RS4-0,6/K1/150	41-01269
	1,0m	SAL-7/8-RKW2PE-RS2PE-1/K1/150	41-01254	SAL-7/8-RKW4-RS4-1/K1/150	41-01270
	1,5m	SAL-7/8-RKW2PE-RS2PE-1,5/K1/150	41-01255	SAL-7/8-RKW4-RS4-1,5/K1/150	41-01271
	2,0m	SAL-7/8-RKW2PE-RS2PE-2/K1/150	41-01256	SAL-7/8-RKW4-RS4-2/K1/150	41-01272

For custom length or quality levels contact factory.

SAL 7/8" CONNECTORS

Connecting cable Female connector, angled – Male connector, axial

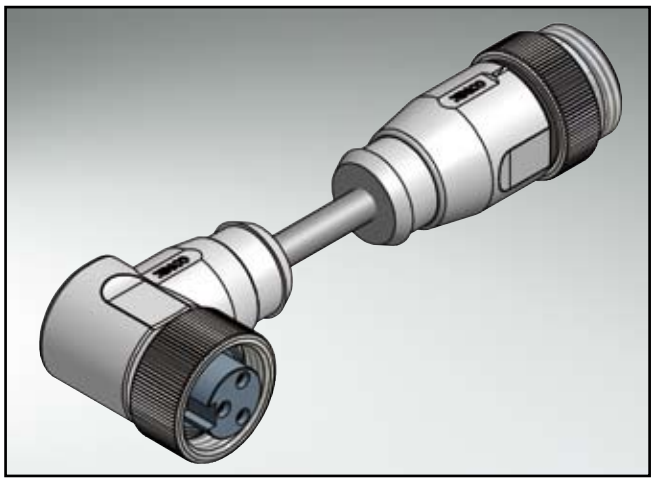

TECHNICAL DATA

Rated voltage	4-pos + Ground / 300V
Current rating	10A at +40°C
Pollution degree	3/2
Insulation resistance	=$10^9\Omega$
Degree of protection	IP68 in mated condition
Temperature range	-30°C to +80°C
Mating cycles	<=100

Directive 2002 95 EC „RoHS" Compliant

PIN CONFIGURATION

4-pos + Ground female

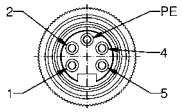

A

4-pos + Ground male

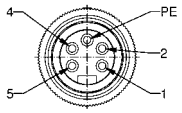

B

CONTACT ASSIGNMENT 4-POS + GROUND

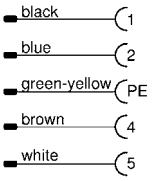

DIMENSION DRAWING

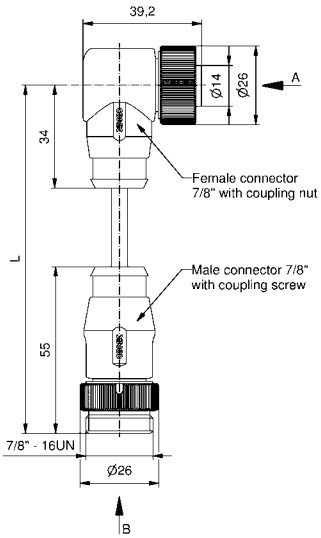

ORDER DATA

Cable	Length/L	Description	4-pos + Ground Part-no.
PVC, UL grey LiYY 1,50mm²	0,6m	SAL-7/8-RKW4PE-RS4PE-0,6/A3/150	41-01281
	1,0m	SAL-7/8-RKW4PE-RS4PE-1/A3/150	41-01282
	1,5m	SAL-7/8-RKW4PE-RS4PE-1,5/A3/150	41-01283
	2,0m	SAL-7/8-RKW4PE-RS4PE-2/A3/150	41-01284
TPU, high flexible halogenfree, UL black Li9Y11Y 1,50mm²	0,6m	SAL-7/8-RKW4PE-RS4PE-0,6/K1/150	41-01285
	1,0m	SAL-7/8-RKW4PE-RS4PE-1/K1/150	41-01286
	1,5m	SAL-7/8-RKW4PE-RS4PE-1,5/K1/150	41-01287
	2,0m	SAL-7/8-RKW4PE-RS4PE-2/K1/150	41-01288

For custom length or quality levels contact factory.

SAL 7/8" CONNECTORS

Female connector, axial, field-attachable with screw-termination

TECHNICAL DATA

Rated voltage	2-pos + GND 250V; 4-pos 250V; 4-pos + GND 250V
Current rating	2-pos + GND: 12A at +40°C 4-pos/4-pos + GND: 9A at +40°C
Pollution degree	3/2
Insulation resistance	=10^9Ω
Degree of protection	IP68 in mated condition
Temperature range	-30°C to +85°C
Mating cycles	<=100

Directive 2002 95 EC „RoHS" Compliant

PIN CONFIGURATION

2-pos + Ground

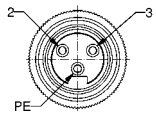

4-pos

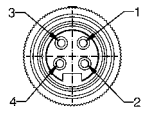

4-pos + Ground

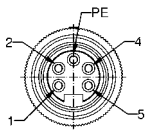

DIMENSION DRAWING

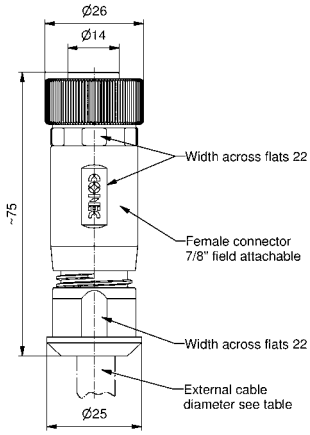

ORDER DATA

Cable outer diameter	Description	2-pos + Ground Part-no.	Description	4-pos Part-no.	Description	4-pos + Ground Part-no.
max. Ø6-8mm max. Ø8-10mm max. Ø10-12mm	SAL-7/8-RKC2PE-S	41-00001	SAL-7/8-RKC4-S	41-00002	SAL-7/8-RKC4PE-S	41-00003

SAL 7/8" CONNECTORS

Male connector, axial, field-attachable with screw-termination

TECHNICAL DATA

	2-pos + GND	4-pos	4-pos + GND
Rated voltage	250V	250V	250V
Current rating	2-pos + GND: 12A at +40°C 4-pos/4-pos + GND: 9A at +40°C		
Pollution degree	3/2		
Insulation resistance	$=10^9\Omega$		
Degree of protection	IP68 in mated condition		
Temperature range	-30°C to +85°C		
Mating cycles	<=100		

Directive 2002 95 EC „RoHS" Compliant

PIN CONFIGURATION

2-pos + Ground

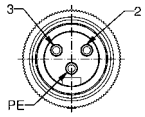

4-pos

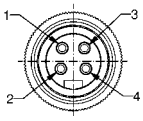

4-pos + Ground

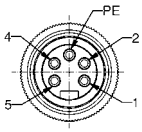

DIMENSION DRAWING

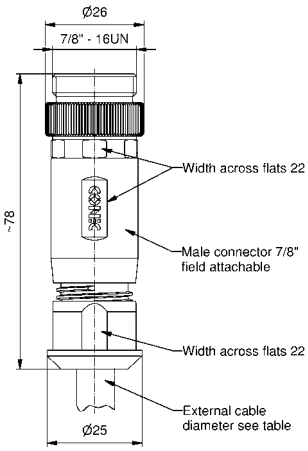

ORDER DATA

Cable outer diameter	Description	2-pos + Ground Part-no.	Description	4-pos Part-no.	Description	4-pos + Ground Part-no.
max. Ø6-8mm max. Ø8-10mm max. Ø10-12mm	SAL-7/8-RSC2PE-S	41-00004	SAL-7/8-RSC4-S	41-00005	SAL-7/8-RSC4PE-S	41-00006

Section 9
Rund24 Connectors

Rund24 connectors are part of a universal connector system with a plastic locking device for the transmission of higher currents and voltages. The use of high quality thermoplastic with special properties such as stiffness, impact resistance and high flammability resistance as well as a screw concept with a self-locking feature (anti-vibration locking) enables this product to be used in rough and robust environments.

This connector family has both an overmoulded version as well as a field attachable version.

SAL Rund24 Connectors overmoulded

Nomenclature

S A L - 2 4 - R K W 3 P E - 2 / A 3

SAL
Sensor Actor Line

Installation size
24 = Rund24

Building
R = Circular connector

Configuration
K = Female connector
S = Male connector

Building
= Axial
W = Angled

Number of poles
3PE = 3-pos + Ground

Cable length
XX = Length [m]

Cable quality
A3 = PVC, grey, UL

SAL Rund24 Connectors overmoulded

Technical Data

Basic material	
Contact	CuZn
Contact plating	Nickel plated, gold-plated
Contact carrier	PA6 GF, UL 94
Moulding body	TPU, UL 94
Sealing	FPM
Coupling nut/-srew	PA GF, UL 94

Information on the following pages are basing on below mentioned IEC-standards.

Rated voltage	IEC 60664-1
Current rating	IEC 60512-3
Insulation resistance	IEC 60512-2
Pollution degree	IEC 60664-1
Degree of protection	IEC 60529
Temperature range	IEC 60664-1
Mating cycles	IEC 60512-9a

Technical subject to change without notice.

SAL Rund24 Connectors field-attachable

Nomenclature

S A L - 2 4 - R K C 3 P E - S

SAL
Sensor Actor Line

Installation size
24 = Rund24

Building
R = Circular connector

Configuration
K = Female connector
S = Male connector

Building
C = Field-attachable

Number of poles
3PE = 3-pos + Ground

Type of connection
S = Screw-termination

SAL Rund24 Connectors field-attachable

Technical Data

Basic material	
Contact	CuZn
Contact plating	Nickel plated, gold-plated
Contact carrier	PA6 GF, UL 94
Housing	PA6 GF, UL 94
Cable sealing	Elastomere
Sealing	FPM
Coupling nut/-srew	PA GF, UL 94

Information on the following pages are basing on below mentioned IEC-standards.

Rated voltage	IEC 60664-1
Current rating	IEC 60512-3
Insulation resistance	IEC 60512-2
Pollution degree	IEC 60664-1
Degree of protection	IEC 60529
Temperature range	IEC 60664-1
Mating cycles	IEC 60512-9a

Technical subject to change without notice.

SAL RUND24 CONNECTORS

Female connector, axial

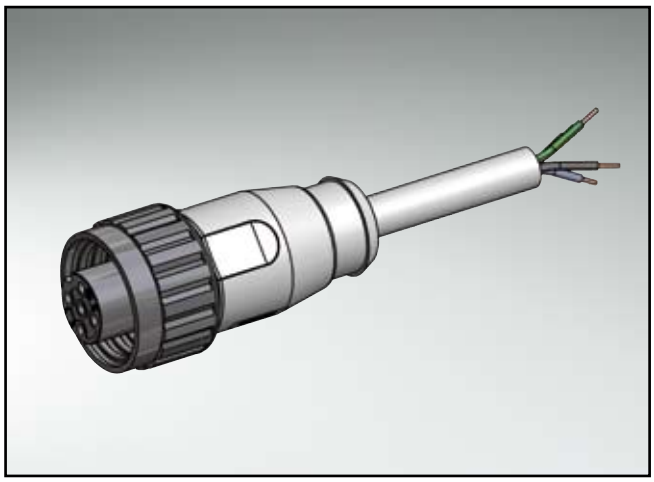

TECHNICAL DATA

Rated voltage	3-pos + Ground 400V
Current rating	13A at +40°C
Pollution degree	3/2
Insulation resistance	=$10^9\Omega$
Degree of protection	IP67 in mated condition
Temperature range	-30°C to +80°C
Mating cycles	<=100

Directive 2002 95 EC
„RoHS"
Compliant

PIN CONFIGURATION

3-pos + Ground

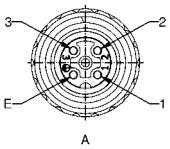

CONTACT ASSIGNMENT 3-POS + GROUND

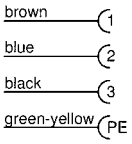

DIMENSION DRAWING

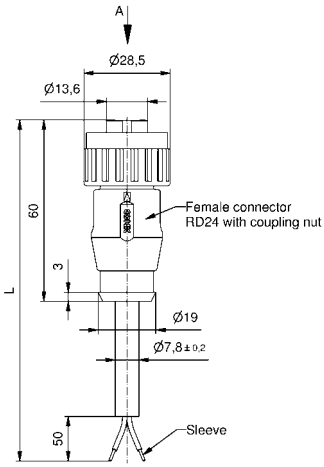

ORDER DATA

Cable	Length/L	Description	3-pos + Ground Part-no.
PVC, UL grey LiYY 1,5mm²	2,0m	SAL-24-RK3PE-2/A3	41-51000
	3,0m	SAL-24-RK3PE-3/A3	41-51001
	5,0m	SAL-24-RK3PE-5/A3	41-51002
	10,0m	SAL-24-RK3PE-10/A3	41-51003

Andere Lengthn and Leitungsaufbauten auf Anfrage

SAL RUND24 CONNECTORS

Male connector, axial

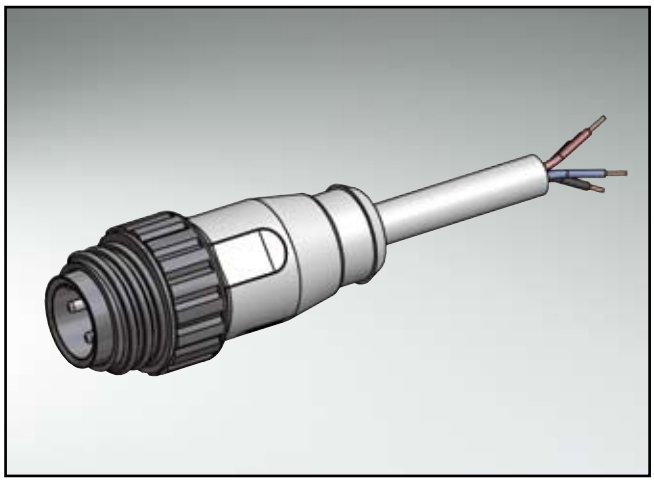

TECHNICAL DATA

Rated voltage	3-pos + Ground 400V
Current rating	13A at +40°C
Pollution degree	3/2
Insulation resistance	=$10^9\Omega$
Degree of protection	IP67 in mated condition
Temperature range	-30°C to +80°C
Mating cycles	<=100

Directive 2002 95 EC
„RoHS"
Compliant

PIN CONFIGURATION

3-pos + Ground

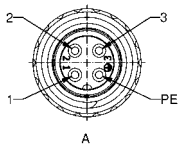

CONTACT ASSIGNMENT 3-POS + GROUND

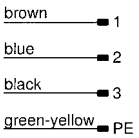

DIMENSION DRAWING

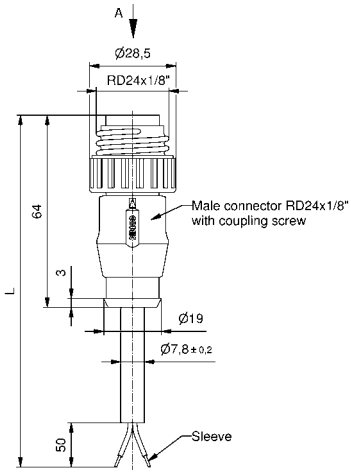

ORDER DATA

Cable	Length/L	Description	3-pos + Ground Part-no.
PVC, UL grey LiYY 1,5mm²	2,0m	SAL-24-RS3PE-2/A3	41-51004
	3,0m	SAL-24-RS3PE-3/A3	41-51005
	5,0m	SAL-24-RS3PE-5/A3	41-51006
	10,0m	SAL-24-RS3PE-10/A3	41-51007

For custom length or quality levels contact factory.

SAL Rund24 Connectors

Female connector, angled

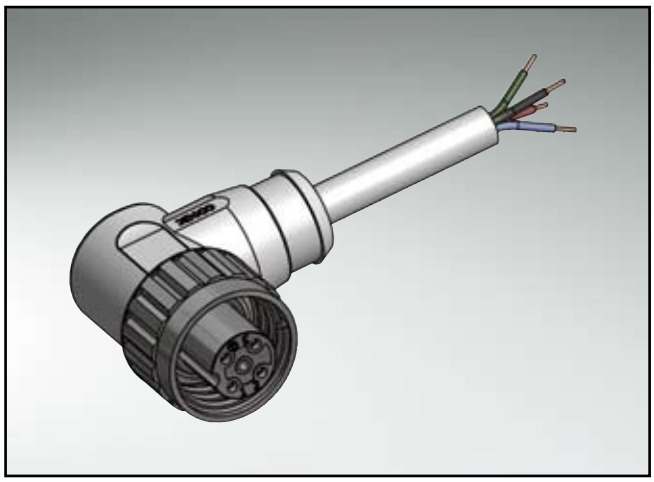

Technical Data

Rated voltage	3-pos + Ground 400V
Current rating	13A at +40°C
Pollution degree	3/2
Insulation resistance	=10⁹Ω
Degree of protection	IP67 in mated condition
Temperature range	-30°C to +80°C
Mating cycles	<=100

Directive 2002 95 EC „RoHS" Compliant

Pin configuration

3-pos + Ground

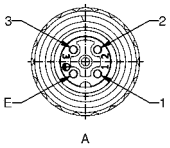

Contact assignment 3-pos + Ground

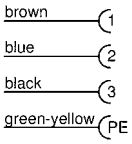

Dimension drawing

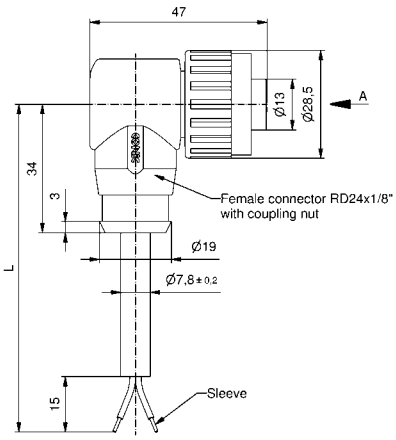

Order data

Cable	Length/L	Description	3-pos + Ground Part-no.
PVC, UL grey LiYY 1,5mm²	2,0m	SAL-24-RKW3PE-2/A3	41-51008
	3,0m	SAL-24-RKW3PE-3/A3	41-51009
	5,0m	SAL-24-RKW3PE-5/A3	41-51010
	10,0m	SAL-24-RKW3PE-10/A3	41-51011

Andere Lengthn and Leitungsaufbauten auf Anfrage

SAL RUND24 CONNECTORS

Male connector, angled

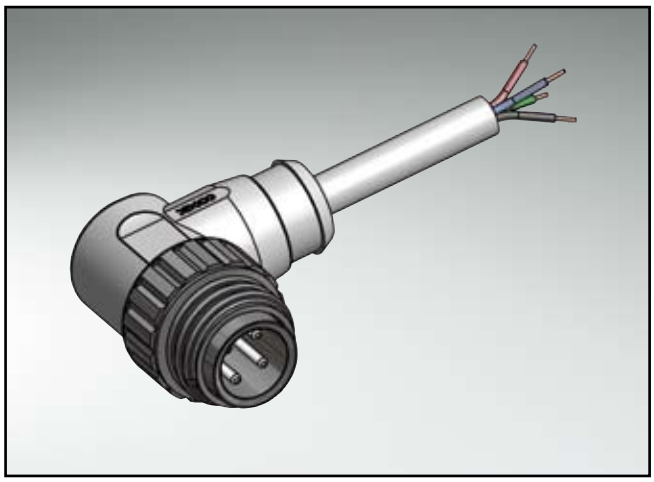

TECHNICAL DATA

Rated voltage	3-pos + Ground 400V
Current rating	13A at +40°C
Pollution degree	3/2
Insulation resistance	=$10^9\Omega$
Degree of protection	IP67 in mated condition
Temperature range	-30°C to +80°C
Mating cycles	<=100

Directive 2002 95 EC
„RoHS"
Compliant

PIN CONFIGURATION

3-pos + Ground

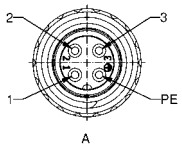

CONTACT ASSIGNMENT 3-POS + GROUND

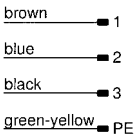

DIMENSION DRAWING

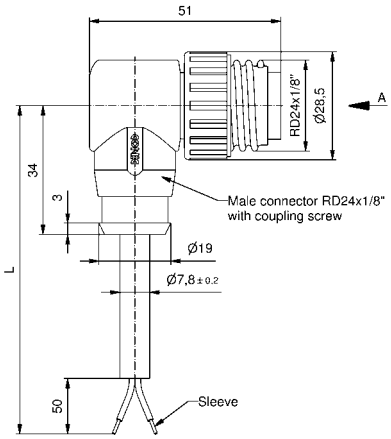

ORDER DATA

Cable	Length/L	Description	3-pos + Ground Part-no.
PVC, UL grey LiYY 1,5mm²	2,0m	SAL-24-RSW3PE-2/A3	41-51012
	3,0m	SAL-24-RSW3PE-3/A3	41-51013
	5,0m	SAL-24-RSW3PE-5/A3	41-51014
	10,0m	SAL-24-RSW3PE-10/A3	41-51015

For custom length or quality levels contact factory.

SAL Rund24 Connectors

Female connector, axial, field-attachable with screw-termination

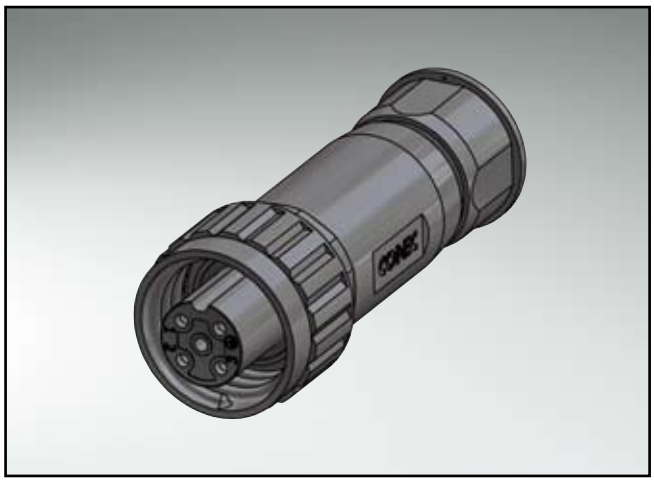

Technical Data

Rated voltage	3-pos + Ground 400V
Current rating	16A at +40°C
Pollution degree	3/2
Insulation resistance	=$10^9\Omega$
Degree of protection	IP67 in mated condition
Temperature range	-40°C to +85°C
Mating cycles	<=100

Directive 2002 95 EC
„RoHS"
Compliant

Pin configuration

3-pos + Ground

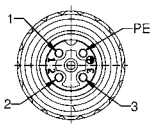

Dimension drawing

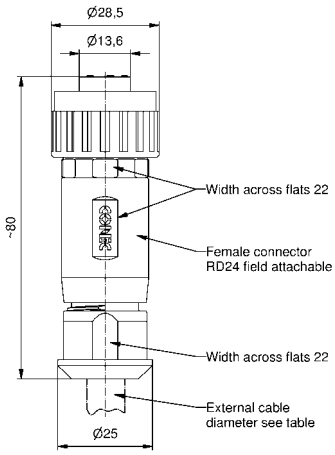

Order data

Cable outer diameter	Description	3-pos + Ground Part-no.
max. Ø6-8mm max. Ø8-10mm max. Ø10-12mm	SAL-24-RKC3PE-S	41-50000

SAL RUND24 CONNECTORS

Male connector, axial, field-attachable with screw-termination

TECHNICAL DATA

Rated voltage	3-pos + Ground 400V
Current rating	16A at +40°C
Pollution degree	3/2
Insulation resistance	=$10^9\Omega$
Degree of protection	IP67 in mated condition
Temperature range	-40°C to +85°C
Mating cycles	<=100

Directive 2002 95 EC
„RoHS"
Compliant

PIN CONFIGURATION

3-pos + Ground

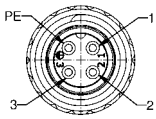

DIMENSION DRAWING

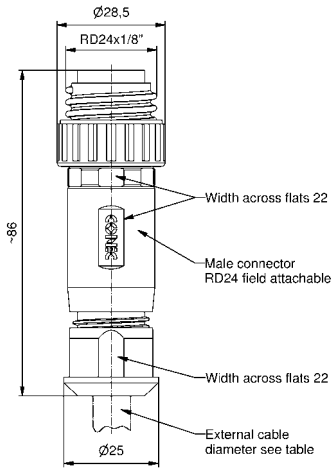

ORDER DATA

Cable outer diameter	Description	3-pos + Ground Part-no.
max. Ø6-8mm max. Ø8-10mm max. Ø10-12mm	SAL-24-RSC3PE-S	41-50002

Section 10
Valveplugs

Valve connectors are a compact and very robust connection solution for the secure transmission of voltages and current for pneumatic, hydraulic and electromagnetic actuators.

Five different designs – A, B, B-Industry, C contact distance 8mm and C contact distance 9.4mm – are available that meet EN 175301-803 specifications. You can choose from versions with an integrated protective circuit to reduce voltage spikes and/or an LED function display for quick error diagnosis. Versions are also available without the integrated protective circuit.

VALVEPLUGS

Nomenclature

S A L - A - V 2 P E G - 0 - 0 2 2 0 - 2 / K 1 / 075

SAL
Sensor Actor Line

Installation size
A = Type A
B = Type B
BI = Type B, Industry
C8 = Type C, Contact distance 8mm
C9 = Type C, Contact distance 9,4mm

Building
V = Valveplugs

Number of poles
2PE = 2-pos + Ground

Building
= Ground, not jumpered
G = Ground, jumpered

0 = Ground 0°
180 = Ground turned180°

0 = Without protection circuit
1 = Protection circuit Varistor/LED Bipolar

24 = 24 AC/DC
220 = 220 AC/DC

Cable length
xx = Length (m)

Cable quality
A2 = PVC, black
A3 = PVC, grey, UL
H2 = PUR/PVC, black
K1 = TPU, black, UL

Wire cross-section
= 3x0,5mm²
075 = 3x0,75mm²

VALVEPLUGS

Technical Data

BASIC MATERIAL	
Contact	CuSn
Contact plating	Nickel plated, gold-plated
Contact carrier	PA GF, UL 94
Moulding body without protection circuit	TPU, UL 94 black
Moulding body without protection circuit	TPU, UL 94 transparent

Information on the following pages are basing on below mentioned IEC-standards.

Current rating	IEC 60512-5-2 5b
Pollution degree	IEC 60664-1
Degree of protection	IEC 60529
Temperature range	IEC 60664-1
Mating cycles	IEC 175301-803

Technical subject to change without notice.

VALVEPLUGS CONFIGURATION A, WITH OVERMOULDED CABLE

2-pos + ground, ground jumpered, without protection circuit

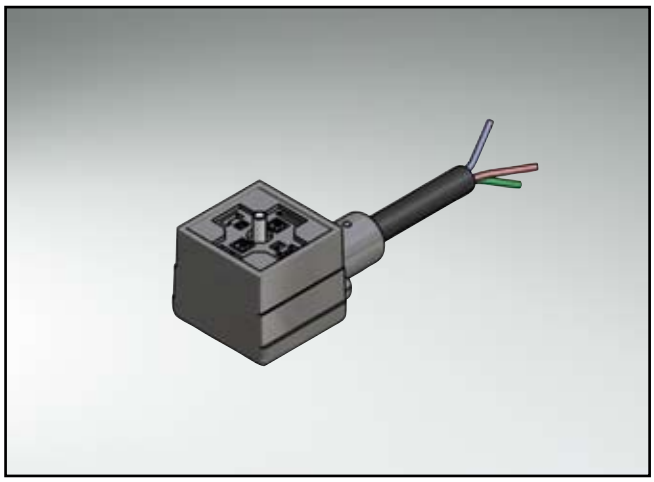

TECHNICAL DATA

Rated voltage	230 AC / DC
Current rating	4A at +40°C
Pollution degree	3
Degree of protection	IP67 in mated condition
Temperature range	-25°C to +80°C
Mating cycles	> 50

Directive 2002 95 EC „RoHS" Compliant

PIN CONFIGURATION

2-pos + Ground

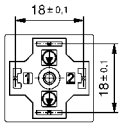

CONTACT ASSIGNMENT 2-POS + GROUND

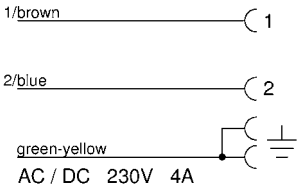

DIMENSION DRAWING

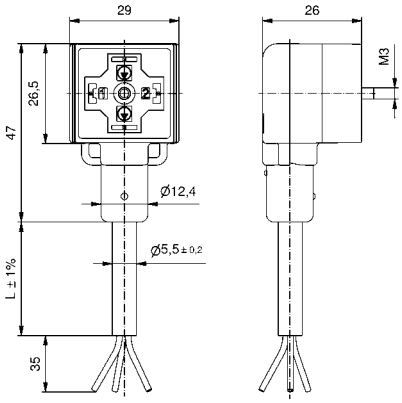

ORDER DATA

Cable	Length/L	Description	2-pos + Ground Part-no.
PVC, black LiYY 3x0,5mm²	2m	SAL-A-V2PEG-0-0220-2/A2	55-00079
	3m	SAL-A-V2PEG-0-0220-3/A2	55-00064
	5m	SAL-A-V2PEG-0-0220-5/A2	55-00065
	10m	SAL-A-V2PEG-0-0220-10/A2	55-00080
PUR/PVC black LiYY11Y 3x0,5mm²	2m	SAL-A-V2PEG-0-0220-2/H2	55-00045
	3m	SAL-A-V2PEG-0-0220-3/H2	55-00000
	5m	SAL-A-V2PEG-0-0220-5/H2	55-00001
	10m	SAL-A-V2PEG-0-0220-10/H2	55-00072

For custom length or quality levels contact factory.

Cable	Length/L	Description	2-pos + Ground Part-no.
PVC, UL, grey LiYY 3x0,75mm²	2m	SAL-A-V2PEG-0-0220-2/A3/075	55-00089
	3m	SAL-A-V2PEG-0-0220-3/A3/075	55-00090
	5m	SAL-A-V2PEG-0-0220-5/A3/075	55-00091
	10m	SAL-A-V2PEG-0-0220-10/A3/075	55-00092
TPU, UL, black Li9Y11Y, 3x0,75mm²	2m	SAL-A-V2PEG-0-0220-2/K1/075	55-00085
	3m	SAL-A-V2PEG-0-0220-3/K1/075	55-00086
	5m	SAL-A-V2PEG-0-0220-5/K1/075	55-00087
	10m	SAL-A-V2PEG-0-0220-10/K1/075	55-00088

For custom length or quality levels contact factory.

VALVEPLUGS CONFIGURATION A, WITH OVERMOULDED CABLE

2-pos + ground, ground jumpered, with protection circuit

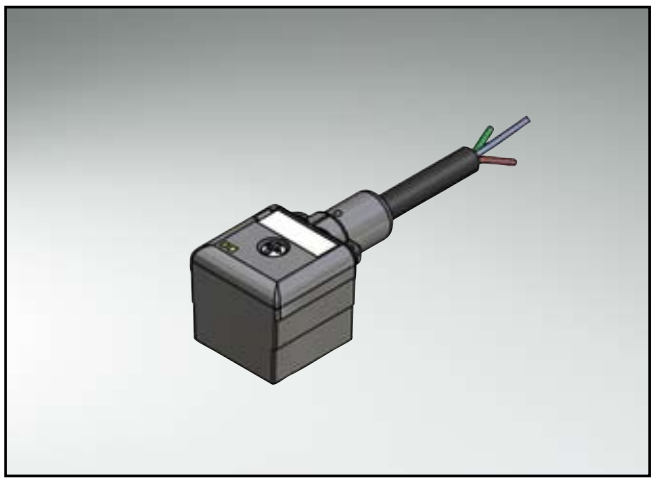

TECHNICAL DATA

Rated voltage	24 AC / DC
Current rating	4A at +40°C
Pollution degree	3
Degree of protection	IP67 in mated condition
Temperature range	-25°C to +80°C
Mating cycles	> 50

Directive 2002 95 EC „RoHS" Compliant

PIN CONFIGURATION

2-pos + Ground

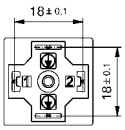

CONTACT ASSIGNMENT 2-POS + GROUND

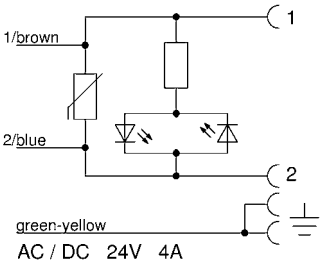

DIMENSION DRAWING

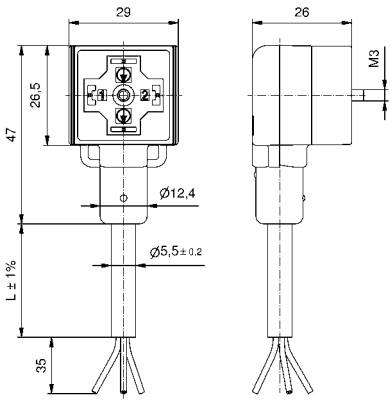

ORDER DATA

Cable	Length/L	Description	2-pos + Ground Part-no.
PVC, black LiYY 3x0,5mm²	2m	SAL-A-V2PEG-0-124-2/A2	55-00082
	3m	SAL-A-V2PEG-0-124-3/A2	55-00083
	5m	SAL-A-V2PEG-0-124-5/A2	55-00048
	10m	SAL-A-V2PEG-0-124-10/A2	55-00084
PUR/PVC black LiYY11Y 3x0,5mm²	2m	SAL-A-V2PEG-0-124-2/H2	55-00081
	3m	SAL-A-V2PEG-0-124-3/H2	55-00004
	5m	SAL-A-V2PEG-0-124-5/H2	55-00005
	10m	SAL-A-V2PEG-0-124-10/H2	55-00039

For custom length or quality levels contact factory.

Cable	Length/L	Description	2-pos + Ground Part-no.
PVC, UL, grey LiYY 3x0,75mm²	2m	SAL-A-V2PEG-0-124-2/A3/075	55-00095
	3m	SAL-A-V2PEG-0-124-3/A3/075	55-00096
	5m	SAL-A-V2PEG-0-124-5/A3/075	55-00097
	10m	SAL-A-V2PEG-0-124-10/A3/075	55-00098
TPU, UL, black Li9Y11Y, 3x0,75mm²	2m	SAL-A-V2PEG-0-124-2/K1/075	55-00093
	3m	SAL-A-V2PEG-0-124-3/K1/075	55-00043
	5m	SAL-A-V2PEG-0-124-5/K1/075	55-00094
	10m	SAL-A-V2PEG-0-124-10/K1/075	55-00044

For custom length or quality levels contact factory.

VALVEPLUGS CONFIGURATION B, WITH OVERMOULDED CABLE

2-pos + ground, without protection circuit

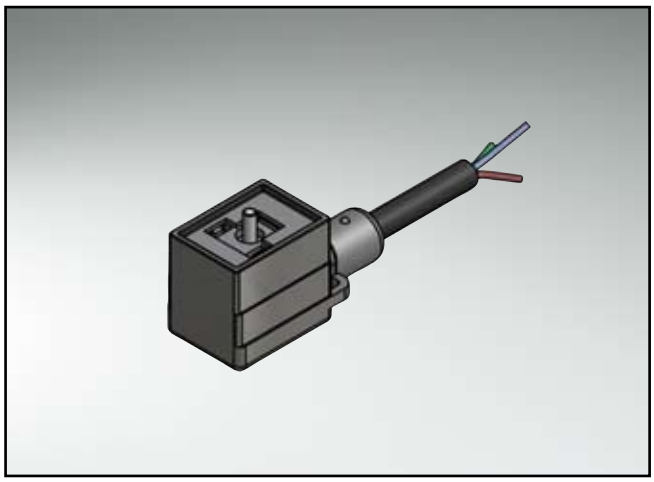

TECHNICAL DATA

Rated voltage	230 AC/DC
Current rating	4A at +40°C
Pollution degree	3
Degree of protection	IP67 in mated condition
Temperature range	-25°C to +80°C
Mating cycles	> 50

Directive 2002 95 EC „RoHS" Compliant

PIN CONFIGURATION

2-pos + Ground

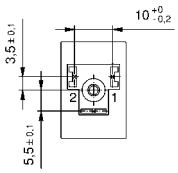

CONTACT ASSIGNMENT 2-POS + GROUND

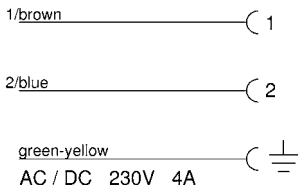

DIMENSION DRAWING

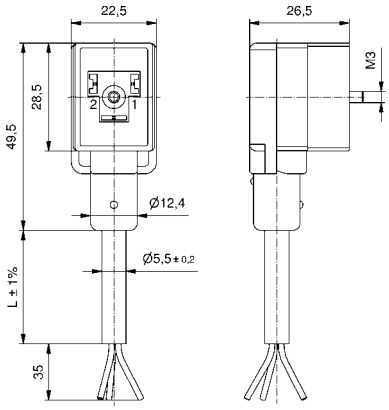

ORDER DATA

Cable	Length/L	Description	2-pos + Ground Part-no.
PVC, black LiYY 3x0,5mm²	2m	SAL-B-V2PE-0-0220-2/A2	55-00101
	3m	SAL-B-V2PE-0-0220-3/A2	55-00102
	5m	SAL-B-V2PE-0-0220-5/A2	55-00103
	10m	SAL-B-V2PE-0-0220-10/A2	55-00104
PUR/PVC black LiYY11Y 3x0,5mm²	2m	SAL-B-V2PE-0-0220-2/H2	55-00099
	3m	SAL-B-V2PE-0-0220-3/H2	55-00002
	5m	SAL-B-V2PE-0-0220-5/H2	55-00003
	10m	SAL-B-V2PE-0-0220-10/H2	55-00100

For custom length or quality levels contact factory.

Cable	Length/L	Description	2-pos + Ground Part-no.
PVC, UL, grey LiYY 3x0,75mm²	2m	SAL-B-V2PE-0-0220-2/A3/075	55-00115
	3m	SAL-B-V2PE-0-0220-3/A3/075	55-00116
	5m	SAL-B-V2PE-0-0220-5/A3/075	55-00117
	10m	SAL-B-V2PE-0-0220-10/A3/075	55-00118
TPU, UL, black Li9Y11Y, 3x0,75mm²	2m	SAL-B-V2PE-0-0220-2/K1/075	55-00111
	3m	SAL-B-V2PE-0-0220-3/K1/075	55-00112
	5m	SAL-B-V2PE-0-0220-5/K1/075	55-00113
	10m	SAL-B-V2PE-0-0220-10/K1/075	55-00114

For custom length or quality levels contact factory.

VALVEPLUGS CONFIGURATION B, WITH OVERMOULDED CABLE

2-pos + ground, with protection circuit

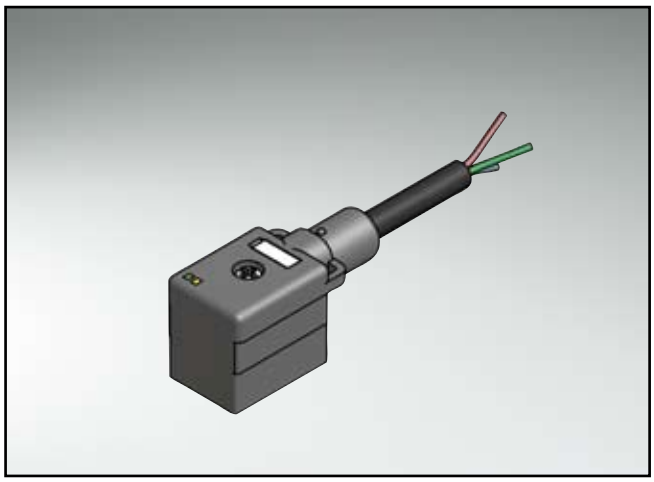

TECHNICAL DATA

Rated voltage	24 AC/DC
Current rating	4A at +40°C
Pollution degree	3
Degree of protection	IP67 in mated condition
Temperature range	-25°C to +80°C
Mating cycles	> 50

Directive 2002 95 EC „RoHS" Compliant

PIN CONFIGURATION

2-pos + Ground

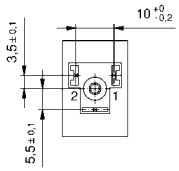

CONTACT ASSIGNMENT 2-POS + GROUND

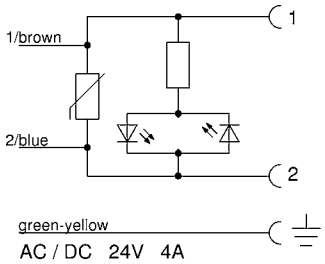

DIMENSION DRAWING

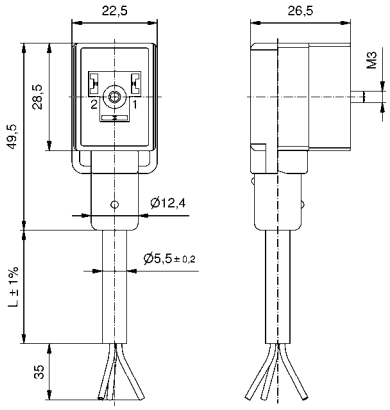

ORDER DATA

Cable	Length/L	Description	2-pos + Ground Part-no.
PVC, black LiYY 3x0,5mm²	2m	SAL-B-V2PE-0-124-2/A2	55-00107
	3m	SAL-B-V2PE-0-124-3/A2	55-00108
	5m	SAL-B-V2PE-0-124-5/A2	55-00109
	10m	SAL-B-V2PE-0-124-10/A2	55-00110
PUR/PVC black LiYY11Y 3x0,5mm²	2m	SAL-B-V2PE-0-124-2/H2	55-00105
	3m	SAL-B-V2PE-0-124-3/H2	55-00018
	5m	SAL-B-V2PE-0-124-5/H2	55-00019
	10m	SAL-B-V2PE-0-124-10/H2	55-00106

For custom length or quality levels contact factory.

Cable	Length/L	Description	2-pos + Ground Part-no.
PVC, UL, grey LiYY 3x0,75mm²	2m	SAL-B-V2PE-0-124-2/A3/075	55-00123
	3m	SAL-B-V2PE-0-124-3/A3/075	55-00124
	5m	SAL-B-V2PE-0-124-5/A3/075	55-00125
	10m	SAL-B-V2PE-0-124-10/A3/075	55-00126
TPU, UL, black Li9Y11Y, 3x0,75mm²	2m	SAL-B-V2PE-0-124-2/K1/075	55-00119
	3m	SAL-B-V2PE-0-124-3/K1/075	55-00120
	5m	SAL-B-V2PE-0-124-5/K1/075	55-00121
	10m	SAL-B-V2PE-0-124-10/K1/075	55-00122

For custom length or quality levels contact factory.

VALVEPLUGS CONFIGURATION B, WITH OVERMOULDED CABLE

2-pos + ground, without protection circuit, ground turned 180°

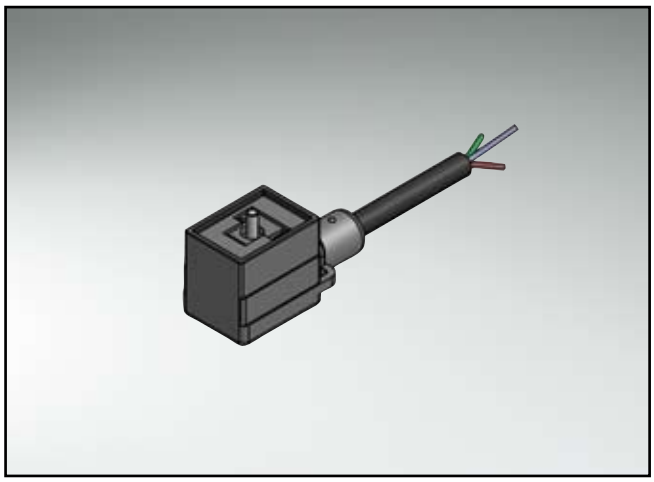

TECHNICAL DATA

Rated voltage	230 AC/DC
Current rating	4A at +40°C
Pollution degree	3
Degree of protection	IP67 in mated condition
Temperature range	-25°C to +80°C
Mating cycles	> 50

Directive 2002 95 EC „RoHS" Compliant

PIN CONFIGURATION

2-pos + Ground

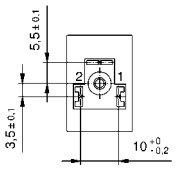

CONTACT ASSIGNMENT 2-POS + GROUND

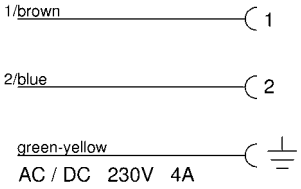

DIMENSION DRAWING

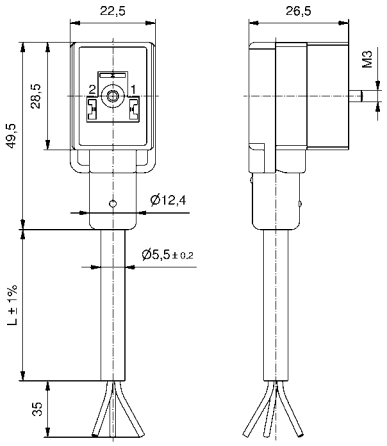

ORDER DATA

Cable	Length/L	Description	2-pos + Ground Part-no.
PVC, black LiYY 3x0,5mm²	2m	SAL-B-V2PE-180-0220-2/A2	55-00129
	3m	SAL-B-V2PE-180-0220-3/A2	55-00130
	5m	SAL-B-V2PE-180-0220-5/A2	55-00131
	10m	SAL-B-V2PE-180-0220-10/A2	55-00132
PUR/PVC black LiYY11Y 3x0,5mm²	2m	SAL-B-V2PE-180-0220-2/H2	55-00127
	3m	SAL-B-V2PE-180-0220-3/H2	55-00006
	5m	SAL-B-V2PE-180-0220-5/H2	55-00007
	10m	SAL-B-V2PE-180-0220-10/H2	55-00128

For custom length or quality levels contact factory.

Cable	Length/L	Description	2-pos + Ground Part-no.
PVC, UL, grey LiYY 3x0,75mm²	2m	SAL-B-V2PE-180-0220-2/A3/075	55-00143
	3m	SAL-B-V2PE-180-0220-3/A3/075	55-00144
	5m	SAL-B-V2PE-180-0220-5/A3/075	55-00145
	10m	SAL-B-V2PE-180-0220-10/A3/075	55-00075
TPU, UL, black Li9Y11Y, 3x0,75mm²	2m	SAL-B-V2PE-180-0220-2/K1/075	55-00139
	3m	SAL-B-V2PE-180-0220-3/K1/075	55-00140
	5m	SAL-B-V2PE-180-0220-5/K1/075	55-00141
	10m	SAL-B-V2PE-180-0220-10/K1/075	55-00142

For custom length or quality levels contact factory.

VALVEPLUGS CONFIGURATION B, WITH OVERMOULDED CABLE

2-pos + ground, with protection circuit, ground turned 180°

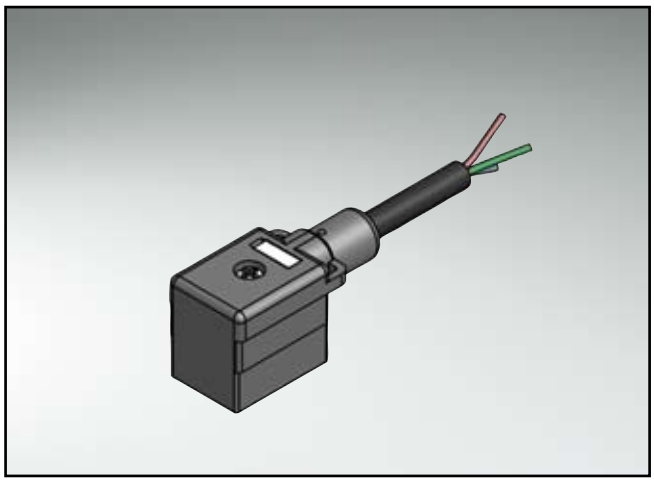

TECHNICAL DATA

Rated voltage	24 AC/DC
Current rating	4A at +40°C
Pollution degree	3
Degree of protection	IP67 in mated condition
Temperature range	-25°C to +80°C
Mating cycles	> 50

Directive 2002 95 EC „RoHS" Compliant

PIN CONFIGURATION

2-pos + Ground

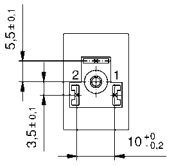

CONTACT ASSIGNMENT 2-POS + GROUND

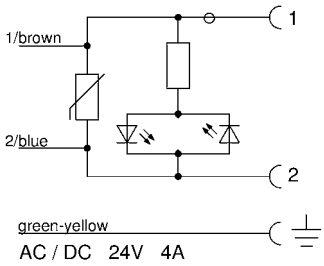

DIMENSION DRAWING

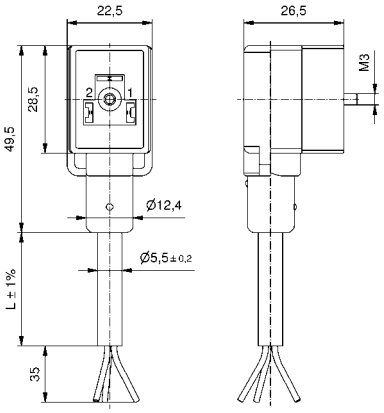

ORDER DATA

Cable	Length/L	Description	2-pos + Ground Part-no.
PVC, black LiYY 3x0,5mm²	2m	SAL-B-V2PE-180-124-2/A2	55-00135
	3m	SAL-B-V2PE-180-124-3/A2	55-00136
	5m	SAL-B-V2PE-180-124-5/A2	55-00137
	10m	SAL-B-V2PE-180-124-10/A2	55-00138
PUR/PVC black LiYY11Y 3x0,5mm²	2m	SAL-B-V2PE-180-124-2/H2	55-00133
	3m	SAL-B-V2PE-180-124-3/H2	55-00022
	5m	SAL-B-V2PE-180-124-5/H2	55-00023
	10m	SAL-B-V2PE-180-124-10/H2	55-00134

For custom length or quality levels contact factory.

Cable	Length/L	Description	2-pos + Ground Part-no.
PVC, UL, grey LiYY 3x0,75mm²	2m	SAL-B-V2PE-180-124-2/A3/075	55-00150
	3m	SAL-B-V2PE-180-124-3/A3/075	55-00151
	5m	SAL-B-V2PE-180-124-5/A3/075	55-00152
	10m	SAL-B-V2PE-180-124-10/A3/075	55-00153
TPU, UL, black Li9Y11Y, 3x0,75mm²	2m	SAL-B-V2PE-180-124-2/K1/075	55-00146
	3m	SAL-B-V2PE-180-124-3/K1/075	55-00147
	5m	SAL-B-V2PE-180-124-5/K1/075	55-00148
	10m	SAL-B-V2PE-180-124-10/K1/075	55-00149

For custom length or quality levels contact factory.

VALVEPLUGS CONFIGURATION B-INDUSTRIE, WITH OVERMOULDED CABLE

2-pos + ground, without protection circuit

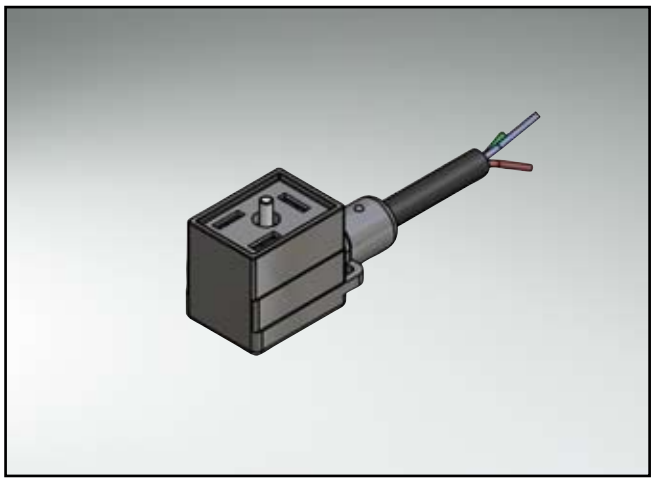

TECHNICAL DATA

Rated voltage	230 AC/DC
Current rating	4A at +40°C
Pollution degree	3
Degree of protection	IP67 in mated condition
Temperature range	-25°C to +80°C
Mating cycles	> 50

Directive 2002 95 EC „RoHS" Compliant

PIN CONFIGURATION

2-pos + Ground

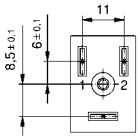

CONTACT ASSIGNMENT 2-POS + GROUND

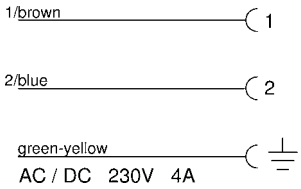

DIMENSION DRAWING

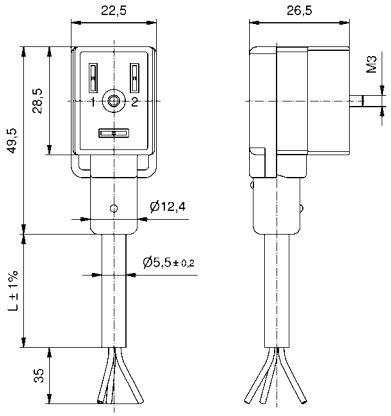

ORDER DATA

Cable	Length/L	Description	2-pos + Ground Part-no.
PVC, black LiYYav 3x0,5mm²	2m	SAL-BI-V2PE-0-0220-2/A2	55-00156
	3m	SAL-BI-V2PE-0-0220-3/A2	55-00157
	5m	SAL-BI-V2PE-0-0220-5/A2	55-00158
	10m	SAL-BI-V2PE-0-0220-10/A2	55-00159
PUR/PVC black LiYY11Y 3x0,5mm²	2m	SAL-BI-V2PE-0-0220-2/H2	55-00154
	3m	SAL-BI-V2PE-0-0220-3/H2	55-00008
	5m	SAL-BI-V2PE-0-0220-5/H2	55-00009
	10m	SAL-BI-V2PE-0-0220-10/H2	55-00155

For custom length or quality levels contact factory.

Cable	Length/L	Description	2-pos + Ground Part-no.
PVC, UL, grey LiYY 3x0,75mm²	2m	SAL-BI-V2PE-0-0220-2/A3/075	55-00169
	3m	SAL-BI-V2PE-0-0220-3/A3/075	55-00170
	5m	SAL-BI-V2PE-0-0220-5/A3/075	55-00171
	10m	SAL-BI-V2PE-0-0220-10/A3/075	55-00172
TPU, UL, black Li9Y11Y, 3x0,75mm²	2m	SAL-BI-V2PE-0-0220-2/K1/075	55-00165
	3m	SAL-BI-V2PE-0-0220-3/K1/075	55-00166
	5m	SAL-BI-V2PE-0-0220-5/K1/075	55-00167
	10m	SAL-BI-V2PE-0-0220-10/K1/075	55-00168

For custom length or quality levels contact factory.

VALVEPLUGS CONFIGURATION B-INDUSTRIE, WITH OVERMOULDED CABLE

2-pos + ground, with protection circuit

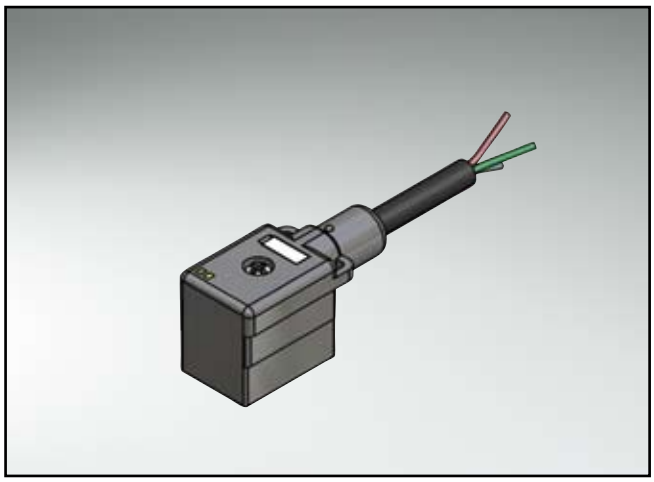

TECHNICAL DATA

Rated voltage	24 AC/DC
Current rating	4A at +40°C
Pollution degree	3
Degree of protection	IP67 in mated condition
Temperature range	-25°C to +80°C
Mating cycles	> 50

Directive 2002 95 EC „RoHS" Compliant

PIN CONFIGURATION

2-pos + Ground

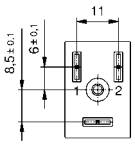

CONTACT ASSIGNMENT 2-POS + GROUND

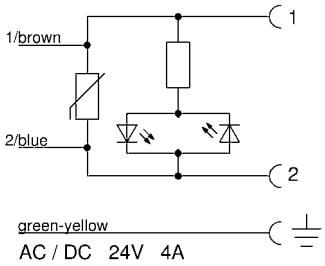

DIMENSION DRAWING

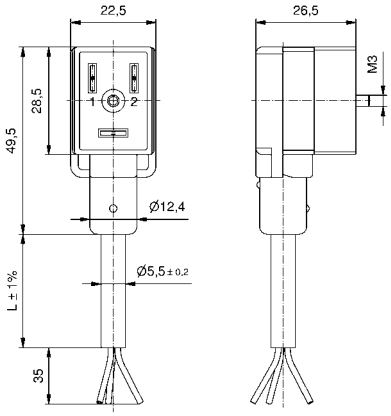

ORDER DATA

Cable	Length/L	Description	2-pos + Ground Part-no.
PVC, black LiYY 3x0,5mm²	2m	SAL-BI-V2PE-0-124-2/A2	55-00161
	3m	SAL-BI-V2PE-0-124-3/A2	55-00162
	5m	SAL-BI-V2PE-0-124-5/A2	55-00163
	10m	SAL-BI-V2PE-0-124-10/A2	55-00164
PUR/PVC black LiYY11Y 3x0,5mm²	2m	SAL-BI-V2PE-0-124-2/H2	55-00160
	3m	SAL-BI-V2PE-0-124-3/H2	55-00012
	5m	SAL-BI-V2PE-0-124-5/H2	55-00013
	10m	SAL-BI-V2PE-0-124-10/H2	55-00040

For custom length or quality levels contact factory.

Cable	Length/L	Description	2-pos + Ground Part-no.
PVC, UL, grey LiYY 3x0,75mm²	2m	SAL-BI-V2PE-0-124-2/A3/075	55-00177
	3m	SAL-BI-V2PE-0-124-3/A3/075	55-00178
	5m	SAL-BI-V2PE-0-124-5/A3/075	55-00179
	10m	SAL-BI-V2PE-0-124-10/A3/075	55-00180
TPU, UL, black Li9Y11Y, 3x0,75mm²	2m	SAL-BI-V2PE-0-124-2/K1/075	55-00173
	3m	SAL-BI-V2PE-0-124-3/K1/075	55-00174
	5m	SAL-BI-V2PE-0-124-5/K1/075	55-00175
	10m	SAL-Bi-V2PE-0-124-10/K1/075	55-00176

For custom length or quality levels contact factory.

VALVEPLUGS CONFIGURATION B-INDUSTRIE, WITH OVERMOULDED CABLE

2-pos + ground, without protection circuit, ground turned 180°

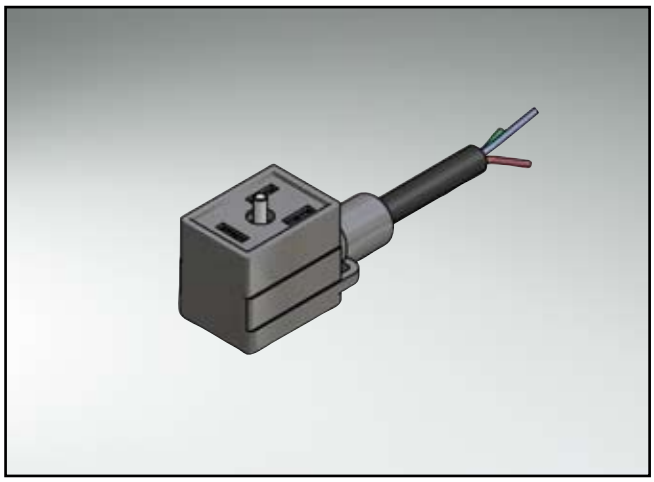

TECHNICAL DATA

Rated voltage	230 AC/DC
Current rating	4A at +40°C
Pollution degree	3
Degree of protection	IP67 in mated condition
Temperature range	-25°C to +80°C
Mating cycles	> 50

Directive 2002 95 EC „RoHS" Compliant

PIN CONFIGURATION

2-pos + Ground

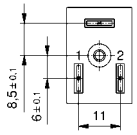

CONTACT ASSIGNMENT 2-POS + GROUND

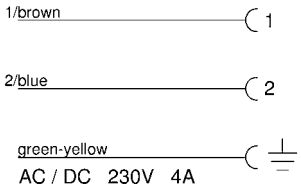

DIMENSION DRAWING

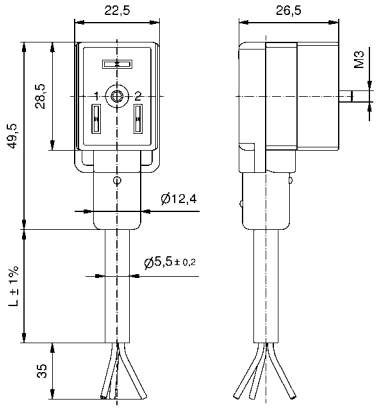

ORDER DATA

Cable	Length/L	Description	2-pos + Ground Part-no.
PVC, black LiYY 3x0,5mm²	2m	SAL-BI-V2PE-180-0220-2/A2	55-00183
	3m	SAL-BI-V2PE-180-0220-3/A2	55-00184
	5m	SAL-BI-V2PE-180-0220-5/A2	55-00185
	10m	SAL-BI-V2PE-180-0220-10/A2	55-00186
PUR/PVC black LiYY11Y 3x0,5mm²	2m	SAL-BI-V2PE-180-0220-2/H2	55-00181
	3m	SAL-BI-V2PE-180-0220-3/H2	55-00010
	5m	SAL-BI-V2PE-180-0220-5/H2	55-00011
	10m	SAL-BI-V2PE-180-0220-10/H2	55-00182

For custom length or quality levels contact factory.

Cable	Length/L	Description	2-pos + Ground Part-no.
PVC, UL, grey LiYY 3x0,75mm²	2m	SAL-BI-V2PE-180-0220-2/A3/075	55-00195
	3m	SAL-BI-V2PE-180-0220-3/A3/075	55-00196
	5m	SAL-BI-V2PE-180-0220-5/A3/075	55-00197
	10m	SAL-BI-V2PE-180-0220-10/A3/075	55-00198
TPU, UL, black Li9Y11Y, 3x0,75mm²	2m	SAL-BI-V2PE-180-0220-2/K1/075	55-00191
	3m	SAL-BI-V2PE-180-0220-3/K1/075	55-00192
	5m	SAL-BI-V2PE-180-0220-5/K1/075	55-00193
	10m	SAL-BI-V2PE-180-0220-10/K1/075	55-00194

For custom length or quality levels contact factory.

VALVEPLUGS CONFIGURATION B-INDUSTRIE, WITH OVERMOULDED CABLE

2-pos + ground, with protection circuit, ground turned 180°

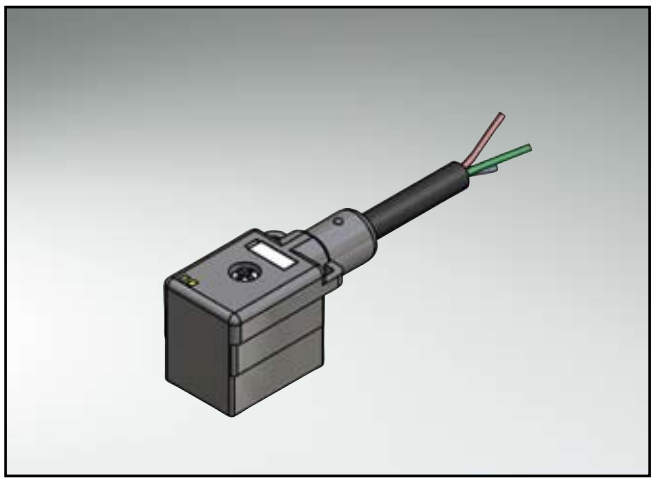

TECHNICAL DATA

Rated voltage	24 AC/DC
Current rating	4A at +40°C
Pollution degree	3
Degree of protection	IP67 in mated condition
Temperature range	-25°C to +80°C
Mating cycles	> 50

Directive 2002 95 EC „RoHS" Compliant

PIN CONFIGURATION

2-pos + Ground

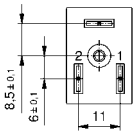

CONTACT ASSIGNMENT 2-POS + GROUND

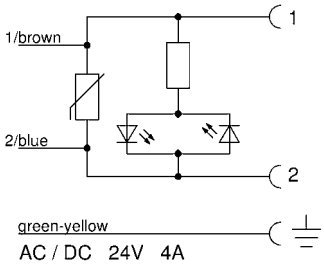

DIMENSION DRAWING

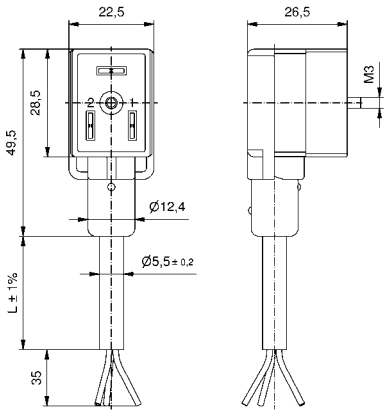

ORDER DATA

Cable	Length/L	Description	2-pos + Ground Part-no.
PVC, black LiYY 3x0,5mm²	2m	SAL-BI-V2PE-180-124-2/A2	55-00187
	3m	SAL-BI-V2PE-180-124-3/A2	55-00188
	5m	SAL-BI-V2PE-180-124-5/A2	55-00189
	10m	SAL-BI-V2PE-180-124-10/A2	55-00190
PUR/PVC black LiYY11Y 3x0,5mm²	2m	SAL-BI-V2PE-180-124-2/H2	55-00073
	3m	SAL-BI-V2PE-180-124-3/H2	55-00014
	5m	SAL-BI-V2PE-180-124-5/H2	55-00015
	10m	SAL-BI-V2PE-180-124-10/H2	55-00074

For custom length or quality levels contact factory.

Cable	Length/L	Description	2-pos + Ground Part-no.
PVC, UL, grey LiYY 3x0,75mm²	2m	SAL-BI-V2PE-180-124-2/A3/075	55-00203
	3m	SAL-BI-V2PE-180-124-3/A3/075	55-00204
	5m	SAL-BI-V2PE-180-124-5/A3/075	55-00205
	10m	SAL-BI-V2PE-180-124-10/A3/075	55-00206
TPU, UL, black Li9Y11Y, 3x0,75mm²	2m	SAL-BI-V2PE-180-124-2/K1/075	55-00199
	3m	SAL-BI-V2PE-180-124-3/K1/075	55-00200
	5m	SAL-BI-V2PE-180-124-5/K1/075	55-00201
	10m	SAL-BI-V2PE-180-124-10/K1/075	55-00202

For custom length or quality levels contact factory.

VALVEPLUGS CONFIGURATION C, WITH OVERMOULDED CABLE

2-pos + ground, ground jumpered, without protection circuit

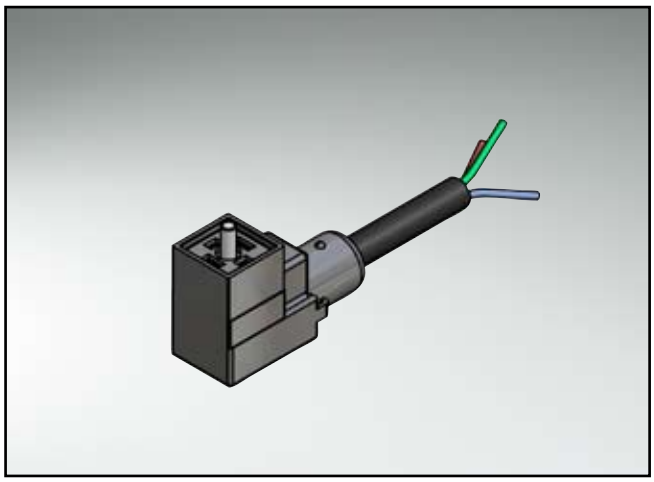

TECHNICAL DATA

Rated voltage	230 AC/DC
Current rating	4A at +40°C
Pollution degree	3
Degree of protection	IP67 in mated condition
Temperature range	-25°C to +80°C
Mating cycles	> 50

Directive 2002 95 EC „RoHS" Compliant

PIN CONFIGURATION

2-pos + Ground

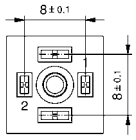

CONTACT ASSIGNMENT 2-POS + GROUND

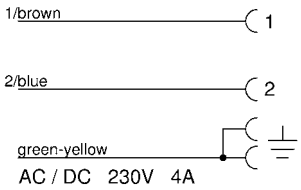

DIMENSION DRAWING

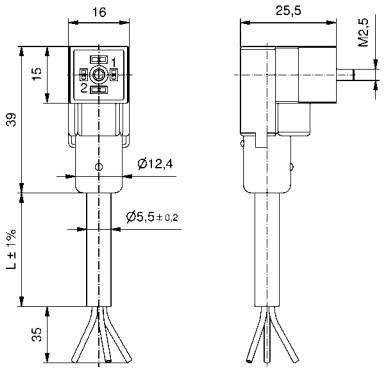

ORDER DATA

Cable	Length/L	Description	2-pos + Ground Part-no.
PVC, black LiYY 3x0,5mm²	2m	SAL-C8-V2PEG-0-0220-2/A2	55-00209
	3m	SAL-C8-V2PEG-0-0220-3/A2	55-00210
	5m	SAL-C8-V2PEG-0-0220-5/A2	55-00211
	10m	SAL-C8-V2PEG-0-0220-10/A2	55-00212
PUR/PVC black LiYY11Y 3x0,5mm²	2m	SAL-C8-V2PEG-0-0220-2/H2	55-00207
	3m	SAL-C8-V2PEG-0-0220-3/H2	55-00016
	5m	SAL-C8-V2PEG-0-0220-5/H2	55-00017
	10m	SAL-C8-V2PEG-0-0220-10/H2	55-00208

For custom length or quality levels contact factory.

Cable	Length/L	Description	2-pos + Ground Part-no.
PVC, UL, grey LiYY 3x0,75mm²	2m	SAL-C8-V2PEG-0-0220-2/A3/075	55-00222
	3m	SAL-C8-V2PEG-0-0220-3/A3/075	55-00223
	5m	SAL-C8-V2PEG-0-0220-5/A3/075	55-00224
	10m	SAL-C8-V2PEG-0-0220-10/A3/075	55-00225
TPU, UL, black Li9Y11Y, 3x0,75mm²	2m	SAL-C8-V2PEG-0-0220-2/K1/075	55-00218
	3m	SAL-C8-V2PEG-0-0220-3/K1/075	55-00219
	5m	SAL-C8-V2PEG-0-0220-5/K1/075	55-00220
	10m	SAL-C8-V2PEG-0-0220-10/K1/075	55-00221

For custom length or quality levels contact factory.

VALVEPLUGS CONFIGURATION C, WITH OVERMOULDED CABLE

2-pos + ground, ground jumpered, with protection circuit

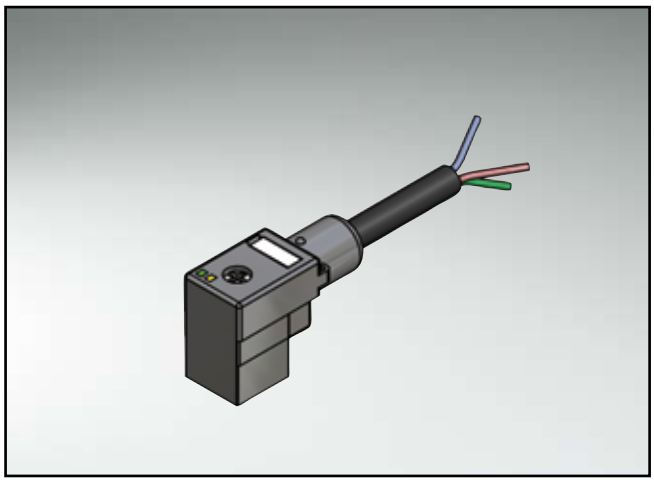

TECHNICAL DATA

Rated voltage	24 AC/DC
Current rating	4A at +40°C
Pollution degree	3
Degree of protection	IP67 in mated condition
Temperature range	-25°C to +80°C
Mating cycles	> 50

Directive 2002 95 EC „RoHS" Compliant

PIN CONFIGURATION

2-pos + Ground

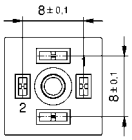

CONTACT ASSIGNMENT 2-POS + GROUND

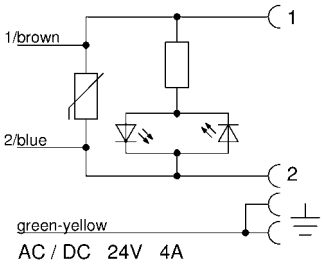

DIMENSION DRAWING

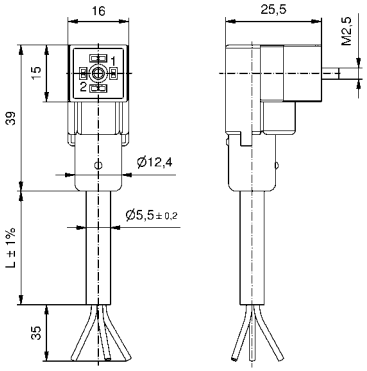

ORDER DATA

Cable	Length/L	Description	2-pos + Ground Part-no.
PVC, black LiYY 3x0,5mm²	2m	SAL-C8-V2PEG-0-124-2/A2	55-00214
	3m	SAL-C8-V2PEG-0-124-3/A2	55-00215
	5m	SAL-C8-V2PEG-0-124-5/A2	55-00216
	10m	SAL-C8-V2PEG-0-124-10/A2	55-00217
PUR/PVC black LiYY11Y 3x0,5mm²	2m	SAL-C8-V2PEG-0-124-2/H2	55-00213
	3m	SAL-C8-V2PEG-0-124-3/H2	55-00020
	5m	SAL-C8-V2PEG-0-124-5/H2	55-00021
	10m	SAL-C8-V2PEG-0-124-10/H2	55-00041

For custom length or quality levels contact factory.

Cable	Length/L	Description	2-pos + Ground Part-no.
PVC, UL, grey LiYY 3x0,75mm²	2m	SAL-C8-V2PEG-0-124-2/A3/075	55-00230
	3m	SAL-C8-V2PEG-0-124-3/A3/075	55-00231
	5m	SAL-C8-V2PEG-0-124-5/A3/075	55-00232
	10m	SAL-C8-V2PEG-0-124-10/A3/075	55-00233
TPU, UL, black Li9Y11Y, 3x0,75mm²	2m	SAL-C8-V2PEG-0-124-2/K1/075	55-00226
	3m	SAL-C8-V2PEG-0-124-3/K1/075	55-00227
	5m	SAL-C8-V2PEG-0-124-5/K1/075	55-00228
	10m	SAL-C8-V2PEG-0-124-10/K1/075	55-00229

For custom length or quality levels contact factory.

VALVEPLUGS CONFIGURATION C, WITH OVERMOULDED CABLE

2-pos + ground, ground jumpered, without protection circuit, contact distance 9,4mm

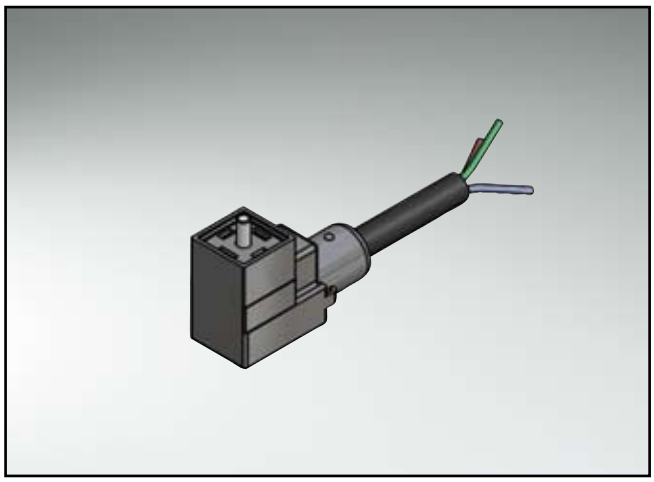

TECHNICAL DATA

Rated voltage	230 AC/DC
Current rating	4A at +40°C
Pollution degree	3
Degree of protection	IP67 in mated condition
Temperature range	-25°C to +80°C
Mating cycles	> 50

Directive 2002 95 EC „RoHS" Compliant

PIN CONFIGURATION

2-pos + Ground

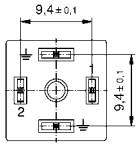

CONTACT ASSIGNMENT 2-POS + GROUND

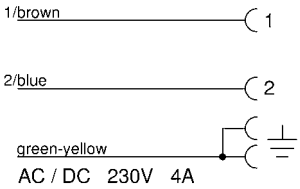

DIMENSION DRAWING

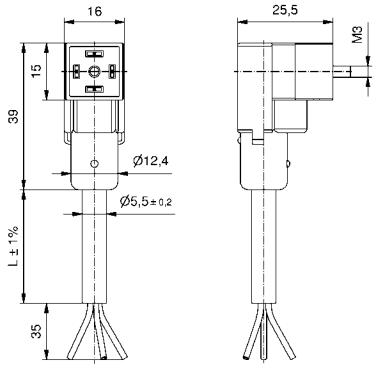

ORDER DATA

Cable	Length/L	Description	2-pos + Ground Part-no.
PVC, black LiYY 3x0,5mm²	2m	SAL-C9-V2PEG-0-0220-2/A2	55-00235
	3m	SAL-C9-V2PEG-0-0220-3/A2	55-00236
	5m	SAL-C9-V2PEG-0-0220-5/A2	55-00237
	10m	SAL-C9-V2PEG-0-0220-10/A2	55-00238
PUR/PVC black LiYY11Y 3x0,5mm²	2m	SAL-C9-V2PEG-0-0220-2/H2	55-00234
	3m	SAL-C9-V2PEG-0-0220-3/H2	55-00024
	5m	SAL-C9-V2PEG-0-0220-5/H2	55-00025
	10m	SAL-C9-V2PEG-0-0220-10/H2	55-00046

For custom length or quality levels contact factory.

Cable	Length/L	Description	2-pos + Ground Part-no.
PVC, UL, grey LiYY 3x0,75mm²	2m	SAL-C9-V2PEG-0-0220-2/A3/075	55-00248
	3m	SAL-C9-V2PEG-0-0220-3/A3/075	55-00249
	5m	SAL-C9-V2PEG-0-0220-5/A3/075	55-00250
	10m	SAL-C9-V2PEG-0-0220-10/A3/075	55-00251
TPU, UL, black Li9Y11Y, 3x0,75mm²	2m	SAL-C9-V2PEG-0-0220-2/K1/075	55-00244
	3m	SAL-C9-V2PEG-0-0220-3/K1/075	55-00245
	5m	SAL-C9-V2PEG-0-0220-5/K1/075	55-00246
	10m	SAL-C9-V2PEG-0-0220-10/K1/075	55-00247

For custom length or quality levels contact factory.

VALVEPLUGS CONFIGURATION C, WITH OVERMOULDED CABLE

2-pos + ground, ground jumpered, with protection circuit, contact distance 9,4mm

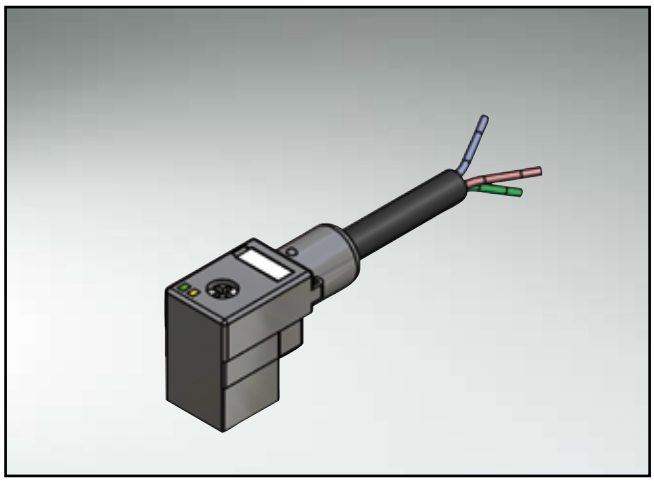

TECHNICAL DATA

Rated voltage	24 AC/DC
Current rating	4A at +40°C
Pollution degree	3
Degree of protection	IP67 in mated condition
Temperature range	-25°C to +80°C
Mating cycles	> 50

Directive 2002 95 EC „RoHS" Compliant

PIN CONFIGURATION

2-pos + Ground

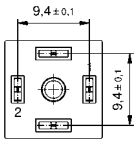

CONTACT ASSIGNMENT 2-POS + GROUND

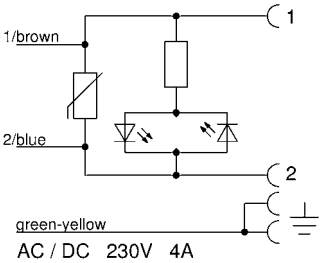

DIMENSION DRAWING

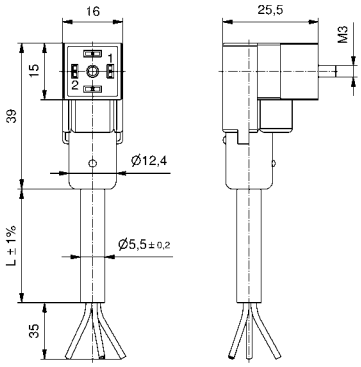

ORDER DATA

Cable	Length/L	Description	2-pos + Ground Part-no.
PVC, black LiYY 3x0,5mm²	2m	SAL-C9-V2PEG-0-124-2/A2	55-00240
	3m	SAL-C9-V2PEG-0-124-3/A2	55-00241
	5m	SAL-C9-V2PEG-0-124-5/A2	55-00242
	10m	SAL-C9-V2PEG-0-124-10/A2	55-00243
PUR/PVC black LiYY11Y 3x0,5mm²	2m	SAL-C9-V2PEG-0-124-2/H2	55-00239
	3m	SAL-C9-V2PEG-0-124-3/H2	55-00028
	5m	SAL-C9-V2PEG-0-124-5/H2	55-00029
	10m	SAL-C9-V2PEG-0-124-10/H2	55-00042

For custom length or quality levels contact factory.

Cable	Length/L	Description	2-pos + Ground Part-no.
PVC, UL, grey LiYY 3x0,75mm²	2m	SAL-C9-V2PEG-0-124-2/A3/075	55-00256
	3m	SAL-C9-V2PEG-0-124-3/A3/075	55-00257
	5m	SAL-C9-V2PEG-0-124-5/A3/075	55-00258
	10m	SAL-C9-V2PEG-0-124-10/A3/075	55-00259
TPU, UL, black Li9Y11Y, 3x0,75mm²	2m	SAL-C9-V2PEG-0-124-2/K1/075	55-00252
	3m	SAL-C9-V2PEG-0-124-3/K1/075	55-00253
	5m	SAL-C9-V2PEG-0-124-5/K1/075	55-00254
	10m	SAL-C9-V2PEG-0-124-10/K1/075	55-00255

For custom length or quality levels contact factory.

Section 11

Accessories/Cable matrix/ Technical information

SAL Protection cap

M12x1 Male connector yellow

M12x1 Female connector black
M12x1 Female connector white

M8x1 Female connector black

Dimension drawing

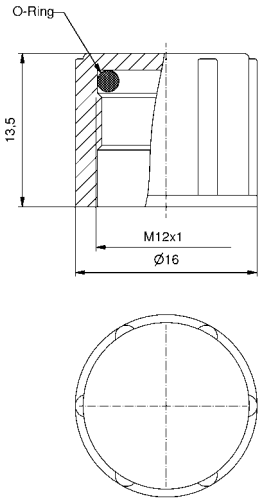

Dimension drawing

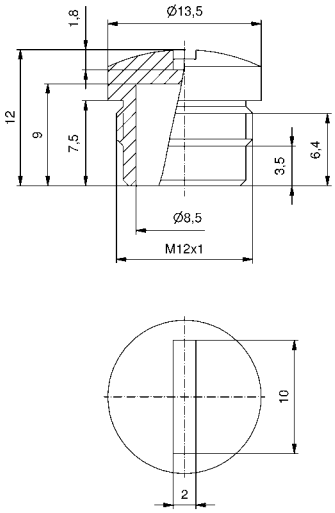

Dimension drawing

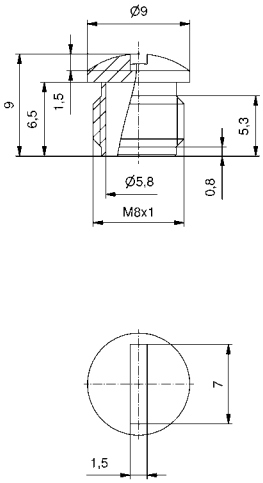

Order data

	Description	Part-no.
M12x1	Protection cap M12x1 Male connector yellow	43-11359
M12x1	Protection cap M12x1 Female connector black	43-11357
M12x1	Protection cap M12x1 Female connector white	43-11358
M8x1	Protection cap M8x1 Female connector black	42-10129

SAL M12x1 Connectors

	Pos	Cable-diameter	Wire	Colour of wire
A1 PVC grey	3-pos	4,4	3x0,34mm²	bn - bu - bk
	4-pos	5,4	4x0,34mm²	bn - wh - bu - bk
	5-pos	5,2	5x0,34mm²	bn - wh - bu - bk - gn/ye
	6-pos	6,0	6x0,25mm²	bn - wh - bu - bk - gy - pk
	8-pos	6,2	8x0,25mm²	wh - bn - gn - ye - gy - pk - bu - rd
A3 PVC UL grey	12-pos	6,2	12x0,14mm²	bn - bu - wh - gn - pk - ye - bk - gy - rd - vt - gy/pk - rd/bu
G2 TPU UL black	4-pos	5,4	4x0,34mm²	bn - wh - bu - bk
	5-pos	5,4	5x0,25mm²	bn - wh - bu - bk - gy
	8-pos	6,6	8x0,25mm²	wh - bn - gn - ye - gy - pk - bu - rd
	12-pos	6,2	12x0,14mm²	bn - bu - wh - gn - pk - ye - bk - gy - rd - vt - gy/pk - rd/bu
G3 PVC UL grey	4-pos	5,4	4x0,34mm²	bn - wh - bu - bk
	5-pos	5,4	5x0,25mm²	bn - wh - bu - bk - gy
	8-pos	6,6	8x0,25mm²	wh - bn - gn - ye - gy - pk - bu - rd
	12-pos	6,7	12x0,14mm²	bn - bu - wh - gn - pk - ye - bk - gy - rd - vt - gy/pk - rd/bu
J1 UL orange	3-pos	4,4	3x0,34mm²	bn - bu - bk
	4-pos	5,4	4x0,34mm²	bn - wh - bu - bk
	5-pos	5,4	5x0,34mm²	bn - wh - bu - bk - gn/ye
K1 TPU UL black	3-pos	4,4	3x0,34mm²	bn - bu - bk
	4-pos	4,7	4x0,34mm²	bn - wh - bu - bk
	5-pos	5,1	5x0,34mm²	bn - wh - bu - bk - gn/ye
	6-pos	6	6x0,25mm²	bn - wh - bu - bk - gy - pk
	8-pos	6	8x0,25mm²	wh - bn - gn - ye - gy - pk - bu - rd
	12-pos	6,1	12x0,14mm²	bn - bu - wh - gn - pk - ye - bk - gy - rd - vt - gy/pk - rd/bu
P1 orange	4-pos	4,7	4x0,34mm²	bn - wh - bu - bk
	5-pos	5,2	5x0,34mm²	bn - wh - bu - bk - gn/ye
S1 black	4-pos	5,2	4x0,34mm²	bn - wh - bu - bk
	5-pos	5,4	5x0,34mm²	bn - wh - bu - bk - gn/ye

SAL M8x1/Ø8mm Connectors

A1 PVC grey	3-pos	4,4	3x0,25mm²	bn - bu - bk
	4-pos	4,7	4x0,25mm²	bn - wh - bu - bk
K1 TPU UL black	3-pos	4,4	3x0,25mm²	bn - bu - bk
	4-pos	4,4	4x0,25mm²	bn - wh - bu - bk

SAL 7/8" Connectors

A3 PVC UL grey	3-pos	5,4	3x0,75mm²	bn - bu - gn/ye
	4-pos	5,8	4x0,75mm²	bk - bu - bn - wh
	5-pos	6,4	5x0,75mm²	bu - bk - wh - bn - gn/ye
A3 PVC UL grey	3-pos	7,1	3x1,50mm²	bn - bu - gn/ye
	4-pos	7,8	4x1,50mm²	bk - bu - bn - wh
	5-pos	8,5	5x1,50mm²	bu - bk - wh - bn - gn/ye

SAL 7/8" Connectors

	Pos	Cable-diameter	Wire	Colour of wire
K1 TPU UL black	3-pos	5,3	3x0,75mm²	bn - bu - gn/ye
	4-pos	5,7	4x0,75mm²	bk - bu - bn - wh
	5-pos	6,3	5x0,75mm²	bu - bk - wh - bn - gn/ye
K1 TPU UL black	3-pos	6,5	3x1,50mm²	bn - bu - gn/ye
	4-pos	7,1	4x1,50mm²	bk - bu - bn - wh
	5-pos	7,8	5x1,50mm²	bu - bk - wh - bn - gn/ye

SAL Rund24 Connectors

A3 PVC UL grey	4-pos	7,8	4x1,50mm²	bn - bu - bk - gn/ye

SAL M12x1 Connectors for Profibus DP

G4 TPU UL violet	2-pos	8	2 AWG 22	rd - gn
G5 PVC UL violet	2-pos	8	2 AWG 22	rd - gn
G7 TPU UL violet	2-pos	8,5	2 AWG 24	rd - gn

SAL M12x1 Connectors Industrial Ethernet

G6 TPU UL green	4-pos	6,5	4 AWG 22	ye - wh - or - bu

SAL Valveplugs

A2 PVC black	2-pos+Ground	5,5	3x0,5mm²	bn - bu - gn/ye
H2 PVC/PUR black	2-pos+Ground	5,5	3x0,5mm²	bn - bu - gn/ye
A3 PVC UL grey	2-pos+Ground	5,4	3x0,75mm²	bn - bu - gn/ye
K1 TPE UL black	2-pos+Ground	5,3	3x0,75mm²	bn - bu - gn/ye

SAL Junction systems

K3 TPU UL black	4-fold M12x1	8	3x1,0mm² + 8x0,34mm²	bu-bn-wh-gn-ye-gy-bn/gn-wh/gn-rd/bu-gy/pk-gn/ye
	8-fold M12x1	9,6	3x1,0mm² + 16x0,34mm²	bu-bn-wh-gn-ye-gy-pk-rd-bk-vt-gy/bn-wh/bn-ye/bn-wh/ye-bn/gn-wh/gn-rd/bu-gy/pk-gn/ye
	4-fold M8x1, 3-pos	6,4	2x0,75mm² + 4x0,34mm²	bu-bn-wh-gn-ye-gy
	4-fold M8x1, 4-pos	7,4	2x0,75mm² + 8x0,34mm²	bu-bn-wh-gn-ye-gy-gy/pk-rd/bu-wh/gn-bn/gn
	8-fold M8x1, 3-pos	7,4	2x0,75mm² + 8x0,34mm²	bu-bn-wh-gn-ye-gy-pk-rd-bk-vt
	8-fold M8x1, 4-pos	8,5	2x0,75mm² + 16x0,34mm²	bu-bn-wh-gn-ye-gy-pk-rd-bk-vt-gy/pk-rd/bu-wh/gn-bn/gn-wh/ye-ye/bn-wh/gy-gy/bn

SAL Junction systems Food&Beverage

A2 PVC black	4-fold	8,0	3x1,0mm² + 8x0,34mm²	bu-bn-wh-gn-ye-gy-bn/gn-wh/gn-rd/bu-gy/pk-gn/ye
	8-fold	9,6	3x1,0mm² + 16x0,34mm²	bu-bn-wh-gn-ye-gy-pk-rd-bk-vt-gy/bn-wh/bn-ye/bn-wh/ye-bn/gn-wh/gn-rd/bu-gy/pk-gn/ye

DEGREE OF PROTECTION

IP = International Protection

Code number 1 =
Protection against contact
and foreign bodies

Code number 2 =
Protection against water

IP 67

Connectors have to be protected for safety reasons from outside influences like dust, foreign objetcs, direct contact, moisture and water. This protection is provided on industrial connectors by its housings with their latching devices and sealed cable entries. The degree of protection can be selected depending on the type of intended use. The degree of protection is indicated by a material code which consists of constant key numbers IP (International Protection) and two subsequent code numbers. The first code number specifies the degree of protection against contact and foreign bodies. The second code number specifies the degree of protection against damaging intrusion of water.

KENNZIFFERN-DEFINITION

Code number 1	Definition	Explanation
0	Non-protected	
1	Protected against access to hazardous parts with the back of a hand. Protected against solid foreign objects of Ø ≥ 50mm	
2	Protected against access to hazardous parts with a finger. Protected against solid foreign objects of Ø ≥ 12,5mm	
3	Protected against access to hazardous parts with a tool. Protected against solid foreign objects of Ø ≥ 2,5mm	
4	Protected against access to hazardous parts with a wire. Protected against solid foreign objects of Ø ≥ 1mm	
5	Protected against access to hazardous parts with a wire. Dust protected.	Intrusion of dust is not totally prevented, but dust shall not penetrate in a quantity to interfere with satisfactory operation of the device or to impair safety.
6	Protected against access to hazardous parts with a wire. Dust-tight.	

Code number 2	Definition	Explanation
0	Non-protected	
1	Protected against water drops.	
2	Protected against water drops when enclosure tilted up to 15°.	
3	Protected against spraying water	Water sprayed of an angle up to 60° on either side of the vertical shall have no harmful effects.
4	Protected against splashing water	Water splashed against the disclosure from any directin shall have no harmfull effects.
5	Protected against water jets	
6	Protected against powerful water jets	
7	Protected against the effects of temporary immersion in water	Intrusion of water in quantities causing harmful effects shall not be possible when the enclosure is temporary immersed in water for 30 min. in 1m depth.3
8	Protected against the effects of temporary immersion in water	intrusion of water in quantities causing harmful effects shall not be possible when the enclosure is continuously immersed in water under conditions which shall be agreed between manufacturer and user but which are more severe than for numeral 7.
9	Protected against water during high pressure/steam cleaning	

American Wire Gauges

Since various areas of the industry are also using wires according to the American Wire Gauge (AWG). The following comparison chart is included to allow a cross reference between AWG and metric wire sizes (mm²).

Index number-Definition

AWG	Wire structure (mm)	Wire-Ø (mm)	Wire cross section (mm²)
30	1 x 0,25	0,25	0,05
	7 x 0,10	0,36	0,06
28	1 x 0,32	0,32	0,08
	7 x 0,13	0,38	0,09
26	1 x 0,40	0,40	0,13
	7 x 0,16	0,48	0,14
	19 x 0,10	0,51	0,15
24	1 x 0,51	0,51	0,21
	7 x 0,20	0,61	0,22
	19 x 0,13	0,64	0,25
22	1 x 0,64	0,64	0,33
	7 x 0,25	0,76	0,34
	19 x 0,16	0,81	0,38
20	1 x 0,81	0,81	0,52
	7 x 0,32	0,97	0,56
	19 x 0,25	1,27	0,93
18	1 x 1,02	1,02	0,82
	19 x 0,25	1,27	0,93
16	19 x 0,29	1,44	1,25
14	19 x 0,36	1,80	1,93
12	19 x 0,46	2,29	3,16
10	37 x 0,40	3,10	4,65

PG-THREAD – METRICAL THREAD

The interim period fro DIN 46320 „screwing for cables and conducting lines with PG-thread“ expired on 31.12.1999. Since then, screwing for cables and conducting lines had to comply with the national standard 46319 before this was replaced by EN50262 on 01.03.2001.

LINE-UP

PG-tread	metrical thread	Width across flat for screwed cable	max. width across flat/mm	max. edge size/mm
PG7	M12x1,5/M10x1,5	M12x1	16	18
PG9	M16x1,5	M16x1,5	21	23
PG11	M16x1,5	M23x1,5	25	28
PG13,5	M20x1,5			

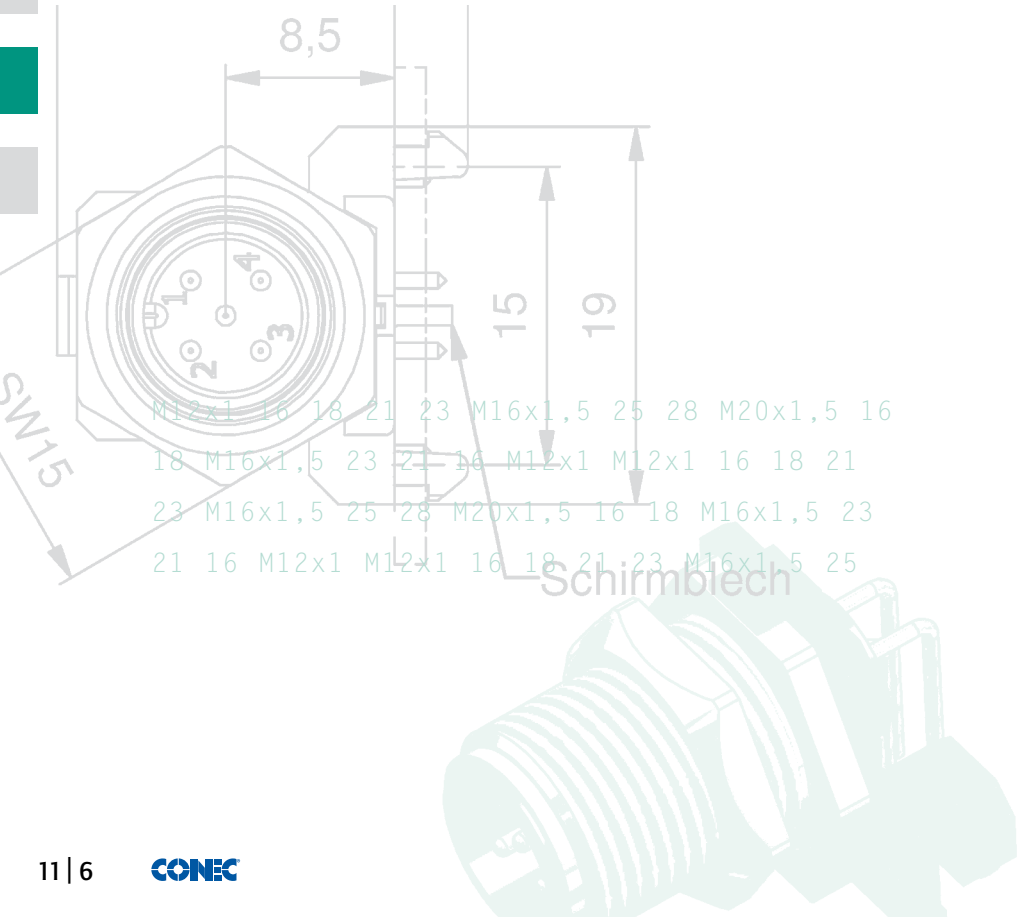

Voltage grading of connectors: Degree of pollution

The degree of pollution applies to the interface of the connection, that is to say the area, where female and male connector are connected. There are four grades in which connectors are classified. This depends to the pollution which can be expected.

In the area of circular connectors its Grade 3 in the majority of cases.

Pollution degree-Definition

Pollution degree	Definition
1	No pollution or only dry, non-conductive pollution occurs. The pollution has no influence.
2	Only non-conductive pollution occurs. Except that occasionally a temporary conductivity caused by condensation is to be expected.
3	Conductive pollution occurs or dry non-conductive pollution occurs which becomes conductive due to condensation which is to be expected.
4	The pollution generates persistent conductivity caused by conductive dust or by rain or snow.

Coding of M12x1-Connectors

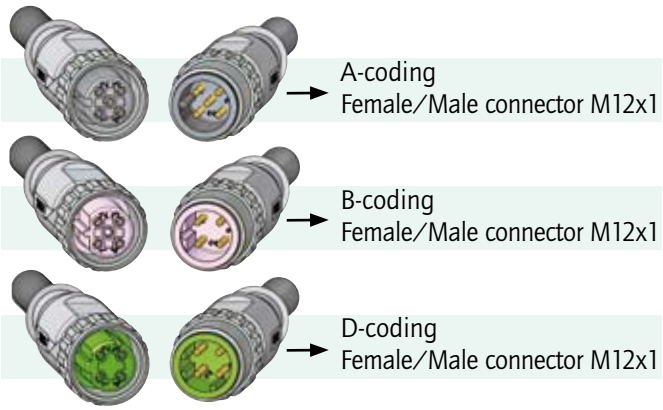

The coding of M12x1 circular connectors with a pin or a slot on the contact insert prevents identical connectors from beeing plugged into the wrong place.

A difference is drawn between the standard coding A, the B-coding (reverse key) for bus applications such as Profibus and the D-coding for Ethernet applications.

Section 12

Part Numbers

On the following pages you will find the CONEC catalogue program sorted by part numbers.

6658

66589

66589B 74

9B 75

6 589B 76

B 77

Part Numbers

Part-no.	Page	Part-no.	Page	Part-no.	Page	Part-no.	Page
41-00001	8|22	41-01047	8|7	41-01101	8|10	41-01154	8|13
41-00002	8|22	41-01048	8|8	41-01102	8|10	41-01155	8|13
41-00003	8|22	41-01049	8|8	41-01103	8|10	41-01156	8|13
41-00004	8|23	41-01050	8|8	41-01104	8|10	41-01157	8|13
41-00005	8|23	41-01051	8|8	41-01105	8|11	41-01158	8|13
41-00006	8|23	41-01052	8|8	41-01106	8|11	41-01159	8|13
41-01000	8|6	41-01053	8|8	41-01107	8|11	41-01160	8|13
41-01001	8|6	41-01054	8|8	41-01108	8|11	41-01161	8|10
41-01002	8|6	41-01055	8|8	41-01109	8|11	41-01162	8|10
41-01003	8|6	41-01056	8|9	41-01110	8|11	41-01163	8|10
41-01004	8|6	41-01057	8|9	41-01111	8|11	41-01164	8|10
41-01005	8|6	41-01058	8|9	41-01112	8|11	41-01165	8|10
41-01006	8|6	41-01059	8|9	41-01113	8|12	41-01166	8|10
41-01007	8|6	41-01060	8|9	41-01114	8|12	41-01167	8|10
41-01008	8|7	41-01061	8|9	41-01115	8|12	41-01168	8|10
41-01009	8|7	41-01062	8|9	41-01116	8|12	41-01169	8|11
41-01010	8|7	41-01063	8|9	41-01117	8|12	41-01170	8|11
41-01011	8|7	41-01064	8|6	41-01118	8|12	41-01171	8|11
41-01012	8|7	41-01065	8|6	41-01119	8|12	41-01172	8|11
41-01013	8|7	41-01066	8|6	41-01120	8|12	41-01173	8|11
41-01014	8|7	41-01067	8|6	41-01121	8|13	41-01174	8|11
41-01015	8|7	41-01068	8|6	41-01122	8|13	41-01175	8|11
41-01016	8|8	41-01069	8|6	41-01123	8|13	41-01176	8|11
41-01017	8|8	41-01070	8|6	41-01124	8|13	41-01177	8|12
41-01018	8|8	41-01071	8|6	41-01125	8|13	41-01178	8|12
41-01019	8|8	41-01072	8|7	41-01126	8|13	41-01179	8|12
41-01020	8|8	41-01073	8|7	41-01127	8|13	41-01180	8|12
41-01021	8|8	41-01074	8|7	41-01128	8|13	41-01181	8|12
41-01022	8|8	41-01075	8|7	41-01129	8|10	41-01182	8|12
41-01023	8|8	41-01076	8|7	41-01130	8|10	41-01183	8|12
41-01024	8|9	41-01077	8|7	41-01131	8|10	41-01184	8|12
41-01025	8|9	41-01078	8|7	41-01132	8|10	41-01185	8|13
41-01026	8|9	41-01079	8|7	41-01133	8|10	41-01186	8|13
41-01027	8|9	41-01080	8|8	41-01134	8|10	41-01187	8|13
41-01028	8|9	41-01081	8|8	41-01135	8|10	41-01188	8|13
41-01029	8|9	41-01082	8|8	41-01136	8|10	41-01189	8|13
41-01030	8|9	41-01083	8|8	41-01137	8|11	41-01190	8|13
41-01031	8|9	41-01084	8|8	41-01138	8|11	41-01191	8|13
41-01032	8|6	41-01085	8|8	41-01139	8|11	41-01192	8|13
41-01033	8|6	41-01086	8|8	41-01140	8|11	41-01193	8|14
41-01034	8|6	41-01087	8|8	41-01141	8|11	41-01194	8|14
41-01035	8|6	41-01088	8|9	41-01142	8|11	41-01195	8|14
41-01036	8|6	41-01089	8|9	41-01143	8|11	41-01196	8|14
41-01037	8|6	41-01090	8|9	41-01144	8|11	41-01197	8|14
41-01038	8|6	41-01091	8|9	41-01145	8|12	41-01198	8|14
41-01039	8|6	41-01092	8|9	41-01146	8|12	41-01199	8|14
41-01040	8|7	41-01093	8|9	41-01147	8|12	41-01200	8|14
41-01041	8|7	41-01094	8|9	41-01148	8|12	41-01201	8|16
41-01042	8|7	41-01095	8|9	41-01149	8|12	41-01202	8|16
41-01043	8|7	41-01097	8|10	41-01150	8|12	41-01203	8|16
41-01044	8|7	41-01098	8|10	41-01151	8|12	41-01204	8|16
41-01045	8|7	41-01099	8|10	41-01152	8|12	41-01205	8|16
41-01046	8|7	41-01100	8|10	41-01153	8|13	41-01206	8|16

Part-no.	Page
41-01207	8 | 16
41-01208	8 | 16
41-01209	8 | 14
41-01210	8 | 14
41-01211	8 | 14
41-01212	8 | 14
41-01213	8 | 14
41-01214	8 | 14
41-01215	8 | 14
41-01216	8 | 14
41-01217	8 | 16
41-01218	8 | 16
41-01219	8 | 16
41-01220	8 | 16
41-01221	8 | 16
41-01222	8 | 16
41-01223	8 | 16
41-01224	8 | 16
41-01225	8 | 15
41-01226	8 | 15
41-01227	8 | 15
41-01228	8 | 15
41-01229	8 | 15
41-01230	8 | 15
41-01231	8 | 15
41-01232	8 | 15
41-01233	8 | 17
41-01234	8 | 17
41-01235	8 | 17
41-01236	8 | 17
41-01237	8 | 17
41-01238	8 | 17
41-01239	8 | 17
41-01240	8 | 17
41-01241	8 | 18
41-01242	8 | 18
41-01243	8 | 18
41-01244	8 | 18
41-01245	8 | 18
41-01246	8 | 18
41-01247	8 | 18
41-01248	8 | 18
41-01249	8 | 20
41-01250	8 | 20
41-01251	8 | 20
41-01252	8 | 20
41-01253	8 | 20
41-01254	8 | 20
41-01255	8 | 20
41-01256	8 | 20
41-01257	8 | 18
41-01258	8 | 18
41-01259	8 | 18

Part-no.	Page
41-01260	8 | 18
41-01261	8 | 18
41-01262	8 | 18
41-01263	8 | 18
41-01264	8 | 18
41-01265	8 | 20
41-01266	8 | 20
41-01267	8 | 20
41-01268	8 | 20
41-01269	8 | 20
41-01270	8 | 20
41-01271	8 | 20
41-01272	8 | 20
41-01273	8 | 19
41-01274	8 | 19
41-01275	8 | 19
41-01276	8 | 19
41-01277	8 | 19
41-01278	8 | 19
41-01279	8 | 19
41-01280	8 | 19
41-01281	8 | 21
41-01282	8 | 21
41-01283	8 | 21
41-01284	8 | 21
41-01285	8 | 21
41-01286	8 | 21
41-01287	8 | 21
41-01288	8 | 21
41-50000	9 | 10
41-50002	9 | 11
41-51000	9 | 6
41-51001	9 | 6
41-51002	9 | 6
41-51003	9 | 6
41-51004	9 | 7
41-51005	9 | 7
41-51006	9 | 7
41-51007	9 | 7
41-51008	9 | 8
41-51009	9 | 8
41-51010	9 | 8
41-51011	9 | 8
41-51012	9 | 9
41-51013	9 | 9
41-51014	9 | 9
41-51015	9 | 9
42-05000	4 | 16
42-05001	4 | 16
42-05002	4 | 17
42-05003	4 | 17
42-05006	4 | 14
42-05007	4 | 14

Part-no.	Page
42-05008	4 | 15
42-05009	4 | 15
42-05010	4 | 18
42-05011	4 | 19
42-10000	7 | 4
42-10001	7 | 4
42-10002	7 | 4
42-10003	7 | 4
42-10004	7 | 4
42-10005	7 | 4
42-10006	7 | 4
42-10007	7 | 4
42-10008	7 | 5
42-10009	7 | 5
42-10010	7 | 5
42-10011	7 | 5
42-10012	7 | 5
42-10013	7 | 5
42-10014	7 | 5
42-10015	7 | 5
42-10016	7 | 6
42-10017	7 | 6
42-10018	7 | 6
42-10019	7 | 6
42-10020	7 | 6
42-10021	7 | 6
42-10022	7 | 6
42-10023	7 | 6
42-10024	7 | 7
42-10025	7 | 7
42-10026	7 | 7
42-10027	7 | 7
42-10028	7 | 7
42-10029	7 | 7
42-10030	7 | 7
42-10031	7 | 7
42-10032	7 | 4
42-10033	7 | 4
42-10034	7 | 4
42-10035	7 | 4
42-10036	7 | 4
42-10037	7 | 4
42-10038	7 | 4
42-10039	7 | 4
42-10040	7 | 5
42-10041	7 | 5
42-10042	7 | 5
42-10043	7 | 5
42-10044	7 | 5
42-10045	7 | 5
42-10046	7 | 5
42-10047	7 | 5
42-10048	7 | 6

Part-no.	Page
42-10049	7 | 6
42-10050	7 | 6
42-10051	7 | 6
42-10052	7 | 6
42-10053	7 | 6
42-10054	7 | 6
42-10055	7 | 6
42-10056	7 | 7
42-10057	7 | 7
42-10058	7 | 7
42-10059	7 | 7
42-10060	7 | 7
42-10061	7 | 7
42-10062	7 | 7
42-10063	7 | 7
42-10064	7 | 8
42-10065	7 | 8
42-10066	7 | 8
42-10067	7 | 8
42-10068	7 | 8
42-10069	7 | 8
42-10070	7 | 8
42-10071	7 | 8
42-10072	7 | 9
42-10073	7 | 9
42-10074	7 | 9
42-10075	7 | 9
42-10076	7 | 9
42-10077	7 | 9
42-10078	7 | 9
42-10079	7 | 9
42-10080	7 | 10
42-10081	7 | 10
42-10082	7 | 10
42-10083	7 | 10
42-10084	7 | 10
42-10085	7 | 10
42-10086	7 | 10
42-10087	7 | 10
42-10088	7 | 11
42-10089	7 | 11
42-10090	7 | 11
42-10091	7 | 11
42-10092	7 | 11
42-10093	7 | 11
42-10094	7 | 11
42-10095	7 | 11
42-10096	7 | 8
42-10097	7 | 8
42-10098	7 | 8
42-10099	7 | 8
42-10100	7 | 8
42-10101	7 | 8

Part Numbers

Part-no.	Page	Part-no.	Page	Part-no.	Page	Part-no.	Page
42-10102	7 | 8	42-10169	7 | 13	43-00018	2 | 6	43-01018	5 | 32
42-10103	7 | 8	42-10170	7 | 13	43-00019	2 | 6	43-01019	5 | 32
42-10104	7 | 9	42-10171	7 | 13	43-00020	2 | 6	43-01020	5 | 34
42-10105	7 | 9	42-10172	7 | 13	43-00021	2 | 7	43-01021	5 | 34
42-10106	7 | 9	42-10173	7 | 14	43-00022	2 | 7	43-01022	5 | 14
42-10107	7 | 9	42-10174	7 | 14	43-00023	2 | 7	43-01023	5 | 14
42-10108	7 | 9	42-10175	7 | 14	43-00024	2 | 7	43-01024	5 | 16
42-10109	7 | 9	42-10176	7 | 14	43-00025	2 | 10	43-01025	5 | 16
42-10110	7 | 9	42-10177	7 | 14	43-00026	2 | 10	43-01026	3 | 16
42-10111	7 | 9	42-10178	7 | 14	43-00027	2 | 10	43-01027	3 | 16
42-10112	7 | 10	42-10179	7 | 14	43-00028	2 | 10	43-01028	3 | 16
42-10113	7 | 10	42-10180	7 | 14	43-00029	2 | 11	43-01029	3 | 16
42-10114	7 | 10	42-10181	7 | 15	43-00030	2 | 11	43-01030	3 | 16
42-10115	7 | 10	42-10182	7 | 15	43-00031	2 | 11	43-01031	3 | 16
42-10116	7 | 10	42-10183	7 | 15	43-00032	2 | 11	43-01032	3 | 18
42-10117	7 | 10	42-10184	7 | 15	43-00040	2 | 12	43-01033	3 | 18
42-10118	7 | 10	42-10185	7 | 15	43-00041	2 | 12	43-01034	3 | 18
42-10119	7 | 10	42-10186	7 | 15	43-00042	2 | 12	43-01035	3 | 18
42-10120	7 | 11	42-10187	7 | 15	43-00043	2 | 12	43-01036	3 | 18
42-10121	7 | 11	42-10188	7 | 15	43-00044	2 | 13	43-01037	3 | 18
42-10122	7 | 11	42-10189	7 | 14	43-00045	2 | 13	43-01038	5 | 18
42-10123	7 | 11	42-10190	7 | 14	43-00046	2 | 13	43-01039	5 | 18
42-10124	7 | 11	42-10191	7 | 14	43-00047	2 | 13	43-01040	5 | 20
42-10125	7 | 11	42-10192	7 | 14	43-00048	2 | 14	43-01041	5 | 20
42-10126	7 | 11	42-10193	7 | 14	43-00049	2 | 14	43-01042	6 | 20
42-10127	7 | 11	42-10194	7 | 14	43-00050	2 | 14	43-01043	6 | 22
42-10129	11 | 1	42-10195	7 | 14	43-00051	2 | 14	43-01044	6 | 48
42-10141	7 | 12	42-10196	7 | 14	43-00052	2 | 15	43-01045	3 | 4
42-10142	7 | 12	42-10197	7 | 15	43-00053	2 | 15	43-01046	5 | 14
42-10143	7 | 12	42-10198	7 | 15	43-00054	2 | 15	43-01047	5 | 32
42-10144	7 | 12	42-10199	7 | 15	43-00055	2 | 15	43-01048	3 | 12
42-10145	7 | 12	42-10200	7 | 15	43-00073	6 | 16	43-01049	3 | 6
42-10146	7 | 12	42-10201	7 | 15	43-00075	6 | 17	43-01050	5 | 16
42-10147	7 | 12	42-10202	7 | 15	43-00077	6 | 18	43-01051	5 | 34
42-10148	7 | 12	42-10203	7 | 15	43-00079	6 | 19	43-01052	3 | 14
42-10151	7 | 13	42-10204	7 | 15	43-01000	3 | 4	43-01053	3 | 8
42-10152	7 | 13	43-00001	2 | 4	43-01001	3 | 4	43-01054	3 | 10
42-10153	7 | 13	43-00002	2 | 4	43-01002	3 | 4	43-01059	3 | 17
42-10154	7 | 13	43-00003	2 | 4	43-01003	3 | 12	43-01060	3 | 17
42-10155	7 | 13	43-00004	2 | 4	43-01004	3 | 12	43-01061	3 | 17
42-10156	7 | 13	43-00005	2 | 5	43-01005	3 | 12	43-01062	3 | 17
42-10157	7 | 12	43-00006	2 | 5	43-01006	3 | 8	43-01063	3 | 17
42-10158	7 | 12	43-00007	2 | 5	43-01007	3 | 8	43-01064	3 | 17
42-10159	7 | 12	43-00008	2 | 5	43-01008	3 | 8	43-01065	3 | 19
42-10160	7 | 12	43-00009	2 | 8	43-01009	3 | 6	43-01066	3 | 19
42-10161	7 | 12	43-00010	2 | 8	43-01010	3 | 6	43-01069	3 | 19
42-10162	7 | 12	43-00011	2 | 8	43-01011	3 | 6	43-01070	3 | 19
42-10163	7 | 12	43-00012	2 | 8	43-01012	3 | 14	43-01071	3 | 19
42-10164	7 | 12	43-00013	2 | 9	43-01013	3 | 14	43-01072	3 | 19
42-10165	7 | 13	43-00014	2 | 9	43-01014	3 | 14	43-01073	3 | 5
42-10166	7 | 13	43-00015	2 | 9	43-01015	3 | 10	43-01074	3 | 5
42-10167	7 | 13	43-00016	2 | 9	43-01016	3 | 10	43-01075	3 | 5
42-10168	7 | 13	43-00017	2 | 6	43-01017	3 | 10	43-01076	5 | 15

Part-no.	Page
43-01077	5 | 15
43-01078	5 | 15
43-01079	3 | 13
43-01080	3 | 13
43-01081	3 | 13
43-01082	3 | 7
43-01083	3 | 7
43-01084	3 | 7
43-01085	5 | 17
43-01086	5 | 17
43-01087	5 | 17
43-01088	3 | 15
43-01089	3 | 15
43-01090	3 | 15
43-01091	3 | 9
43-01092	3 | 9
43-01093	3 | 9
43-01094	3 | 11
43-01095	3 | 11
43-01096	3 | 11
43-01097	3 | 5
43-01098	3 | 13
43-01099	3 | 7
43-01100	3 | 15
43-01101	3 | 9
43-01102	3 | 11
43-01103	5 | 33
43-01104	5 | 33
43-01105	5 | 33
43-01106	5 | 35
43-01107	5 | 35
43-01108	5 | 35
43-01109	6 | 21
43-01110	6 | 23
43-01111	6 | 49
43-01112	5 | 19
43-01113	5 | 19
43-01114	5 | 21
43-01115	5 | 21
43-01118	6 | 50
43-01123	6 | 24
43-01124	6 | 24
43-01125	6 | 26
43-01126	6 | 26
43-01127	5 | 18
43-01128	5 | 20
43-01135	5 | 19
43-01136	5 | 21
43-01155	3 | 4, 6, 8, 10
43-01155	5 | 14, 16, 18, 20
43-01155	6 | 20, 22, 48
43-01156	3 | 5, 7, 9, 11
43-01156	5 | 15, 17, 19, 21

Part-no.	Page
43-01156	6 | 21, 23, 49
43-01157	6 | 50
43-01162	3 | 21
43-01163	3 | 21
43-01164	3 | 21
43-01165	3 | 21
43-01166	3 | 23
43-01167	3 | 23
43-01168	3 | 23
43-01169	3 | 23
43-01170	3 | 25
43-01171	3 | 25
43-01172	3 | 25
43-01173	3 | 25
43-01174	3 | 27
43-01175	3 | 27
43-01176	3 | 27
43-01177	3 | 27
43-01178	3 | 20
43-01179	3 | 20
43-01180	3 | 20
43-01181	3 | 20
43-01182	3 | 22
43-01183	3 | 22
43-01184	3 | 22
43-01185	3 | 22
43-01186	3 | 24
43-01187	3 | 24
43-01188	3 | 24
43-01189	3 | 24
43-01190	3 | 26
43-01191	3 | 26
43-01192	3 | 26
43-01193	3 | 26
43-01196	3 | 30
43-01197	3 | 30
43-01198	3 | 30
43-01199	3 | 30
43-01200	3 | 28
43-01201	3 | 28
43-01202	3 | 28
43-01203	3 | 28
43-01204	3 | 31
43-01205	3 | 31
43-01206	3 | 31
43-01207	3 | 31
43-01208	3 | 29
43-01209	3 | 29
43-01210	3 | 29
43-01211	3 | 29
43-01212	6 | 29
43-01213	6 | 33
43-01214	6 | 31

Part-no.	Page
43-01215	6 | 35
43-01216	6 | 28
43-01217	6 | 32
43-01218	6 | 30
43-01219	6 | 34
43-01220	6 | 53
43-01221	6 | 56
43-01222	6 | 52
43-01223	6 | 55
43-01224	6 | 36
43-01225	6 | 38
43-01226	6 | 37
43-01227	6 | 39
43-01228	6 | 54
43-01229	6 | 57
43-01236	6 | 51
43-01248	6 | 51
43-01249	6 | 25
43-01250	6 | 25
43-01251	6 | 27
43-01252	6 | 27
43-05000	5 | 39
43-05001	5 | 39
43-05002	5 | 37
43-05003	5 | 37
43-05004	5 | 38
43-05005	5 | 36
43-05010	4 | 10
43-05011	4 | 10
43-05012	4 | 11
43-05013	4 | 11
43-05014	4 | 12
43-05015	4 | 13
43-05100	4 | 7
43-05101	4 | 6
43-05103	4 | 8
43-10000	1 | 4
43-10001	1 | 4
43-10002	1 | 4
43-10003	1 | 4
43-10012	1 | 4
43-10013	1 | 4
43-10014	1 | 4
43-10015	1 | 4
43-10016	1 | 4
43-10017	1 | 4
43-10018	1 | 4
43-10019	1 | 4
43-10020	1 | 4
43-10021	1 | 4
43-10022	1 | 4
43-10023	1 | 4
43-10032	1 | 4

Part-no.	Page
43-10033	1 | 4
43-10034	1 | 4
43-10035	1 | 4
43-10036	1 | 4
43-10037	1 | 4
43-10038	1 | 4
43-10039	1 | 4
43-10040	1 | 4
43-10041	1 | 4
43-10042	1 | 4
43-10043	1 | 4
43-10052	1 | 4
43-10053	1 | 4
43-10054	1 | 4
43-10055	1 | 4
43-10056	1 | 4
43-10057	1 | 4
43-10058	1 | 4
43-10059	1 | 4
43-10060	1 | 5
43-10061	1 | 5
43-10062	1 | 5
43-10063	1 | 5
43-10072	1 | 5
43-10073	1 | 5
43-10074	1 | 5
43-10075	1 | 5
43-10084	1 | 7
43-10085	1 | 7
43-10086	1 | 7
43-10087	1 | 7
43-10096	1 | 7
43-10097	1 | 7
43-10098	1 | 7
43-10099	1 | 7
43-10100	1 | 7
43-10101	1 | 7
43-10102	1 | 7
43-10103	1 | 7
43-10104	1 | 7
43-10105	1 | 7
43-10106	1 | 7
43-10107	1 | 7
43-10116	1 | 7
43-10117	1 | 7
43-10118	1 | 7
43-10119	1 | 7
43-10120	1 | 7
43-10121	1 | 7
43-10122	1 | 7
43-10123	1 | 7
43-10124	1 | 7
43-10125	1 | 7

Part Numbers

Part-no.	Page	Part-no.	Page	Part-no.	Page	Part-no.	Page
43-10126	1 | 7	43-10227	1 | 10	43-10336	1 | 16	43-10425	1 | 15
43-10127	1 | 7	43-10228	1 | 11	43-10337	1 | 16	43-10426	1 | 15
43-10136	1 | 7	43-10229	1 | 11	43-10338	1 | 16	43-10427	1 | 15
43-10137	1 | 7	43-10230	1 | 11	43-10339	1 | 16	43-10436	1 | 15
43-10138	1 | 7	43-10231	1 | 11	43-10340	1 | 16	43-10437	1 | 15
43-10139	1 | 7	43-10240	1 | 11	43-10341	1 | 16	43-10438	1 | 15
43-10140	1 | 7	43-10241	1 | 11	43-10342	1 | 16	43-10439	1 | 15
43-10141	1 | 7	43-10242	1 | 11	43-10343	1 | 16	43-10440	1 | 15
43-10142	1 | 7	43-10243	1 | 11	43-10344	1 | 16	43-10441	1 | 15
43-10143	1 | 7	43-10252	1 | 12	43-10345	1 | 16	43-10442	1 | 15
43-10144	1 | 8	43-10253	1 | 12	43-10346	1 | 16	43-10443	1 | 15
43-10145	1 | 8	43-10254	1 | 12	43-10347	1 | 16	43-10444	1 | 15
43-10146	1 | 8	43-10255	1 | 12	43-10348	1 | 16	43-10445	1 | 15
43-10147	1 | 8	43-10264	1 | 12	43-10349	1 | 16	43-10446	1 | 15
43-10156	1 | 8	43-10265	1 | 12	43-10350	1 | 16	43-10447	1 | 15
43-10157	1 | 8	43-10266	1 | 12	43-10351	1 | 16	43-10456	1 | 15
43-10158	1 | 8	43-10267	1 | 12	43-10352	1 | 18	43-10457	1 | 15
43-10159	1 | 8	43-10268	1 | 12	43-10353	1 | 18	43-10458	1 | 15
43-10168	1 | 10	43-10269	1 | 12	43-10354	1 | 18	43-10459	1 | 15
43-10169	1 | 10	43-10270	1 | 12	43-10355	1 | 18	43-10460	1 | 15
43-10170	1 | 10	43-10271	1 | 12	43-10356	1 | 18	43-10461	1 | 15
43-10171	1 | 10	43-10272	1 | 12	43-10357	1 | 18	43-10462	1 | 15
43-10180	1 | 10	43-10273	1 | 12	43-10358	1 | 18	43-10463	1 | 15
43-10181	1 | 10	43-10274	1 | 12	43-10359	1 | 18	43-10480	5 | 8
43-10182	1 | 10	43-10275	1 | 12	43-10360	1 | 18	43-10481	5 | 8
43-10183	1 | 10	43-10284	1 | 12	43-10361	1 | 18	43-10482	5 | 8
43-10184	1 | 10	43-10285	1 | 12	43-10362	1 | 18	43-10483	5 | 8
43-10185	1 | 10	43-10286	1 | 12	43-10363	1 | 18	43-10484	5 | 8
43-10186	1 | 10	43-10287	1 | 12	43-10364	1 | 18	43-10485	5 | 8
43-10187	1 | 10	43-10288	1 | 12	43-10365	1 | 18	43-10486	5 | 8
43-10188	1 | 10	43-10289	1 | 12	43-10366	1 | 18	43-10487	5 | 8
43-10189	1 | 10	43-10290	1 | 12	43-10367	1 | 18	43-10488	5 | 9
43-10190	1 | 10	43-10291	1 | 12	43-10368	1 | 14	43-10489	5 | 9
43-10191	1 | 10	43-10292	1 | 12	43-10369	1 | 14	43-10490	5 | 9
43-10200	1 | 10	43-10293	1 | 12	43-10370	1 | 14	43-10491	5 | 9
43-10201	1 | 10	43-10294	1 | 12	43-10371	1 | 14	43-10492	5 | 9
43-10202	1 | 10	43-10295	1 | 12	43-10380	1 | 14	43-10493	5 | 9
43-10203	1 | 10	43-10304	1 | 12	43-10381	1 | 14	43-10494	5 | 9
43-10204	1 | 10	43-10305	1 | 12	43-10382	1 | 14	43-10495	5 | 9
43-10205	1 | 10	43-10306	1 | 12	43-10383	1 | 14	43-10496	5 | 10
43-10206	1 | 10	43-10307	1 | 12	43-10392	1 | 32	43-10497	5 | 10
43-10207	1 | 10	43-10308	1 | 12	43-10393	1 | 32	43-10498	5 | 10
43-10208	1 | 10	43-10309	1 | 12	43-10394	1 | 32	43-10499	5 | 10
43-10209	1 | 10	43-10310	1 | 12	43-10395	1 | 32	43-10500	5 | 10
43-10210	1 | 10	43-10311	1 | 12	43-10404	1 | 32	43-10501	5 | 10
43-10211	1 | 10	43-10312	1 | 13	43-10405	1 | 32	43-10502	5 | 10
43-10220	1 | 10	43-10313	1 | 13	43-10406	1 | 32	43-10503	5 | 10
43-10221	1 | 10	43-10314	1 | 13	43-10407	1 | 32	43-10504	5 | 11
43-10222	1 | 10	43-10315	1 | 13	43-10416	1 | 33	43-10505	5 | 11
43-10223	1 | 10	43-10324	1 | 13	43-10417	1 | 33	43-10506	5 | 11
43-10224	1 | 10	43-10325	1 | 13	43-10418	1 | 33	43-10507	5 | 11
43-10225	1 | 10	43-10326	1 | 13	43-10419	1 | 33	43-10508	5 | 11
43-10226	1 | 10	43-10327	1 | 13	43-10424	1 | 15	43-10509	5 | 11

Part-no.	Page
43-10510	5 | 11
43-10511	5 | 11
43-10512	5 | 22
43-10513	5 | 22
43-10514	5 | 22
43-10515	5 | 22
43-10516	5 | 22
43-10517	5 | 22
43-10518	5 | 22
43-10519	5 | 22
43-10520	5 | 23
43-10521	5 | 23
43-10522	5 | 23
43-10523	5 | 23
43-10524	5 | 23
43-10525	5 | 23
43-10526	5 | 23
43-10527	5 | 23
43-10528	5 | 24
43-10529	5 | 24
43-10530	5 | 24
43-10531	5 | 24
43-10532	5 | 24
43-10533	5 | 24
43-10534	5 | 24
43-10535	5 | 24
43-10536	5 | 25
43-10537	5 | 25
43-10538	5 | 25
43-10539	5 | 25
43-10540	5 | 25
43-10541	5 | 25
43-10542	5 | 25
43-10543	5 | 25
43-10544	1 | 20
43-10545	1 | 20
43-10546	1 | 20
43-10547	1 | 20
43-10556	1 | 20
43-10557	1 | 20
43-10558	1 | 20
43-10559	1 | 20
43-10560	1 | 20
43-10561	1 | 20
43-10562	1 | 20
43-10563	1 | 20
43-10564	1 | 20
43-10565	1 | 20
43-10566	1 | 20
43-10567	1 | 20
43-10576	1 | 20
43-10577	1 | 20
43-10578	1 | 20

Part-no.	Page
43-10579	1 | 20
43-10580	1 | 20
43-10581	1 | 20
43-10582	1 | 20
43-10583	1 | 20
43-10584	1 | 21
43-10585	1 | 21
43-10586	1 | 21
43-10587	1 | 21
43-10596	1 | 22
43-10597	1 | 22
43-10598	1 | 22
43-10599	1 | 22
43-10608	1 | 23
43-10609	1 | 23
43-10610	1 | 23
43-10611	1 | 23
43-10620	1 | 23
43-10621	1 | 23
43-10622	1 | 23
43-10623	1 | 23
43-10624	1 | 23
43-10625	1 | 23
43-10626	1 | 23
43-10627	1 | 23
43-10628	1 | 23
43-10629	1 | 23
43-10630	1 | 23
43-10631	1 | 23
43-10640	1 | 23
43-10641	1 | 23
43-10642	1 | 23
43-10643	1 | 23
43-10644	1 | 23
43-10645	1 | 23
43-10646	1 | 23
43-10647	1 | 23
43-10648	1 | 24
43-10649	1 | 24
43-10650	1 | 24
43-10651	1 | 24
43-10660	1 | 25
43-10661	1 | 25
43-10662	1 | 25
43-10663	1 | 25
43-10672	1 | 21
43-10673	1 | 21
43-10674	1 | 21
43-10675	1 | 21
43-10676	1 | 21
43-10677	1 | 21
43-10678	1 | 21
43-10679	1 | 21

Part-no.	Page
43-10680	1 | 24
43-10681	1 | 24
43-10682	1 | 24
43-10683	1 | 24
43-10684	1 | 24
43-10685	1 | 24
43-10686	1 | 24
43-10687	1 | 24
43-10688	1 | 26
43-10689	1 | 26
43-10690	1 | 26
43-10691	1 | 26
43-10700	1 | 26
43-10701	1 | 26
43-10702	1 | 26
43-10703	1 | 26
43-10704	1 | 26
43-10705	1 | 26
43-10706	1 | 26
43-10707	1 | 26
43-10708	1 | 26
43-10709	1 | 26
43-10710	1 | 26
43-10711	1 | 26
43-10720	1 | 26
43-10721	1 | 26
43-10722	1 | 26
43-10723	1 | 26
43-10724	1 | 26
43-10725	1 | 26
43-10726	1 | 26
43-10727	1 | 26
43-10728	1 | 28
43-10729	1 | 28
43-10730	1 | 28
43-10731	1 | 28
43-10740	1 | 29
43-10741	1 | 29
43-10742	1 | 29
43-10743	1 | 29
43-10752	1 | 29
43-10753	1 | 29
43-10754	1 | 29
43-10755	1 | 29
43-10756	1 | 29
43-10757	1 | 29
43-10758	1 | 29
43-10759	1 | 29
43-10760	1 | 29
43-10761	1 | 29
43-10762	1 | 29
43-10763	1 | 29
43-10772	1 | 29

Part-no.	Page
43-10773	1 | 29
43-10774	1 | 29
43-10775	1 | 29
43-10776	1 | 29
43-10777	1 | 29
43-10778	1 | 29
43-10779	1 | 29
43-10780	1 | 30
43-10781	1 | 30
43-10782	1 | 30
43-10783	1 | 30
43-10792	1 | 30
43-10793	1 | 30
43-10794	1 | 30
43-10795	1 | 30
43-10796	1 | 30
43-10797	1 | 30
43-10798	1 | 30
43-10799	1 | 30
43-10800	1 | 31
43-10801	1 | 31
43-10802	1 | 31
43-10803	1 | 31
43-10812	1 | 34
43-10813	1 | 34
43-10814	1 | 34
43-10815	1 | 34
43-10820	1 | 34
43-10821	1 | 34
43-10822	1 | 34
43-10823	1 | 34
43-10824	1 | 34
43-10825	1 | 34
43-10826	1 | 34
43-10827	1 | 34
43-10832	1 | 34
43-10833	1 | 34
43-10834	1 | 34
43-10835	1 | 34
43-10840	1 | 33
43-10841	1 | 33
43-10842	1 | 33
43-10843	1 | 33
43-10844	1 | 33
43-10845	1 | 33
43-10846	1 | 33
43-10847	1 | 33
43-10848	1 | 33
43-10849	1 | 33
43-10850	1 | 33
43-10851	1 | 33
43-10860	1 | 33
43-10861	1 | 33

Part Numbers

Part-no.	Page	Part-no.	Page	Part-no.	Page	Part-no.	Page
43-10862	1 | 33	43-10915	5 | 13	43-10976	1 | 17	43-11063	1 | 8
43-10863	1 | 33	43-10916	5 | 28	43-10977	1 | 17	43-11064	1 | 8
43-10864	1 | 33	43-10917	5 | 28	43-10978	1 | 17	43-11065	1 | 8
43-10865	1 | 33	43-10918	5 | 28	43-10979	1 | 17	43-11066	1 | 25
43-10866	1 | 33	43-10919	5 | 28	43-10980	1 | 19	43-11067	1 | 25
43-10867	1 | 33	43-10920	5 | 28	43-10981	1 | 19	43-11068	1 | 25
43-10868	1 | 14	43-10921	5 | 28	43-10982	1 | 19	43-11069	1 | 25
43-10869	1 | 14	43-10922	5 | 28	43-10983	1 | 19	43-11070	1 | 21
43-10870	1 | 14	43-10923	5 | 28	43-10984	1 | 19	43-11071	1 | 21
43-10871	1 | 14	43-10924	5 | 29	43-10985	1 | 19	43-11072	1 | 21
43-10872	1 | 14	43-10925	5 | 29	43-10986	1 | 19	43-11073	1 | 21
43-10873	1 | 14	43-10926	5 | 29	43-10987	1 | 19	43-11074	1 | 31
43-10874	1 | 14	43-10927	5 | 29	43-10988	1 | 35	43-11075	1 | 31
43-10875	1 | 14	43-10928	5 | 29	43-10989	1 | 35	43-11076	1 | 31
43-10876	1 | 14	43-10929	5 | 29	43-10990	1 | 35	43-11077	1 | 31
43-10877	1 | 14	43-10930	5 | 29	43-10991	1 | 35	43-11078	1 | 21
43-10878	1 | 14	43-10931	5 | 29	43-10992	1 | 35	43-11079	1 | 21
43-10879	1 | 14	43-10932	6 | 12	43-10993	1 | 35	43-11080	1 | 21
43-10880	1 | 14	43-10933	6 | 12	43-10994	1 | 35	43-11081	1 | 21
43-10881	1 | 14	43-10934	6 | 12	43-10995	1 | 35	43-11082	1 | 27
43-10882	1 | 14	43-10935	6 | 12	43-11030	1 | 13	43-11083	1 | 27
43-10883	1 | 14	43-10936	6 | 13	43-11031	1 | 13	43-11084	1 | 27
43-10884	1 | 32	43-10937	6 | 13	43-11032	1 | 13	43-11085	1 | 27
43-10885	1 | 32	43-10938	6 | 13	43-11033	1 | 13	43-11086	1 | 27
43-10886	1 | 32	43-10939	6 | 13	43-11034	1 | 5	43-11087	1 | 27
43-10887	1 | 32	43-10940	6 | 14	43-11035	1 | 5	43-11088	1 | 27
43-10888	1 | 32	43-10941	6 | 14	43-11036	1 | 5	43-11089	1 | 27
43-10889	1 | 32	43-10942	6 | 14	43-11037	1 | 5	43-11090	1 | 24
43-10890	1 | 32	43-10943	6 | 14	43-11038	1 | 5	43-11091	1 | 24
43-10891	1 | 32	43-10944	6 | 46	43-11039	1 | 5	43-11092	1 | 24
43-10892	1 | 32	43-10945	6 | 46	43-11040	1 | 5	43-11093	1 | 24
43-10893	1 | 32	43-10946	6 | 46	43-11041	1 | 5	43-11094	1 | 24
43-10894	1 | 32	43-10947	6 | 46	43-11042	1 | 13	43-11095	1 | 24
43-10895	1 | 32	43-10948	6 | 47	43-11043	1 | 13	43-11096	1 | 24
43-10896	1 | 32	43-10949	6 | 47	43-11044	1 | 13	43-11097	1 | 24
43-10897	1 | 32	43-10950	6 | 47	43-11045	1 | 13	43-11098	1 | 30
43-10898	1 | 32	43-10951	6 | 47	43-11046	1 | 11	43-11099	1 | 30
43-10899	1 | 32	43-10952	1 | 27	43-11047	1 | 11	43-11100	1 | 30
43-10900	5 | 12	43-10953	1 | 27	43-11048	1 | 11	43-11101	1 | 30
43-10901	5 | 12	43-10954	1 | 27	43-11049	1 | 11	43-11102	1 | 30
43-10902	5 | 12	43-10955	1 | 27	43-11050	1 | 11	43-11103	1 | 30
43-10903	5 | 12	43-10964	1 | 27	43-11051	1 | 11	43-11104	1 | 30
43-10904	5 | 12	43-10965	1 | 27	43-11052	1 | 11	43-11105	1 | 30
43-10905	5 | 12	43-10966	1 | 27	43-11053	1 | 11	43-11106	1 | 28
43-10906	5 | 12	43-10967	1 | 27	43-11054	1 | 22	43-11107	1 | 28
43-10907	5 | 12	43-10968	1 | 27	43-11055	1 | 22	43-11108	1 | 28
43-10908	5 | 13	43-10969	1 | 27	43-11056	1 | 22	43-11109	1 | 28
43-10909	5 | 13	43-10970	1 | 27	43-11057	1 | 22	43-11210	6 | 15
43-10910	5 | 13	43-10971	1 | 27	43-11058	1 | 8	43-11228	6 | 14
43-10911	5 | 13	43-10972	1 | 17	43-11059	1 | 8	43-11264	1 | 6
43-10912	5 | 13	43-10973	1 | 17	43-11060	1 | 8	43-11265	1 | 6
43-10913	5 | 13	43-10974	1 | 17	43-11061	1 | 8	43-11266	1 | 6
43-10914	5 | 13	43-10975	1 | 17	43-11062	1 | 8	43-11267	1 | 6

Part-no.	Page
43-11268	1 | 6
43-11269	1 | 6
43-11270	1 | 6
43-11271	1 | 6
43-11272	1 | 9
43-11273	1 | 9
43-11274	1 | 9
43-11275	1 | 9
43-11276	1 | 9
43-11277	1 | 9
43-11278	1 | 9
43-11279	1 | 9
43-11280	1 | 17
43-11281	1 | 17
43-11282	1 | 17
43-11283	1 | 17
43-11284	1 | 17
43-11285	1 | 17
43-11286	1 | 17
43-11287	1 | 17
43-11288	1 | 19
43-11289	1 | 19
43-11290	1 | 19
43-11291	1 | 19
43-11292	1 | 19
43-11293	1 | 19
43-11294	1 | 19
43-11295	1 | 19
43-11311	6 | 43
43-11357	11 | 1
43-11358	11 | 1
43-11359	11 | 1
43-11430	1 | 36
43-11431	1 | 36
43-11432	1 | 36
43-11433	1 | 36
43-11434	1 | 36
43-11435	1 | 36
43-11436	1 | 36
43-11437	1 | 36
43-11438	1 | 37
43-11439	1 | 37
43-11440	1 | 37
43-11441	1 | 37
43-11442	1 | 37
43-11443	1 | 37
43-11444	1 | 37
43-11445	1 | 37
43-11446	1 | 38
43-11447	1 | 38
43-11448	1 | 38
43-11449	1 | 38
43-11450	1 | 38

Part-no.	Page
43-11451	1 | 38
43-11452	1 | 38
43-11453	1 | 38
43-11454	1 | 39
43-11455	1 | 39
43-11456	1 | 39
43-11457	1 | 39
43-11458	1 | 39
43-11459	1 | 39
43-11460	1 | 39
43-11461	1 | 39
43-11520	6 | 44
43-11601	6 | 12
43-11602	6 | 12
43-11603	6 | 12
43-11604	6 | 12
43-11605	6 | 12
43-11606	6 | 12
43-11607	6 | 12
43-11608	6 | 12
43-11609	6 | 13
43-11610	6 | 13
43-11611	6 | 13
43-11612	6 | 13
43-11613	6 | 13
43-11614	6 | 13
43-11615	6 | 13
43-11616	6 | 13
43-11617	6 | 14
43-11618	6 | 14
43-11619	6 | 14
43-11620	6 | 14
43-11621	6 | 14
43-11622	6 | 14
43-11623	6 | 14
43-11632	5 | 26
43-11633	5 | 26
43-11634	5 | 26
43-11635	5 | 26
43-11636	5 | 27
43-11637	5 | 27
43-11638	5 | 27
43-11639	5 | 27
43-11640	5 | 27
43-11641	5 | 27
43-11642	5 | 27
43-11643	5 | 27
43-11648	5 | 30
43-11649	5 | 30
43-11650	5 | 30
43-11651	5 | 30
43-11652	5 | 31
43-11653	5 | 31

Part-no.	Page
43-11654	5 | 31
43-11655	5 | 31
43-11656	5 | 31
43-11657	5 | 31
43-11658	5 | 31
43-11659	5 | 31
43-11735	6 | 42
43-11736	6 | 42
43-11737	6 | 42
43-11738	6 | 42
43-11739	6 | 42
43-11740	6 | 42
43-11741	6 | 42
43-11742	6 | 42
43-11743	6 | 42
43-11744	6 | 41
43-11745	6 | 41
43-11746	6 | 41
43-11747	6 | 41
43-11748	6 | 41
43-11749	6 | 41
43-11750	6 | 41
43-11751	6 | 41
43-11752	6 | 41
43-11753	6 | 40
43-11754	6 | 40
43-11755	6 | 40
43-11756	6 | 40
43-11757	6 | 40
43-11758	6 | 40
43-11759	6 | 40
43-11760	6 | 40
43-11761	6 | 40
43-11929	6 | 45
43-12100	5 | 32, 34
43-12101	5 | 33, 35
55-00000	10 | 4
55-00001	10 | 4
55-00002	10 | 6
55-00003	10 | 6
55-00004	10 | 5
55-00005	10 | 5
55-00006	10 | 8
55-00007	10 | 8
55-00008	10 | 10
55-00009	10 | 10
55-00010	10 | 12
55-00011	10 | 12
55-00012	10 | 11
55-00013	10 | 11
55-00014	10 | 13
55-00015	10 | 13
55-00016	10 | 14

Part-no.	Page
55-00017	10 | 14
55-00018	10 | 7
55-00019	10 | 7
55-00020	10 | 15
55-00021	10 | 15
55-00022	10 | 9
55-00023	10 | 9
55-00024	10 | 16
55-00025	10 | 16
55-00028	10 | 17
55-00029	10 | 17
55-00039	10 | 5
55-00040	10 | 11
55-00041	10 | 15
55-00042	10 | 17
55-00043	10 | 5
55-00044	10 | 5
55-00045	10 | 4
55-00046	10 | 16
55-00048	10 | 5
55-00064	10 | 4
55-00065	10 | 4
55-00072	10 | 4
55-00073	10 | 13
55-00074	10 | 13
55-00075	10 | 8
55-00079	10 | 4
55-00080	10 | 4
55-00081	10 | 5
55-00082	10 | 5
55-00083	10 | 5
55-00084	10 | 5
55-00085	10 | 4
55-00086	10 | 4
55-00087	10 | 4
55-00088	10 | 4
55-00089	10 | 4
55-00090	10 | 4
55-00091	10 | 4
55-00092	10 | 4
55-00093	10 | 5
55-00094	10 | 5
55-00095	10 | 5
55-00096	10 | 5
55-00097	10 | 5
55-00098	10 | 5
55-00099	10 | 6
55-00100	10 | 6
55-00101	10 | 6
55-00102	10 | 6
55-00103	10 | 6
55-00104	10 | 6
55-00105	10 | 7

Part Numbers

Part-no.	Page
55-00106	10|7
55-00107	10|7
55-00108	10|7
55-00109	10|7
55-00110	10|7
55-00111	10|6
55-00112	10|6
55-00113	10|6
55-00114	10|6
55-00115	10|6
55-00116	10|6
55-00117	10|6
55-00118	10|6
55-00119	10|7
55-00120	10|7
55-00121	10|7
55-00122	10|7
55-00123	10|7
55-00124	10|7
55-00125	10|7
55-00126	10|7
55-00127	10|8
55-00128	10|8
55-00129	10|8
55-00130	10|8
55-00131	10|8
55-00132	10|8
55-00133	10|9
55-00134	10|9
55-00135	10|9
55-00136	10|9
55-00137	10|9
55-00138	10|9
55-00139	10|8
55-00140	10|8
55-00141	10|8
55-00142	10|8
55-00143	10|8
55-00144	10|8
55-00145	10|8
55-00146	10|9
55-00147	10|9
55-00148	10|9
55-00149	10|9
55-00150	10|9
55-00151	10|9
55-00152	10|9
55-00153	10|9
55-00154	10|10
55-00155	10|10
55-00156	10|10
55-00157	10|10
55-00158	10|10

Part-no.	Page
55-00159	10|10
55-00160	10|11
55-00161	10|11
55-00162	10|11
55-00163	10|11
55-00164	10|11
55-00165	10|10
55-00166	10|10
55-00167	10|10
55-00168	10|10
55-00169	10|10
55-00170	10|10
55-00171	10|10
55-00172	10|10
55-00173	10|11
55-00174	10|11
55-00175	10|11
55-00176	10|11
55-00177	10|11
55-00178	10|11
55-00179	10|11
55-00180	10|11
55-00181	10|12
55-00182	10|12
55-00183	10|12
55-00184	10|12
55-00185	10|12
55-00186	10|12
55-00187	10|13
55-00188	10|13
55-00189	10|13
55-00190	10|13
55-00191	10|12
55-00192	10|12
55-00193	10|12
55-00194	10|12
55-00195	10|12
55-00196	10|12
55-00197	10|12
55-00198	10|12
55-00199	10|13
55-00200	10|13
55-00201	10|13
55-00202	10|13
55-00203	10|13
55-00204	10|13
55-00205	10|13
55-00206	10|13
55-00207	10|14
55-00208	10|14
55-00209	10|14
55-00210	10|14
55-00211	10|14

Part-no.	Page
55-00212	10|14
55-00213	10|15
55-00214	10|15
55-00215	10|15
55-00216	10|15
55-00217	10|15
55-00218	10|14
55-00219	10|14
55-00220	10|14
55-00221	10|14
55-00222	10|14
55-00223	10|14
55-00224	10|14
55-00225	10|14
55-00226	10|15
55-00227	10|15
55-00228	10|15
55-00229	10|15
55-00230	10|15
55-00231	10|15
55-00232	10|15
55-00233	10|15
55-00234	10|16
55-00235	10|16
55-00236	10|16
55-00237	10|16
55-00238	10|16
55-00239	10|17
55-00240	10|17
55-00241	10|17
55-00242	10|17
55-00243	10|17
55-00244	10|16
55-00245	10|16
55-00246	10|16
55-00247	10|16
55-00248	10|16
55-00249	10|16
55-00250	10|16
55-00251	10|16
55-00252	10|17
55-00253	10|17
55-00254	10|17
55-00255	10|17
55-00256	10|17
55-00257	10|17
55-00258	10|17
55-00259	10|17

CONEC Product Line

EMI Interface Solutions

Filter D-Subminiature Connectors, Filter Combination Connectors, Filter Water Resistant Connectors, Filter Plates, RJ 45 Magnetic Modular Jack

I/O Connectors

Standard D-Subminiature Connectors, Combination D-Subminiature Connectors, Water Resistant Connector System, D-Subminiature Hoods, D-Subminiature Accessories, SCSI Connectors

PCB Interconnect System

DIN EN 60603-2 Connectors, Combination DIN EN 60603-2 Connectors, DIN 41617 Connectors, Press Fit DIN and D-Subminiature Connectors, DIN 41651 Flat Cable System, Measuring Connector System

PCB Fiber Optic

Fiber Optic Connectors, Fiber Optic Adapters, Fiber Optic Hybrid Adapters, Fiber Optic Outdoor System, Fiber Optic Cable Assembly, Fiber Optic Tools

Coaxial Connectors and Contacts

SMA Coaxial Connectors, SSMA Coaxial Connectors, BNC Coaxial Connectors, D-Sub Coaxial Contacts, DIN Coaxial Contacts, D-Sub High Power and High Voltage Contacts, DIN High Power Contacts

AdvancedTCA / Compact PCI

ATCA Connectors, CPCI Connectors, Tools

Internet
www.conec.com

Use the fastest connection to reach us. Behind this address you'll find a company with an international well-known name.

Our web side will support you to find all information about us and our product range.

Take a look in our catalogs and release your orders and sample bookings – just online.
This saves a lot of time. Catch up our news or engage for our online-help.
Just click-through, that will be the best.

Or contact us in writing:

CONEC Corporation
125 Sun Pac. Blvd.
Brampton Ontario
Canada L6S 5Z6

CONEC®
TECHNOLOGY IN CONNECTORS™

www.conec.com

Germany
Tel. +49 2941 765-0
Fax +49 2941 76565
E-Mail info@conec.de

United Kingdom
Tel. +44 1635 36929
Fax +44 1635 36925
E-Mail info@conec.co.uk

Canada
Tel. +1 905 790 2200
Fax +1 905 790 2201
E-Mail info@conec.com

France
Tel. +33 2 32071058
Fax +33 2 32071063
E-Mail info@conec.fr

USA
Tel. +1 919 460 8800
Fax +1 919 460 0141
E-Mail info@conec.com

Nordic Region
Tel. +45 4593 5533
Fax +45 4593 5523
E-Mail info@conec.dk

Czech Republic
Tel. +420 577 350132
Fax +420 577 350134
E-Mail info@conec.cz

Poland
Tel. +48 713643002
Fax +48 713643010
E-Mail info@conec.pl

China
Tel. +86 21 66300930
Fax +86 21 66300911
E-Mail info@conec.cn

Spain
Tel: +34 935 398 942
Fax. +34 933 969 084
E-Mail info@conec-hispana.com

080820DÖ · Printed in Germany · www.pmr-werbung.de · 08/08/9257