IEC Appliance Inlet C14 or C18 with Filter, ECO design, Front- or Rear Side Mounting

Snap-in mounting
from front side

Front side mounting with plastic flange

Snap-in 2 - 3 mm
with wires (stranded)

C14 C18

70° C

70° C

See below:
Approvals and Compliances

Description

- Panel mount :
  Screw-on version from front or rear side, snap-in version from front side, PCB Version from rear side
- 2 Functions :
  Appliance Inlet protection class I or II , Line filter in standard and medical version
- Solder/quick connect/wire (stranded)
- PCB
- Earth Terminal

Unique Selling Proposition

- V-Lock cord retaining
- Metal flange for optimal shielding
- Compact design
- Variants for protection class I and II

Characteristics

- Compact high performance filter
  Optimal shielding due to completely closed filter case, unpotted
- Suitable for assembly in metal plated plastic housings
- Suitable for use in medical equipment according to IEC/UL 60601-1 (1 MOOP, 1 MOPP)
  For applications according IEC/UL 62368-1 we recommend variants with bleed resistor

Other versions on request

- Snap-in for panel thickness >2mm to 3mm
- flexible wire with various lenghts
- Class X1- and Y1-capacitors for enhanced withstand voltage
- Medical Version (M80)

References

Alternative: version without line filter 6100-3; 6100-4; 6102-3; 6102-5

Weblinks

pdf data sheet, html datasheet, General Product Information, Approvals, Distributor-Stock-Check, Accessories, Detailed request for product

Technical Data

Ratings IEC	1 - 10 A @ Ta 40 °C / 250 VAC; 50 Hz
Ratings UL/CSA	1 - 15 A @ Ta 40 °C / 250 VAC; 60 Hz
Leakage Current	standard < 0.5 mA (250 V / 60 Hz) medical < 5 µA (250 V / 60 Hz)
Dielectric Strength	> 1.7 kVDC between L-N > 2.7 kVDC between L/N-PE Test voltage (2 sec)
Allowable Operation Temperature	-25 °C to 85 °C
Climatic Category	25/085/21 acc. to IEC 60068-1
IP-Protection	front side IP40 acc. to IEC 60529
Protection Class	Suitable for appliances with protection class I or II acc. to IEC 61140
Terminal	Quick connect terminals 6.3 x 0.8 mm Solder terminals Flexible wire AWG18 (15A AWG16), 150 mm
Panel Thickness S	Screw with plastic flange: max 8 mm Mounting screw torque max 0.5 Nm Snap-in: 0.8 mm to 2 mm (all steps with one variant)
Material	Themoplast / steel tin-plated, black / metallic, UL 94V-0

Appliance inlet/-outlet	C14 / C18 acc. to IEC 60320-1, UL 498, CSA C22.2 no. 42 (for cold conditions) pin-temperature 70 °C, 10 A, Protection Class I or II
Line Filter	Standard and Medical Version, IEC 60939, UL 1283, CSA C22.2 no. 8 Technical Details
MTBF	> 3'000'000 h acc. to MIL-HB-217 F

Approvals and Compliances

Detailed information on product approvals, code requirements, usage instructions and detailed test conditions can be looked up in Details about Approvals

SCHURTER products are designed for use in industrial environments. They have approvals from independent testing bodies according to national and international standards. Products with specific characteristics and requirements such as required in the automotive sector according to IATF 16949, medical technology according to ISO 13485 or in the aerospace industry can be offered exclusively with customer-specific, individual agreements by SCHURTER.

Approvals

The approval mark is used by the testing authorities to certify compliance with the safety requirements placed on electronic products.

Approval Reference Type: 5120

Approval Logo	Certificates	Certification Body	Description
10	VDE Approvals	VDE	Certificate Number: 40016382
c US	UL Approvals	UL	UR File Number: E72928
CQC	CQC Approvals	CQC	CQC Certificate Number: 19001218810, 22001364058

Product standards

Product standards that are referenced

Organization	Design	Standard	Description
IEC	Designed according to	IEC 60320-1	Appliance couplers for household and similar general purposes
IEC	Designed according to	IEC 60939	Passive filters for suppressing electromagnetic interference
UL	Designed according to	UL 498	Standard for Attachment Plugs and Receptacles
UL	Designed according to	UL 1283	Electromagnetic interference filters
CSA Group	Designed according to	CSA C22.2 no. 42	General Use Receptacles, Attachment Plugs, and Similar Wiring Devices
CSA Group	Designed according to	CSA C22.2 no. 8	Electromagnetic interference (EMI) filters

Application standards

Application standards where the product can be used

Organization	Design	Standard	Description
IEC	Suitable for applications acc.	IEC/UL 62368-1	Audio/video, information and communication technology equipment - Part 1: Safety requirements
IEC	Suitable for applications acc.	IEC 60601-1	Medical electrical equipment - Part 1: General requirements for basic safety and essential performance

Compliances

The product complies with following Guide Lines

Identification	Details	Initiator	Description
CE	CE declaration of conformity	SCHURTER AG	The CE marking declares that the product complies with the applicable requirements laid down in the harmonisation of Community legislation on its affixing in accordance with EU Regulation 765/2008.
UKCA	UKCA declaration of conformity	SCHURTER AG	The UKCA marking declares that the product complies with the applicable requirements laid down in the British Amendment of Regulation (EC) 765/2008.
RoHS COMPLIANT	RoHS	SCHURTER AG	Directive RoHS 2011/65/EU, Amendment (EU) 2015/863
e	China RoHS	SCHURTER AG	The law SJ / T 11363-2006 (China RoHS) has been in force since 1 March 2007. It is similar to the EU directive RoHS.
REACH	REACH	SCHURTER AG	On 1 June 2007, Regulation (EC) No 1907/2006 on the Registration, Evaluation, Authorization and Restriction of Chemicals 1 (abbreviated as "REACH") entered into force.
V-Lock		SCHURTER AG	V-Lock system are based on a matching plug-dose combination. The connector is equipped with a notch intended for use with the latching cordset. The cord latching system prevents against accidental removal of the cordset.
	Medical Equipment	SCHURTER AG	Suitable for use in medical equipment according to IEC/UL 60601-1 (1 MOOP, 1 MOPP)

Dimensions [mm]

Front or rear side mounting for screws with nuts or blind rivets (panel cutout for frontside mounting)

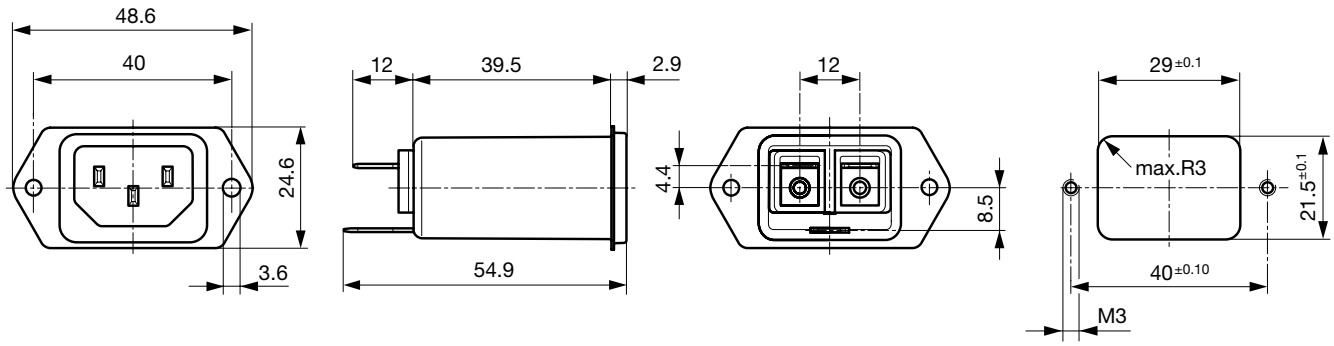

Front side mounting with plastic flange

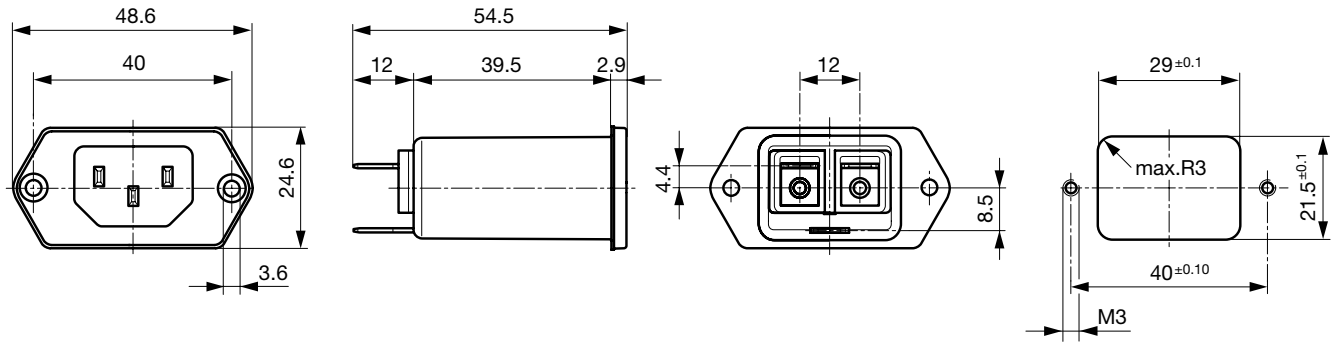

Rear side mounting with pre-formed, threaded holes for M3 screws (panel cutout for rear side mounting)

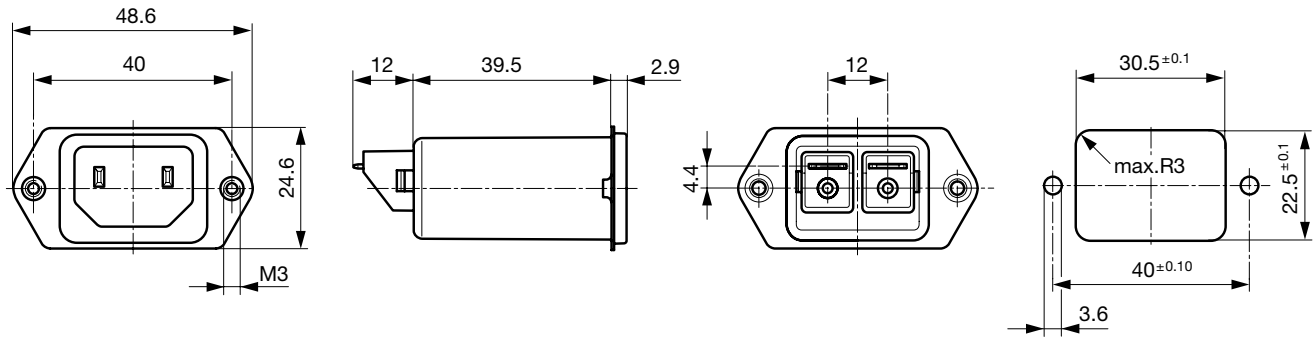

Dimensions for class II version also apply to class I

Snap-in mounting from front side

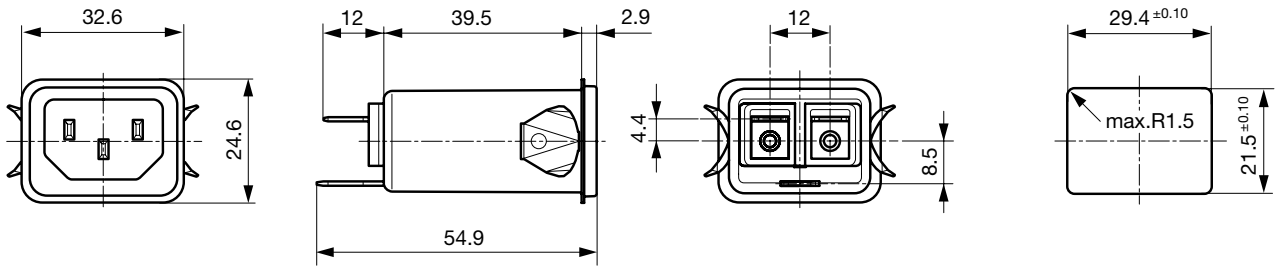

Dimensions for class I version also apply class II

PCB snap-in rear side mounting, protection class II

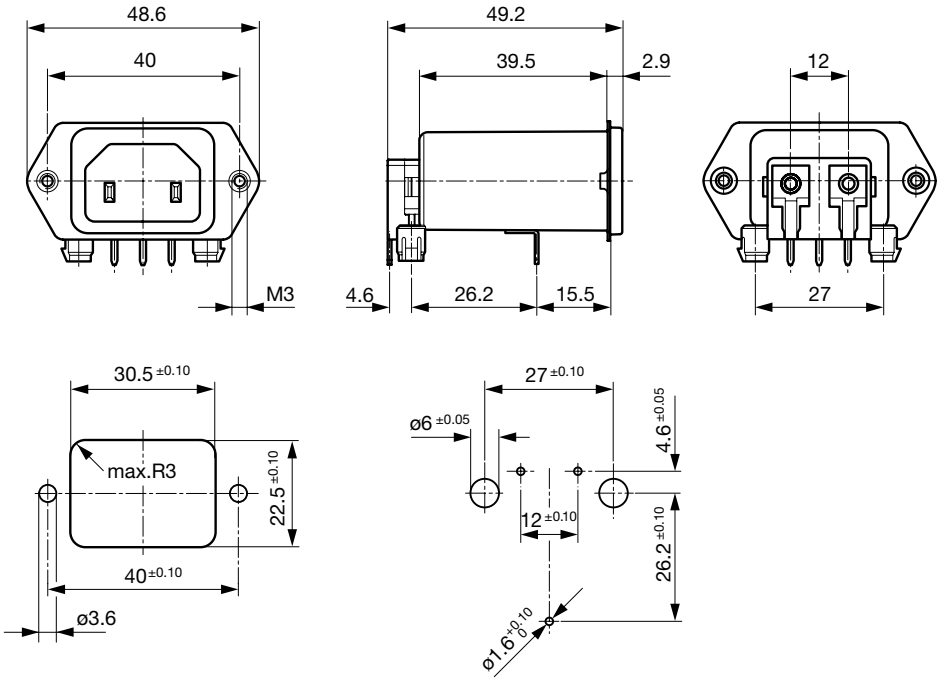

PCB rear side mounting, protection class II

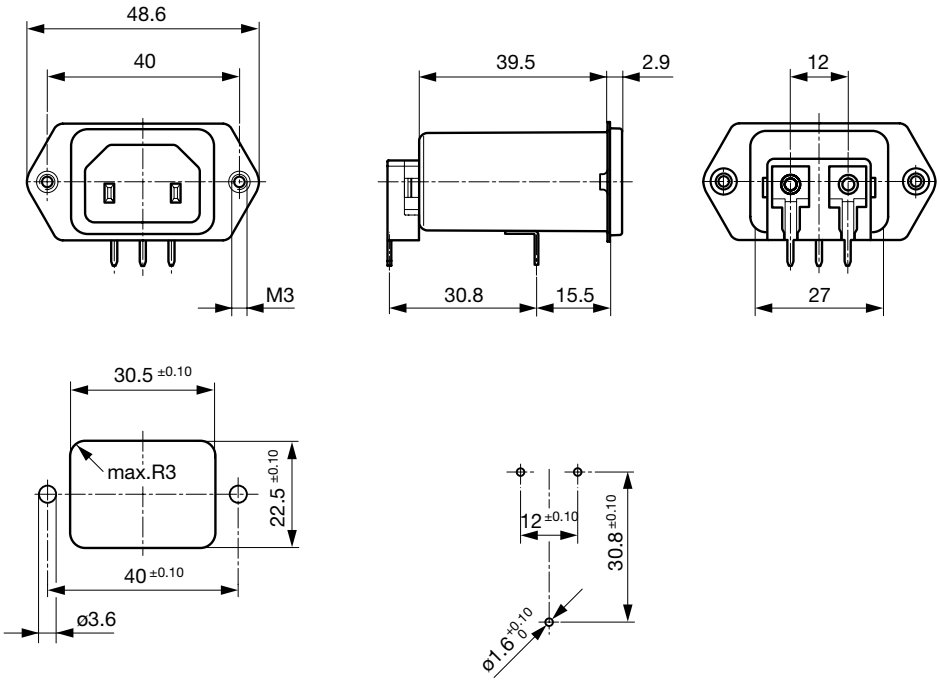

Screw and snap-in mounting with flexible wire

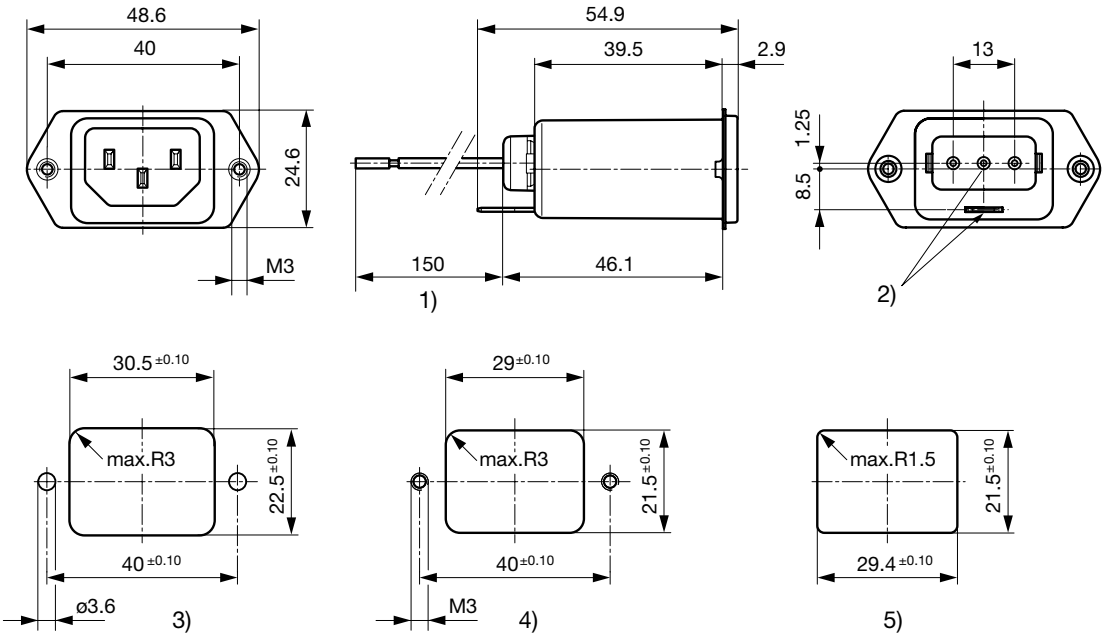

1) Flexible wire, standard length 150 mm or special length on request
2) Nonexistent for protection class II
3) Panel cut-out screw-on version, back-side mounting
4) Panel cut-out screw-on version, front- or back-side mounting
5) Panel cut-out snap-in version, front-side mounting

Technical Data of Filter-Components

Rated Current [A]	Filter-Type	Inductances L [mH]	Capacitance CX [nF]	Capacitance CY [nF]	R [MΩ]
1	Standard version	2 x 12	100	2.2	-
2	Standard version	2 x 5.2	100	2.2	-
4	Standard version	2 x 2	100	2.2	-
6	Standard version	2 x 0.8	100	2.2	-
10	Standard version	2 x 0.4	100	2.2	-
15	Standard version	2 x 0.1	100	2.2	-
1	Medical Version (M5)	2 x 12	100	-	1
2	Medical Version (M5)	2 x 5.2	100	-	1
4	Medical Version (M5)	2 x 2	100	-	1
6	Medical Version (M5)	2 x 0.8	100	-	1
10	Medical Version (M5)	2 x 0.4	100	-	1
15	Medical Version (M5)	2 x 0.1	100	-	1
1	Bleed Resistor Version	2 x 12	100	2.2	1
2	Bleed Resistor Version	2 x 5.2	100	2.2	1
4	Bleed Resistor Version	2 x 2	100	2.2	1
6	Bleed Resistor Version	2 x 0.8	100	2.2	1
10	Bleed Resistor Version	2 x 0.4	100	2.2	1
15	Bleed Resistor Version	2 x 0.1	100	2.2	1

Diagrams

Standard version

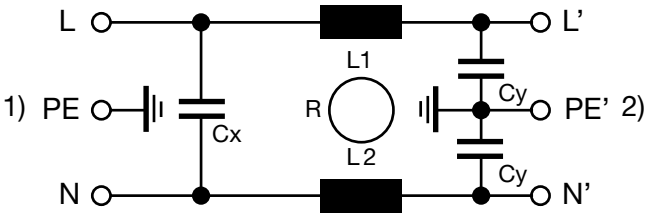

1) Line
2) Load

Standard version / Medical version M80

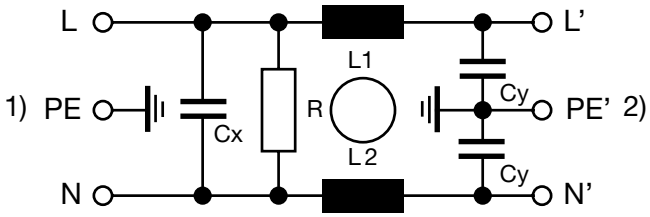

1) Line
2) Load

Medical Version (M5)

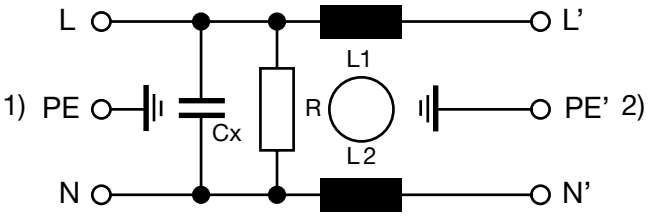

1) Line
2) Load

Medicalversion (M5), Protection Class II

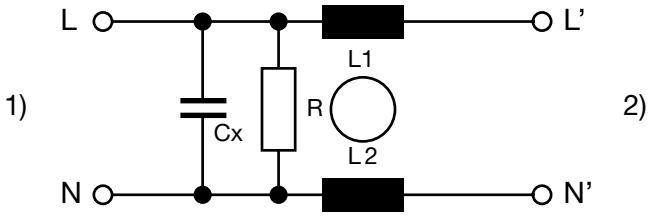

1) Line
2) Load

Attenuation Loss

- - - - 50Ω differential mode _____ 50Ω common mode

Standard version

1 A

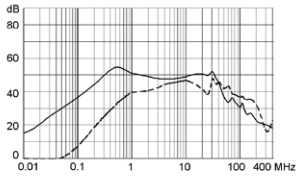

2 A

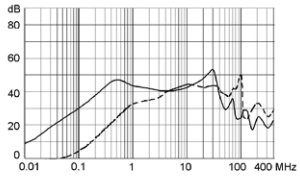

4 A

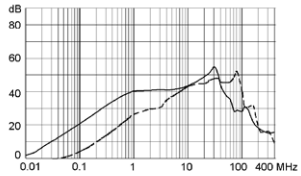

6 A

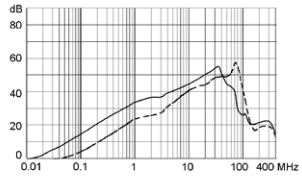

10 A

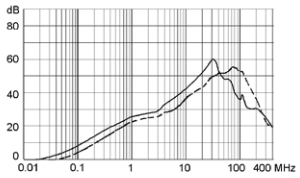

15 A

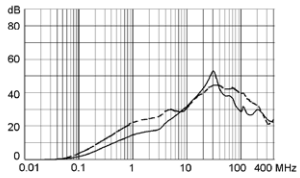

Medical version (M5)

1 A

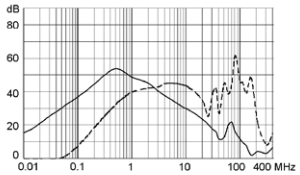

2 A

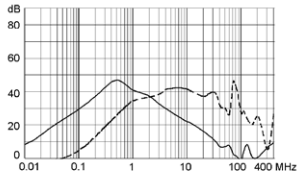

4 A

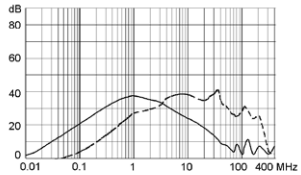

6 A

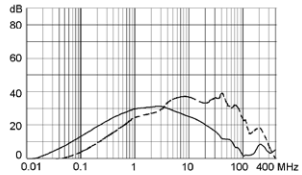

10 A

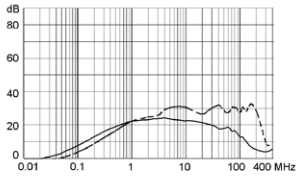

15 A

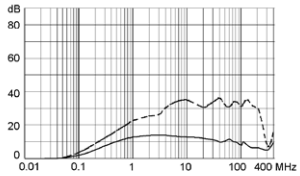

All Variants

Rated Current [A]	Filter-Type	Mounting	Mounting side	Terminal	Protection Class	V-Lock	Order Number
6	Standard version	Snap-in 2 - 3 mm	Front Side	Flexible wire AWG18	I	●	5120.3034.0
1	Standard version	Snap-in	Front Side	Quick connect terminals 6.3 x 0.8 mm	I	●	5120.2000.0
2	Standard version	Snap-in	Front Side	Quick connect terminals 6.3 x 0.8 mm	I	●	5120.2001.0
4	Standard version	Snap-in	Front Side	Quick connect terminals 6.3 x 0.8 mm	I	●	5120.2003.0
6	Standard version	Snap-in	Front Side	Quick connect terminals 6.3 x 0.8 mm	I	●	5120.2004.0
10	Standard version	Snap-in	Front Side	Quick connect terminals 6.3 x 0.8 mm	I	●	5120.2006.0
10	Standard version	Snap-in	Front Side	Flexible wire and Earth pin 6.3 x 0.8	I	●	5120.2046.0
15	Standard version	Snap-in	Front Side	Quick connect terminals 6.3 x 0.8 mm	I	●	5120.2007.0

Rated Current [A]	Filter-Type	Mounting	Mounting side	Terminal	Protection Class	V-Lock	Order Number
1	Standard version	Screw/Soldering on PCB	Rear Side	PCB pin and earth pin 6.3 x 0.8	I	●	5120.4070.0
2	Standard version	Screw/Soldering on PCB	Rear Side	PCB pin and earth pin 6.3 x 0.8	I	●	5120.4071.0
4	Standard version	Screw/Soldering on PCB	Rear Side	PCB pin and earth pin 6.3 x 0.8	I	●	5120.4073.0
6	Standard version	Screw/Soldering on PCB	Rear Side	PCB pin and earth pin 6.3 x 0.8	I	●	5120.4074.0
10	Standard version	Screw/Soldering on PCB	Rear Side	PCB pin and earth pin 6.3 x 0.8	I	●	5120.4076.0
15	Standard version	Screw/Soldering on PCB	Rear Side	PCB pin and earth pin 6.3 x 0.8	I	●	5120.4077.0
1	Standard version	Screw/Soldering and Snap-in on PCB	Rear Side	PCB pin and earth pin 6.3 x 0.8	I	●	5120.5070.0
2	Standard version	Screw/Soldering and Snap-in on PCB	Rear Side	PCB pin and earth pin 6.3 x 0.8	I	●	5120.5071.0
4	Standard version	Screw/Soldering and Snap-in on PCB	Rear Side	PCB pin and earth pin 6.3 x 0.8	I	●	5120.5073.0
6	Standard version	Screw/Soldering and Snap-in on PCB	Rear Side	PCB pin and earth pin 6.3 x 0.8	I	●	5120.5074.0
10	Standard version	Screw/Soldering and Snap-in on PCB	Rear Side	PCB pin and earth pin 6.3 x 0.8	I	●	5120.5076.0
15	Standard version	Screw/Soldering and Snap-in on PCB	Rear Side	PCB pin and earth pin 6.3 x 0.8	I	●	5120.5077.0
1	Standard version	Screw-on/Rivet	Front-/Rear-Side	Quick connect terminals 6.3 x 0.8 mm	I	●	5120.0000.0
1	Standard version	Screw-on/Rivet	Front-/Rear-Side	Solder terminals	I	●	5120.0010.0
2	Standard version	Screw-on/Rivet	Front-/Rear-Side	Quick connect terminals 6.3 x 0.8 mm	I	●	5120.0001.0
4	Standard version	Screw-on/Rivet	Front-/Rear-Side	Quick connect terminals 6.3 x 0.8 mm	I	●	5120.0003.0
6	Standard version	Screw-on/Rivet	Front-/Rear-Side	Quick connect terminals 6.3 x 0.8 mm	I	●	5120.0004.0
10	Standard version	Screw-on/Rivet	Front-/Rear-Side	Quick connect terminals 6.3 x 0.8 mm	I	●	5120.0006.0
15	Standard version	Screw-on/Rivet	Front-/Rear-Side	Quick connect terminals 6.3 x 0.8 mm	I	●	5120.0007.0
15	Standard version	Screw-on/Rivet	Front-/Rear-Side	Flexible wire AWG16	I	●	5120.0057.0
1	Standard version	Screw with plastic flange	Front Side	Quick connect terminals 6.3 x 0.8 mm	I	●	3-101-140
2	Standard version	Screw with plastic flange	Front Side	Quick connect terminals 6.3 x 0.8 mm	I	●	3-101-141
4	Standard version	Screw with plastic flange	Front Side	Quick connect terminals 6.3 x 0.8 mm	I	●	3-101-142
6	Standard version	Screw with plastic flange	Front Side	Quick connect terminals 6.3 x 0.8 mm	I	●	3-101-143
10	Standard version	Screw with plastic flange	Front Side	Quick connect terminals 6.3 x 0.8 mm	I	●	3-100-776
15	Standard version	Screw with plastic flange	Front Side	Quick connect terminals 6.3 x 0.8 mm	I	●	3-101-144
1	Standard version	Screw	Rear Side	Quick connect terminals 6.3 x 0.8 mm	I	●	5120.1000.0
2	Standard version	Screw	Rear Side	Quick connect terminals 6.3 x 0.8 mm	I	●	5120.1001.0
4	Standard version	Screw	Rear Side	Quick connect terminals 6.3 x 0.8 mm	I	●	5120.1003.0
6	Standard version	Screw	Rear Side	Quick connect terminals 6.3 x 0.8 mm	I	●	5120.1004.0

Rated Current [A]	Filter-Type	Mounting	Mounting side	Terminal	Protection Class	V-Lock	Order Number
10	Standard version	Screw	Rear Side	Quick connect terminals 6.3 x 0.8 mm	I	●	5120.1006.0
10	Standard version	Screw	Rear Side	Flexible wire and Earth pin 6.3 x 0.8	I	●	5120.1046.0
15	Standard version	Screw	Rear Side	Quick connect terminals 6.3 x 0.8 mm	I	●	5120.1007.0
1	Medical Version (M5)	Snap-in	Front Side	Quick connect terminals 6.3 x 0.8 mm	I	●	5120.2300.0
2	Medical Version (M5)	Snap-in	Front Side	Quick connect terminals 6.3 x 0.8 mm	I	●	5120.2301.0
4	Medical Version (M5)	Snap-in	Front Side	Quick connect terminals 6.3 x 0.8 mm	I	●	5120.2303.0
6	Medical Version (M5)	Snap-in	Front Side	Quick connect terminals 6.3 x 0.8 mm	I	●	5120.2304.0
10	Medical Version (M5)	Snap-in	Front Side	Quick connect terminals 6.3 x 0.8 mm	I	●	5120.2306.0
15	Medical Version (M5)	Snap-in	Front Side	Quick connect terminals 6.3 x 0.8 mm	I	●	5120.2307.0
4	Medical Version (M5)	Screw/Soldering on PCB	Rear Side	PCB pin and earth pin 6.3 x 0.8	I	●	5120.4373.0
6	Medical Version (M5)	Screw/Soldering on PCB	Rear Side	PCB pin and earth pin 6.3 x 0.8	I	●	5120.4374.0
4	Medical Version (M5)	Screw/Soldering and Snap-in on PCB	Rear Side	PCB pin and earth pin 6.3 x 0.8	I	●	5120.5373.0
6	Medical Version (M5)	Screw/Soldering and Snap-in on PCB	Rear Side	PCB pin and earth pin 6.3 x 0.8	I	●	5120.5374.0
1	Medical Version (M5)	Screw-on/Rivet	Front-/Rear-Side	Quick connect terminals 6.3 x 0.8 mm	I	●	5120.0300.0
2	Medical Version (M5)	Screw-on/Rivet	Front-/Rear-Side	Quick connect terminals 6.3 x 0.8 mm	I	●	5120.0301.0
4	Medical Version (M5)	Screw-on/Rivet	Front-/Rear-Side	Quick connect terminals 6.3 x 0.8 mm	I	●	5120.0303.0
4	Medical Version (M5)	Screw-on/Rivet	Front-/Rear-Side	Flexible wire and Earth pin 6.3 x 0.8	I	●	5120.0343.0
6	Medical Version (M5)	Screw-on/Rivet	Front-/Rear-Side	Quick connect terminals 6.3 x 0.8 mm	I	●	5120.0304.0
10	Medical Version (M5)	Screw-on/Rivet	Front-/Rear-Side	Quick connect terminals 6.3 x 0.8 mm	I	●	5120.0306.0
15	Medical Version (M5)	Screw-on/Rivet	Front-/Rear-Side	Quick connect terminals 6.3 x 0.8 mm	I	●	5120.0307.0
1	Medical Version (M5)	Screw with plastic flange	Front Side	Quick connect terminals 6.3 x 0.8 mm	I	●	3-101-145
2	Medical Version (M5)	Screw with plastic flange	Front Side	Quick connect terminals 6.3 x 0.8 mm	I	●	3-101-146
4	Medical Version (M5)	Screw with plastic flange	Front Side	Quick connect terminals 6.3 x 0.8 mm	I	●	3-100-794
6	Medical Version (M5)	Screw with plastic flange	Front Side	Quick connect terminals 6.3 x 0.8 mm	I	●	3-101-147
10	Medical Version (M5)	Screw with plastic flange	Front Side	Quick connect terminals 6.3 x 0.8 mm	I	●	3-101-148
15	Medical Version (M5)	Screw with plastic flange	Front Side	Quick connect terminals 6.3 x 0.8 mm	I	●	3-101-149
1	Medical Version (M5)	Screw	Rear Side	Quick connect terminals 6.3 x 0.8 mm	I	●	5120.1300.0
2	Medical Version (M5)	Screw	Rear Side	Quick connect terminals 6.3 x 0.8 mm	I	●	5120.1301.0

Rated Current [A]	Filter-Type	Mounting	Mounting side	Terminal	Protection Class	V-Lock	Order Number
4	Medical Version (M5)	Screw	Rear Side	Quick connect terminals 6.3 x 0.8 mm	I	●	5120.1303.0
6	Medical Version (M5)	Screw	Rear Side	Quick connect terminals 6.3 x 0.8 mm	I	●	5120.1304.0
10	Medical Version (M5)	Screw	Rear Side	Quick connect terminals 6.3 x 0.8 mm	I	●	5120.1306.0
10	Medical Version (M5)	Screw	Rear Side	Flexible wire and Earth pin 6.3 x 0.8	I	●	5120.1346.0
15	Medical Version (M5)	Screw	Rear Side	Quick connect terminals 6.3 x 0.8 mm	I	●	5120.1307.0
1	Medical Version (M5)	Snap-in	Front Side	Quick connect terminals 6.3 x 0.8 mm	II	●	5120.2300.1
2	Medical Version (M5)	Snap-in	Front Side	Quick connect terminals 6.3 x 0.8 mm	II	●	5120.2301.1
4	Medical Version (M5)	Snap-in	Front Side	Quick connect terminals 6.3 x 0.8 mm	II	●	5120.2303.1
6	Medical Version (M5)	Snap-in	Front Side	Quick connect terminals 6.3 x 0.8 mm	II	●	5120.2304.1
10	Medical Version (M5)	Snap-in	Front Side	Quick connect terminals 6.3 x 0.8 mm	II	●	5120.2306.1
15	Medical Version (M5)	Snap-in	Front Side	Quick connect terminals 6.3 x 0.8 mm	II	●	5120.2307.1
4	Medical Version (M5)	Screw/Soldering on PCB	Rear Side	PCB pin and earth pin 6.3 x 0.8	II	●	5120.4373.1
6	Medical Version (M5)	Screw/Soldering on PCB	Rear Side	PCB pin and earth pin 6.3 x 0.8	II	●	5120.4374.1
4	Medical Version (M5)	Screw/Soldering and Snap-in on PCB	Rear Side	PCB pin and earth pin 6.3 x 0.8	II	●	5120.5373.1
6	Medical Version (M5)	Screw/Soldering and Snap-in on PCB	Rear Side	PCB pin and earth pin 6.3 x 0.8	II	●	5120.5374.1
10	Medical Version (M5)	Screw/Soldering and Snap-in on PCB	Rear Side	PCB pin and earth pin 6.3 x 0.8	II	●	5120.5376.1
2	Medical Version (M5)	Screw-on/Rivet	Front-/Rear-Side	Quick connect terminals 6.3 x 0.8 mm	II	●	5120.0301.1
4	Medical Version (M5)	Screw-on/Rivet	Front-/Rear-Side	Quick connect terminals 6.3 x 0.8 mm	II	●	5120.0303.1
6	Medical Version (M5)	Screw-on/Rivet	Front-/Rear-Side	Quick connect terminals 6.3 x 0.8 mm	II	●	5120.0304.1
10	Medical Version (M5)	Screw-on/Rivet	Front-/Rear-Side	Solder terminals	II	●	5120.0316.1
1	Medical Version (M5)	Screw	Rear Side	Quick connect terminals 6.3 x 0.8 mm	II	●	5120.1300.1
2	Medical Version (M5)	Screw	Rear Side	Quick connect terminals 6.3 x 0.8 mm	II	●	5120.1301.1
2	Medical Version (M5)	Screw	Rear Side	Solder terminals	II	●	5120.1311.1
4	Medical Version (M5)	Screw	Rear Side	Quick connect terminals 6.3 x 0.8 mm	II	●	5120.1303.1
6	Medical Version (M5)	Screw	Rear Side	Quick connect terminals 6.3 x 0.8 mm	II	●	5120.1304.1
10	Medical Version (M5)	Screw	Rear Side	Quick connect terminals 6.3 x 0.8 mm	II	●	5120.1306.1
2	Bleed Resistor Version	Snap-in	Front Side	Quick connect terminals 6.3 x 0.8 mm	I	●	5120.2201.0
4	Bleed Resistor Version	Snap-in	Front Side	Quick connect terminals 6.3 x 0.8 mm	I	●	5120.2203.0
6	Bleed Resistor Version	Snap-in	Front Side	Quick connect terminals 6.3 x 0.8 mm	I	●	5120.2204.0

Rated Current [A]	Filter-Type	Mounting	Mounting side	Terminal	Protection Class	V-Lock	Order Number
10	Bleed Resistor Version	Snap-in	Front Side	Quick connect terminals 6.3 x 0.8 mm	I	●	5120.2206.0
15	Bleed Resistor Version	Snap-in	Front Side	Quick connect terminals 6.3 x 0.8 mm	I	●	5120.2207.0
10	Bleed Resistor Version	Screw-on/Rivet	Front-/Rear-Side	Solder terminals	I	●	5120.0216.0

Most Popular.

Availability for all products can be searched real-time:https://www.schurter.com/en/Stock-Check/Stock-Check-SCHURTER

- 15 A version only according UL/CSA

- Type for screw-on mounting from rear side has pre-threaded holes for M3 screws

Packaging unit 10 Pcs

Accessories

Description

Wire_Harness
Wire harness for SCHURTER products

Assorted_Covers
Rear Cover

	0859.0048

RC320
Rear Cover for Power Entry Module

Cord_retaining_kits
Cord retaining strain relief

Flat head, E	4700.0005
Flat head, G	4700.0007

Mating Outlets/Connectors

Category / Description

Appliance Outlet Overview complete

4787, Mounting: Screw-on mounting, Appliance Outlet: IEC Solder terminals, 10 A, Suitable for appliances with protection class I	4787
4788, Mounting: Snap-in version, Appliance Outlet: IEC Solder / Quick Connect, 10 A, Suitable for appliances with protection class I	4788
IEC Appliance Outlet F or H, Screw-on Mounting, Front Side, Solder, PCB or Quick-connect Terminal	5091

Connector Overview complete

4782 Mounting: Power Cord, 3 x 1 mm² / 3 x 18 AWG, Cable, Connector: IEC C13	4782
4785 Mounting: Power Cord, 3 x 1 mm² / 3 x 18 AWG, Cable, Connector: IEC C13	4785
4300-06 Mounting: Power Cord, 3 x 1 mm² / 3 x 18 AWG, Cable, Connector: IEC C13	4300-06
4781 Mounting: Power Cord, Cable, Connector: IEC C15	4781
4784 Mounting: Power Cord, 3 x 1 mm² / 3 x 18 AWG, Cable, Connector: IEC C15	4784
	...

Mating Outlets/Connectors shuttered

Connector Overview complete

4783 Mounting: Power Cord, 3 x 1 mm² / 3 x 18 AWG, Cable, Connector: IEC C13	4783

Power Cord Overview complete

VAC13KS, Overview, V-Lock cord retaining, diverse Connector IEC C13, diverse, black	VAC13KS
VAC17KS, V-Lock cord retaining, diverse m, Connector IEC C17, diverse, black / grey / white	VAC17KS

06.02.2023

The specifications, descriptions and illustrations indicated in this document are based on current information. All content is subject to modifications and amendments. Information furnished is believed to be accurate and reliable. However, users should independently evaluate the suitability and test each product selected for their own applications.