IEC Appliance Inlet C14 or C18 with Filter, ECO design, Front- or Rear Side Mounting

Standard- or Medical-Filter

V-Lock

new

Screw-on mounting
PCB snap-in version

Snap-in mounting
Quick connect terminals 6.3 x 0.8 mm
Protection class II

Screw-on mounting
with wires (stranded)

C14 70° C

C18 70° C

RoHS COMPLIANT 2002/95/EC

c UL us

EN 10

Description

- Panel Mount:
  Screw-on version from front or rear side, snap-in version from front side, PCB Version from rear side
- 2 Functions:
  Appliance Inlet protection class I or II, Line filter in standard and medical version
- Solder, quick connect or wire (stranded)
- PCB Mounting
- Earth Terminal

Approvals

- VDE Certificate Number: 40016382
- UL File Number: E72928

Characteristics

- Compact high performance filter
  Optimal shielding due to completely closed filter case, unpotted
- Designed for standard and medical applications
  Suitable for assembly in metal plated plastic housings
- Qualified for use in equipment according IEC/EN 60950

Other versions on request

- Snap-in for panel thickness >2mm to 3mm
- flexible wire with various lenghts
- Class X1- and Y1-capacitors for enhanced withstand voltage
- Medical version M80
- Variant with notch for V-Lock mating Cordsets

References

Weblinks

pdf, html, General Product Information, Approvals, RoHS, CHINA-RoHS, Mating Connectors, e-Store, SCHURTER-Stock-Check, Distributor-Stock-Check, Accessories

Newly available variants corresponding to V-Lock mating cordset. The connector is equipped with a notch intended for use with the latching cordset. The cord latching system prevents against accidental removal of the cordset.

Technical Data

Ratings IEC	1 - 10 A @ Ta 40 °C / 250 VAC; 50 Hz
Ratings UL/CSA	1 - 15 A @ Ta 40 °C / 250 VAC; 60 Hz
Leakage Current	standard < 0.5 mA (250 V / 60 Hz) medical < 5 µA (250 V / 60 Hz)
Dielectric Strength	> 1.7 kVDC between L-N > 2.7 kVDC between L/N-PE Test voltage (2 sec)
Allowable Operation Temp.	-25 °C to 85 °C
Climatic Category	25/085/21 acc. to IEC 60068-1
Degree of Protection	from front side IP 40 acc. to IEC 60529
Protection Class	Suitable for appliances with protection class 1 or 2 acc. to IEC 61140
Terminal	Quick connect terminals 6.3 x 0.8 mm Solder terminals Flexible wire AWG18 (15A AWG16), 150 mm
Panel Thickness s	Screw: max 8 mm Mounting screw torque max 0.5 Nm Snap-in: 0.8 mm to 2 mm (all steps with one variant)
Material: Housing	Themoplast / steel tin-plated, black / metallic, UL 94V-0

Appliance-Inlet/-Outlet	C14 acc. to IEC/EN 60320-1, UL 498, CSA C22.2 no. 42 (for cold conditions) pin-temperature 70 °C, 10 A, Protection Class 1 or 2
Line Filter	Standard and Medical Version, IEC 60939, IEC 60601-1, UL 1283, UL 544, CSA C22.2 no. 8 Technical details
MTBF	> 3'000'000 h acc. to MIL-HB-217 F

Dimensions

54.5 mm

Front or rear side mounting for screws with nuts or blind rivets (panel cutout for frontside mounting)

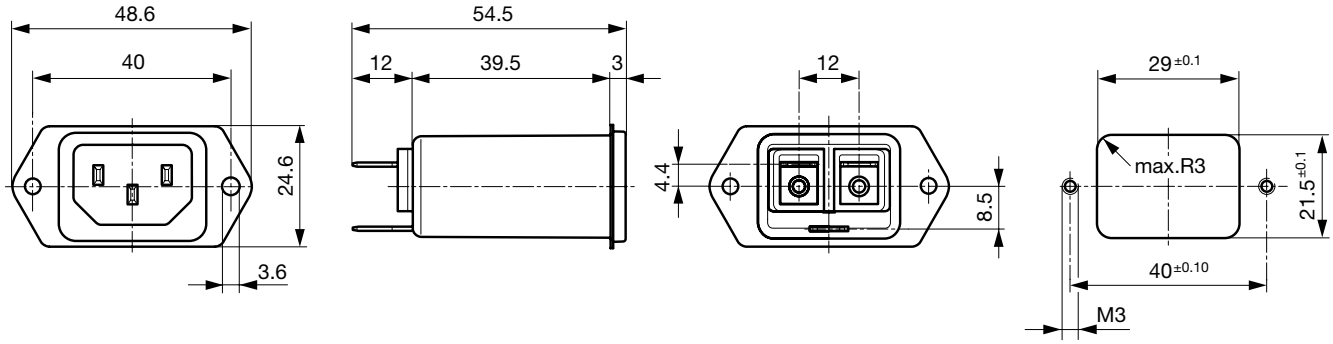

Rear side mounting with pre-formed, threaded holes for M3 screws (panel cutout for rear side mounting)

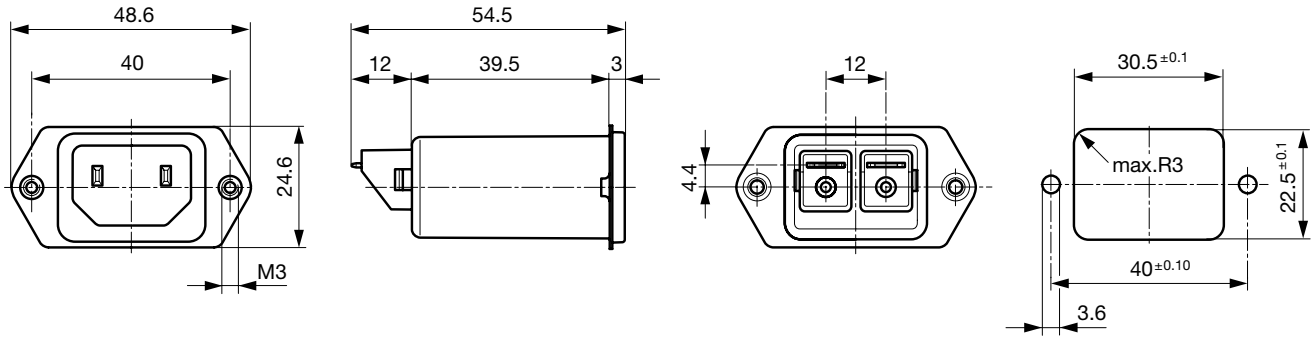

Dimensions for class II version also apply to class I

Snap-in mounting from front side

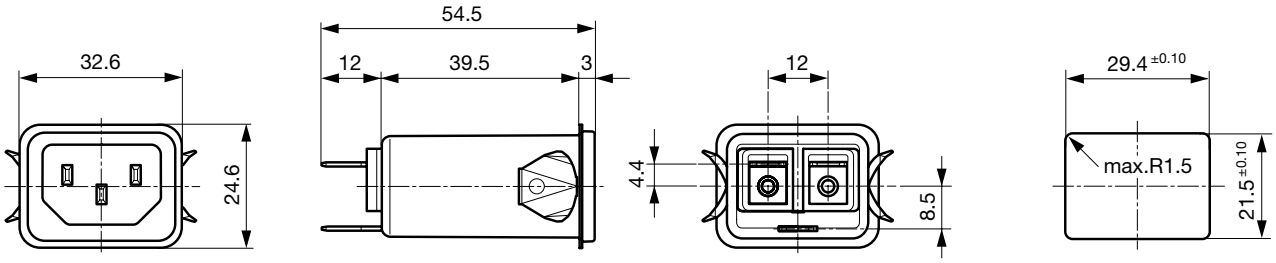

Dimensions for class I version also apply class II

PCB snap-in rear side mounting, protection class I

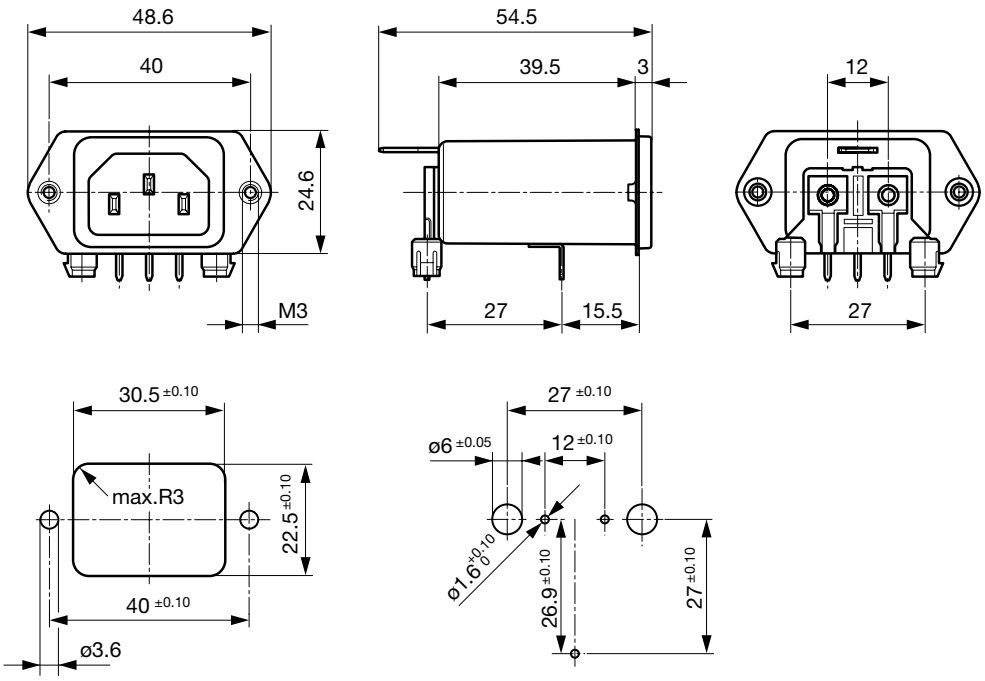

PCB rear side mounting, protection class I

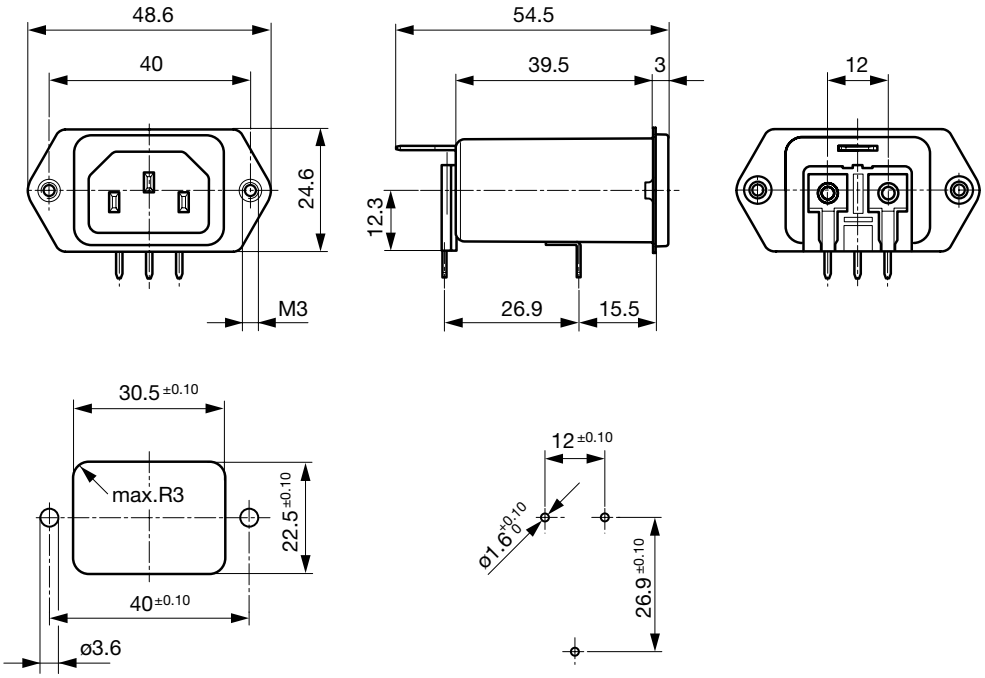

PCB snap-in rear side mounting, protection class II

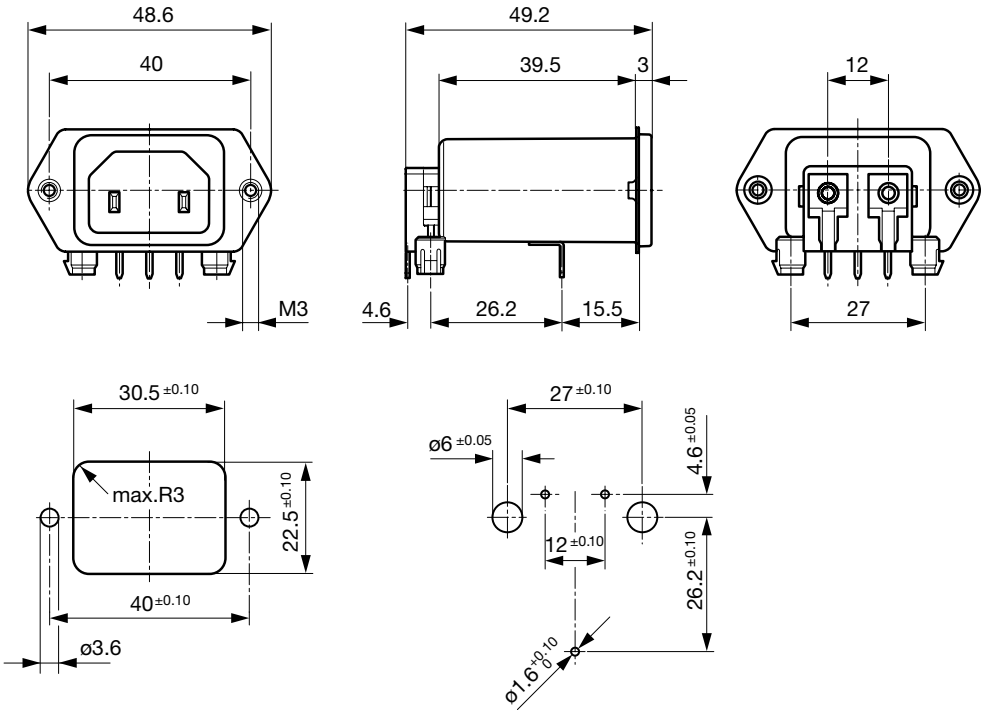

PCB rear side mounting, protection class II

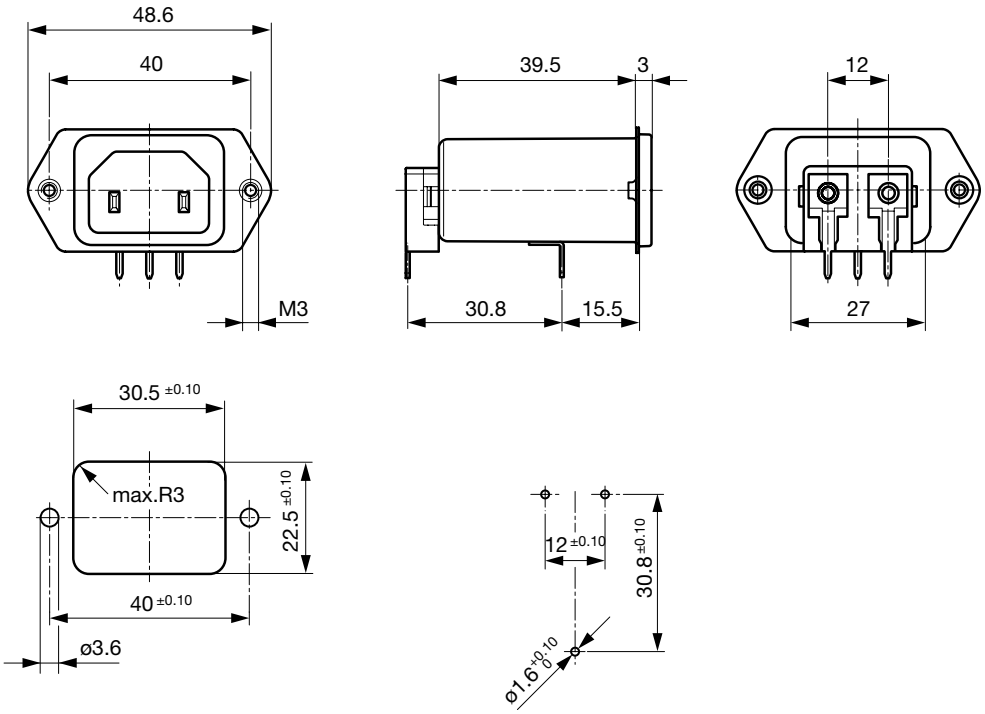

Screw and snap-in mounting with flexible wire

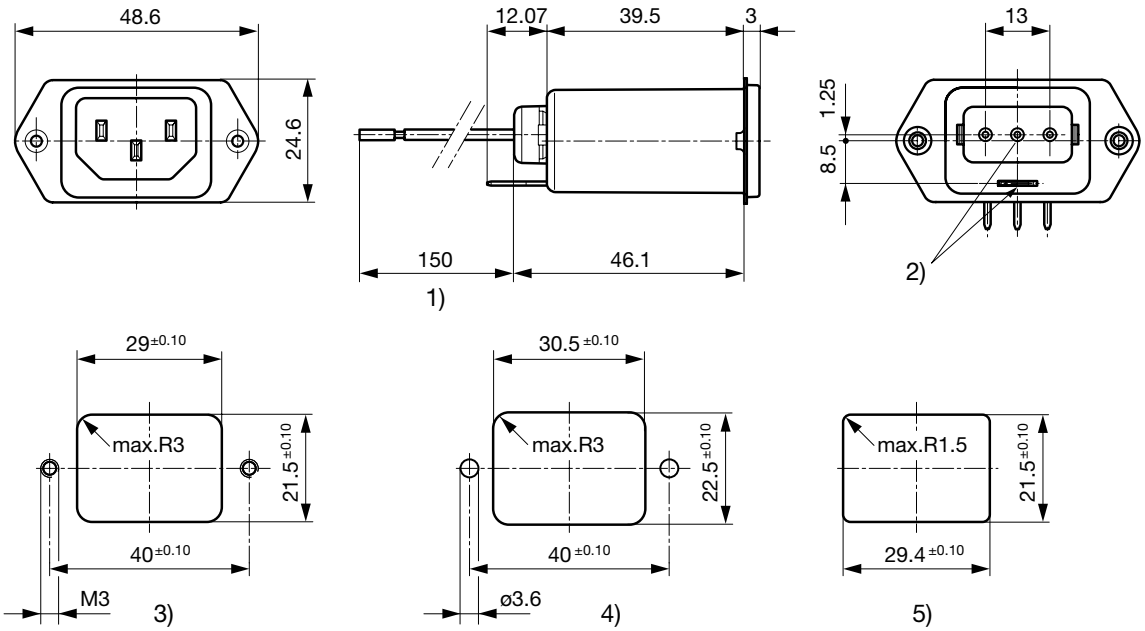

1) Flexible wire, standard length 150 mm or special length on request
2) Nonexistent for protection class II
3) Panel cut-out screw-on version, back-side mounting
4) Panel cut-out screw-on version, front- or back-side mounting
5) Panel cut-out snap-in version, front-side mounting

Technical Data of Filter-Components

Rated Current [A]	Filter-Type	Inductances L [mH]	Capacitance CX [nF]	Capacitance CY [nF]	R [MΩ]
1	Standard Version	2 x 12	100	2.2	-
2	Standard Version	2 x 5.2	100	2.2	-
4	Standard Version	2 x 2	100	2.2	-
6	Standard Version	2 x 0.8	100	2.2	-
10	Standard Version	2 x 0.4	100	2.2	-
15	Standard Version	2 x 0.1	100	2.2	-
1	Medical Version (M5)	2 x 12	100	-	1
2	Medical Version (M5)	2 x 5.2	100	-	1
4	Medical Version (M5)	2 x 2	100	-	1
6	Medical Version (M5)	2 x 0.8	100	-	1
10	Medical Version (M5)	2 x 0.4	100	-	1
15	Medical Version (M5)	2 x 0.1	100	-	1
1	Bleed Resistor Version	2 x 12	100	2.2	1
2	Bleed Resistor Version	2 x 5.2	100	2.2	1
4	Bleed Resistor Version	2 x 2	100	2.2	1
6	Bleed Resistor Version	2 x 0.8	100	2.2	1
10	Bleed Resistor Version	2 x 0.4	100	2.2	1
15	Bleed Resistor Version	2 x 0.1	100	2.2	1

Diagrams

Standard version

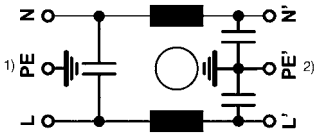

1) Line
2) Load

Bleed resistor version

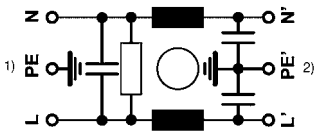

1) Line
2) Load

Medical version M5

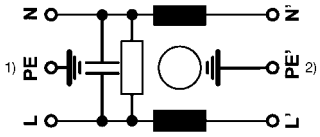

1) Line
2) Load

Medical version M5, prot. class II

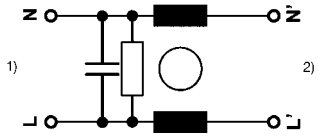

1) Line
2) Load

Attenuation Loss

- - - - differential mode _____ common mode

Standard version

1 A

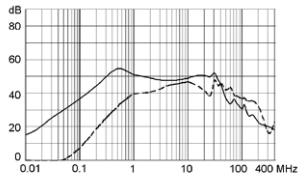

2 A

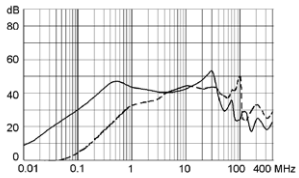

4 A

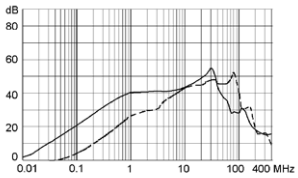

6 A

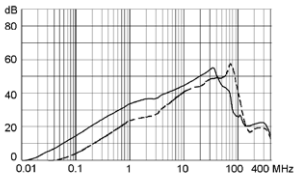

10 A

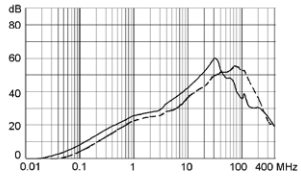

15 A

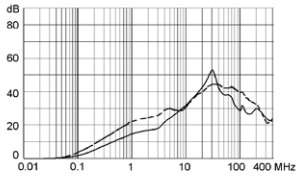

Medical version (M5)

1 A

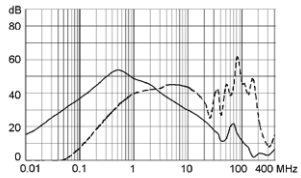

2 A

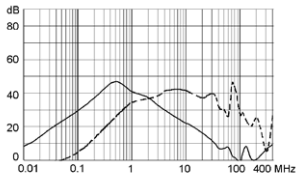

4 A

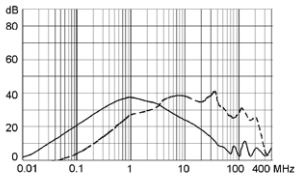

6 A

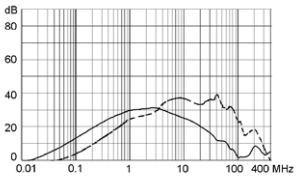

10 A

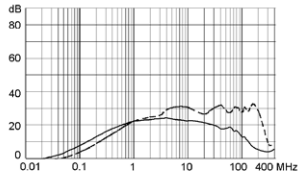

15 A

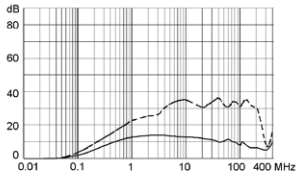

Variants

Rated Current [A]	Filter-Type	Mounting	Mounting side	Terminal	Protection Class	Order Number
1	Standard Version	Screw/PCB snap-in	Rear-Side	PCB pin and earth pin 6.3 x 0.8	1	5120.5070.0
2	Standard Version	Screw/PCB snap-in	Rear-Side	PCB pin and earth pin 6.3 x 0.8	1	5120.5071.0
4	Standard Version	Screw/PCB snap-in	Rear-Side	PCB pin and earth pin 6.3 x 0.8	1	5120.5073.0
6	Standard Version	Screw/PCB snap-in	Rear-Side	PCB pin and earth pin 6.3 x 0.8	1	5120.5074.0
10	Standard Version	Screw/PCB snap-in	Rear-Side	PCB pin and earth pin 6.3 x 0.8	1	5120.5076.0
15	Standard Version	Screw/PCB snap-in	Rear-Side	PCB pin and earth pin 6.3 x 0.8	1	5120.5077.0
1	Standard Version	Screw/PCB	Rear-Side	PCB pin and earth pin 6.3 x 0.8	1	5120.4070.0
2	Standard Version	Screw/PCB	Rear-Side	PCB pin and earth pin 6.3 x 0.8	1	5120.4071.0
4	Standard Version	Screw/PCB	Rear-Side	PCB pin and earth pin 6.3 x 0.8	1	5120.4073.0
6	Standard Version	Screw/PCB	Rear-Side	PCB pin and earth pin 6.3 x 0.8	1	5120.4074.0
10	Standard Version	Screw/PCB	Rear-Side	PCB pin and earth pin 6.3 x 0.8	1	5120.4076.0
15	Standard Version	Screw/PCB	Rear-Side	PCB pin and earth pin 6.3 x 0.8	1	5120.4077.0
1	Standard Version	Screw-on/Rivet	Front-/Rear-Side	Quick connect terminals 6.3 x 0.8 mm	1	5120.0000.0
1	Standard Version	Screw-on/Rivet	Front-/Rear-Side	Solder terminals	1	5120.0010.0
2	Standard Version	Screw-on/Rivet	Front-/Rear-Side	Quick connect terminals 6.3 x 0.8 mm	1	5120.0001.0
4	Standard Version	Screw-on/Rivet	Front-/Rear-Side	Quick connect terminals 6.3 x 0.8 mm	1	5120.0003.0
6	Standard Version	Screw-on/Rivet	Front-/Rear-Side	Quick connect terminals 6.3 x 0.8 mm	1	5120.0004.0
10	Standard Version	Screw-on/Rivet	Front-/Rear-Side	Quick connect terminals 6.3 x 0.8 mm	1	5120.0006.0
15	Standard Version	Screw-on/Rivet	Front-/Rear-Side	Quick connect terminals 6.3 x 0.8 mm	1	5120.0007.0
15	Standard Version	Screw-on/Rivet	Front-/Rear-Side	Flexible wire AWG16, Ground: solder	1	5120.0057.0
1	Standard Version	Screw	Rear-Side	Quick connect terminals 6.3 x 0.8 mm	1	5120.1000.0
2	Standard Version	Screw	Rear-Side	Quick connect terminals 6.3 x 0.8 mm	1	5120.1001.0
4	Standard Version	Screw	Rear-Side	Quick connect terminals 6.3 x 0.8 mm	1	5120.1003.0
6	Standard Version	Screw	Rear-Side	Quick connect terminals 6.3 x 0.8 mm	1	5120.1004.0
10	Standard Version	Screw	Rear-Side	Quick connect terminals 6.3 x 0.8 mm	1	5120.1006.0
10	Standard Version	Screw	Rear-Side	Flexible wire and Earth pin 6.3 x 0.8	1	5120.1046.0
15	Standard Version	Screw	Rear-Side	Quick connect terminals 6.3 x 0.8 mm	1	5120.1007.0
6	Standard Version	Snap-in >2 - 3 mm	Front-Side	Flexible wire AWG18	1	5120.3034.0
1	Standard Version	Snap-in	Front-Side	Quick connect terminals 6.3 x 0.8 mm	1	5120.2000.0
2	Standard Version	Snap-in	Front-Side	Quick connect terminals 6.3 x 0.8 mm	1	5120.2001.0
4	Standard Version	Snap-in	Front-Side	Quick connect terminals 6.3 x 0.8 mm	1	5120.2003.0
6	Standard Version	Snap-in	Front-Side	Quick connect terminals 6.3 x 0.8 mm	1	5120.2004.0
10	Standard Version	Snap-in	Front-Side	Quick connect terminals 6.3 x 0.8 mm	1	5120.2006.0
10	Standard Version	Snap-in	Front-Side	Flexible wire and Earth pin 6.3 x 0.8	1	5120.2046.0
15	Standard Version	Snap-in	Front-Side	Quick connect terminals 6.3 x 0.8 mm	1	5120.2007.0
4	Medical Version (M5)	Screw/PCB snap-in	Rear-Side	PCB pin and earth pin 6.3 x 0.8	1	5120.5373.0
6	Medical Version (M5)	Screw/PCB snap-in	Rear-Side	PCB pin and earth pin 6.3 x 0.8	1	5120.5374.0
4	Medical Version (M5)	Screw/PCB	Rear-Side	PCB pin and earth pin 6.3 x 0.8	1	5120.4373.0
6	Medical Version (M5)	Screw/PCB	Rear-Side	PCB pin and earth pin 6.3 x 0.8	1	5120.4374.0
1	Medical Version (M5)	Screw-on/Rivet	Front-/Rear-Side	Quick connect terminals 6.3 x 0.8 mm	1	5120.0300.0
2	Medical Version (M5)	Screw-on/Rivet	Front-/Rear-Side	Quick connect terminals 6.3 x 0.8 mm	1	5120.0301.0
4	Medical Version (M5)	Screw-on/Rivet	Front-/Rear-Side	Quick connect terminals 6.3 x 0.8 mm	1	5120.0303.0
4	Medical Version (M5)	Screw-on/Rivet	Front-/Rear-Side	Flexible wire and Earth pin 6.3 x 0.8	1	5120.0343.0
6	Medical Version (M5)	Screw-on/Rivet	Front-/Rear-Side	Quick connect terminals 6.3 x 0.8 mm	1	5120.0304.0
10	Medical Version (M5)	Screw-on/Rivet	Front-/Rear-Side	Quick connect terminals 6.3 x 0.8 mm	1	5120.0306.0
15	Medical Version (M5)	Screw-on/Rivet	Front-/Rear-Side	Quick connect terminals 6.3 x 0.8 mm	1	5120.0307.0
1	Medical Version (M5)	Screw	Rear-Side	Quick connect terminals 6.3 x 0.8 mm	1	5120.1300.0
2	Medical Version (M5)	Screw	Rear-Side	Quick connect terminals 6.3 x 0.8 mm	1	5120.1301.0
4	Medical Version (M5)	Screw	Rear-Side	Quick connect terminals 6.3 x 0.8 mm	1	5120.1303.0
6	Medical Version (M5)	Screw	Rear-Side	Quick connect terminals 6.3 x 0.8 mm	1	5120.1304.0
10	Medical Version (M5)	Screw	Rear-Side	Quick connect terminals 6.3 x 0.8 mm	1	5120.1306.0
10	Medical Version (M5)	Screw	Rear-Side	Flexible wire and Earth pin 6.3 x 0.8	1	5120.1346.0
15	Medical Version (M5)	Screw	Rear-Side	Quick connect terminals 6.3 x 0.8 mm	1	5120.1307.0
1	Medical Version (M5)	Snap-in	Front-Side	Quick connect terminals 6.3 x 0.8 mm	1	5120.2300.0

Rated Current [A]	Filter-Type	Mounting	Mounting side	Terminal	Protection Class	Order Number
2	Medical Version (M5)	Snap-in	Front-Side	Quick connect terminals 6.3 x 0.8 mm	1	5120.2301.0
4	Medical Version (M5)	Snap-in	Front-Side	Quick connect terminals 6.3 x 0.8 mm	1	5120.2303.0
6	Medical Version (M5)	Snap-in	Front-Side	Quick connect terminals 6.3 x 0.8 mm	1	5120.2304.0
10	Medical Version (M5)	Snap-in	Front-Side	Quick connect terminals 6.3 x 0.8 mm	1	5120.2306.0
15	Medical Version (M5)	Snap-in	Front-Side	Quick connect terminals 6.3 x 0.8 mm	1	5120.2307.0
4	Medical Version (M5)	Screw/PCB snap-in	Rear-Side	PCB pin and earth pin 6.3 x 0.8	2	5120.5373.1
6	Medical Version (M5)	Screw/PCB snap-in	Rear-Side	PCB pin and earth pin 6.3 x 0.8	2	5120.5374.1
10	Medical Version (M5)	Screw/PCB snap-in	Rear-Side	PCB pin and earth pin 6.3 x 0.8	2	5120.5376.1
4	Medical Version (M5)	Screw/PCB	Rear-Side	PCB pin and earth pin 6.3 x 0.8	2	5120.4373.1
6	Medical Version (M5)	Screw/PCB	Rear-Side	PCB pin and earth pin 6.3 x 0.8	2	5120.4374.1
1	Medical Version (M5)	Screw-on/Rivet	Front-/Rear-Side	Quick connect terminals 6.3 x 0.8 mm	2	5120.0300.1
2	Medical Version (M5)	Screw-on/Rivet	Front-/Rear-Side	Quick connect terminals 6.3 x 0.8 mm	2	5120.0301.1
4	Medical Version (M5)	Screw-on/Rivet	Front-/Rear-Side	Quick connect terminals 6.3 x 0.8 mm	2	5120.0303.1
6	Medical Version (M5)	Screw-on/Rivet	Front-/Rear-Side	Quick connect terminals 6.3 x 0.8 mm	2	5120.0304.1
10	Medical Version (M5)	Screw-on/Rivet	Front-/Rear-Side	Quick connect terminals 6.3 x 0.8 mm	2	5120.0306.1
10	Medical Version (M5)	Screw-on/Rivet	Front-/Rear-Side	Solder terminals	2	5120.0316.1
15	Medical Version (M5)	Screw-on/Rivet	Front-/Rear-Side	Quick connect terminals 6.3 x 0.8 mm	2	5120.0307.1
1	Medical Version (M5)	Screw	Rear-Side	Quick connect terminals 6.3 x 0.8 mm	2	5120.1300.1
2	Medical Version (M5)	Screw	Rear-Side	Quick connect terminals 6.3 x 0.8 mm	2	5120.1301.1
2	Medical Version (M5)	Screw	Rear-Side	Solder terminals	2	5120.1311.1
4	Medical Version (M5)	Screw	Rear-Side	Quick connect terminals 6.3 x 0.8 mm	2	5120.1303.1
6	Medical Version (M5)	Screw	Rear-Side	Quick connect terminals 6.3 x 0.8 mm	2	5120.1304.1
10	Medical Version (M5)	Screw	Rear-Side	Quick connect terminals 6.3 x 0.8 mm	2	5120.1306.1
15	Medical Version (M5)	Screw	Rear-Side	Quick connect terminals 6.3 x 0.8 mm	2	5120.1307.1
1	Medical Version (M5)	Snap-in	Front-Side	Quick connect terminals 6.3 x 0.8 mm	2	5120.2300.1
2	Medical Version (M5)	Snap-in	Front-Side	Quick connect terminals 6.3 x 0.8 mm	2	5120.2301.1
4	Medical Version (M5)	Snap-in	Front-Side	Quick connect terminals 6.3 x 0.8 mm	2	5120.2303.1
6	Medical Version (M5)	Snap-in	Front-Side	Quick connect terminals 6.3 x 0.8 mm	2	5120.2304.1
10	Medical Version (M5)	Snap-in	Front-Side	Quick connect terminals 6.3 x 0.8 mm	2	5120.2306.1
15	Medical Version (M5)	Snap-in	Front-Side	Quick connect terminals 6.3 x 0.8 mm	2	5120.2307.1
1	Bleed Resistor Version	Screw-on/Rivet	Front-/Rear-Side	Quick connect terminals 6.3 x 0.8 mm	1	5120.0200.0
2	Bleed Resistor Version	Screw-on/Rivet	Front-/Rear-Side	Quick connect terminals 6.3 x 0.8 mm	1	5120.0201.0
4	Bleed Resistor Version	Screw-on/Rivet	Front-/Rear-Side	Quick connect terminals 6.3 x 0.8 mm	1	5120.0203.0
6	Bleed Resistor Version	Screw-on/Rivet	Front-/Rear-Side	Quick connect terminals 6.3 x 0.8 mm	1	5120.0204.0
10	Bleed Resistor Version	Screw-on/Rivet	Front-/Rear-Side	Quick connect terminals 6.3 x 0.8 mm	1	5120.0206.0
10	Bleed Resistor Version	Screw-on/Rivet	Front-/Rear-Side	Solder terminals	1	5120.0216.0
15	Bleed Resistor Version	Screw-on/Rivet	Front-/Rear-Side	Quick connect terminals 6.3 x 0.8 mm	1	5120.0207.0
1	Bleed Resistor Version	Screw	Rear-Side	Quick connect terminals 6.3 x 0.8 mm	1	5120.1200.0
2	Bleed Resistor Version	Screw	Rear-Side	Quick connect terminals 6.3 x 0.8 mm	1	5120.1201.0
4	Bleed Resistor Version	Screw	Rear-Side	Quick connect terminals 6.3 x 0.8 mm	1	5120.1203.0
6	Bleed Resistor Version	Screw	Rear-Side	Quick connect terminals 6.3 x 0.8 mm	1	5120.1204.0
10	Bleed Resistor Version	Screw	Rear-Side	Quick connect terminals 6.3 x 0.8 mm	1	5120.1206.0
15	Bleed Resistor Version	Screw	Rear-Side	Quick connect terminals 6.3 x 0.8 mm	1	5120.1207.0
1	Bleed Resistor Version	Snap-in	Front-Side	Quick connect terminals 6.3 x 0.8 mm	1	5120.2200.0
2	Bleed Resistor Version	Snap-in	Front-Side	Quick connect terminals 6.3 x 0.8 mm	1	5120.2201.0
4	Bleed Resistor Version	Snap-in	Front-Side	Quick connect terminals 6.3 x 0.8 mm	1	5120.2203.0
6	Bleed Resistor Version	Snap-in	Front-Side	Quick connect terminals 6.3 x 0.8 mm	1	5120.2204.0
10	Bleed Resistor Version	Snap-in	Front-Side	Quick connect terminals 6.3 x 0.8 mm	1	5120.2206.0
15	Bleed Resistor Version	Snap-in	Front-Side	Quick connect terminals 6.3 x 0.8 mm	1	5120.2207.0

- 15 A version only according UL/CSA

- Type for screw-on mounting from rear side has pre-threaded holes for M3 screws

".21" corresponds to the version with V-Lock mating cordset. The connector is equipped with a notch intended for use with the latching cordset. The cord latching system prevents against accidental removal of the cordset.

Packaging unit 10 Pcs

Accessories

Description

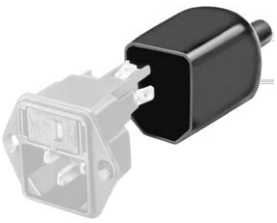

Assorted Covers
Rear Cover

	0859.0048

Wire Harness
Wire harness for SCHURTER products

Cord retaining kits
Cord retaining strain relief

Flat head, Z	0888.0021
Flat head, E	4700.0005
Flat head, G	4700.0007

Mating Outlets/Connectors

Category / Description

Appliance OutletOverview complete

IEC Appliance Outlet F, Screw-on Mounting, Front Side, Solder Terminal	4787
IEC Appliance Outlet F, Snap-in Mounting, Front Side, Solder or Quick-connect Terminal	4788
IEC Appliance Outlet F or H, Screw-on Mounting, Front Side, Solder, PCB or Quick-connect Terminal	5091
IEC Appliance Outlet F or H, Screw-on Mounting, Front Side, Solder or Quick-connect Terminal	5092
Appliance Outletfurther types to5120	

ConnectorOverview complete

IEC Connector C15, Rewireable, Straight	0101
IEC Connector C15A, Rewireable, Straight	0102
IEC Connector C15A, Rewireable, Straight	0102-G
IEC Connector C15A, Rewireable, Angled	0112
IEC Connector C13, Rewireable, Angled	4012
Connectorfurther types to5120	...

Power CordOverview complete

Power Cord with IEC Connector C13, Angled	0311
Power Cord with IEC Connector C13, Angled	3011
Power Cord with IEC Connector C13, Angled	3012
Power Cord with IEC Connector C13, Angled	3013
Power Cord with IEC Connector C13	3020
Power Cordfurther types to5120	...

The specifications, descriptions and illustrations indicated in this document are based on current information. All content is subject to modifications and amendments.