Part Number : 5055680972
Product Description : 1.25mm Pitch, Micro-Lock Plus PCB Header, Single Row, Vertical, Surface Mount, Tin-Bismuth Plating, Positive Lock, 9 Circuits, with Pick-and-Place Tape, Red
Series Number : 505568
Status : Active
Product Category : PCB Headers and Receptacles

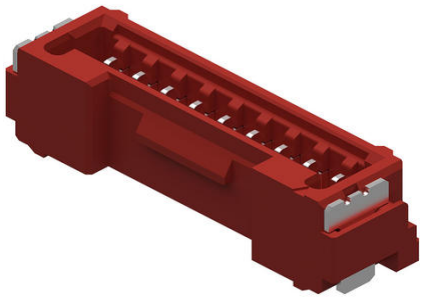

Documents and Resources

Drawings

5055680972_sd.pdf

3D Models and Design Files

STEP AP242

SOLIDWORKS

Creo

Symbol and Footprint (Multi-Format)

5055680972.dxf

Specifications

5055650000-AS-000.pdf

5055689200-200.pdf

2145260000-PS-000.pdf

5055650000-000.pdf

5055651000-PS-000.pdf

Product Environment Compliance

Compliance

GADSL/IMDS	Compliant with Exemption 44; 33
China RoHS	per SJ/T 11365-2006
EU ELV	Not Relevant
Low-Halogen Status	Not Low-Halogen per IEC 61249-2-21

REACH SVHC	Not Contained per D(2025)4165-DC (25 June 2025)
EU RoHS	Compliant per EU 2015/863

Compliance Statements

- EU RoHS
- REACH SVHC
- Low-Halogen

Industry Documents

- IPC 1752A Class C
- IPC 1752A Class D
- Molex Product Compliance Declaration
- IEC-62474
- chemSHERPA (xml)

Substances of Interest

- PFAS

EU RoHS Certificate of Compliance

Additional Product Compliance Information

Part Details

General

Status	Active
Category	PCB Headers and Receptacles
Series	505568
Description	1.25mm Pitch, Micro-Lock Plus PCB Header, Single Row, Vertical, Surface Mount, Tin-Bismuth Plating, Positive Lock, 9 Circuits, with Pick-and-Place Tape, Red
Application	Signal, Wire-to-Board
Component Type	PCB Header
Product Name	Micro-Lock Plus
UPC	889056556767

Agency

UL	E29179

Electrical

Current - Maximum per Contact	1.5A
Voltage - Maximum	50V AC (RMS)/DC

Physical

Breakaway	No
Circuits (Loaded)	9
Circuits (maximum)	9
Color - Resin	Red
Durability (mating cycles max)	30
First Mate / Last Break	No
Glow-Wire Capable	No
Guide to Mating Part	No
Keying to Mating Part	Yes
Lock to Mating Part	Yes
Material - Metal	Brass
Material - Plating Mating	Tin-Bismuth
Material - Plating Termination	Tin-Bismuth
Material - Resin	Polyamide
Net Weight	275.994/mg
Number of Rows	1
Orientation	Vertical
Packaging Type	Embossed Tape on Reel
PCB Locator	No
PCB Retention	Yes
Pitch - Mating Interface	1.25mm
Pitch - Termination Interface	1.25mm
Plating min - Mating	1.000µm
Plating min - Termination	1.000µm
Polarized to Mating Part	Yes
Polarized to PCB	Yes
Robotic Placement	Vacuum Pick-Up Tape
Shrouded	Fully
Stackable	No
Temperature Range - Operating	-40° to +105°C
Termination Interface Style	Surface Mount

Mates With / Use With

Mates with Part(s)

Description	Part Number
1.25mm Pitch, Micro-Lock Plus Single Row Receptacle Housings	505565
1.25mm Pitch Micro-Lock Plus TPA Type Single Row Receptacle Housings	214526