MQS Interconnection

for the Automotive Industry

TE connectivity

AUTOMOTIVE

Driver Information

Powertrain Systems

THE 5 APPLICATION AREAS

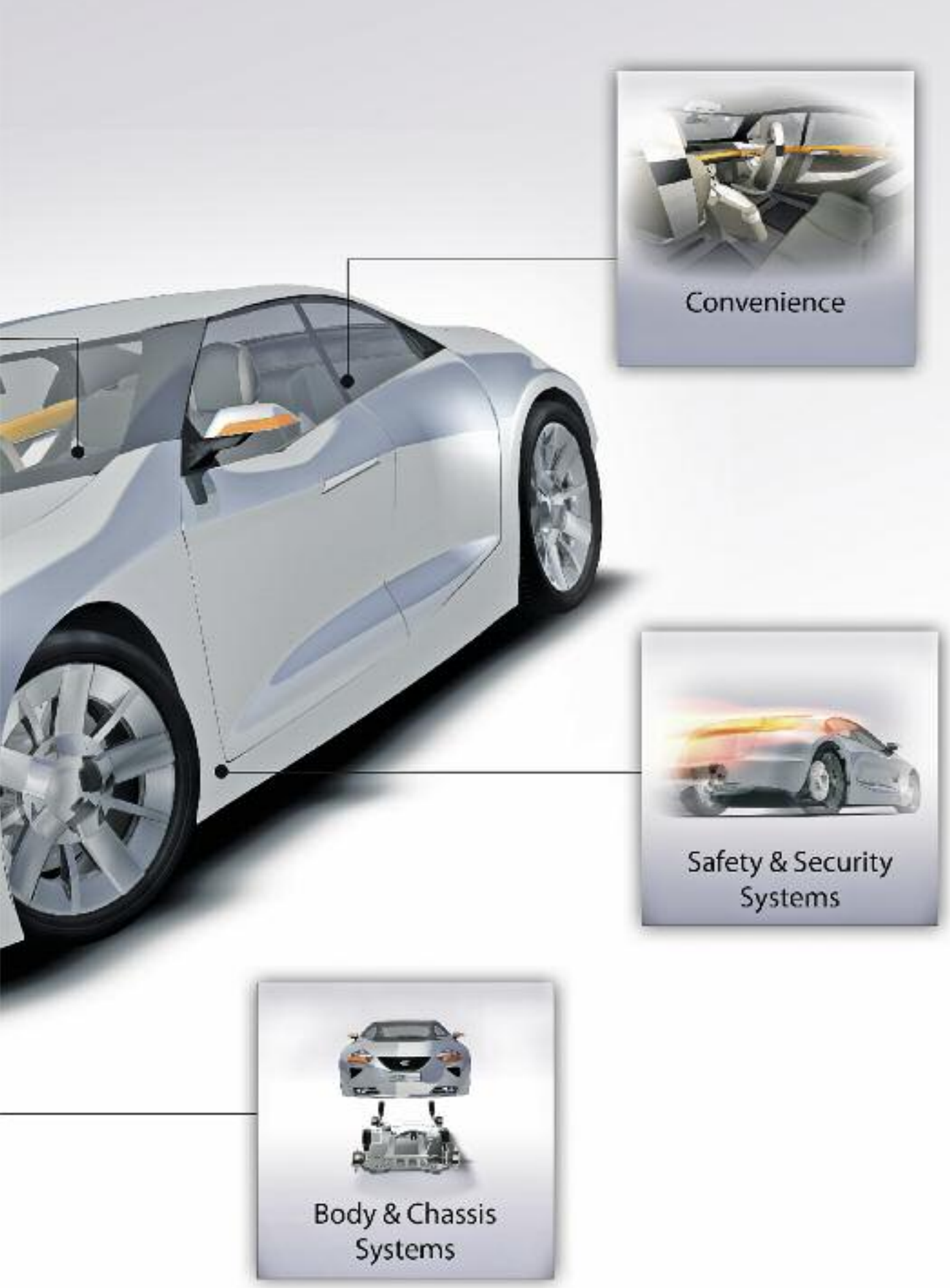

INNOVATIVE TECHNOLOGIES

TE Automotive – a business segment of TE Connectivity – follows the globalization goals of our customers, speeds up the integration of new technologies and enables our customers access to our vast product portfolio and services.

TERMINALS & CONNECTORS

TE Automotive offers a broad range of high quality terminals and connectors. Our electrical/electronic interconnection products and solutions are used to electrically and mechanically join wires and cables, printed circuit boards, integrated circuit packages and batteries. TE Automotive expanding capabilities include new copper and fiber-optic connectors, wires, cables/cable management systems that are designed to meet automotive industry demands. Our brands encompass the broadest range of connectors in the world, including high-density, high-speed designs for leading-edge communications equipment.

HYBRID & ELECTRIC MOBILITY SOLUTIONS

Complete the connections you need to safely, and reliably make hybrid and electric mobility a reality for everyone, everyday. With over 50 years experience in automotive, industrial and energy connectivity, TE is an expert in pushing innovation from one industry to the next. Our portfolio of AMP+ high voltage relays, resistors, AMP+ headers, connectors, IPT/APT and cable assemblies and vehicle charging solutions are designed to connect and protect electric distribution inside and outside of the vehicle.

CABLE ASSEMBLY SYSTEMS

TE Automotive is your partner for special cable assemblies.
We offer research and development capabilities, prototyping, samples as well as manufacturing facilities for special cable assemblies. This includes overmold technology, semi/fully automatic manufacturing, testing equipment and appliances for handling of high volume production.

SENSORS

Contact-less measuring eliminates interference effects, wear and tear, and provides increased reliability. TE Automotive, one of the largest technology providers for the automobile industry, offers contact-less sensors for a variety of applications.

As sensor manufacturer and processing partner, TE Automotive also provides project planning support for new sensor applications, assistance in the selection of the appropriate sensor technology for the respective application, and assistance with defining the corresponding mechanical, electrical and magnetic interface.

TE Automotive has a broad electro-mechanical portfolio that includes robust housing technologies, connector systems, and temperature stable designs based on foil and cable networks. This combination of technologies and experience ensures that reliable and cost effective sensor solutions are available for all application types.

INFOTAINMENT

TE Automotive is focused on providing the best in class infotainment technology to support high speed data communication in the automotive industry. Data communication based optical, coaxial as well as shielded electrical physical layers are supported by a wide product portfolio of Automotive grade connector systems.

Through a deep understanding of the technical properties and requirements of signal integrity and combined with our application knowledge both in the vehicle as well as in the logistics chain, TE Automotive is well positioned to offer the right solution for all current and next generation Infotainment Systems.

INDUCTIVE COIL SYSTEMS

TE Automotive is your source for interconnection technologies for automotive, truck and off-highway OEMs and Tier 1 suppliers. With our global design center in Belgium and manufacturing sites in all regions, TE Automotive's Inductive Coil Systems (ICS) group is ready to design your next-generation coil modules and provide local production support.

The ICS group maintains a leading market position in braking modules and other automotive coil applications. Through early involvement with you on your next design, TE Automotive can offer the benefits of miniaturization, design-in of platform components and optimized process flow for your standard, hybrid and electric vehicle project needs.

TE Automotive Online

The TE Automotive website is an innovative and interactive source for application information, product updates and technical solutions.

Please contact us at:
www.te.com/automotive

TE Products

www.te.com/en/products/product-landing.html

Product and Machine Literature

TE Automotive offers a variety of product specific catalogs, brochures and high impact flyers to help better serve you!

For more information on literature for TE Automotive, please contact your local organization or go to **www.te.com/automotive**

Product Information Center (PIC)

You can rely on TE Connectivity's PIC Team to provide you support for answers to your general information or technical questions in an efficient and effective manner.

To reach our PIC staff, please contact your local organization or see our Global Contacts page.

Please contact us at:
www.te.com/support-center/

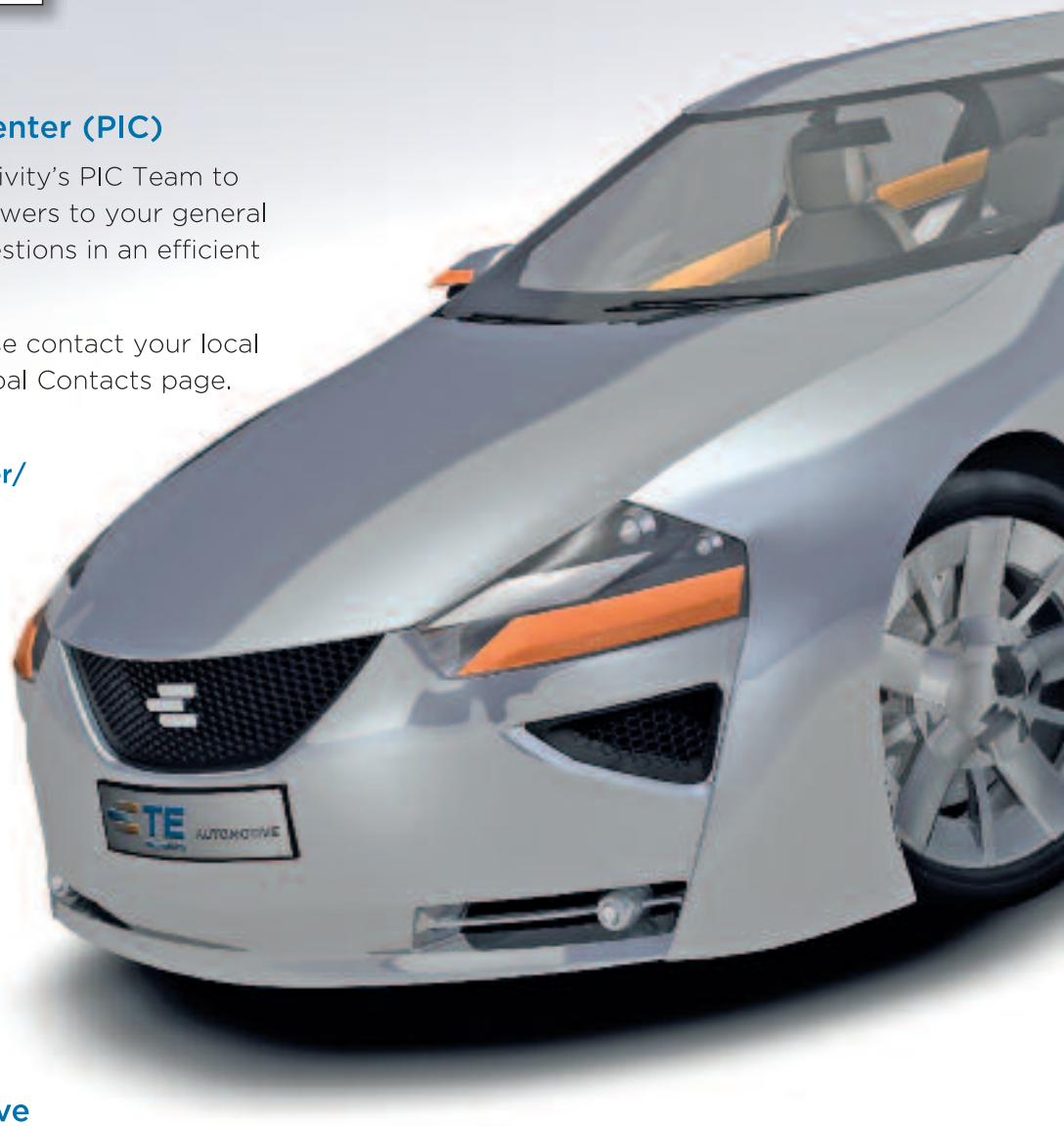

www.te.com
www.te.com/automotive
www.te.com/automotive/most

Quality Guidelines

Incorrect

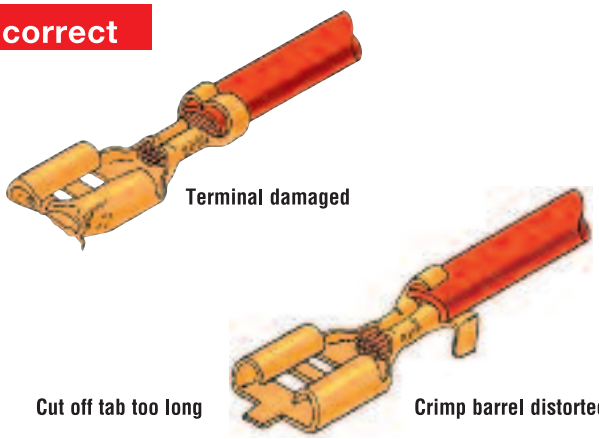

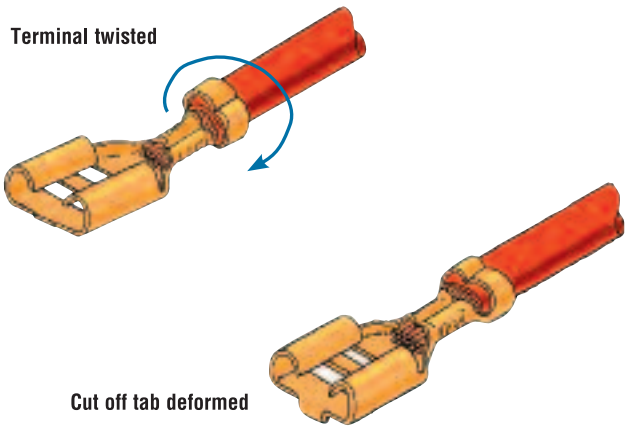

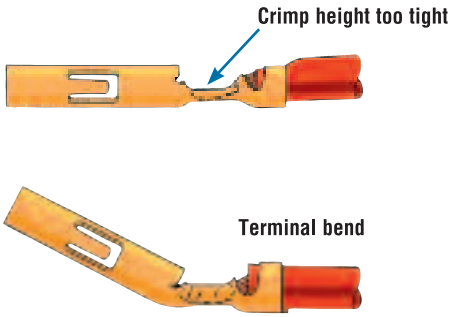

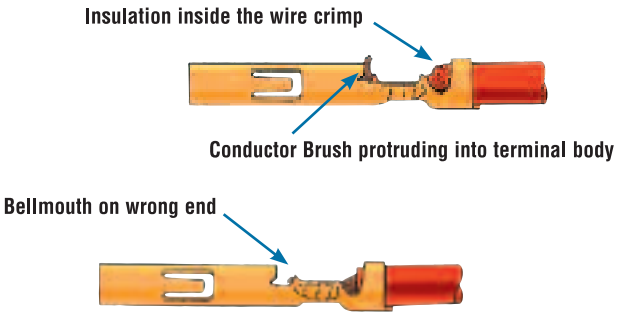

INSULATION CRIMP

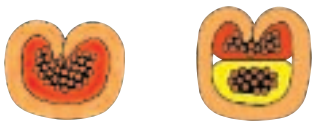

Insulation is pierced and could damage conductor

Insulation material is pierced

Insulation is not securely held

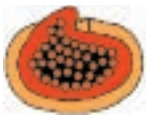

Insulation is over crimped

Insulation legs are not closed

Insulation is not securely held
Legs do not overlap

WIRE CRIMP

Incorrect applicator adjustment

Asymmetric crimp

Terminal feed incorrectly adjusted

Unacceptable formation excessive flash and/or cracks

Anvil and crimper not aligned or worn

Incorrect terminal/wire selection

Wire size too large

Crimp barrel does not close

Wire size too small

Legs too close to bottom of crimp. Insufficient deformation of strands, showing voids

Incorrect crimp height adjustment

Crimp height too loose

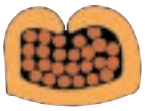

Insufficient deformation, showing voids

Crimp height too tight

Flash at under side of crimp, due to over crimping

All specifications subject to change. Consult TE Connectivity for latest specifications.

Correct

WIRE CRIMP

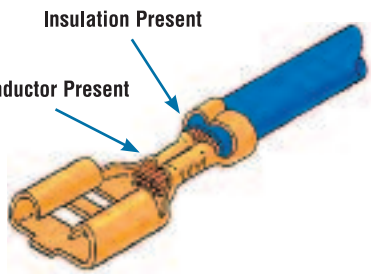

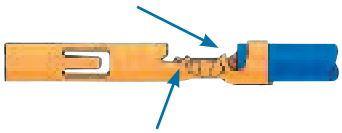

Correct selection of wire, terminal and applicator

Crimp barrel is closed, legs support each other

Sufficient gap between legs and bottom of crimp

All strands are equally distributed and deformed

INSULATION CRIMP

Correct Insulation Diameter, Applicator and Terminal

F-CRIMP

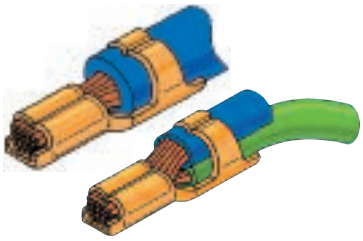

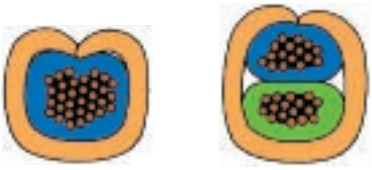

Insulation is securely held
Crimp barrel closed

For double wire applications with different size wires always place wire with smallest outer diameter in the bottom

OVERLAP CRIMP

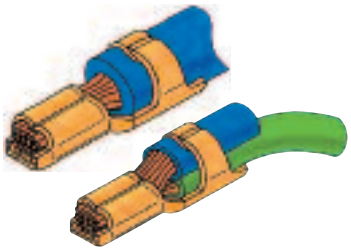

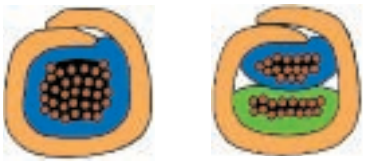

Insulation is securely held
Legs overlap

WRAP OVER CRIMP

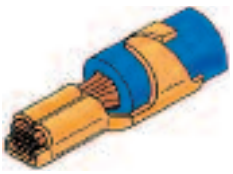

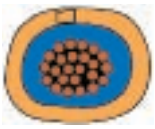

Insulation securely held
Legs must pass each other

Test

WIRE CRIMP

Crimp height measurement

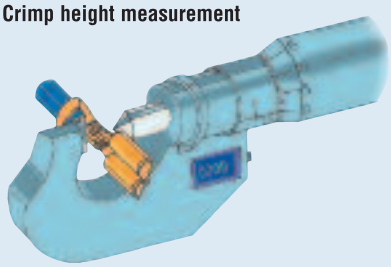

Crimp heights and tolerances

For crimp height tolerances for any given contact, please refer to the relevant application specification.

Examples:

Con-tact	Part No.	Wire Range (mm^2)	Toler-ance (mm)	Appli-cation Spec.
MQS	962885 962886	0.2–0.5	±0.03	114-18025
JPT	927775	0.5–1.0	±0.05	114-18050
JPT	927773	1.5–2.5	±0.05	114-18050

Digital Crimp Height Micrometer
(0.001 mm increments) acc. to DIN ISO 9001
Part No. 547203-1

INSULATION CRIMP

Wire crimp without conductor

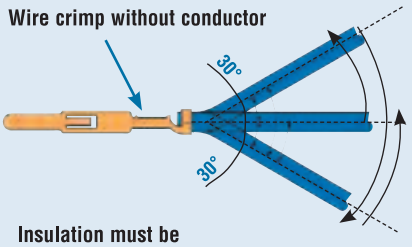

Insulation must be securely held after bend test

IP Code (Elements and Significance acc. to IEC 60529 and DIN 40050)

1st Digit	Against Foreign Objects (incl. Dust)	
0		Not protected.
1	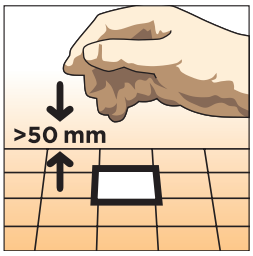	Protected against solid objects greater than 50 mm (ex. back of hand).
2	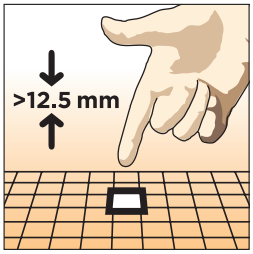	Protected against solid objects greater than 12.5 mm (ex. finger).
3	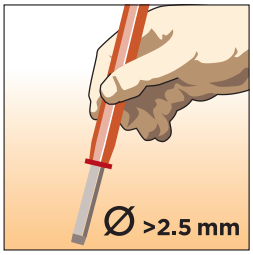	Protected against solid objects greater than 2.5 mm (ex. tool).
4	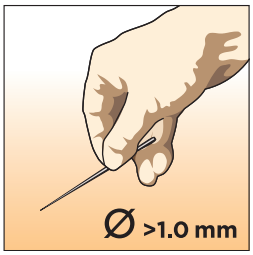	Protected against solid objects greater than 1.0 mm (ex. wire).

1st Digit	Against Foreign Objects (incl. Dust)	
5K		Dust protected.
6K		Dust tight.

All specifications subject to change. Consult TE Connectivity for latest specifications.

IP Code (Elements and Significance acc. to IEC 60529 and DIN 40050)

2nd Digit	Against Water		2nd Digit	Against Water	
0		Not protected.	5		Protected against jetting water.
1		Protected against vertically dripping water.	6		Protected against powerfully jetting water.
2	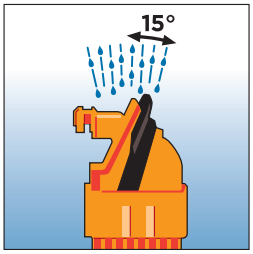	Protected against dripping water when tilted up to 15°.	6K		Protected against powerfully jetting water with increased pressure (Automotive).
3	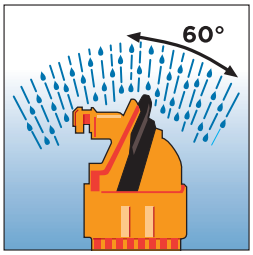	Protected against spraying water (up to 60° inclination).	7	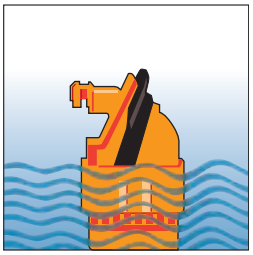	Protected against the temporary effects of immersion up to 1 meter.
4	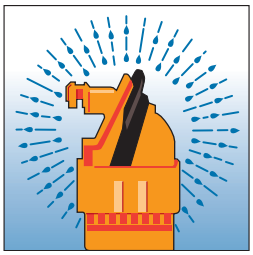	Protected against splashing water.	8	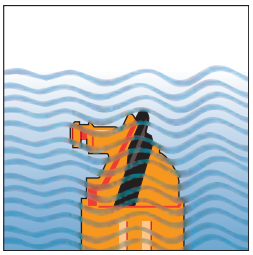	Protected against continuous submersion agreed with customer, but more severe than code 7.
4K		Protected against splashing water with increased pressure.	9K		Protected against high-pressure/ steam-jet cleaning (Automotive).

Restriction on the use of Hazardous Substances (RoHS)

At TE Connectivity, we're ready to support your RoHS requirements. We've assessed more than 1.5 million end items/components for RoHS compliance, and issued new part numbers where any change was required to eliminate the restricted materials. Part numbers in this catalog are identified as:

RoHS Compliant

Part numbers in this catalog are RoHS Compliant, unless marked otherwise.

These products comply with European Union Directive 2002/95/EC as amended 1 January 2006 that restricts the use of lead, mercury, cadmium, hexavalent chromium, PBB, and PBDE in certain electrical and electronic products sold into the EU as of 1 July 2006.

Note: For purposes of this Catalog, included within the definition of RoHS Compliant are products that are clearly "Out of Scope" of the RoHS Directive such as hand tools and other non-electrical accessories.

Non-RoHS Compliant

These part numbers are identified with a "♦" symbol. These products do not comply with the material restrictions of the European Union Directive 2002/95/EC.

5 of 6 Compliant

A "●" symbol identifies these part numbers. These products do not fully comply with the European Union Directive 2002/95/EC because they contain lead in solderable interfaces (they do not contain any of the other five restricted substances above allowable limits). However, these products may be suitable for use in RoHS applications where there is an application-based exception for lead in solders, such as the server, storage, or networking infrastructure exemption.

Note: Information regarding RoHS compliance is provided based on reasonable inquiry of our suppliers and represents our current actual knowledge based on the information provided by our suppliers. This information is subject to change. For latest compliance status, refer to our website referenced below.

Getting the information you need

Our comprehensive on-line RoHS Customer Support Center provides a forum to answer your questions and support your RoHS needs. A RoHS FAQ (Frequently Asked Questions) is available with links to more detailed information. You can also submit RoHS questions and receive a response within 24 hours during a normal work week. The Support Center also provides:

- Cross-Reference from Non-compliant to Compliant Products
- Ability to browse RoHS Compliant Products in our on-line catalog: http://www.te.com/commerce/alt/RohsAltHome.do
- Downloadable Technical Data Customer Information Presentation
- More detailed information regarding the definitions used above

So whatever your questions when it comes to RoHS, we've got the answers at http://www.te.com/customersupport/rohssupportcenter/

RoHS Customer Support Center

All specifications subject to change. Consult TE Connectivity for latest specifications.

AWG Conversion Table (Average Value)

Conversion Tables

Most of the wire size ranges are mentioned in mm², as well as the insulation diameters which are in many cases only in mm's.

We therefore included the conversion tables on page X and page XI.

Please note that wire and insulation sizes are for guidance only.

Consult the customer drawing for precise detail.

AWG Code	Diameter (Inch)	Diameter (mm)	F (mm²)
000000	0.5800	14.733	170.0
00000	0.5165	13.13	135.0
0000	0.4600	11.684	103.8
000	0.4096	10.40	79.0
00	0.3648	9.27	67.5
0	0.3249	8.25	53.4
1	0.2893	7.34	42.2
2	0.2576	6.55	33.7
3	0.2294	5.82	26.6
4	0.2043	5.18	21.0
5	0.1819	4.62	16.9
6	0.1620	4.115	13.25
7	0.1443	3.66	10.25
8	0.1285	3.26	8.34
9	0.1144	2.90	6.6
10	0.1019	2.59	5.27
11	0.0907	2.30	4.15
12	0.0808	2.05	3.3
13	0.0720	1.83	2.63
14	0.0641	1.63	2.08
15	0.0571	1.45	1.65
16	0.0508	1.29	1.305
17	0.0453	1.14	1.01
18	0.0403	1.02	0.79
19	0.0359	0.91	0.65
20	0.0320	0.81	0.51
21	0.0285	0.72	0.407
22	0.0253	0.64	0.32
23	0.0226	0.57	0.255
24	0.0201	0.51	0.205
25	0.0179	0.455	0.162
26	0.0159	0.40	0.125
27	0.0142	0.36	0.102
28	0.0126	0.320	0.08
29	0.0113	0.287	0.0646
30	0.0100	0.254	0.0516
31	0.0089	0.226	0.04
32	0.0080	0.203	0.0324
33	0.0071	0.180	0.0255
34	0.0063	0.160	0.02
35	0.0056	0.142	0.0158
36	0.0050	0.127	0.0127
37	0.0045	0.114	0.01
38	0.0040	0.101	0.008
39	0.0035	0.089	0.0062
40	0.0031	0.079	0.0049
41	0.0028	0.071	0.00395
42	0.0025	0.064	0.00321
43	0.0022	0.056	0.00246
44	0.00198	0.050	0.00196
45	0.00176	0.045	
46	0.00157	0.040	
47	0.00140	0.036	
48	0.00124	0.031	
49	0.00110	0.028	
50	0.00099	0.025	

Remark: Starting from 0.03 mm² (AWG 32) a wire can be crimped.

FLK/FLR Cable

FLK and FLR stand for German DIN (72551) abbreviations.

FLK means:

In German:
- **F**ahrzeug **L**eitung **K**unststoff

In English:
- Vehicle Cable Plastic

FLR means:

In German:
- **F**ahrzeug **L**eitung **R**eduziert

In English:
- Thin Walled Cable (reduced insulation thickness)

Conversion Table – Inch/mm

Inch	0	0.001	0.002	0.003	0.004	0.005	0.006	0.007	0.008	0.009
0	0	0.0254	0.0508	0.0762	0.1016	0.1270	0.1524	0.1778	0.2032	0.2286
0.010	0.2540	0.2794	0.3048	0.3302	0.3556	0.3810	0.4064	0.4318	0.4572	0.4826
0.020	0.5080	0.5334	0.5588	0.5842	0.6096	0.6350	0.6604	0.6858	0.7112	0.7366
0.030	0.7620	0.7874	0.8128	0.8382	0.8636	0.8890	0.9144	0.9398	0.9652	0.9906
0.040	1.0160	1.0414	1.0668	1.0922	1.1176	1.1430	1.1684	1.1938	1.2192	1.2446
0.050	1.2700	1.2954	1.3208	1.3462	1.3716	1.3970	1.4224	1.4478	1.4732	1.4986
0.060	1.5240	1.5494	1.5748	1.6002	1.6256	1.6510	1.6764	1.7018	1.7272	1.7526
0.070	1.7780	1.8034	1.8288	1.8542	1.8796	1.9050	1.9304	1.9558	1.9812	2.0066
0.080	2.0320	2.0574	2.0828	2.1062	2.1336	2.1590	2.1844	2.2098	2.2352	2.2606
0.090	2.2860	2.3114	2.3368	2.3622	2.3876	2.4130	2.4384	2.4638	2.4892	2.5146
0.100	2.5400	2.5654	2.5908	2.6162	2.6416	2.6670	2.6924	2.7178	2.7432	2.7686
0.110	2.7940	2.8194	2.8448	2.8702	2.8956	2.9210	2.9464	2.9718	2.9972	3.0226
0.120	3.0480	3.0734	3.0988	3.1242	3.1496	3.1750	3.2004	3.2258	3.2512	3.2766
0.130	3.3020	3.3274	3.3528	3.3782	3.4036	3.4290	3.4544	3.4798	3.5052	3.5306
0.140	3.5560	3.5814	3.6068	3.6322	3.6576	3.6830	3.7084	3.7338	3.7592	3.7846
0.150	3.8100	3.8354	3.8608	3.8862	3.9116	3.9370	3.9624	3.9878	4.0132	4.0386
0.160	4.0640	4.0894	4.1148	4.1402	4.1656	4.1910	4.2164	4.2418	4.2672	4.2926
0.170	4.3180	4.3434	4.3688	4.3942	4.4196	4.4450	4.4704	4.4958	4.5212	4.5466
0.180	4.5720	4.5974	4.6228	4.6482	4.6736	4.6990	4.7244	4.7498	4.7752	4.8006
0.190	4.8260	4.8514	4.8768	4.9022	4.9276	4.9530	4.9784	5.0038	5.0292	5.0546
0.200	5.0800	5.1054	5.1308	5.1562	5.1816	5.2070	5.2324	5.2578	5.2832	5.3086
0.210	5.3340	5.3594	5.3848	5.4102	5.4356	5.4610	5.4864	5.5118	5.5372	5.5626
0.220	5.5880	5.6134	5.6388	5.6642	5.6896	5.7150	5.7404	5.7658	5.7912	5.8166
0.230	5.8420	5.8674	5.8928	5.9182	5.9436	5.9690	5.9944	6.0198	6.0452	6.0706
0.240	6.0960	6.1214	6.1468	6.1722	6.1976	6.2230	6.2484	6.2738	6.2992	6.3246
0.250	6.3500	6.3754	6.4008	6.4262	6.4516	6.4770	6.5024	6.5278	6.5532	6.5786
0.260	6.6040	6.6294	6.6548	6.6802	6.7056	6.7310	6.7564	6.7818	6.8072	6.8326
0.270	6.8580	6.8834	6.9088	6.9342	6.9596	6.9850	7.0104	7.0358	7.0612	7.0866
0.280	7.1120	7.1374	7.1628	7.1882	7.2136	7.2390	7.2644	7.2898	7.3152	7.3406
0.290	7.3660	7.3914	7.4168	7.4422	7.4676	7.4930	7.5184	7.5438	7.5692	7.5946
0.300	7.6200	7.6454	7.6708	7.6962	7.7216	7.7470	7.7724	7.7978	7.8232	7.8486
0.310	7.8740	7.8994	7.9248	7.9502	7.9756	8.0010	8.0264	8.0518	8.0772	8.1026
0.320	8.1280	8.1534	8.1788	8.2042	8.2296	8.2550	8.2804	8.3058	8.3312	8.3566
0.330	8.3820	8.4074	8.4328	8.4582	8.4836	8.5090	8.5344	8.5598	8.5852	8.6106
0.340	8.6360	8.6614	8.6868	8.7122	8.7376	8.7630	8.7884	8.8138	8.8392	8.8646
0.350	8.8900	8.9154	8.9408	8.9662	8.9916	9.0170	9.0424	9.0678	9.0932	9.1186
0.360	9.1440	9.1694	9.1948	9.2202	9.2456	9.2710	9.2964	9.3218	9.3472	9.3726
0.370	9.3980	9.4234	9.4488	9.4742	9.4996	9.5250	9.5504	9.5758	9.6012	9.6266
0.380	9.6520	9.6774	9.7028	9.7282	9.7536	9.7790	9.8044	9.8298	9.8552	9.8806
0.390	9.9060	9.9314	9.9568	9.9822	10.0076	10.0330	10.0584	10.0838	10.1092	10.1346
0.400	10.1600	10.1854	10.2108	10.2362	10.2616	10.2870	10.3124	10.3378	10.3632	10.3886
0.410	10.4140	10.4394	10.4648	10.4902	10.5156	10.5410	10.5664	10.5918	10.6172	10.6426
0.420	10.6680	10.6934	10.7188	10.7442	10.7696	10.7950	10.8204	10.8458	10.8712	10.8966
0.430	10.9220	10.9474	10.9728	10.9982	11.0236	11.0490	11.0744	11.0998	11.1252	11.1506
0.440	11.1760	11.2014	11.2268	11.2522	11.2776	11.3030	11.3284	11.3538	11.3792	11.4046
0.450	11.4300	11.4554	11.4808	11.5062	11.5316	11.5510	11.5824	11.6078	11.6332	11.6586
0.460	11.6840	11.7094	11.7348	11.7602	11.7856	11.8110	11.8364	11.8618	11.8872	11.9126
0.470	11.9380	11.9634	11.9888	12.0142	12.0396	12.0650	12.0904	12.1158	12.1412	12.1666
0.480	12.1920	12.2174	12.2428	12.2682	12.2936	12.3190	12.3444	12.3698	12.3952	12.4206
0.490	12.4460	12.4714	12.4968	12.5222	12.5476	12.5730	12.5984	12.6238	12.6492	12.6746
0.500	12.7000									
Inch	**0**	**0.001**	**0.002**	**0.003**	**0.004**	**0.005**	**0.006**	**0.007**	**0.008**	**0.009**

All specifications subject to change. Consult TE Connectivity for latest specifications.

Conversion Table – Inch/mm (continued)

Inch	0	0.001	0.002	0.003	0.004	0.005	0.006	0.007	0.008	0.009
0.500	12.7000	12.7254	12.7508	12.7762	12.8016	12.8270	12.8524	12.8778	12.9032	12.9286
0.510	12.9540	12.9794	13.0048	13.0302	13.0556	13.0810	13.1064	13.1318	13.1572	13.1826
0.520	13.2080	13.2334	13.2588	13.2842	13.3096	13.3350	13.3604	13.3858	13.4112	13.4366
0.530	13.4620	13.4874	13.5128	15.5382	13.5636	13.5890	13.6144	13.6398	13.6652	13.6906
0.540	13.7160	13.7414	13.7668	13.7922	13.8176	13.8430	13.8684	13.8938	13.9192	13.9446
0.550	13.9700	13.9954	14.0208	14.0462	14.0716	14.0970	14.1224	14.1478	14.1732	14.1986
0.560	14.2240	14.2494	14.2748	14.3002	14.3256	14.3510	14.3764	14.4018	14.4272	14.4526
0.570	14.4780	14.5034	14.5288	14.5542	14.5796	14.6050	14.6304	14.6558	14.6812	14.7066
0.580	14.7320	14.7574	14.7828	14.8082	14.8336	14.8590	14.8844	14.9098	14.9352	14.9606
0.590	14.9860	15.0114	15.0368	15.0622	15.0876	15.1130	15.1384	15.1638	15.1892	15.2146
0.600	15.2400	15.2654	15.2908	15.3162	15.3416	15.3670	15.3924	15.4178	15.4432	15.4686
0.610	15.4940	15.5194	15.5448	15.5702	15.5956	15.6210	15.6464	15.6718	15.6972	15.7226
0.620	15.7480	15.7734	15.7988	15.8242	15.8496	15.8750	15.9004	15.9258	15.9512	15.9766
0.630	16.0020	16.0274	16.0528	16.0782	16.1036	16.1290	16.1544	16.1798	16.2052	16.2306
0.640	16.2560	16.2814	16.3068	16.3322	16.3576	16.3830	16.4084	16.4338	16.4592	16.4846
0.650	16.5100	16.5354	16.5608	16.5862	16.6116	16.6370	16.6624	16.6878	16.7132	16.7386
0.660	16.7640	16.7894	16.8148	16.8402	16.8656	16.8910	16.9164	16.9418	16.9672	16.9926
0.670	17.0180	17.0434	17.0688	17.0942	17.1196	17.1450	17.1704	17.1958	17.2212	17.2466
0.680	17.2720	17.2974	17.3228	17.3482	17.3736	17.3990	17.4244	17.4498	17.4752	17.5006
0.690	17.5260	17.5514	17.5768	17.6022	17.6276	17.6530	17.6784	17.7038	17.7292	17.7546
0.700	17.7800	17.8054	17.8308	17.8562	17.8816	17.9070	17.9324	17.9528	17.9832	18.0086
0.710	18.0340	18.0594	18.0848	18.1102	18.1356	18.1610	18.1864	18.2118	18.2372	18.2626
0.720	18.2880	18.3134	18.3388	18.3642	18.3896	18.4150	18.4404	18.4658	18.4912	19.5166
0.730	18.5420	18.5674	18.5928	18.6182	18.6436	18.6690	18.6944	18.7198	18.7452	18.7706
0.740	18.7960	18.8214	18.8468	18.8722	18.8976	18.9230	18.9484	18.9738	18.9992	19.0246
0.750	19.0500	19.0754	19.1008	19.1262	19.1516	19.1170	19.2024	19.2278	19.2532	19.2786
0.760	19.3040	19.3294	19.3548	19.3802	19.4056	19.4310	19.4564	19.4818	19.5072	19.5326
0.770	19.5580	19.5834	19.6088	19.6342	19.6596	19.6850	19.7104	19.7358	19.7612	19.7886
0.780	19.8120	19.8374	19.8628	19.8882	19.9136	19.9390	19.9644	19.9898	20.0152	20.0406
0.790	20.0660	20.0914	20.1168	20.1422	20.1676	20.1930	20.2184	20.2438	20.2692	20.2946
0.800	20.3200	20.3454	20.3708	20.3962	20.4216	20.4470	20.4724	20.4978	20.5232	20.5486
0.810	20.5740	20.5994	20.6248	20.6502	20.6756	20.7010	20.7264	20.7518	20.7772	20.8026
0.820	20.8280	20.8534	20.8788	20.9042	20.9296	20.9550	20.9804	21.0058	21.0312	21.0566
0.830	21.0820	21.1074	21.1328	21.1582	21.1836	21.2090	21.2344	21.2598	21.2852	21.3106
0.840	21.3360	21.3614	21.3868	21.4122	21.4376	21.4630	21.4884	21.5138	21.5392	21.5646
0.850	21.5900	21.6154	21.6408	21.6662	21.6916	21.7170	21.7424	21.7678	21.7932	21.8186
0.860	21.8440	21.8694	21.8948	21.9202	21.9456	21.9710	21.9964	22.0218	22.0472	22.0726
0.870	22.0980	22.1234	22.1488	22.1742	22.1996	22.2250	22.2504	22.2758	22.3012	22.3266
0.880	22.3520	22.3774	22.4028	22.4282	22.4536	22.4790	22.5044	22.5298	22.5552	22.5806
0.890	22.6060	22.6314	22.6568	22.6822	22.7076	22.7330	22.7584	22.7838	22.8092	22.8346
0.900	22.8600	22.8854	22.9108	22.9362	22.9616	22.9870	23.0124	23.0378	23.0632	23.0886
0.910	23.1140	23.1394	23.1648	23.1902	23.2156	23.2410	23.2664	23.2918	23.3172	23.3426
0.920	23.3680	23.3934	23.4188	23.4442	23.4696	23.4950	23.5204	23.5458	23.5712	23.5966
0.930	23.6220	23.6474	23.6728	23.6982	23.7236	23.7490	23.7744	23.7998	23.8252	23.8506
0.940	23.8760	23.9014	23.9268	23.9522	23.9776	24.0030	24.0284	24.0538	24.0792	24.1046
0.950	24.1300	24.1554	24.1808	24.2062	24.2316	24.2570	24.2824	24.3078	24.3332	24.3586
0.960	24.3840	24.4094	24.4348	24.4602	24.4856	24.5110	24.5364	24.5618	24.5812	24.6126
0.970	24.6380	24.6634	24.6888	24.7142	24.7396	24.7650	24.7904	24.8158	24.8412	24.8666
0.980	24.8920	24.9174	24.9428	24.9682	24.9936	25.0190	25.0444	25.0698	25.0952	25.1206
0.990	25.1460	25.1714	25.1968	25.2222	25.2476	25.2730	25.2984	25.3228	25.3492	25.3746
1.000	25.4000									
Inch	**0**	**0.001**	**0.002**	**0.003**	**0.004**	**0.005**	**0.006**	**0.007**	**0.008**	**0.009**

	Page
MQS Interconnection	
Introduction	1-1
Contact Systems	
Introduction	1-3
NanoMQS	
Receptacle Contacts	1-4
MQS	
Receptacle Contacts	1-5–1-9
Pin Contacts	1-10
Single Wire Seals and Sealing Plugs	1-11
MQS 1.5 mm	
Introduction	1-13
Receptacle Contacts	1-14
Pin Contacts	1-15
Single Wire Seals and Sealing Plugs	1-16
Micro Power Quadlok	
Introduction	1-17
Receptacle Contacts	1-18
Pin Contacts	1-19
Single Wire Seals and Sealing Plugs	1-20
Power Quadlok	
Receptacle Contacts	1-21
Pin Contacts	1-22
Single Wire Seals and Sealing Plugs	1-23

Powertrain
Systems

Safety & Security
Systems

Convenience

Driver
Information

Body & Chassis
Systems

✓	✓	✓	✓	✓
✓	✓	✓	✓	✓
✓	✓	✓	✓	✓
✓	✓	✓	✓	✓
✓	✓	✓	✓	✓
✓	✓	✓	✓	✓
✓	✓	✓	✓	✓
✓	✓	✓	✓	✓
✓	✓	✓	✓	✓
✓	✓	✓	✓	✓
✓	✓	✓	✓	✓
✓	✓	✓	✓	✓
✓	✓	✓	✓	✓
✓	✓	✓	✓	✓
✓	✓	✓	✓	✓
✓	✓	✓	✓	✓
✓	✓	✓	✓	✓

	Receptacle Housings	Pin Housings	Printed Circuit Board Headers
MQS Interconnection			
Introduction		2-1	
NanoMQS Top Latch Unsealed			
8 Positions Vertical / Right Angle	2-10	–	2-2 / 2-6
12 Positions Vertical / Right Angle	2-11	–	2-3 / 2-7
20 Positions Vertical / Right Angle	2-12	–	2-4 / 2-8
32 Positions Vertical / Right Angle	2-13	–	2-5 / 2-9
Unsealed MQS Housings			
2 Positions	3-2	3-3 – 3-4	–
3 Positions	3-5 – 3-8	3-9 – 3-10	3-11 – 3-15
4 Positions	3-16 – 3-20	3-21 – 3-24	3-25 – 3-28
5 Positions	3-29 – 3-30	3-31	–
6 Positions	3-32 – 3-39	3-40 – 3-43	3-44 – 3-53
8 Positions	3-54 – 3-57	3-58 – 3-59	3-60 – 3-62
9 Positions	–	3-63	–
10 Positions	3-64 – 3-67	–	3-68
12 Positions	4-1 – 4-6	4-7 / 4-14 /	4-8–4-13/4-15–4-20
14 Positions	4-21	4-22	–
16 Positions	4-23 – 4-24	4-25	4-26 – 4-28
18 Positions	4-29 – 4-32	4-33	4-34 – 4-46
20 Positions	4-47	4-48 – 4-50	4-51 – 4-52
22 Positions	5-1	–	–
24 Positions	5-2 – 5-4	–	5-5
26 Positions	5-6 – 5-10	5-11	5-12 – 5-17
28 Positions	5-18	–	5-19 – 5-20
30 Positions	–	–	5-19 – 5-20
32 Positions	5-21 – 5-26	–	5-27 – 5-32
34 Positions	5-33	–	–
36 Positions	5-34	–	5-35 – 5-37
40 Positions	5-38 – 5-39	–	5-40 – 5-43
42 Positions	5-44	–	–
48 Positions	–	–	5-45
50 Positions	5-48	–	–

Powertrain
Systems

Safety & Security
Systems

Convenience

Driver
Information

Body & Chassis
Systems

✓	✓	✓	✓	✓
✓	✓	✓	✓	✓
✓	✓	✓	✓	✓
✓	✓	✓	✓	✓
✓	✓	✓	✓	✓
✓	✓	✓	✓	✓
✓	✓	✓	✓	✓
✓	✓	✓	✓	✓
✓	✓	✓	✓	✓
✓	✓	✓	✓	✓
✓	✓	✓	✓	✓
✓	✓	✓	✓	✓
✓	✓	✓	✓	✓
✓	✓	✓	✓	✓
✓	✓	✓	✓	✓
✓	✓	✓	✓	✓
✓	✓	✓	✓	✓
✓	✓	✓	✓	✓
✓	✓	✓	✓	✓
✓	✓	✓	✓	✓
✓	✓	✓	✓	✓
✓	✓	✓	✓	✓
✓	✓	✓	✓	✓
✓	✓	✓	✓	✓
✓	✓	✓	✓	✓
✓	✓	✓	✓	✓
✓	✓	✓	✓	✓
✓	✓	✓	✓	✓
✓	✓	✓	✓	✓
✓	✓	✓	✓	✓
✓	✓	✓	✓	✓
✓	✓	✓	✓	✓

	Receptacle Housings	Pin Housings	Printed Circuit Board Headers
MQS Interconnection			
Unsealed MQS Housings (continued)			
52 Positions	5-47	–	5-48
56 Positions	–	–	5-49 – 5-50
75 Positions	5-51	–	5-52
94 Positions	–	–	5-53
115 Positions	–	–	5-54
121 Positions	5-55	–	5-56
NanoMQS Sealed Housings			
2 Positions	6-1	–	–
4 Positions	6-2	–	–
2–6 Positions	6-3	–	–
8 Positions	6-4	–	–
Sealed MQS Housings			
2 Positions	6-5 – 6-8	6-9	–
3 Positions	6-10 – 6-13	–	–
4 Positions	6-14 – 6-15	6-16 – 6-17	6-18 – 6-19
6 Positions	6-20 – 6-21	6-22	–
8 Positions	6-23	–	–
30 Positions	7-1	–	–
40 Positions	7-2 – 7-7	–	–
60 Positions	7-5 – 7-7	–	–
64 Positions	7-8 – 7-9	–	–
81 Positions	7-10 – 7-13	–	–
94 Positions	7-14 – 7-15	–	–
Application and Tooling 8-1 – 8-36			
Numerical Index 9-1 – 9–7			
Disclaimer and Trademarks 10-1			

Powertrain
Systems

Safety & Security
Systems

Convenience

Driver
Information

Body & Chassis
Systems

✓	✓	✓	✓	✓
✓	✓	✓	✓	✓
✓	✓	✓	✓	✓
✓	✓	✓	✓	✓
✓	✓	✓	✓	✓
✓	✓	✓	✓	✓
✓	✓	✓	✓	✓
✓	✓	✓	✓	✓
✓	✓	✓	✓	✓
✓	✓	✓	✓	✓
✓	✓	✓	✓	✓
✓	✓	✓	✓	✓
✓	✓	✓	✓	✓
✓	✓	✓	✓	✓
✓	✓	✓	✓	✓
✓	✓	✓	✓	✓
✓	✓	✓	✓	✓
✓	✓	✓	✓	✓
✓	✓	✓	✓	✓
✓	✓	✓	✓	✓
✓	✓	✓	✓	✓
✓	✓	✓	✓	✓

Engineering Notes

All specifications subject to change. Consult TE Connectivity for latest specifications.

MQS Interconnection offers high packing density, robust construction and highest functional requirements.

Product Description

The MQS interconnection combines the features of high packing density, robust construction and high functional requirements.

In spite of its miniaturized design, it fulfills all requirements for a contact system suitable for use in automobiles and covers a wide range of application sectors in both waterproof and non-waterproof areas.

The electrical contact is made by a square pin with an edge length of 0.63 mm. The receptacle contact has four contact points and the electrical contact is made with all four surfaces of the pin.

The special feature of the MQS contact is the separation of the main functions; the internal contact body provides all electrical and electro-mechanical functions, while the superimposed steel cantilever spring protects and retains the contact.

Application

The MQS contact is designed for electronic and electrical applications in motor vehicles, where vibration and mechanical stress can, in the long-term, affect the quality of conventional contact systems.

Engineering Notes

All specifications subject to change. Consult TE Connectivity for latest specifications.

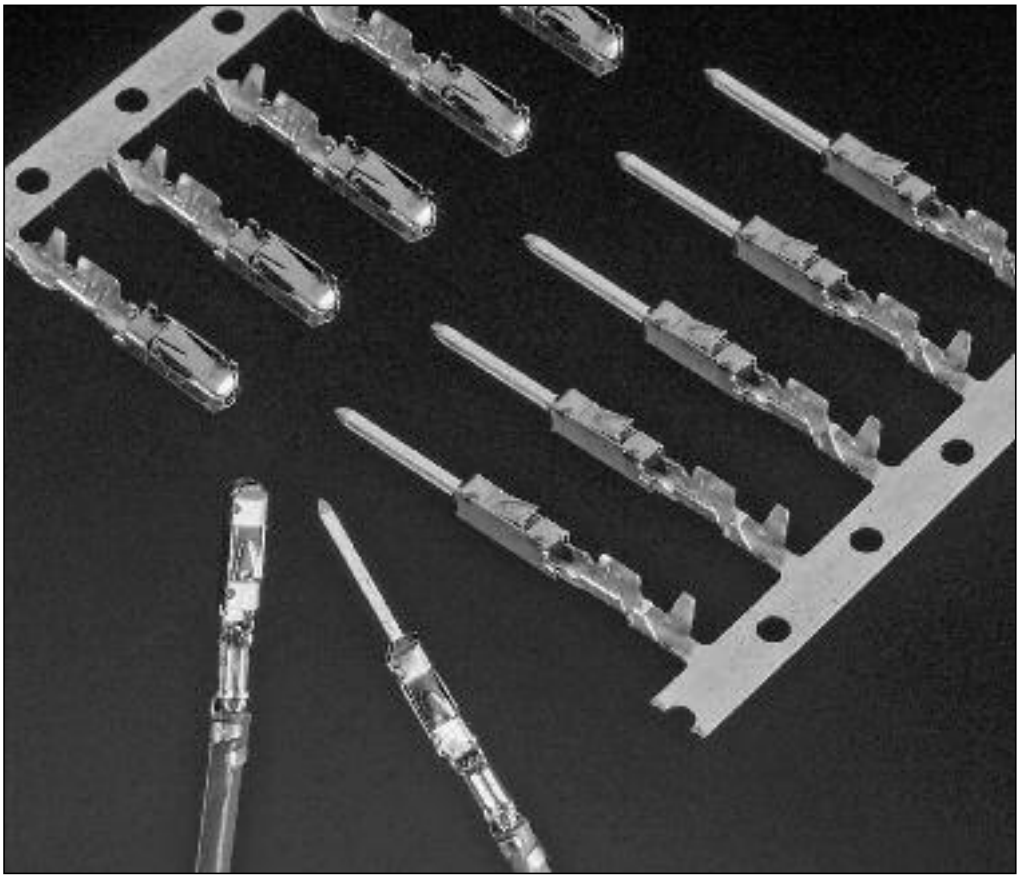

With the design of the MQS interconnection in the centerline 2.54 mm, we developed a new automobile suitable contact system. The positive features of existing contact systems – high packing density and at the same time high load of current carrying capacity, robust design and safe handling – were consistently implemented. Consequently, the receptacle contact and pin contact are able to be inserted safely into the contact cavity and latch in with a clear click.

The receptacle contacts with four contact points on a 0.63 x 0.63 mm pin contact and reaches at this point a max. load of current carrying capacity of up to 7.5 A at 80 °C.

Based on the plug uniform base centerline of 2.54 mm, the MQS interconnection ranges from MQS and Micro Power Quadlok to Power Quadlok which can be subjected to more stress. With the whole number multiplication of the centerline from 2.54 mm, the circuit board designer achieves a high level of freedom on designing the layout.

Receptacle Contacts

Technical Features

Contact Material:
CuNiSi/CuSn

Surface Contact Area:
Tin plated: 0.8–2.2 µm Sn
Silver plated: 1.8–5 µm Ag

Wire Size Range:
0.13–0.35 mm^2

Current Carrying Capacity:
Up to 3 A at 90 °C

Temperature Range:
–40 °C ... +105 °C (tin plated)
–40 °C ... +170 °C (silver plated)

Cycles:
20 tin plated
50 silver plated

Application Specification:
114-18858

Product Specification:
108-94099

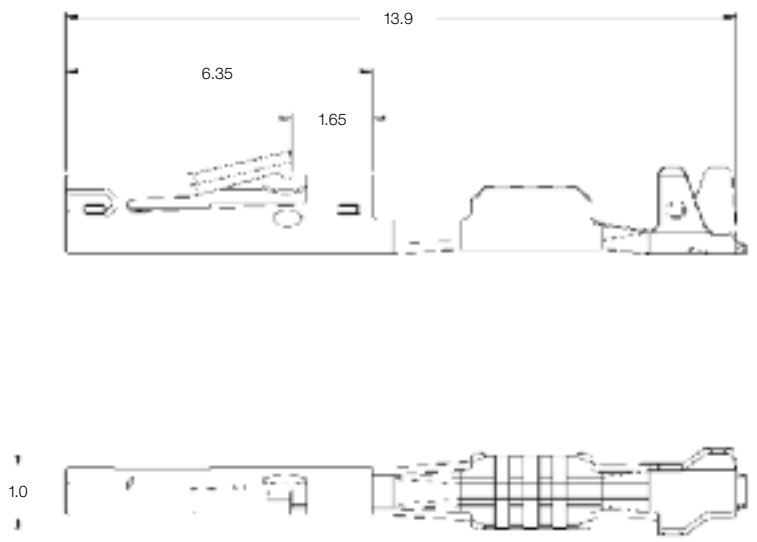

Receptacle Contacts

Wire Size Range (mm^2)	Insulation Diameter (mm)	Material and Finish	Part Numbers: Strip Form	Package Quantity	Loose-Piece	Package Quantity	Applicator	Hand Tool with Die Set
0.13-0.22	max 1.2	CuNiSi, silver plated	1-1703930-2	–	1-2112449-2	–	–	1976156-1
		CuSn, tin plated	1-1703930-1	–	1-2112449-1	–		
0.35	max 1.4	CuNiSi, silver plated	2-1703930-2	–	2-2112449-2	–	See Application Specification	1976157-1
		CuSn, tin plated	2-1703930-1	–	2-2112449-1	–		

All specifications subject to change. Consult TE Connectivity for latest specifications.

Receptacle Contacts

Technical Features

Material
Contact: CuNiSi
Pin Contact: Copper-Alloy
Cantilever Spring: Stainless Steel

Contact Finish:
Pre-tin plated, silver plated, gold plated

Conductor Binding:
Crimp Technology/FFC

Wire Size Range:
0.08–0.75 mm² Single Wires (FLR)/AWG 18–22

Current Carrying Capacity:
Up to 7.5 A at 80 °C

Temperature Range:
–40 °C ... +120 °C (tin plated)
–40 °C ... +130 °C (silver plated)
–40 °C ... +140 °C (gold plated)

Centerline:
2.54 x 2.54 mm Standard
4.0 x 4.0 mm SWS Standard
4.0 x 3.5 mm SWS Staggered

Mating Cycles:
20 tin plated
20 silver plated
100 gold plated

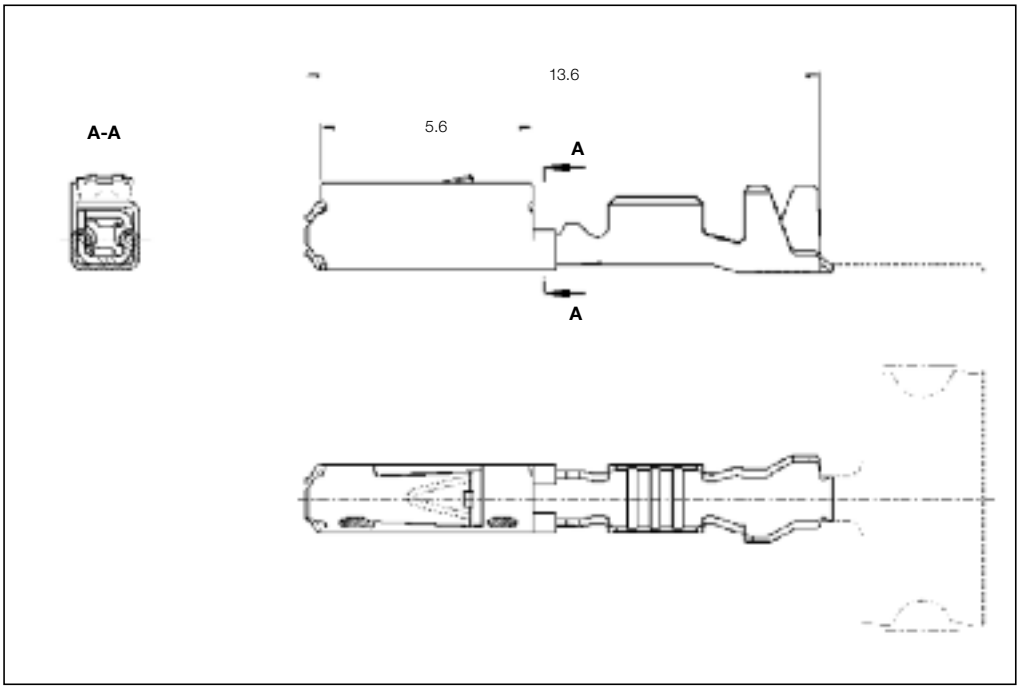

Special Applications:
Inmoldable Pin Contact, Receptacle Contact, Receptacle Contact with Short Circuit Area

Table Drawings:
929454 (Receptacle Contact)
929453 (Pin Contact)

Application Specification:
114-18021 Standard
114-18025 SWS System

Product Specification:
108-18030

Extraction Tools:
Part No. **6-1579007-0** Clean Body
Part No. **6-1579007-1** Standard

Standard Receptacle Contacts

Wire Size Range (mm²)	Insulation Diameter		Material and Finish	Part Numbers				
	FLK (mm)	FLR (mm)		Strip Form	Package Quantity	Applicator	Hand Tool	Die Set
0.14–0.22	–	0.9–1.2	pre-tin plated	1355717-1	13,000	2151265	539635-1	5-1578001-2
			gold plated	1355717-5	13,000			
0.25–0.35	–	0.9–1.6	pre-tin plated	5-928999-1	13,000	2151493	539635-1	539682-2
			gold plated	5-928999-5	13,000			
			silver plated	5-928999-6	13,000			
0.50–0.75	–	1.4–1.9	pre-tin plated	5-963715-1	10,000	2151491	539635-1	3-1579001-5
			gold plated	5-963715-5	10,000			
			silver plated	5-963715-6	10,000			

Single Wire Sealing System

Wire Size Range (mm²)	Insulation Diameter		Material and Finish	Part Numbers				
	FLK (mm)	FLR (mm)		Strip Form	Package Quantity	Applicator	Hand Tool	Die Set
0.25–0.35	–	0.9–1.6	pre-tin plated	5-962885-1	9,000	2151104	539635-1	539685-2
			gold plated	5-962885-5	9,000			
			silver plated	5-962885-6	9,000			
0.50–0.75	–	1.4–1.9	pre-tin plated	5-965906-1	9,000	2151038	539635-1	5-1579001-1
			gold plated	5-965906-5	9,000			
			silver plated	5-965906-6	9,000			

Receptacle Contacts (continued)

MQS Flexible Flat Cable (FFC) Receptacle Contacts

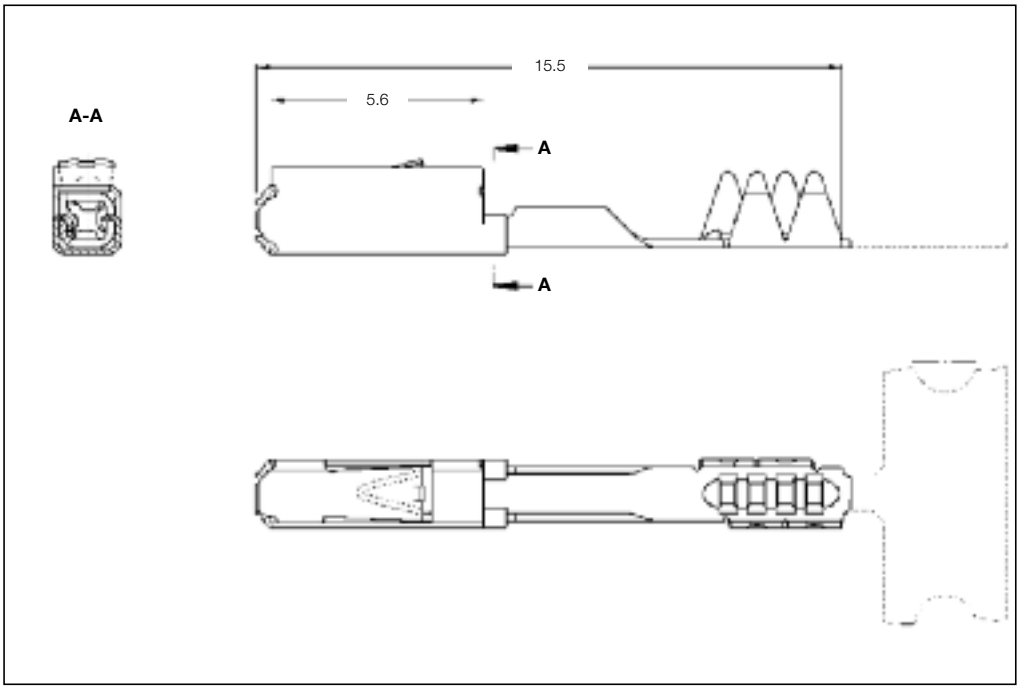

MQS Flexible Flat Cable (FFC) Receptacle Contacts

Wire Size Range (mm^2)	Insulation Diameter		Material and Finish	Part Numbers			
	FLK (mm)	FLR (mm)		Strip Form	Package Quantity	Applicator	Hand Tool with Die Set
–	–	–	pre-tin plated	929387-1	12,500	–	1579001-4
–	–	–	pre-tin plated	968987-1 **	14,000		

*) Depending on Foil
**) Special Application: Short Components

Insertion and Extraction Tools are available upon request.
They depend on the number of positions and the housing version.

All specifications subject to change. Consult TE Connectivity for latest specifications.

Receptacle Contacts (continued)

MQS Clean Body Receptacle Contacts

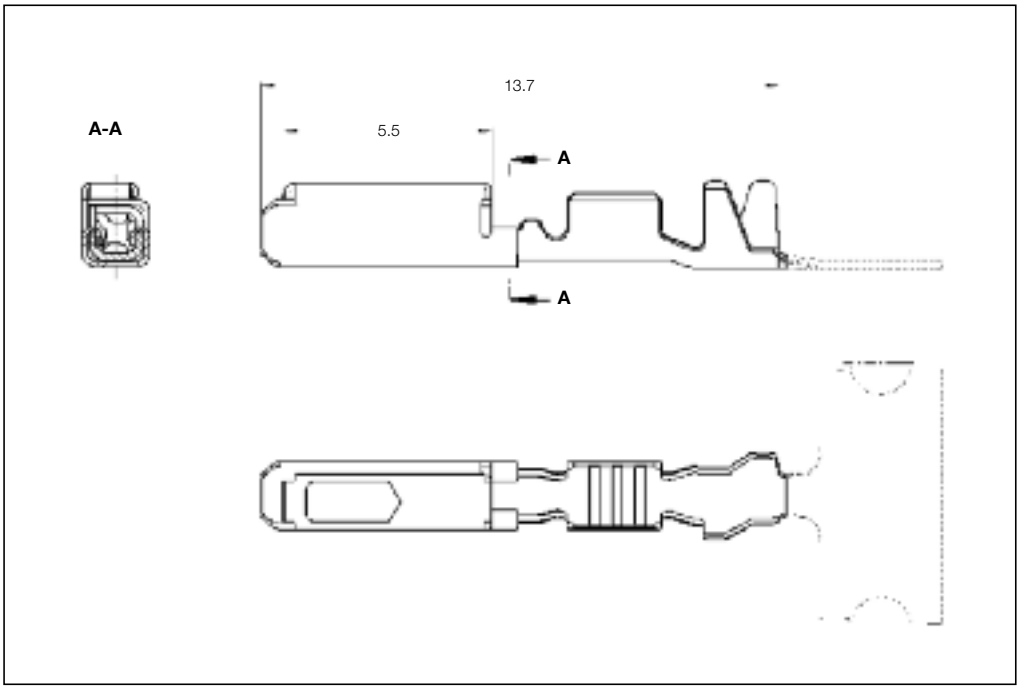

MQS Clean Body Receptacle Contacts

Wire Size Range (mm^2)	Insulation Diameter		Material and Finish	Part Numbers				
	FLK (mm)	FLR (mm)		Strip Form	Package Quantity	Applicator	Hand Tool	Die Set
0.20–0.35	–	0.9–1.6	pre-tin plated	5-968220-1	12,000	2151493	539635-1	539682-2
			gold plated	5-968220-5	12,000			
			silver plated	968220-6	12,000			
0.50–0.75	–	1.4–1.9	pre-tin plated	5-968221-1	10,000	2151491	539635-1	3-1579001-5
			gold plated	5-968221-5	10,000			
			silver plated	968221-6	10,000			

1

MQS Clean Body Receptacle Contacts

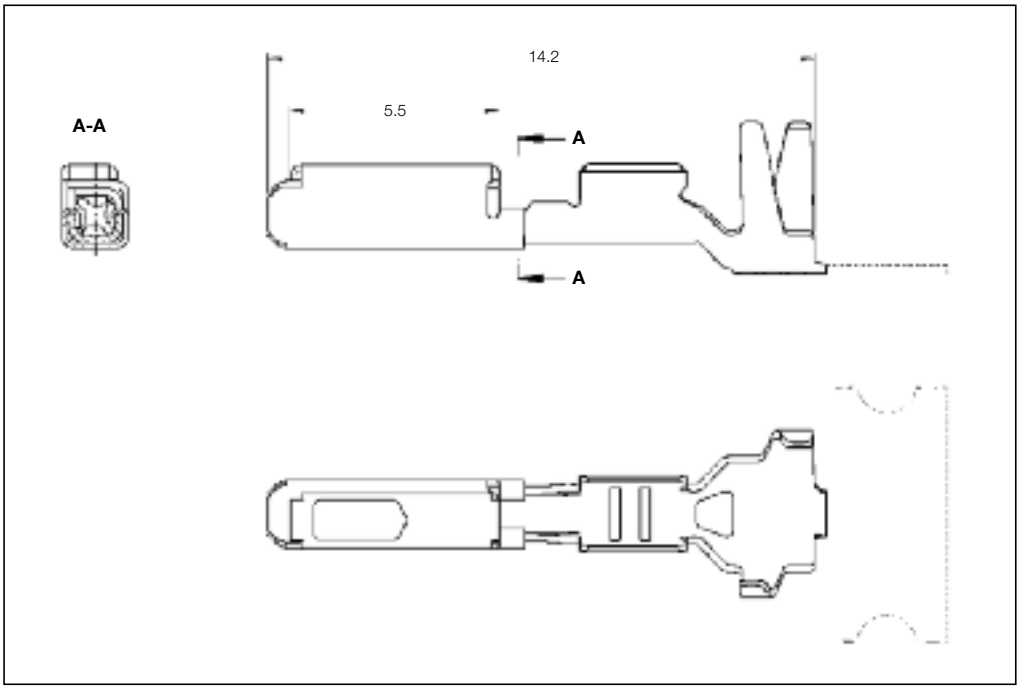

MQS Clean Body Receptacle Contacts with Single Wire Sealing System

Wire Size Range		Insulation Diameter (mm)	Material and Finish	Part Numbers			
(mm²)	(AWG)			Strip Form	Package Quantity	Applicator	Hand Tool
0.50–0.75	–	1.4–2.0	pre-tin plated	1703032-1	8,500	on request	–
			gold plated	1703032-5	8,500		

MQS Clean Body Receptacle Contacts for AWG

Wire Size Range		Insulation Diameter (mm)	Material and Finish	Part Numbers			
(mm²)	(AWG)			Strip Form	Package Quantity	Applicator	Hand Tool
0.79–1.00	18	1.4–2.0	pre-tin plated	1719532-1	10,000	–	2151775
			gold plated	1719532-5	10,000		
0.32–0.52	20 + 22	1.50–1.85	pre-tin plated	1719545-1	10,000	–	2151776
			gold plated	1719545-5	10,000		

All specifications subject to change. Consult TE Connectivity for latest specifications.

Receptacle Contacts (continued)

MQS Clean Body Receptacle Contacts with Short Circuit Area

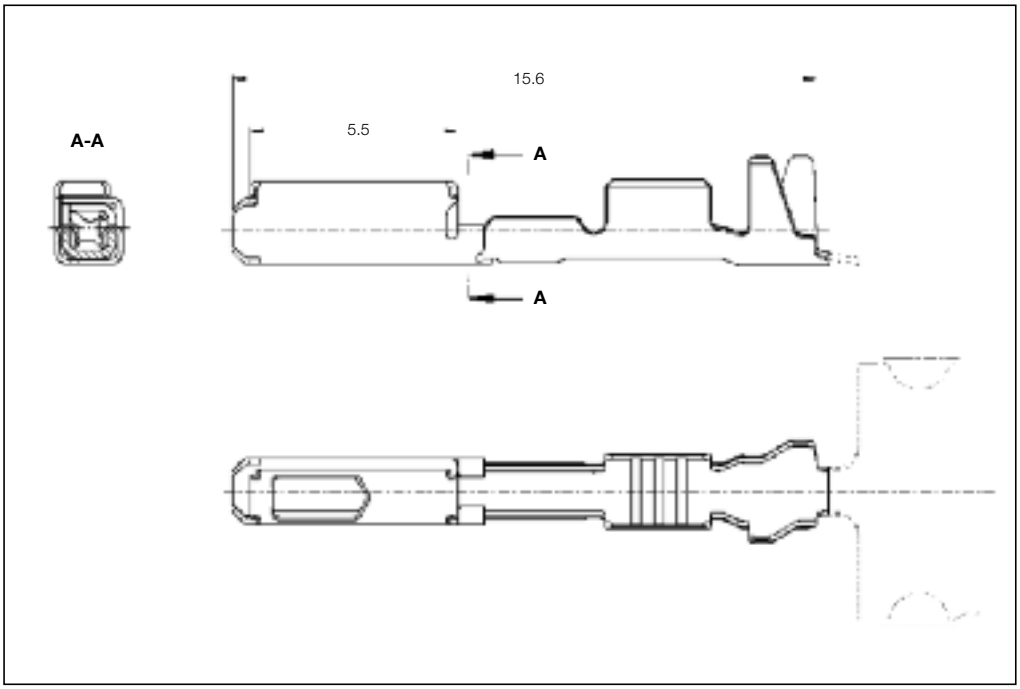

MQS Clean Body Receptacle Contacts with Short Circuit Area

Wire Size Range (mm^2)	Insulation Diameter		Material and Finish	Part Numbers				
	FLK (mm)	FLR (mm)		Strip Form	Package Quantity	Applicator	Hand Tool	Die Set
0.20–0.35	–	0.9–1.6	gold plated	5-1241918-1	13,000	2151493	539635-1	539682-2
0.50–0.75	–	1.4–1.9	gold plated	5-1241920-1	10,000	2151491		

1

Pin 0.63 x 0.63 mm, Mates with MQS

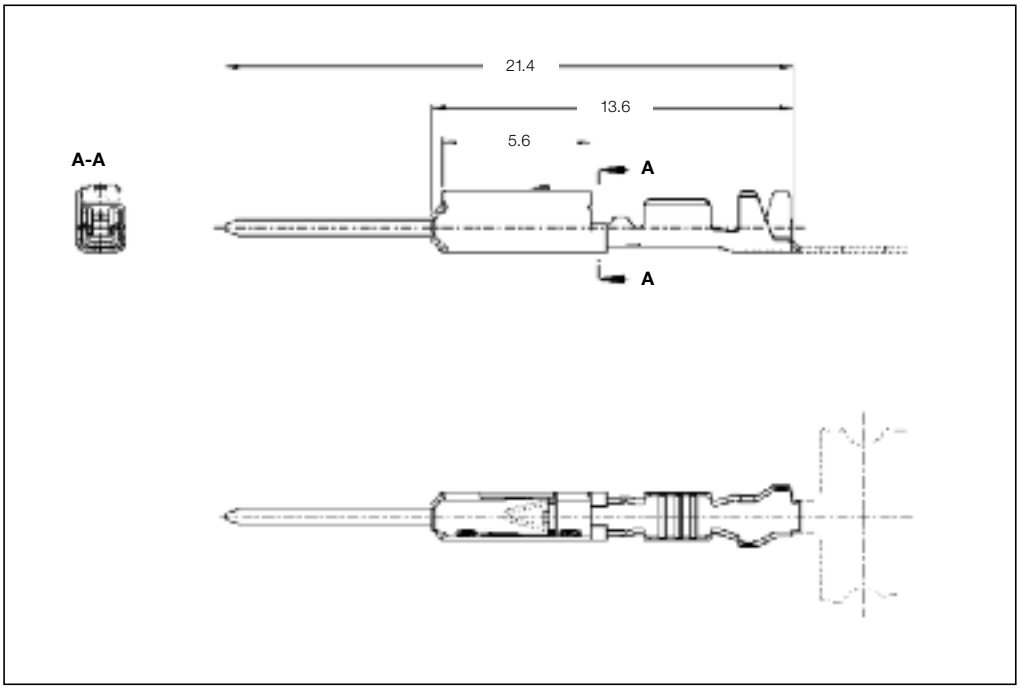

Standard Pin Contacts

Wire Size Range (mm^2)	Insulation Diameter		Material and Finish	Part Numbers				
	FLK (mm)	FLR (mm)		Strip Form	Package Quantity	Applicator	Hand Tool	Die Set
0.14–0.22	–	0.9–1.2	pre-tin plated	1355719-1	13,000	2151265	539635-1	5-1579001-2
			gold plated	1355719-2	13,000			
0.25–0.35	–	0.9–1.6	pre-tin plated	6-928918-1	13,000	2151493	539635-1	539682-2
			gold plated	6-928918-2	13,000			
0.50–0.75	–	1.6–1.9	pre-tin plated	5-963716-1	10,000	2151491	–	–
			gold plated	5-963716-2	10,000			

Single Wire Sealing System

Wire Size Range (mm^2)	Insulation Diameter		Material and Finish	Part Numbers				
	FLK (mm)	FLR (mm)		Strip Form	Package Quantity	Applicator	Hand Tool	Die Set
0.25–0.35	–	0.9–1.6	pre-tin plated	5-962886-1	10,000	2151104	539635-1	539685-2
			gold plated	5-962886-2	10,000			
0.50–0.75	–	1.6–1.9	pre-tin plated	5-965908-1	10,000	2151038	539635-1	5-1579001-1
			gold plated	5-965908-2	10,000			

MQS Flexible Flat Cable (FFC) Pin Contacts

Wire Size Range (mm^2)	Insulation Diameter		Material and Finish	Part Numbers			
	FLK (mm)	FLR (mm)		Strip Form	Package Quantity	Applicator	Hand Tool
–	–	–	pre-tin plated	1452128-1	13,000	–	**

) Part No. **2-1579004-9 Copper 35–100 µm, Foil 130–260 µm
Part No. **3-1579004-0** Copper 100–200 µm, Foil 270–380 µm

All specifications subject to change. Consult TE Connectivity for latest specifications.

Single Wire Seals and Sealing Plugs for MQS

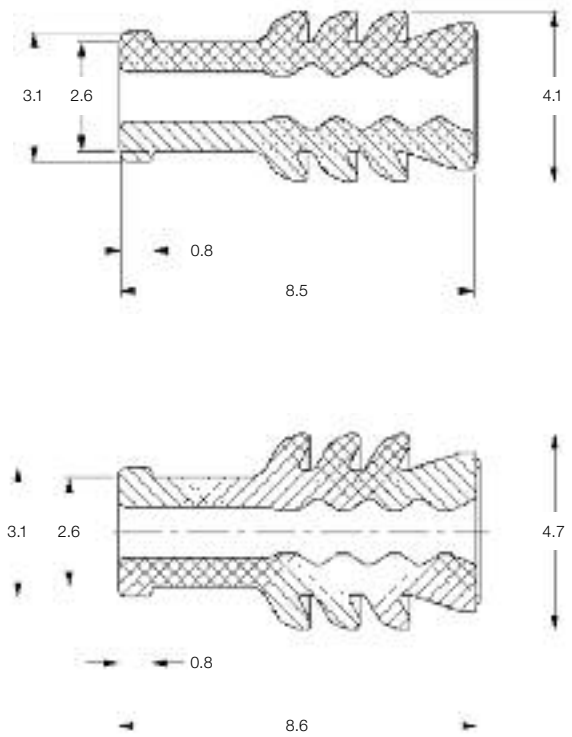

Cavity Diameter 3.45 mm

Insulation Diameter		Color	Part Number	Package Quantity
FLK (mm)	FLR (mm)			
–	0.9–1.3	Yellow	967067-2	20,000
–	1.4–1.9	Green	967067-1	20,000
Sealing Plug		Blue	967056-1	5,000

Cavity Diameter 4.0 mm

Insulation Diameter		Color	Part Number	Package Quantity
FLK (mm)	FLR (mm)			
–	0.9–1.3	Gray	963142-2	20,000
–	1.4–1.9	Black	963142-1	20,000
Sealing Plug		White	963143-1	20,000

Engineering Notes

All specifications subject to change. Consult TE Connectivity for latest specifications.

Technical Features

Material
Contact: CuNiSi
Pin Contact: Copper-Alloy
Cantilever Spring: Stainless Steel

Contact Finish:
Tin plated

Conductor Binding:
Crimp Technology

Wire Size Range:
0.35 mm^2 up to 0.5 mm^2
0.75 mm^2 up to 1.5 mm^2

Current Carrying Capacity:
Up to 10 A at 80 °C

Temperature Range:
–40 °C ... +120 °C (tin plated)

Centerline:
- 3.5 x 2.54 mm (unsealed)
- 4.0 x 4.0 mm (wire size equal or less than 0.75 mm^2, sealed)
- 4.5 x 4.5 mm (wire size 1.0–1.5 mm^2, sealed)

Mating Cycles:
20 tin plated

Special Applications:
Receptacle Contact
Clean Body

Extraction Tool:
Part No. **6-1579007-2**

Table Drawings:
1241611
1241612 (Clean Body)
1452079

Product Specification:
108-18030

Application Specification:
114-18286

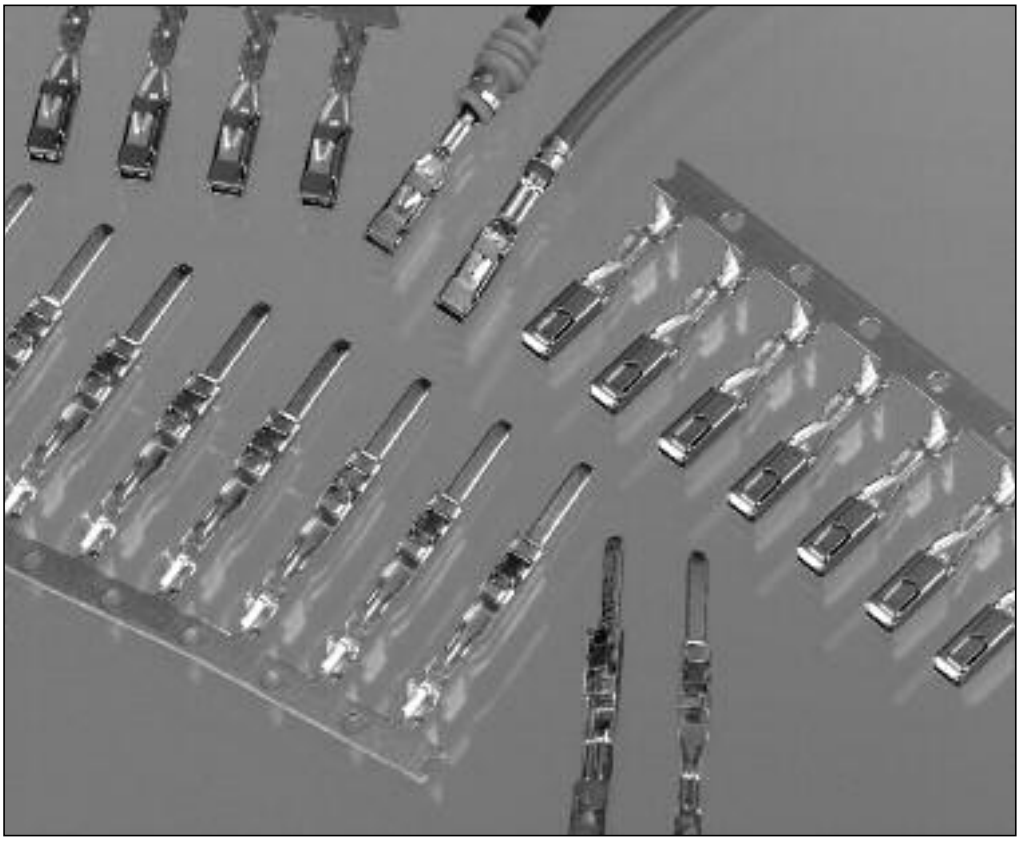

Product Description

Next to the well known MQS contact, we offer an additional MQS 1.5 mm contact. Available as male and female receptacle. The new terminal absolutely supplements the product range. All the advantages are designed in.

It is suitable for sealed and unsealed applications. Single wire sealing or the clean body version can give you high ability on the connector design.

In combination with the MQS, Micro Power Quadlok and Power Quadlok you have the benefit to have the secondary locking on a common level.

Mounting and dismountig of the terminals still ensures the retention function. On the pin header side you can use a pin with higher rigidity.

With the two piece design electrical and mechanical functions are separated. Polarization and the two independent lockings bring together a safe and easy handling at the harness maker.

The normal contact force achieves without assisting cantilever spring. Four independent contact points assure a perfect current carry which you can use to contact stamped lead frames.

1

Receptacle 1.5 x 0.63 mm, Mates with MQS 1.5

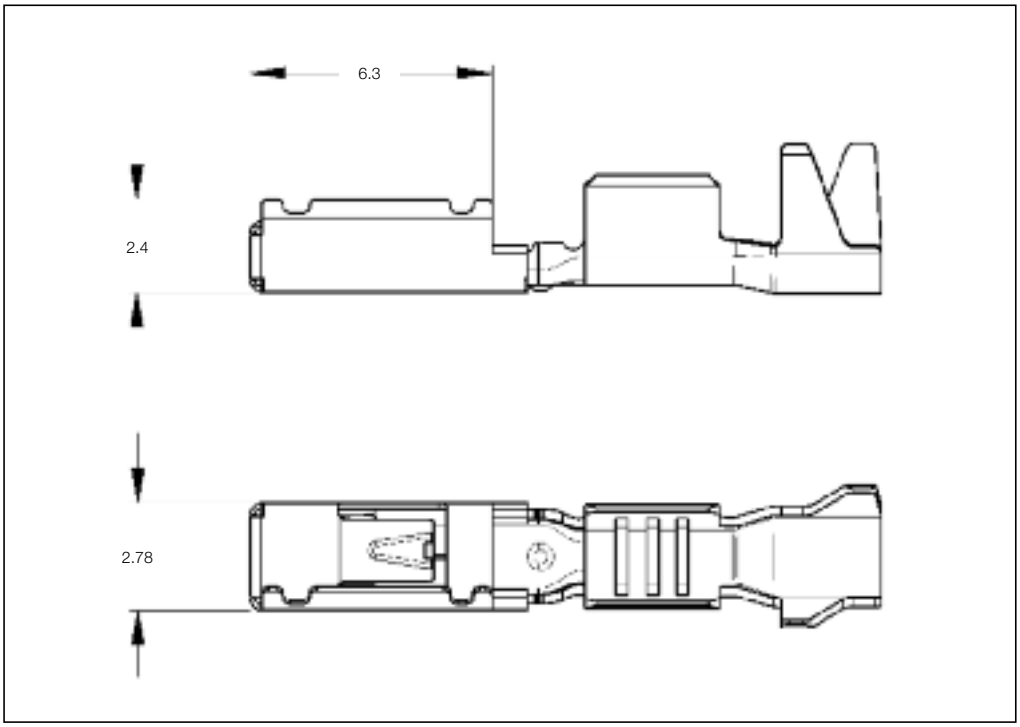

Standard Receptacle Contacts

Wire Size Range (mm^2)	Insulation Diameter		Material and Finish	Part Numbers				
	FLK (mm)	FLR (mm)		Strip Form	Package Quantity	Applicator	Hand Tool	Die Set
0.35–0.50	–	1.1–1.6	tin plated	1355556-1	11,000	2151252	539635-1	539692-2
0.75–1.50	–	1.7–2.4	tin plated	1355553-1	8,500	2151066		

Single Wire Sealing System

Wire Size Range (mm^2)	Insulation Diameter		Material and Finish	Part Numbers				
	FLK (mm)	FLR (mm)		Strip Form	Package Quantity	Applicator	Hand Tool	Die Set
0.35–0.50	–	1.1–1.6	tin plated	1241603-1	8,500	2151035	539635-1	539693-2
0.75–1.50	–	1.7–2.4	tin plated	1241605-1	8,500	2151575		

Clean Body

Wire Size Range (mm^2)	Insulation Diameter		Material and Finish	Part Numbers				
	FLK (mm)	FLR (mm)		Strip Form	Package Quantity	Applicator	Hand Tool	Die Set
0.35–0.50	–	1.1–1.6	tin plated	1452158-1	12,000	2151252	539635-1	539692-2
0.75–1.50	–	1.7–2.4	tin plated	1241608-1	8,500	2151066		

All specifications subject to change. Consult TE Connectivity for latest specifications.

Pin 1.5 x 0.63 mm, Mates with MQS 1.5

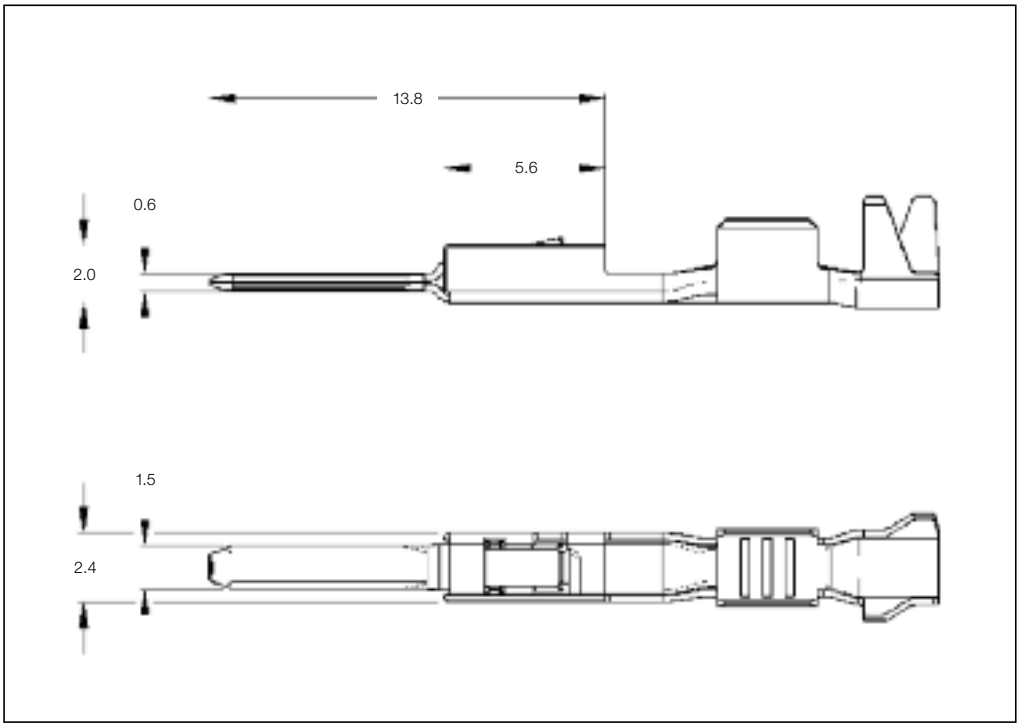

Standard Pin Contacts

Wire Size Range (mm^2)	Insulation Diameter		Material and Finish	Part Numbers				
	FLK (mm)	FLR (mm)		Strip Form	Package Quantity	Applicator	Hand Tool	Die Set
0.35–0.50	–	1.1–1.6	tin plated	1-1452350-1	13,000	2151252	339635-1	539692-2
0.75–1.50	–	1.7–2.4	tin plated	1-1452058-1	8,000	2151066		

1

Single Wire Seals and Sealing Plugs for MQS 1.5

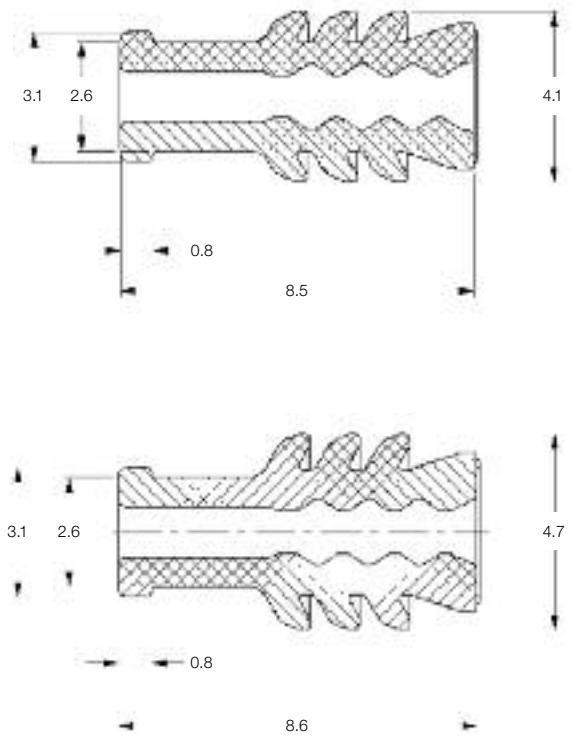

Cavity Diameter 3.6 mm

Insulation Diameter		Color	Part Number	Package Quantity
FLK (mm)	FLR (mm)			
–	1.1–1.3	Yellow	967067-2	20,000
–	1.4–1.9	Green	967067-1	20,000
Sealing Plug		Blue	967056-1	5,000

Cavity Diameter 4.0 mm

Insulation Diameter		Color	Part Number	Package Quantity
FLK (mm)	FLR (mm)			
–	1.1–1.3	Gray	963142-2	20,000
–	1.4–1.9	Black	963142-1	20,000
–	1.9–2.4	Black	963142-1	20,000
Sealing Plug		White	963143-1	20,000

All specifications subject to change. Consult TE Connectivity for latest specifications.

The contact system is designed for electronic and electrical applications in motor vehicles, where vibration and mechanical stress can, in the long-term, affect the quality of conventional contact systems.

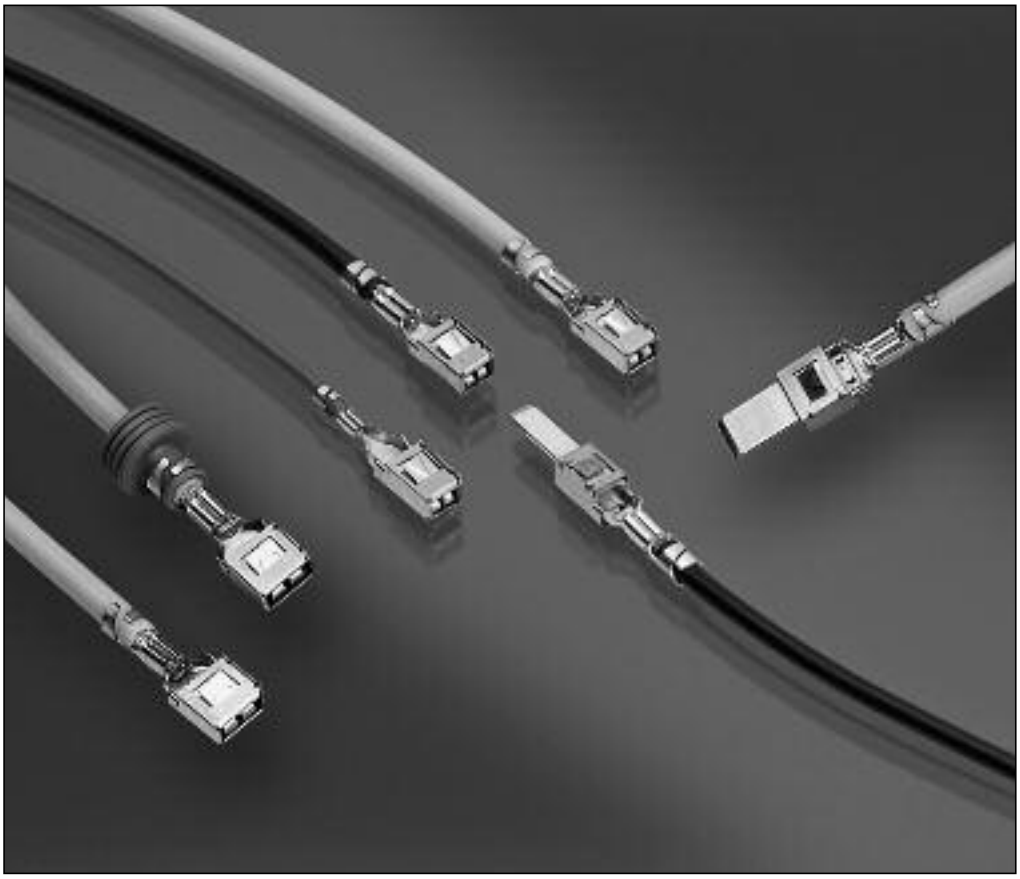

Product Description

Resting upon the standard centerline 2.54 mm Micro Power Quadlok enlarges the MQS contact family in the centreline 5.08 of average and Power Quadlok in the centerline 7.62 of the high capacity. The product family allows a space saving combination of signal- and high current contacts and provides through the standard contact size for a flexible system structure.

The contact system is designed for electronic and electrical applications in motor vehicles, where vibration and mechanical stress can, in the long-term, affect the quality of conventional contact systems.

Receptacle Contacts

Technical Features

Material
Receptacle Contact: CuNiSi
Tab Contact: CuSn
Cantilever Spring: Stainless Steel

Contact Finish:
Tin plated, selective gold plated, Paladium Nickel plated

Wire Size Range:
>0.35–0.5 mm^2
>0.5–1.0 mm^2
>1.0–2.5 mm^2
stranded cable (FLR)

Current Carrying Capacity:
34 A (20 °C)
25 A (80 °C)

Temperature Range:
–40 °C ... +130 °C (tin plated)
–40 °C ... +150 °C (gold plated)

Centerline
Standard: 5.08 x 5.08 mm
Single Wire Sealing System:
7.0 x 7.0 mm

Extraction Tool:
Part No. **6-1579007-3**

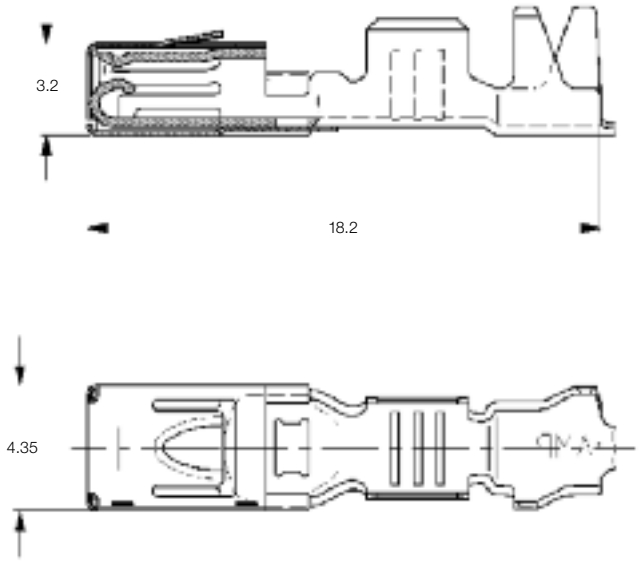

Chart Drawings
Receptacle Contact: 1355934
Tab Contact: 1355933

Product Specification:
108-18476-1

Application Specification:
114-18141-1

Standard Receptacle Contacts

Wire Size Range (mm^2)	Insulation Diameter		Material and Finish	Part Numbers			
	FLK (mm)	FLR (mm)		Strip Form	Package Quantity	Applicator	Hand Tool
0.35–0.5	–	1.2–1.6	tin plated	968678-2	5,000	2151045	539711-1
			gold plated	968678-5	5,000		
>0.5–1.0	–	1.7–2.1	tin plated	968074-2	5,000	2151039	58589-1
			gold plated	968074-5	5,000		
>1.0–2.5	–	2.2–3.0	tin plated	968075-2	4,000	2151067	58590-1
			gold plated	968075-5	4,000		
4.0	–	3.4–3.7	tin plated	1355950-2	3,000	2151051	–

Single Wire Sealing System

Wire Size Range (mm^2)	Insulation Diameter		Material and Finish	Part Numbers			
	FLK (mm)	FLR (mm)		Strip Form	Package Quantity	Applicator	Hand Tool
0.35–0.5	–	1.2–1.6	tin plated	968680-2	3,300	2151692	539712-1
			gold plated	968680-5	3,300		
>0.5–1.0	–	1.7–2.1	tin plated	968119-2	3,000	2151556	58591-1
			gold plated	968119-5	3,000		
			Paladium nickel plated	968119-4	–		
>1.0–2.5	–	2.2–3.0	tin plated	968120-2	3,000	2151577	–
			gold plated	968120-5	3,000		

All specifications subject to change. Consult TE Connectivity for latest specifications.

Pin 2.8 x 0.63 mm, Mates with Micro Power Quadlok

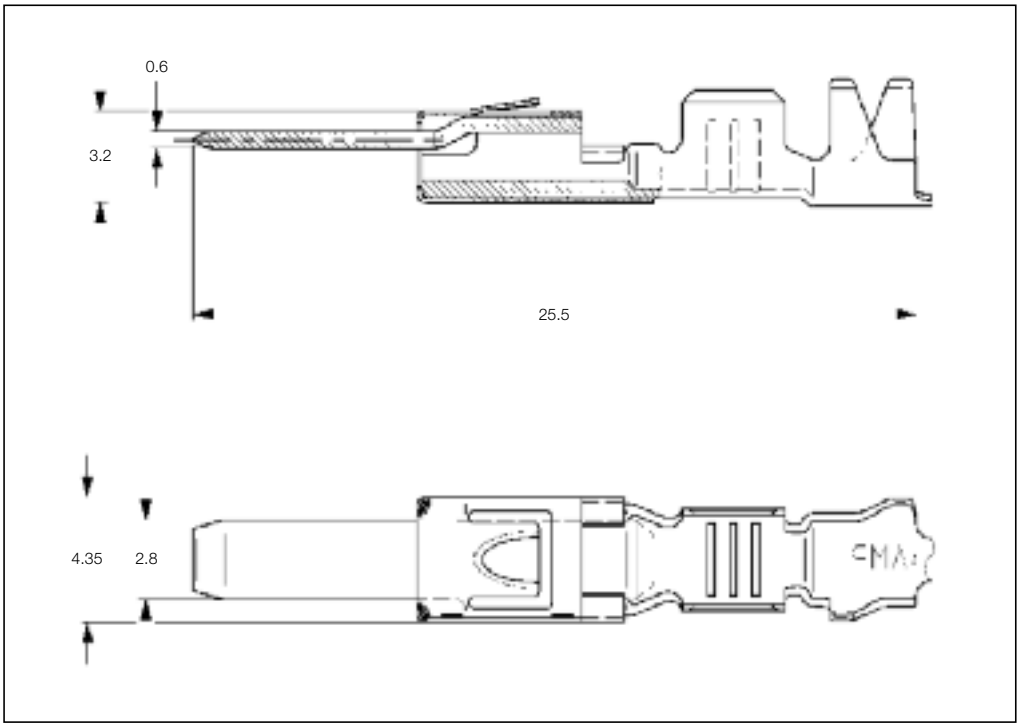

Standard Pin Contacts

Wire Size Range (mm^2)	Insulation Diameter		Material and Finish	Part Numbers				
				Strip Form	Package Quantity	Applicator		Hand Tool
	FLK (mm)	FLR (mm)				Standard	Fine Adjust	
0.35–0.5	–	1.2–1.6	tin plated	968679-2	5,000	–	2151045	539711-1
			gold plated	968679-5	5,000			
>0.5–1.0	–	1.7–2.1	tin plated	968136-2	5,000	–	2151039	58589-1
			gold plated	968136-5	5,000			
>1.0–2.5	–	2.2–3.0	tin plated	968137-2	4,000	1426259	2151067	58590-1
			gold plated	968137-5	4,000			
4.0	–	3.4–3.7	tin plated	1355964-2	3,000	–	2151051	–

Single Wire Sealing System

Wire Size Range (mm^2)	Insulation Diameter		Material and Finish	Part Numbers			
				Strip Form	Package Quantity	Applicator	Hand Tool
	FLK (mm)	FLR (mm)					
0.35–0.5	–	1.2–1.6	tin plated	968681-2	3,500	2151692	539712-1
			gold plated	968681-5	3,500		
>0.5–1.0	–	1.7–2.1	tin plated	968138-2	3,000	2151556	58591-1
			gold plated	968138-5	3,000		
>1.0–2.5	–	2.2–3.0	tin plated	968139-2	3,000	2151577	58591-1
			gold plated	968139-5	3,000		

1

Single Wire Seals and Sealing Plugs for Micro Power Quadlok

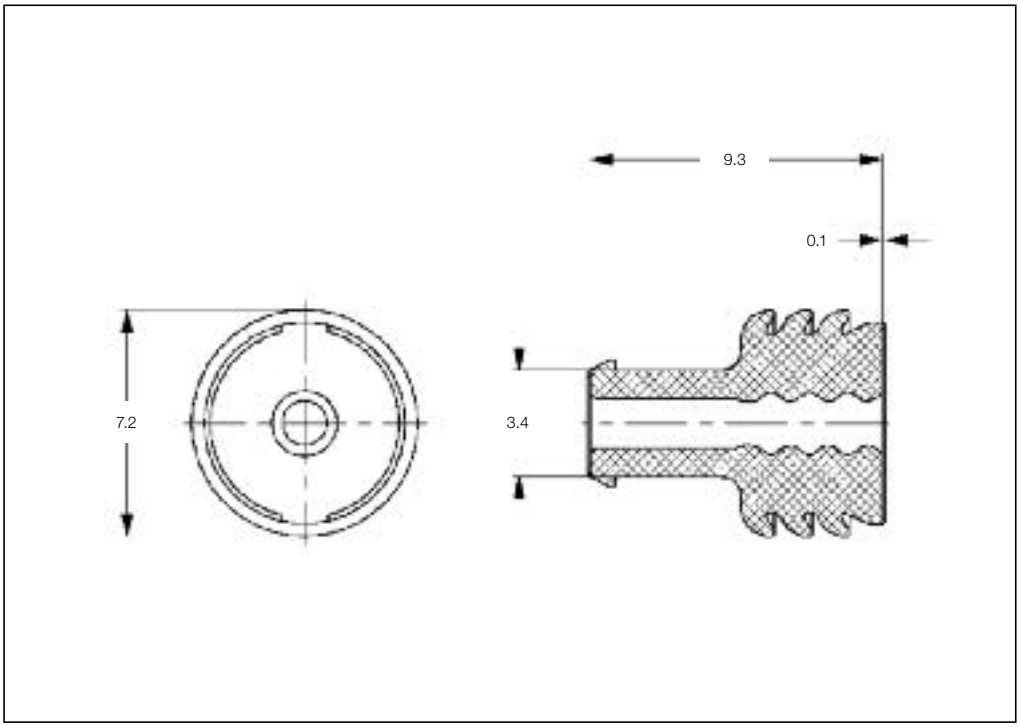

Insulation Diameter		Color	Part Number	Package Quantity
FLK (mm)	FLR (mm)			
–	1.2–2.1	Gray	967610-1	5,000
–	2.2–3.0	Yellow	967609-1	5,000
Sealing Plug		Transparent	967653-1	5,000

All specifications subject to change. Consult TE Connectivity for latest specifications.

Receptacle Contacts

Technical Features

Material
Receptacle Contact: CuNiSi
Tab Contact: CuSn
Cantilever Spring: Stainless Steel

Contact Finish:
Pre-tin plated,
Paladium Nickel plated

Wire Size Range:
>1.0–6.0 mm^2 Single Wires
(Single Wire Sealing System)

Current Carrying Capacity:
4.0 mm^2 (free in air/RT)
45 A (20 °C)
30 A (80 °C)

Temperature Range:
–40 °C to +130 °C (tin plated)

Centerline:
"Pitch 7" Version:
7.62 x 7.0 mm (Standard)
"Pitch 6" Version:
7.62 x 6.0 mm (Standard)
9.1 x 9.1 mm
(Single Wire Sealing System)

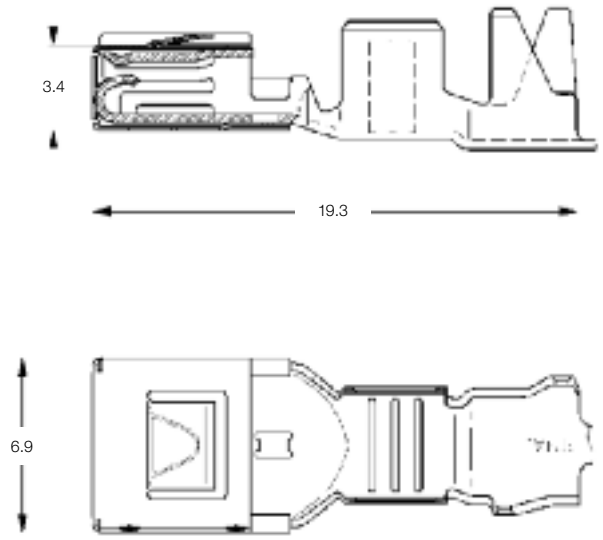

Extraction Tool:
Part No. **6-1579007-4**

Chart Drawings:
Receptacle Contact: 1241638
Tab Contact: 1241639

Product Specification:
108-18476-1

Application Specification:
114-18141-1

Standard Receptacle Contacts

Wire Size Range (mm^2)	Insulation Diameter FLK (mm)	Insulation Diameter FLR (mm)	Material and Finish	Part Numbers: Strip Form	Part Numbers: Package Quantity	Part Numbers: Applicator	Part Numbers: Hand Tool
>1.0–2.5	–	2.2–3.0	pre-tin plated	968072-2*	2,800	2151047	58593-1
				1241601-2**	2,500		
>2.5–4.0	–	3.4–3.7	pre-tin plated	968073-2*	2,300	2151579	58594-1
				1241602-2**	2,400		

* "Pitch 7" Version
** "Pitch 6" Version

Single Wire Sealing System

Wire Size Range (mm^2)	Insulation Diameter FLK (mm)	Insulation Diameter FLR (mm)	Material and Finish	Part Numbers: Strip Form	Part Numbers: Package Quantity	Part Numbers: Applicator	Part Numbers: Hand Tool
>1.0–2.5	–	2.2–3.0	pre-tin plated	968121-2	1,800	2151576	58595-1
			Paladium nickel plated	968121-4	–		
>2.5–4.0	–	3.4–3.7	pre-tin plated	968122-2	1,800	2151574	58596-1
			Paladium nickel plated	968122-4	–		

Pin 5,2 x 0.63 mm, Mates with Power Quadlok

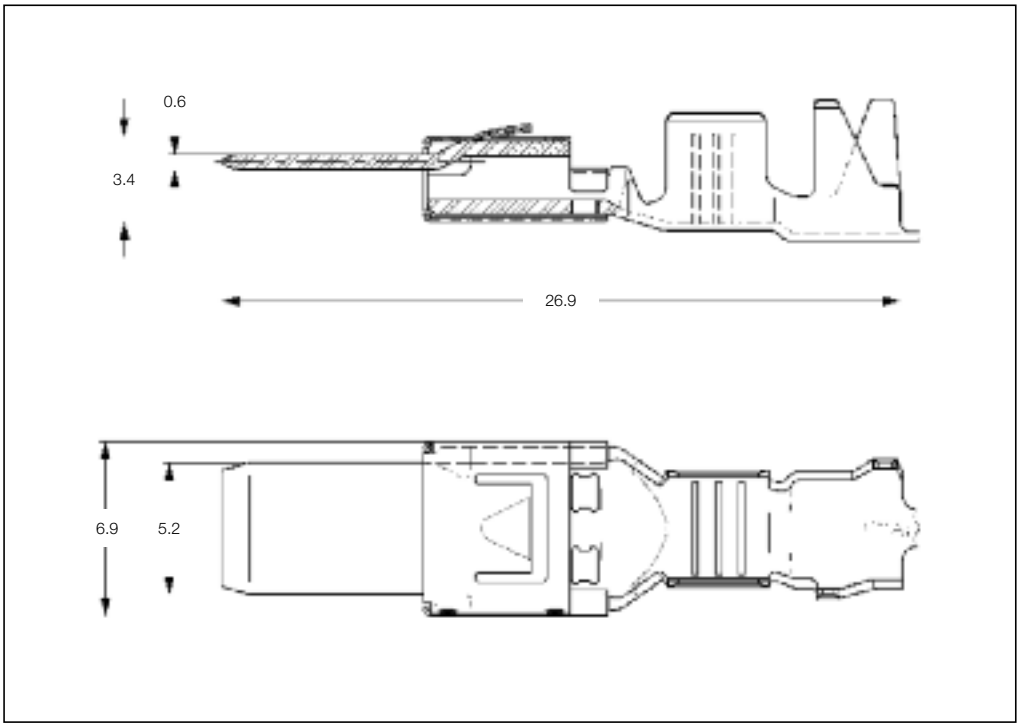

Standard Pin Contacts

Wire Size Range (mm^2)	Insulation Diameter		Material and Finish	Part Numbers			
	FLK (mm)	FLR (mm)		Strip Form	Package Quantity	Applicator	Hand Tool
>1.0–2.5	–	2.2–3.0	pre-tin plated	968131-2*	3,000	2151047	58593-1
				1241614-2**	3,000		
>2.5–4.0	–	3.4–3.7	pre-tin plated	968132-2*	2,300	2151579	58594-1
				1241615-2**	2,300		

* "Pitch 7" Version
** "Pitch 6" Version

Single Wire Sealing System

Wire Size Range (mm^2)	Insulation Diameter		Material and Finish	Part Numbers			
	FLK (mm)	FLR (mm)		Strip Form	Package Quantity	Applicator	Hand Tool
>1.0–2.5	–	2.2–3.0	pre-tin plated	968133-2	2,000	2151576	58595-1
>2.5–4.0	–	3.4–3.7	pre-tin plated	968134-2	2,000	2151574	58596-1

All specifications subject to change. Consult TE Connectivity for latest specifications.

Single Wire Seals and Sealing Plugs for Power Quadlok

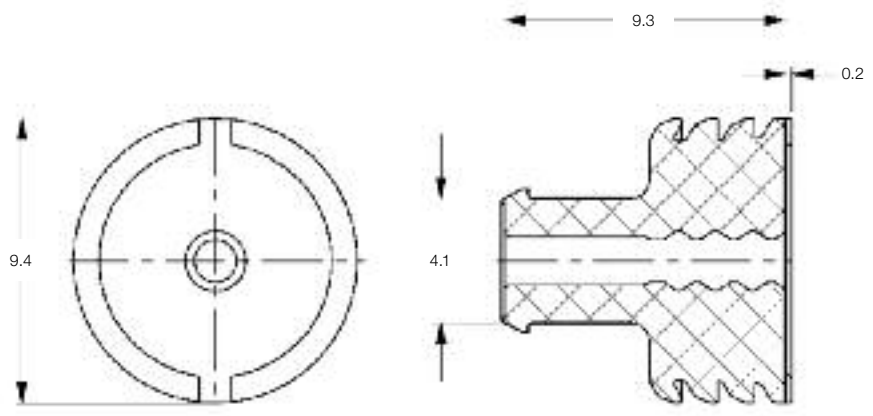

Insulation Diameter		Color	Part Number	Package Quantity
FLK (mm)	FLR (mm)			
–	2.2–3.0	Yellow	967607-1	3,000
–	3.4–3.7	Green	967608-1	3,000
Sealing Plug		Transparent	967652-1	20,000

Engineering Notes

All specifications subject to change. Consult TE Connectivity for latest specifications.

Introduction

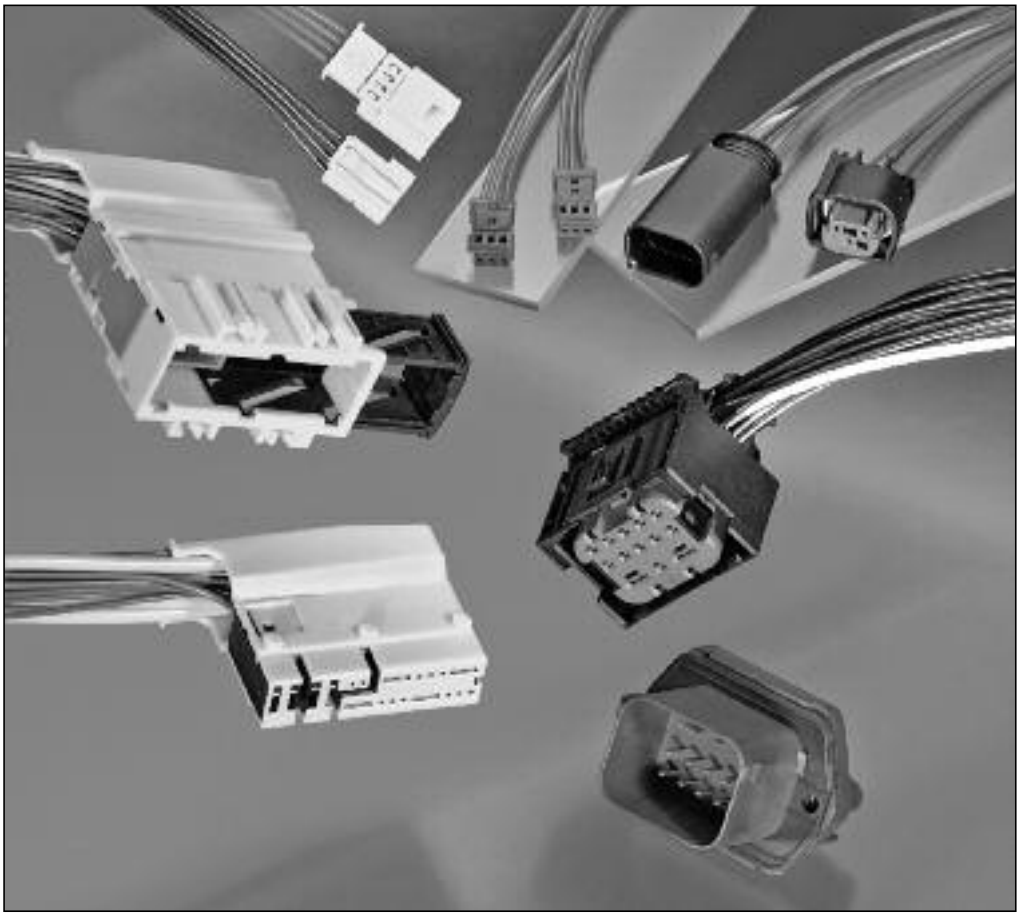

The MQS interconnection offers one of the most compact packages available today with capability for waterproofing and resistance to conditions of extreme vibration.

Waterproofing is achieved with individual wire seals that can be automatically applied during the crimping process. Interfacial sealing is achieved by radial sealing of a multiple ridge design.

Vibration resistance is achieved with a four beam, four contact point system.

A high primary terminal locking force, for such a small size system, is achieved by the use of a stainless steel metal locking lance.

The stainless steel jacket also helps to prevent damage to the small contacts and allows selection of a more optimal material for electro-mechanical performance of the contact beams.

Secondary locking is provided by a pre-assembled plastic device.

Printed Circuit Board Headers

Technical Features

No. of Positions:
8 Positions

Housing Material:
LCP, Glas fibre reinforced

Material and Finish:
CuMg01, Sn over Ni

Product Specification:
108-94313

Application Specification:
114-94160

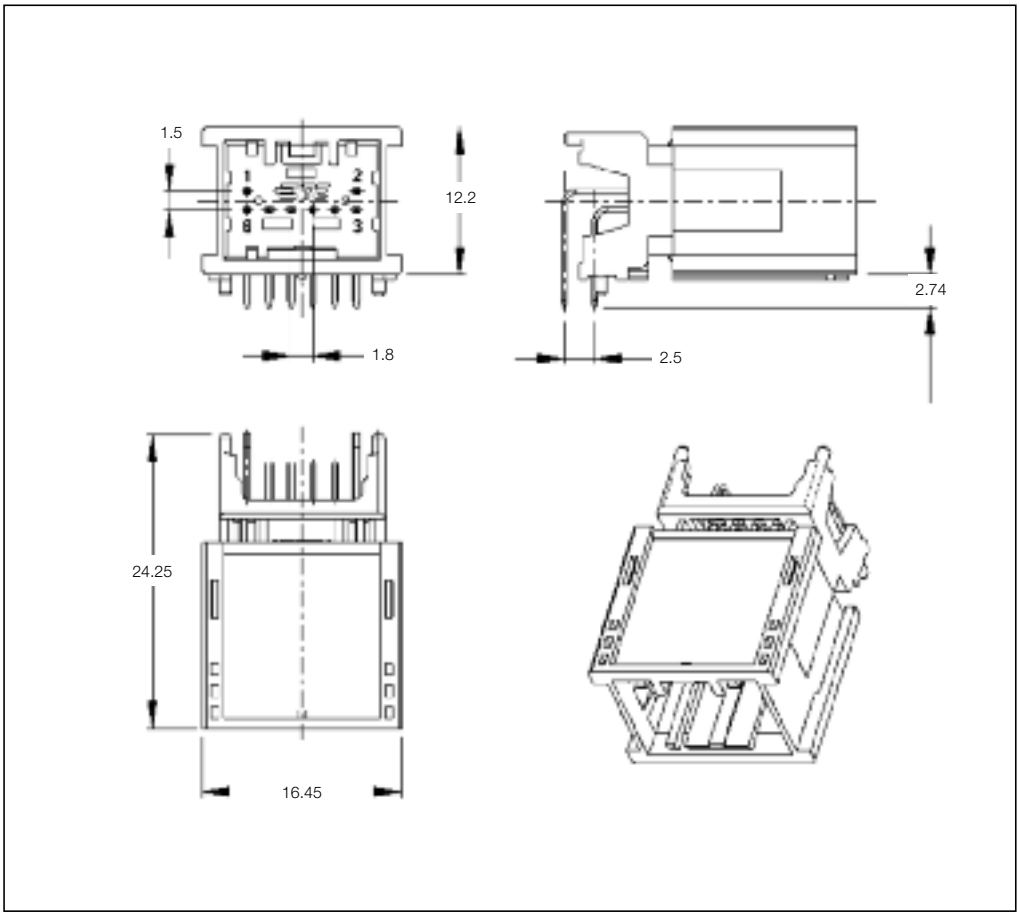

Printed Circuit Board Headers

No. of Positions	Keying Options	Housing Color	Part Numbers				
			PCB Header Right Angle	Cover	Lever	Retainer Housings	Mating Receptacle Housings
8 pos.	Coding A	Black	0-2177372-3	N/A	N/A	N/A	2177586-1
8 pos.	Coding B	Black	1-2177372-3	N/A	N/A	N/A	2177586-2
8 pos.	Coding C	Black	2-2177372-3	N/A	N/A	N/A	2177586-3
8 pos.	Coding D	Black	3-2177372-3	N/A	N/A	N/A	2177586-4

Mating Receptacle Housing
See Page 2-10

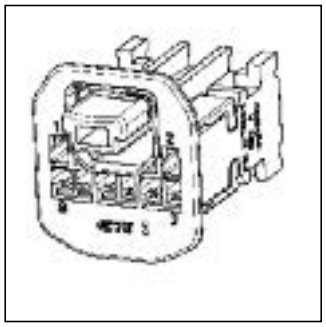

All specifications subject to change. Consult TE Connectivity for latest specifications.

Printed Circuit Board Headers (continued)

Technical Features

No. of Positions:
12 Positions

Housing Material:
LCP, Glas fibre reinforced

Material and Finish:
CuMg01, Sn over Ni

Product Specification:
108-94313

Application Specification:
114-94160

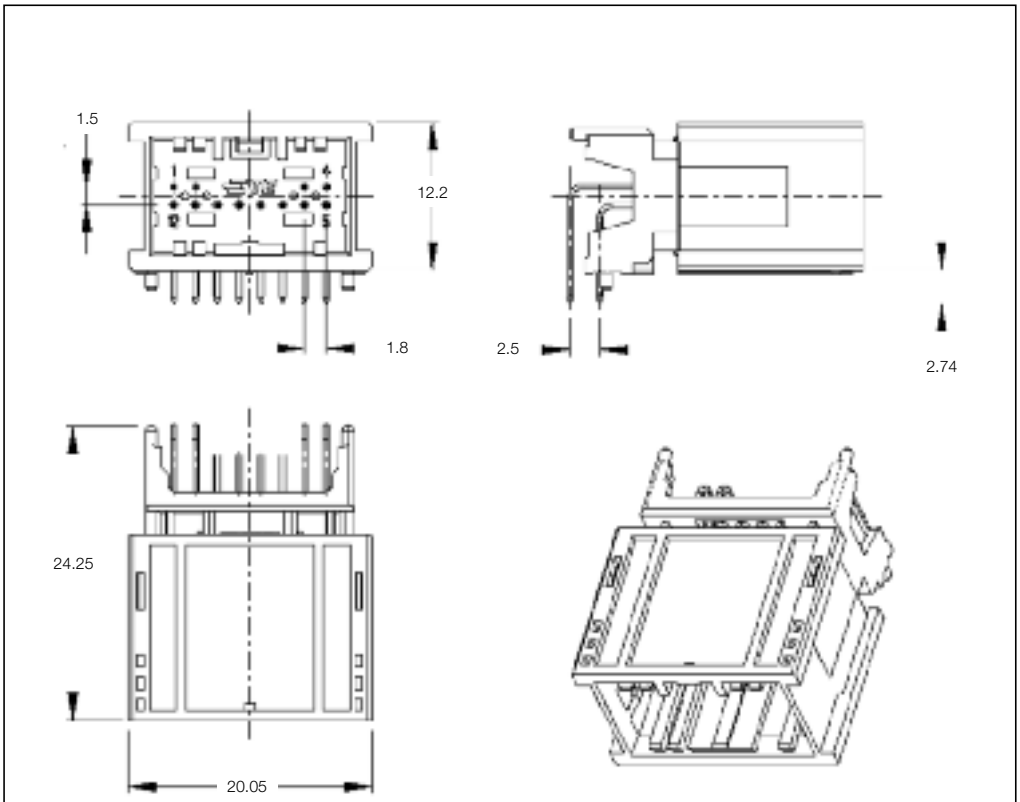

Printed Circuit Board Headers

No. of Positions	Keying Options	Housing Color	Part Numbers				
			PCB Header Right Angle	Cover	Lever	Retainer Housings	Mating Receptacle Housings
12 pos.	Coding A	Black	0-2177370-3	N/A	N/A	N/A	2177587-1
12 pos.	Coding B	Black	1-2177370-3	N/A	N/A	N/A	2177587-2
12 pos.	Coding C	Black	2-2177370-3	N/A	N/A	N/A	2177587-3
12 pos.	Coding D	Black	3-2177370-3	N/A	N/A	N/A	2177587-4

Mating Receptacle Housing
See Page 2-11

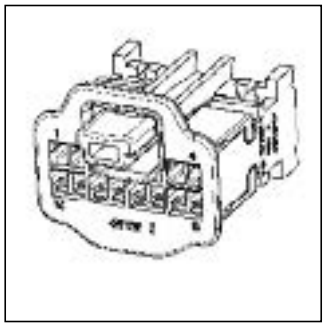

Printed Circuit Board Headers (continued)

Technical Features

No. of Positions:
20 Positions

Housing Material:
LCP, Glas fibre reinforced

Material and Finish:
CuMg01, Sn over Ni

Product Specification:
108-94313

Application Specification:
114-94160

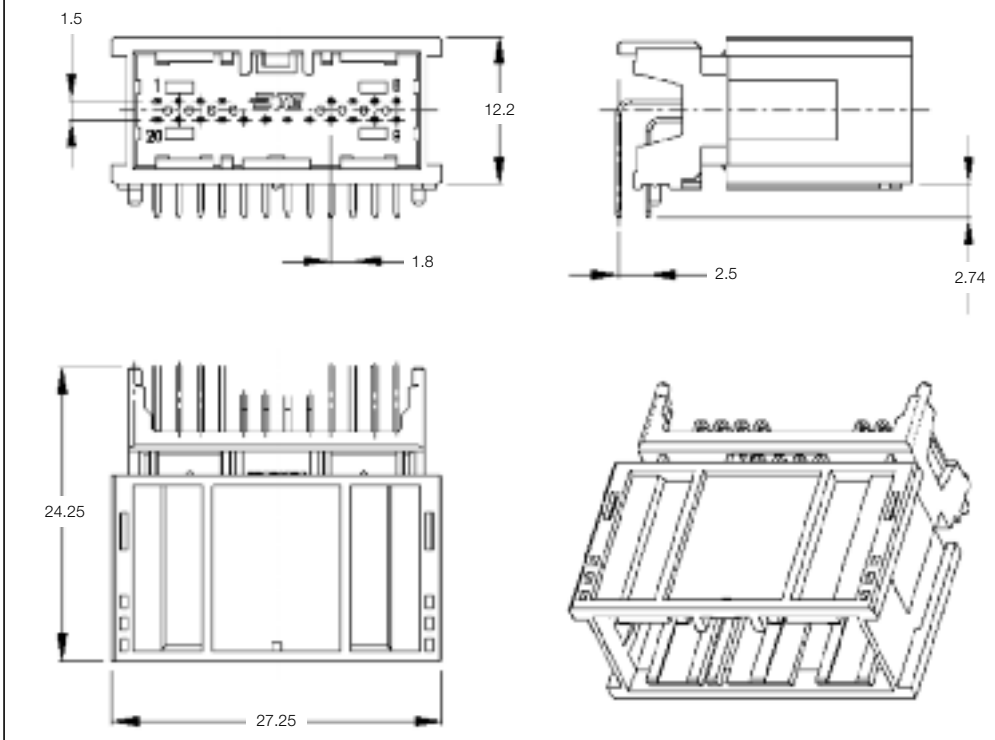

Printed Circuit Board Headers

No. of Positions	Keying Options	Housing Color	Part Numbers				
			PCB Header Right Angle	Cover	Lever	Retainer Housings	Mating Receptacle Housings
20 pos.	Coding A	Black	0-2177367-3	N/A	N/A	N/A	2177588-1
20 pos.	Coding B	Black	1-2177367-3	N/A	N/A	N/A	2177588-2
20 pos.	Coding C	Black	2-2177367-3	N/A	N/A	N/A	2177588-3
20 pos.	Coding D	Black	3-2177367-3	N/A	N/A	N/A	2177588-4

Mating Receptacle Housing
See Page 2-12

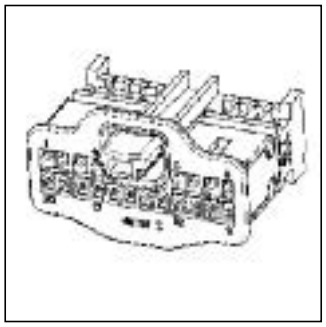

All specifications subject to change. Consult TE Connectivity for latest specifications.

Printed Circuit Board Headers (continued)

Technical Features

No. of Positions:
32 Positions

Housing Material:
LCP, Glas fibre reinforced

Material and Finish:
CuMg01, Sn over Ni

Product Specification:
108-94313

Application Specification:
114-94160

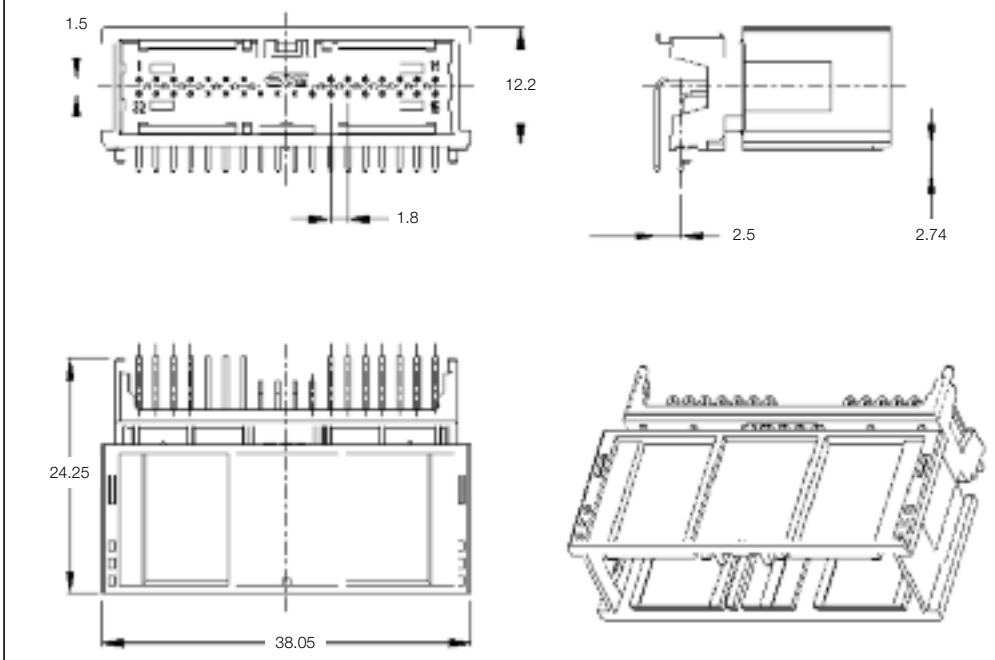

Printed Circuit Board Headers

No. of Positions	Keying Options	Housing Color	Part Numbers				
			PCB Header Right Angle	Cover	Lever	Retainer Housings	Mating Receptacle Housings
32 pos.	Coding A	Black	0-2177419-3	N/A	N/A	N/A	2141576-1
32 pos.	Coding B	Black	1-2177419-3	N/A	N/A	N/A	2141576-2
32 pos.	Coding C	Black	2-2177419-3	N/A	N/A	N/A	2141576-3
32 pos.	Coding D	Black	3-2177419-3	N/A	N/A	N/A	2141576-4

Mating Receptacle Housing
See Page 2-13

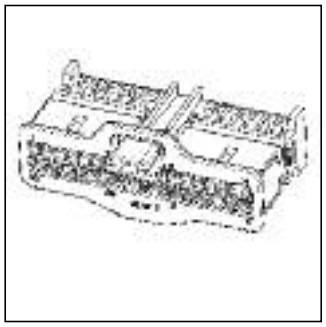

Printed Circuit Board Headers (continued)

Technical Features

No. of Positions:
8 Positions

Housing Material:
LCP, Glas fibre reinforced

Material and Finish:
CuMg01, Sn over Ni

Product Specification:
108-94313

Application Specification:
114-94160

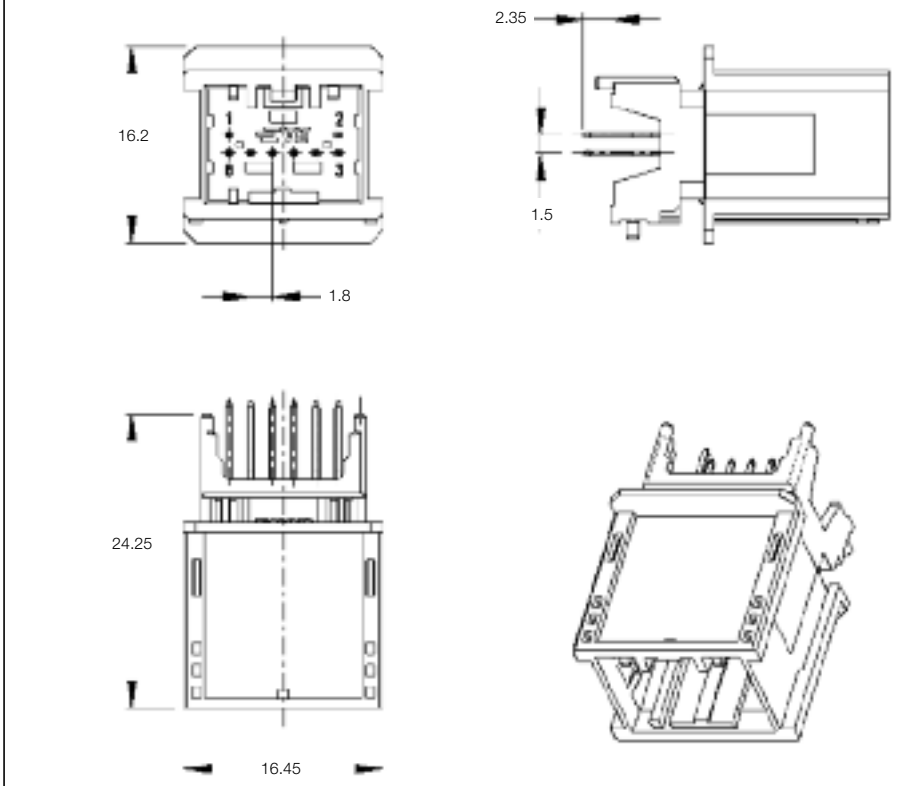

Printed Circuit Board Headers

No. of Positions	Keying Options	Housing Color	Part Numbers				
			PCB Header Vertical	Cover	Lever	Retainer Housings	Mating Receptacle Housings
8 pos.	Coding A	Black	0-2177768-3	N/A	N/A	N/A	2177586-1
8 pos.	Coding B	Black	1-2177768-3	N/A	N/A	N/A	2177586-2
8 pos.	Coding C	Black	2-2177768-3	N/A	N/A	N/A	2177586-3
8 pos.	Coding D	Black	3-2177768-3	N/A	N/A	N/A	2177586-4

Mating Receptacle Housing
See Page 2-10

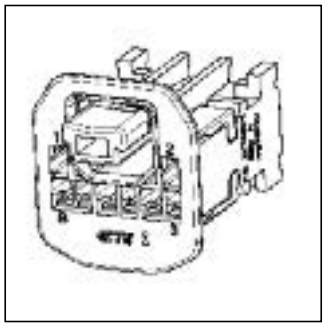

All specifications subject to change. Consult TE Connectivity for latest specifications.

Printed Circuit Board Headers (continued)

Technical Features

No. of Positions:
12 Positions

Housing Material:
LCP, Glas fibre reinforced

Material and Finish:
CuMg01, Sn over Ni

Product Specification:
108-94313

Application Specification:
114-94160

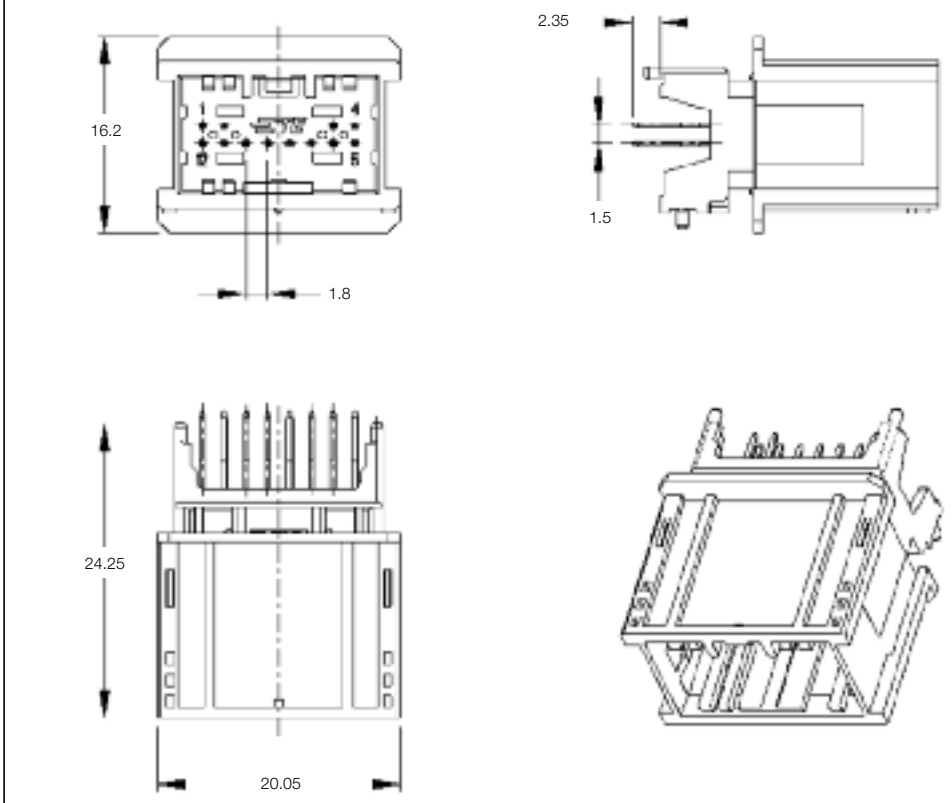

Printed Circuit Board Headers

No. of Positions	Keying Options	Housing Color	Part Numbers				
			PCB Header Vertical	Cover	Lever	Retainer Housings	Mating Receptacle Housings
12 pos.	Coding A	Black	0-2177767-3	N/A	N/A	N/A	2177587-1
12 pos.	Coding B	Black	1-2177767-3	N/A	N/A	N/A	2177587-2
12 pos.	Coding C	Black	2-2177767-3	N/A	N/A	N/A	2177587-3
12 pos.	Coding D	Black	3-2177767-3	N/A	N/A	N/A	2177587-4

Mating Receptacle Housing
See Page 2-11

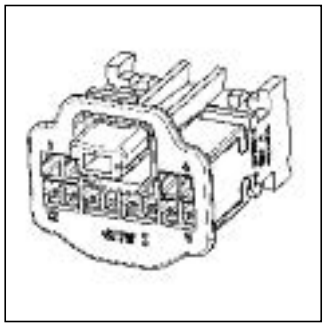

Printed Circuit Board Headers (continued)

Technical Features

No. of Positions:
20 Positions

Housing Material:
LCP, Glas fibre reinforced

Material and Finish:
CuMg01, Sn over Ni

Product Specification:
108-94313

Application Specification:
114-94160

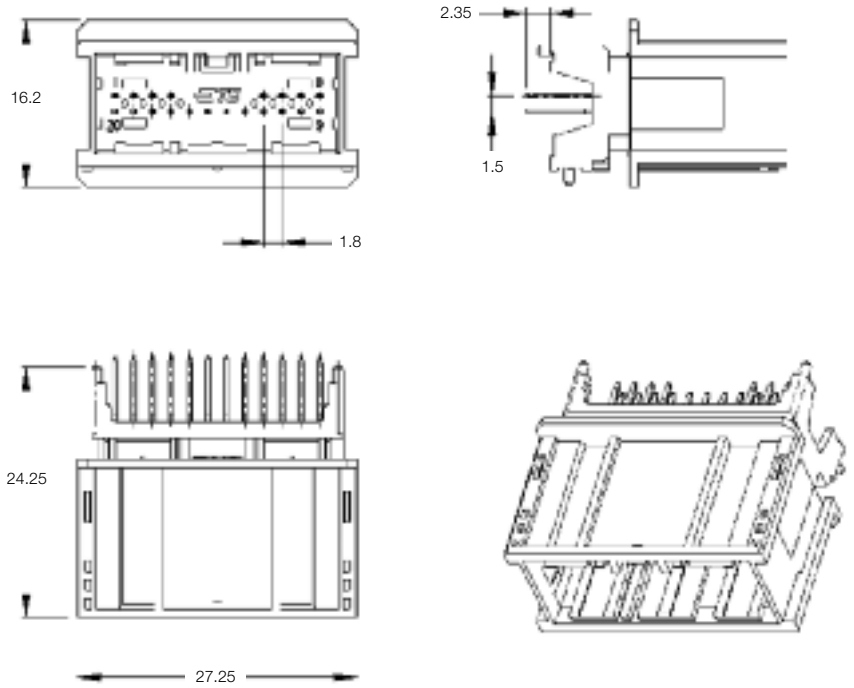

Printed Circuit Board Headers

No. of Positions	Keying Options	Housing Color	Part Numbers				
			PCB Header Vertical	Cover	Lever	Retainer Housings	Mating Receptacle Housings
20 pos.	Coding A	Black	0-2177766-3	N/A	N/A	N/A	2177588-1
20 pos.	Coding B	Black	1-2177766-3	N/A	N/A	N/A	2177588-2
20 pos.	Coding C	Black	2-2177766-3	N/A	N/A	N/A	2177588-3
20 pos.	Coding D	Black	3-2177766-3	N/A	N/A	N/A	2177588-4

Mating Receptacle Housing
See Page 2-12

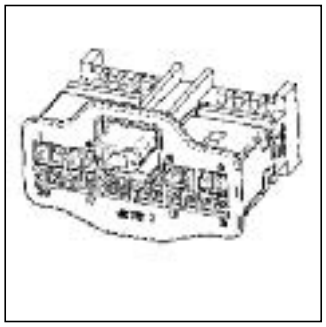

All specifications subject to change. Consult TE Connectivity for latest specifications.

Printed Circuit Board Headers (continued)

Technical Features

No. of Positions:
32 Positions

Housing Material:
LCP-GF30 / LCP-GF35

Material and Finish:
CuMg01, Sn over NiMating

Product Specification:
108-94313

Application Specification:
114-94160

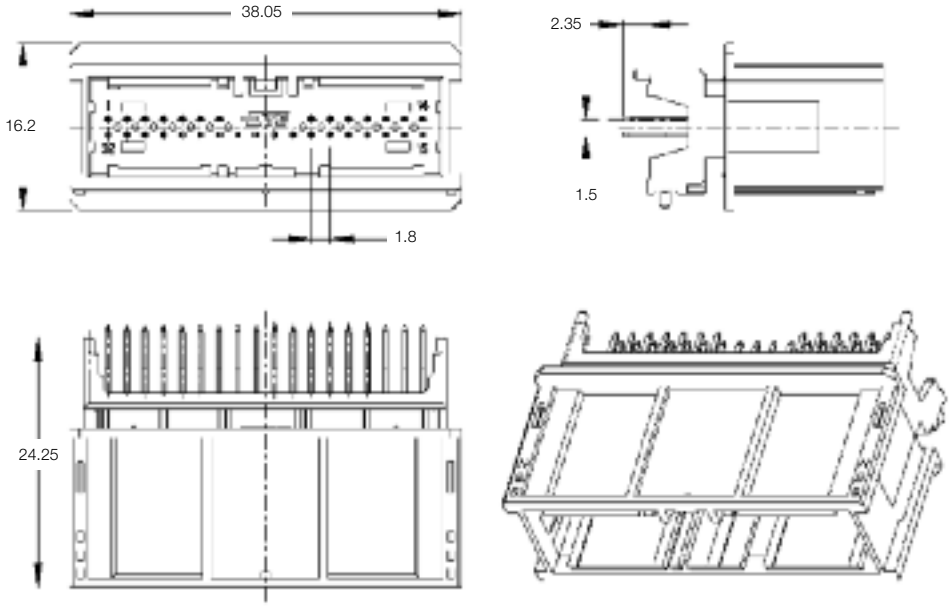

Printed Circuit Board Headers

No. of Positions	Keying Options	Housing Color	Part Numbers				
			PCB Header Vertical	Cover	Lever	Retainer Housings	Mating Receptacle Housings
32 pos.	Coding A	Black	0-2177748-3	N/A	N/A	N/A	2141576-1
32 pos.	Coding B	Black	1-2177748-3	N/A	N/A	N/A	2141576-2
32 pos.	Coding C	Black	2-2177748-3	N/A	N/A	N/A	2141576-3
32 pos.	Coding D	Black	3-2177748-3	N/A	N/A	N/A	2141576-4

Mating Receptacle Housing
See Page 2-13

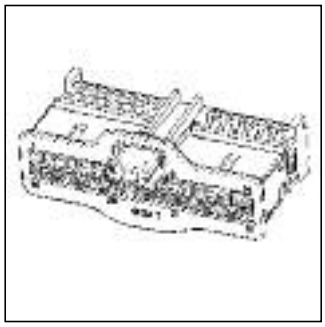

Receptacle Housings

Technical Features

No. of Positions:
8 Positions

Housing Material:
PBT Glas fibre reinforced

Wire Size Range:
0.13–0.35 mm^2

Product Specification:
108-94315

Application Specification:
114-94160

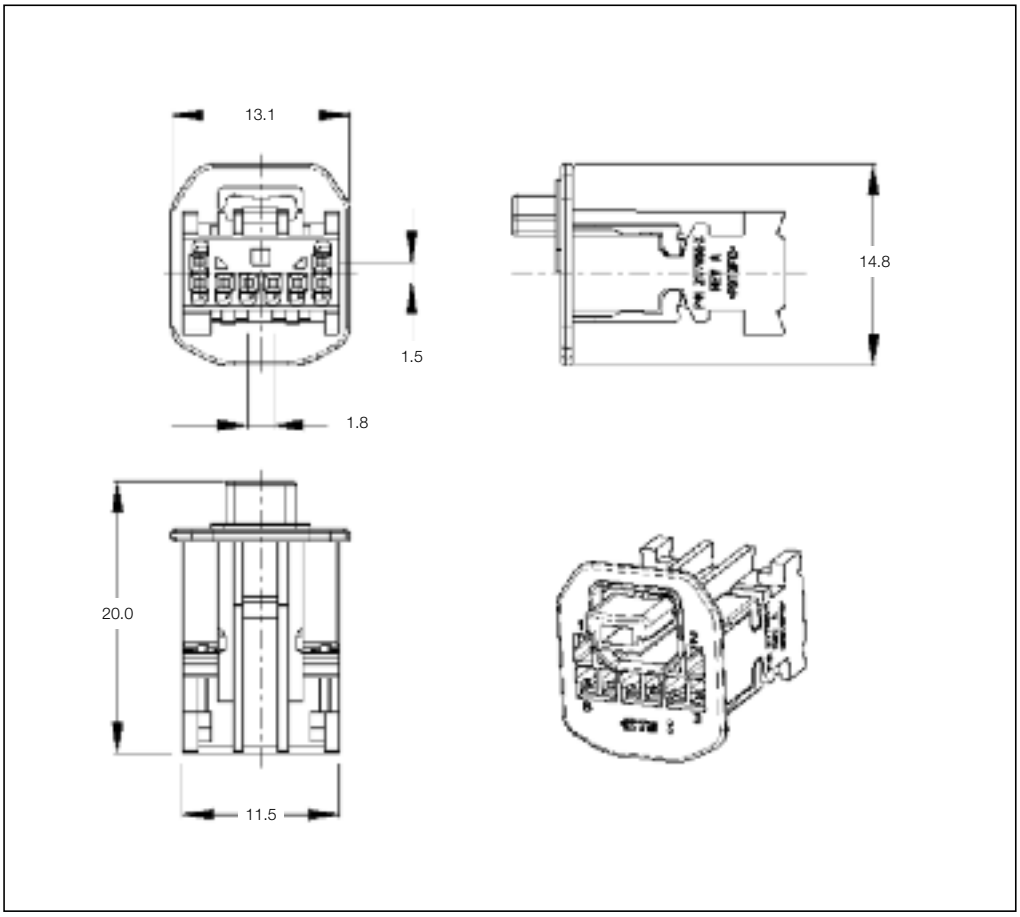

Receptacle Housings

No. of Positions	Keying Options	Housing Color	Part Numbers						
			Receptacle Housing	Cover	Locking Device	Cover and Lever	Mating Tab Housing	Mating PCB Headers	
								Right Angle	Vertical
8 pos.	Coding A	Black	2177586-1	N/A	N/A	N/A	N/A	0-2177372-3	0-2177768-3
8 pos.	Coding B	Black	2177586-2	N/A	N/A	N/A	N/A	1-2177372-3	1-2177768-3
8 pos.	Coding C	Black	2177586-3	N/A	N/A	N/A	N/A	2-2177372-3	2-2177768-3
8 pos.	Coding D	Black	2177586-4	N/A	N/A	N/A	N/A	3-2177372-3	3-2177768-3

Mating Receptacle Housing Right Angle **See Page 2-2**

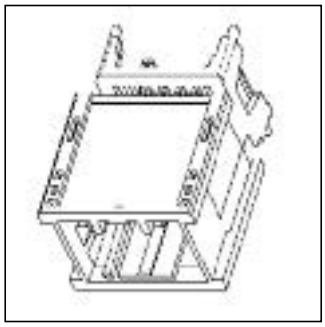

Mating Receptacle Housing Vertical **See Page 2-6**

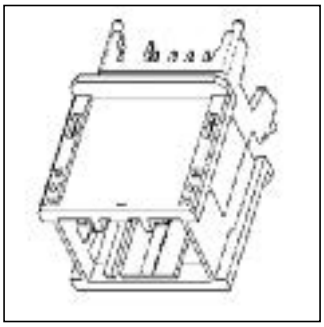

All specifications subject to change. Consult TE Connectivity for latest specifications.

Receptacle Housings (continued)

Technical Features

No. of Positions:
12 Positions

Housing Material:
PBT Glas fibre reinforced

Wire Size Range:
0.13–0.35 mm^2

Product Specification:
108-94315

Application Specification:
114-94160

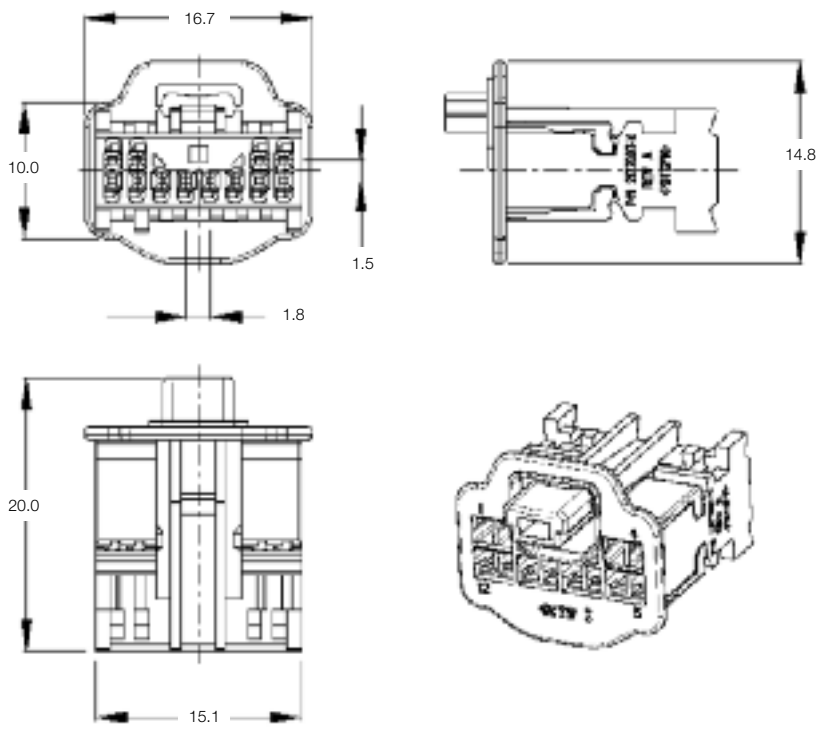

Receptacle Housings

No. of Positions	Keying Options	Housing Color	Part Numbers						
			Receptacle Housing	Cover	Locking Device	Cover and Lever	Mating Tab Housing	Mating PCB Headers	
								Right Angle	Vertical
12 pos.	Coding A	Black	2177587-1	N/A	N/A	N/A	N/A	0-2177370-3	0-2177767-3
12 pos.	Coding B	Black	2177587-2	N/A	N/A	N/A	N/A	1-2177370-3	1-2177767-3
12 pos.	Coding C	Black	2177587-3	N/A	N/A	N/A	N/A	2-2177370-3	2-2177767-3
12 pos.	Coding D	Black	2177587-4	N/A	N/A	N/A	N/A	3-2177370-3	3-2177767-3

Mating Receptacle Housing Right Angle **See Page 2-3**

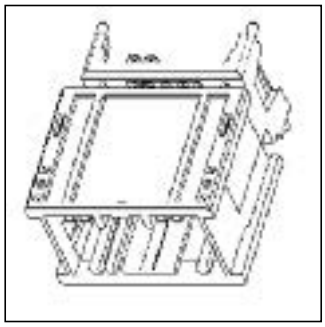

Mating Receptacle Housing Vertical **See Page 2-9**

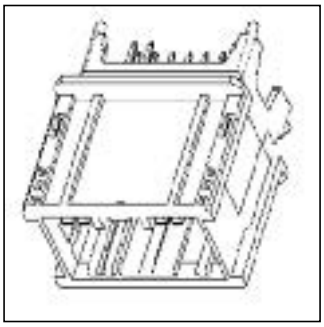

Receptacle Housings (continued)

Technical Features

No. of Positions:
20 Positions

Housing Material:
PBT Glas fibre reinforced

Material and Finish:
CuMg01, Sn over NiMating

Product Specification:
108-94313

Application Specification:
114-94160

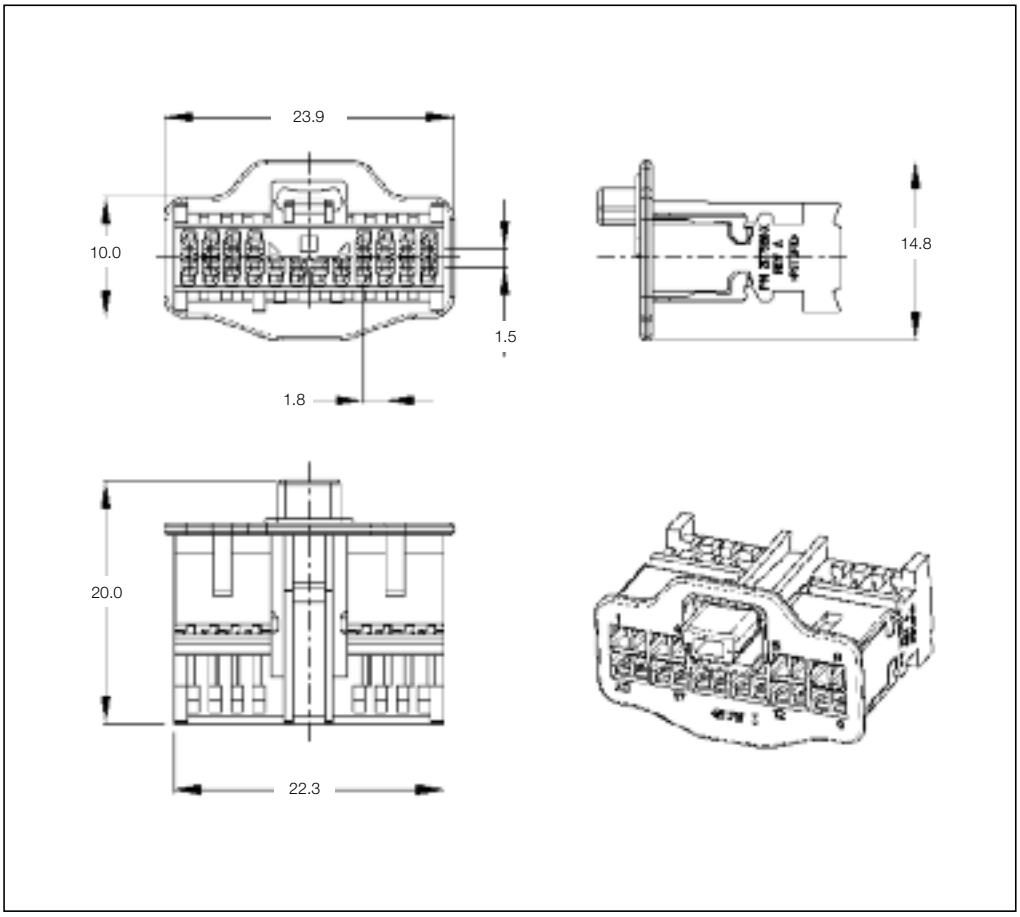

Receptacle Housings

No. of Positions	Keying Options	Housing Color	Part Numbers						
			Receptacle Housing	Cover	Locking Device	Cover and Lever	Mating Tab Housing	Mating PCB Headers	
								Right Angle	Vertical
20 pos.	Coding A	Black	2177588-1	N/A	N/A	N/A	N/A	0-2177367-3	0-2177766-3
20 pos.	Coding B	Black	2177588-2	N/A	N/A	N/A	N/A	1-2177367-3	1-2177766-3
20 pos.	Coding C	Black	2177588-3	N/A	N/A	N/A	N/A	2-2177367-3	2-2177766-3
20 pos.	Coding D	Black	2177588-4	N/A	N/A	N/A	N/A	3-2177367-3	3-2177766-3

Mating Receptacle Housing Right Angle **See Page 2-4**

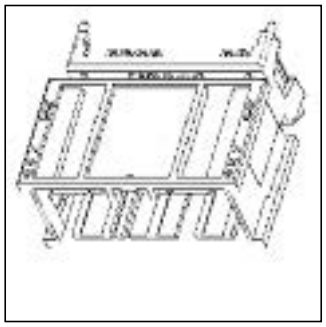

Mating Receptacle Housing Vertical **See Page 2-8**

All specifications subject to change. Consult TE Connectivity for latest specifications.

Receptacle Housings (continued)

Technical Features

No. of Positions:
32 Positions

Housing Material:
PBT Glas fibre reinforced

Material and Finish:
CuMg01, Sn over NiMating

Product Specification:
108-94313

Application Specification:
114-94160

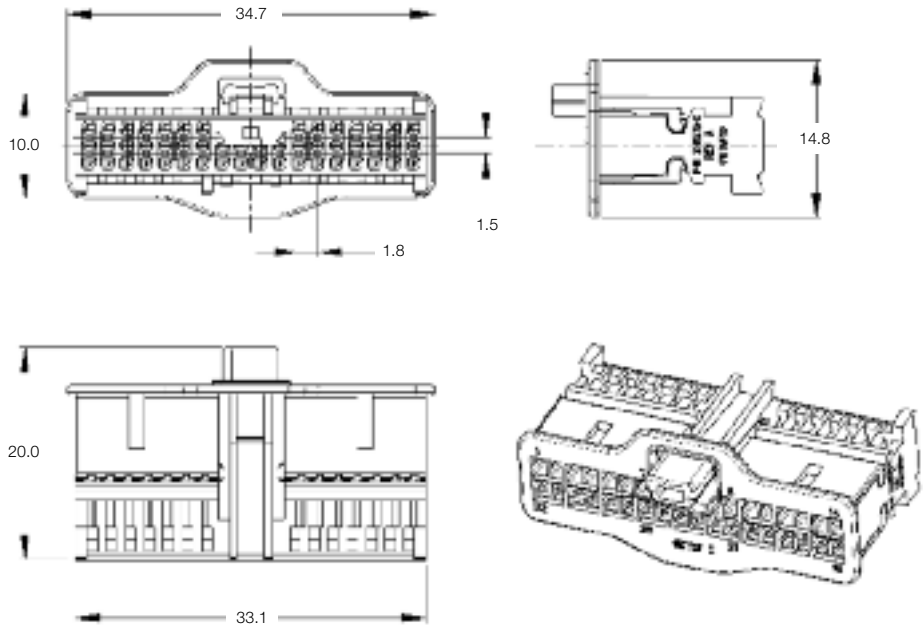

Receptacle Housings

No. of Positions	Keying Options	Housing Color	Part Numbers						
			Receptacle Housing	Cover	Locking Device	Cover and Lever	Mating Tab Housing	Mating PCB Headers	
								Right Angle	Vertical
32 pos.	Coding A	Black	2141576-1	N/A	N/A	N/A	N/A	0-2177419-3	0-2177748-3
32 pos.	Coding B	Black	2141576-2	N/A	N/A	N/A	N/A	1-2177419-3	1-2177748-3
32 pos.	Coding C	Black	2141576-3	N/A	N/A	N/A	N/A	2-2177419-3	2-2177748-3
32 pos.	Coding D	Black	2141576-4	N/A	N/A	N/A	N/A	3-2177419-3	3-2177748-3

Mating Receptacle Housing Right Angle **See Page 2-5**

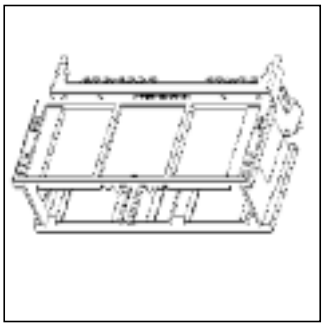

Mating Receptacle Housing Vertical **See Page 2-9**

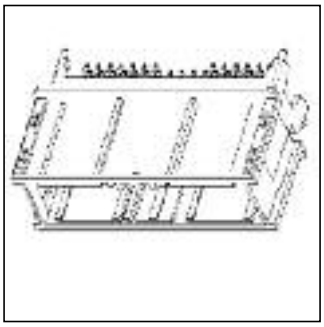

Engineering Notes

All specifications subject to change. Consult TE Connectivity for latest specifications.

Receptacle Housings

Technical Features

No. of Positions:
2 Positions

Housing Material:
PBT GF10

Wire Size Range:
0.14–0.75 mm^2

Product Specification:
118-18924

Application Specification:
114-18630

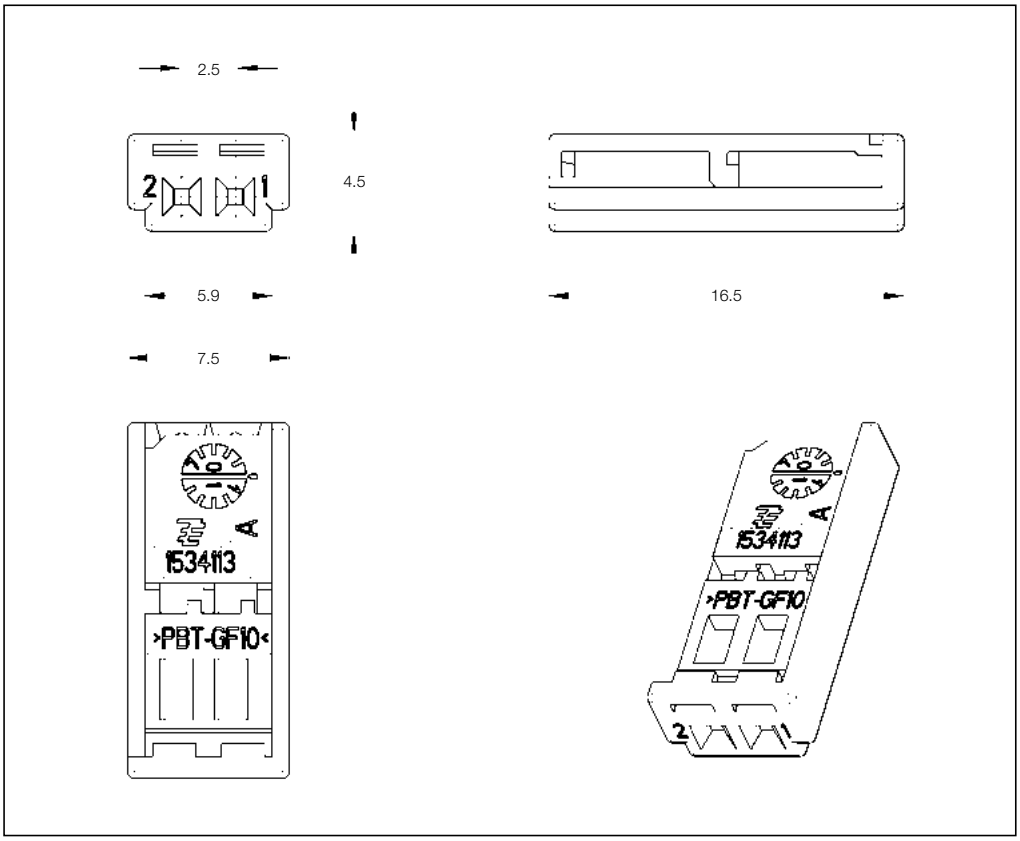

2 Position Receptacle Housings

No. of Pos.	Keying Options	Housing Color	Part Numbers							
			Receptacle Housing	Cover	Locking Device	Cover and Lever	Retainer Housing	Mating Pin Housing	Mating PCB Header Right-Angle	Mating PCB Header Vertical
2	–	Black	1-1534113-1	–	–	–	1534112-1	1-1534155-1 & 1534027-1	–	–

Mating Pin Housing
See Page 3-3

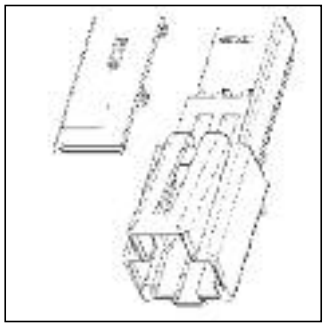

Receptacle Housings

3

Technical Features

No. of Positions:
2 Positions

Housing Material:
PBT GF10

Wire Size Range:
0.20–0.75 mm²

Product Specification:
—

Application Specification:
—

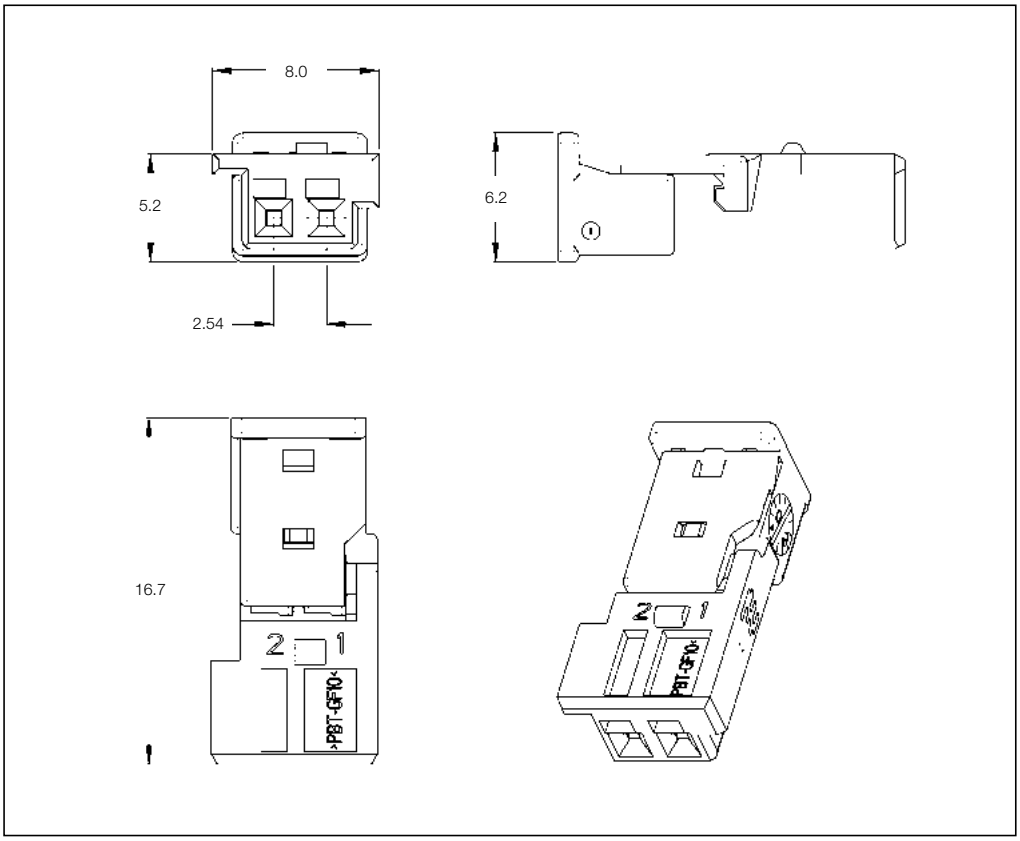

2 Position Receptacle Housings

No. of Pos.	Keying Options	Housing Color	Part Numbers						
			Receptacle Housing	Cover	Lever	Retainer Housing	Mating Pin Housing	Mating PCB Header Right-Angle	Mating PCB Header Vertical
2	A	Black	1-1718333-1	–	–	–	1-968699-1 2-968699-1	–	–
	B	Natural	2-1718333-1						
	C	Blue	3-1718333-1						
	D	Claret Violet	4-1718333-1						
	Z	Water Blue	9-1718333-1						

Mating Pin Housing
See Page 3-4

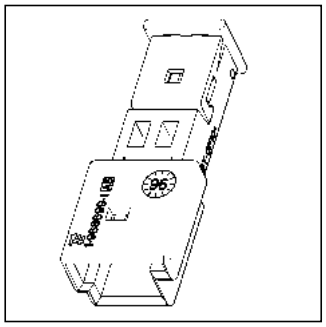

All specifications subject to change. Consult TE Connectivity for latest specifications.

Pin Housings

Technical Features

No. of Positions:
2 Positions

Housing Material:
PBT GF

Wire Size Range:
0.14–0.75 mm^2

Product Specification:
108-18924

Application Specification:
114-18630

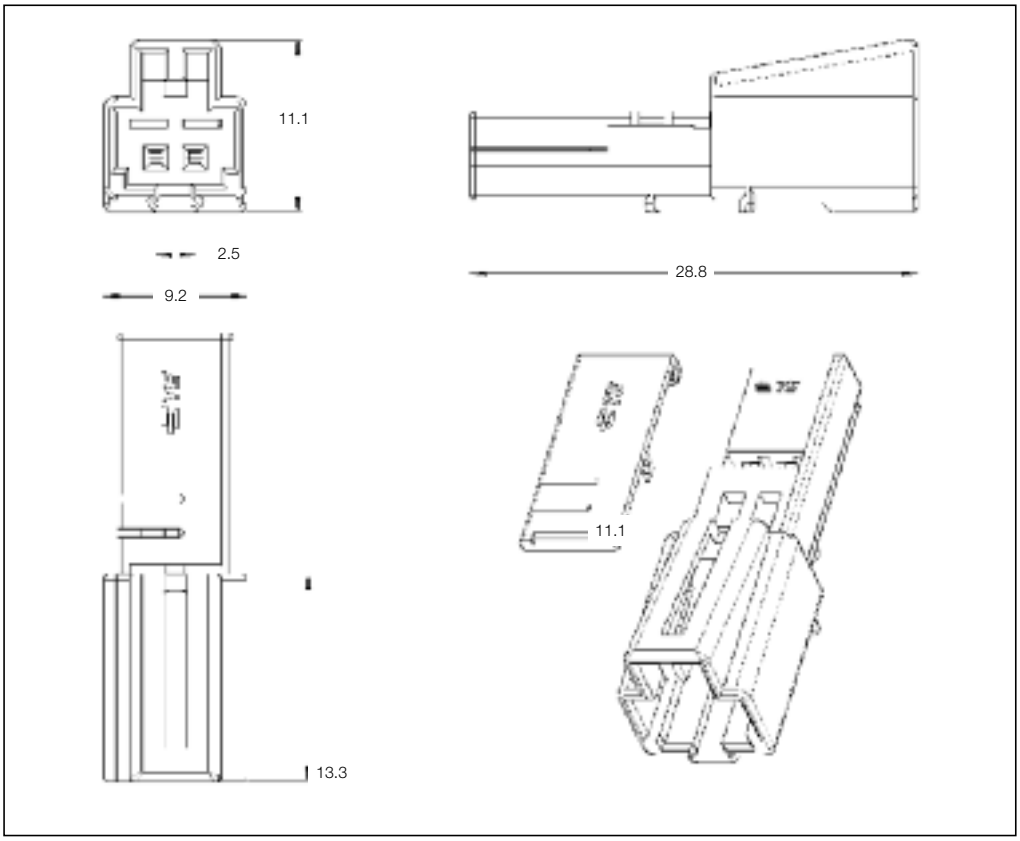

2 Position Pin Housing

No. of Pos.	Keying Options	Housing Color	Part Numbers					
			Pin Housing	Cover	Locking Device	Cover and Lever	Retainer Housing	Mating Receptacle Housing
2	–	Black	1-1534155-1	–	–	–	1534027-1	1-1534113-1 & 1534112-1

Mating Receptacle Housing
See Page 3-1

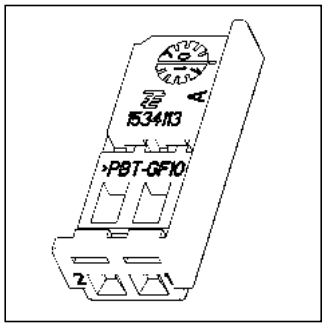

Pin Housings

3

Technical Features

No. of Positions:
2 Positions

Housing Material:
PBT GF10

Wire Size Range:
0.2–0.75 mm²

Product Specification:
108-18590-0

Application Specification:
114-18225

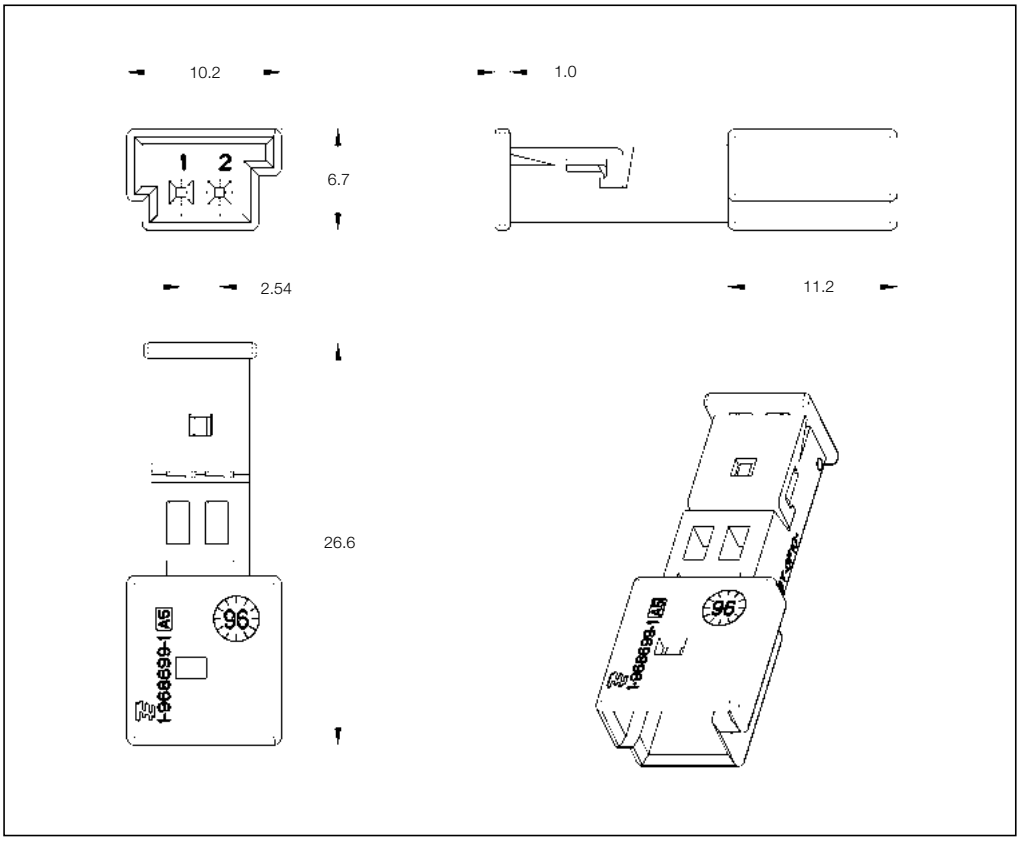

2 Position Pin Housings

No. of Pos.	Keying Options	Housing Color	Part Numbers					
			Pin Housing	Cover	Locking Device	Cover and Lever	Retainer Housing	Mating Receptacle Housing
2	A	Black	1-968699-1	–	–	–	–	1-1718333-1
	B	Natural	2-968699-1					2-1718333-1

Mating Pin Housing
See Page 3-3

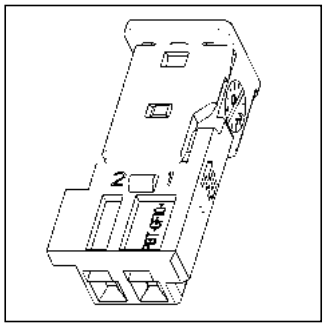

All specifications subject to change. Consult TE Connectivity for latest specifications.

Receptacle Housings

Technical Features

No. of Positions:
3 Positions

Housing Material:
PBT GF15

Wire Size Range:
0.20–0.60 mm^2

Product Specification:
108-15132

Application Specification:
411-15553

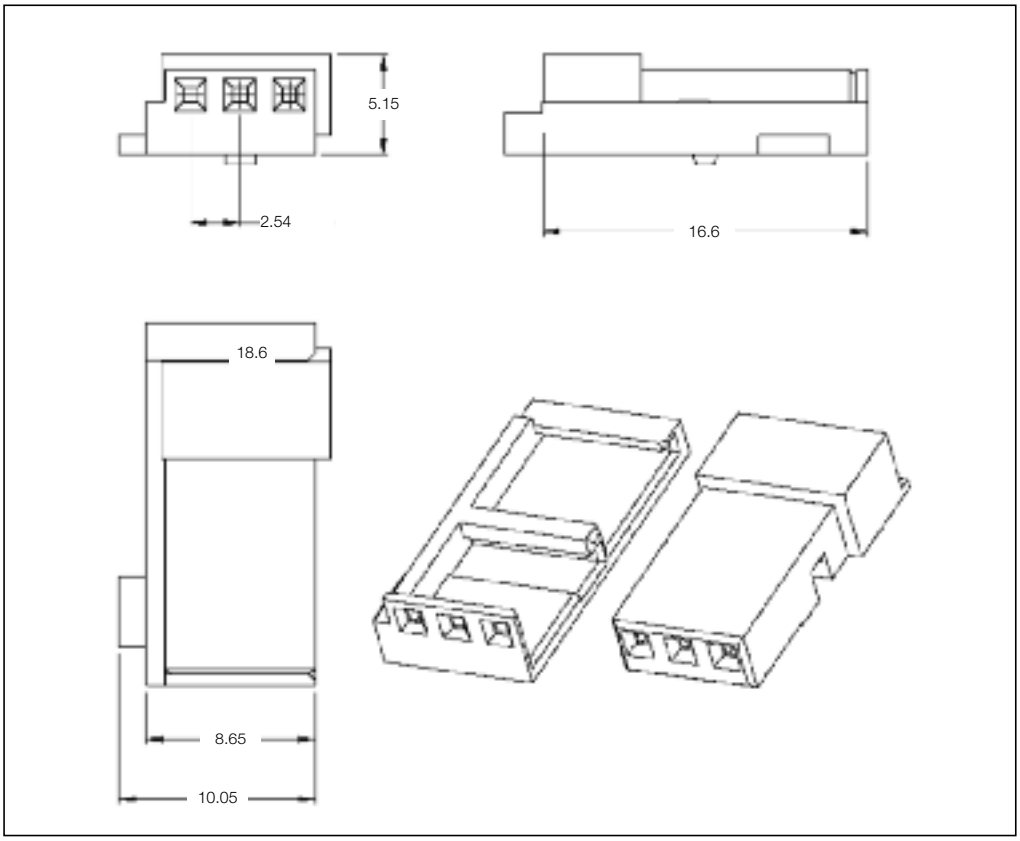

3 Position Receptacle Housings

No. of Pos.	Keying Options	Housing Color	Part Numbers							
			Receptacle Housing	Cover	Locking Device	Cover and Lever	Retainer Housing	Mating Pin Housing	Mating PCB Header Right-Angle	Mating PCB Header Vertical
3	–	Black	185309-1	185308-1	–	–	–	–	–	185730-1
		Natural	–	185308-2	–	–	–	–	–	–
		Blue	–	185308-3						
		Yellow	–	185308-4						

Mating Pin Housing
See Page 3-12

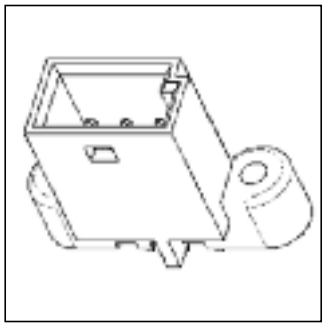

Receptacle Housings

Technical Features

No. of Positions:
3 Positions
(Positive Mate Locking)

Housing Material:
PBT GF20

Wire Size Range:
0.35–0.75 mm^2

Product Specification:
108-15236

Application Specification:
411-15526

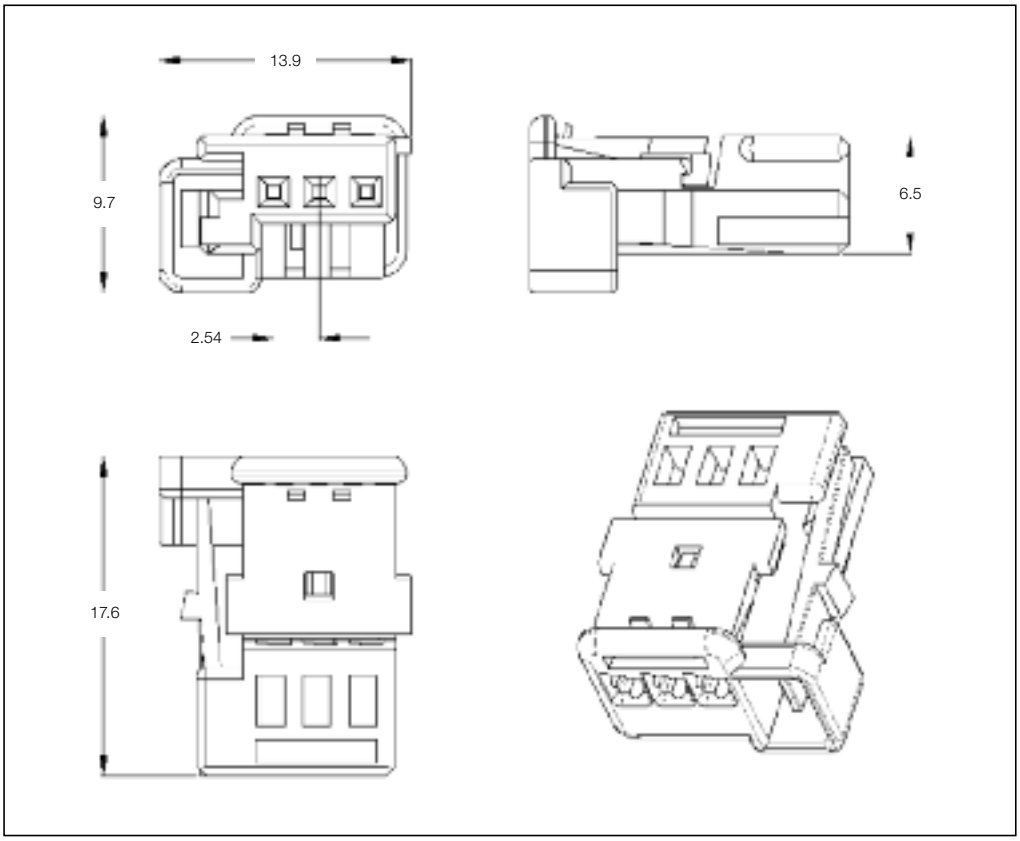

3 Position Receptacle Housings

No. of Pos.	Keying Options	Housing Color	Part Numbers							
			Receptacle Housing	Cover	Locking Device	Cover and Lever	Retainer Housing	Mating Pin Housing	Mating PCB Header Right-Angle	Mating PCB Header Vertical
3	–	Black	953697-1	–	–	–	–	953698-1	–	–
		White	953697-2					953698-2		
		Blue	953697-3					953698-3		
		Yellow	953697-4					953698-4		
		Gray	953697-5					953698-5		
		Brown	953697-6					953698-6		

Mating Pin Housing
See Page 3-9

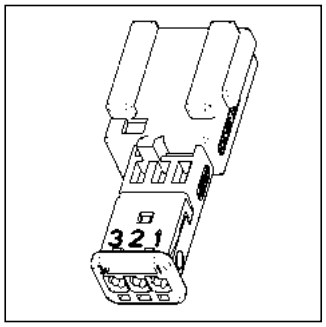

All specifications subject to change. Consult TE Connectivity for latest specifications.

Receptacle Housings

Technical Features

No. of Positions:
3 Positions

Housing Material:
PBT GF10

Wire Size Range:
0.20–0.75 mm²

Product Specification:
108-18590-0

Application Specification:
114-18225

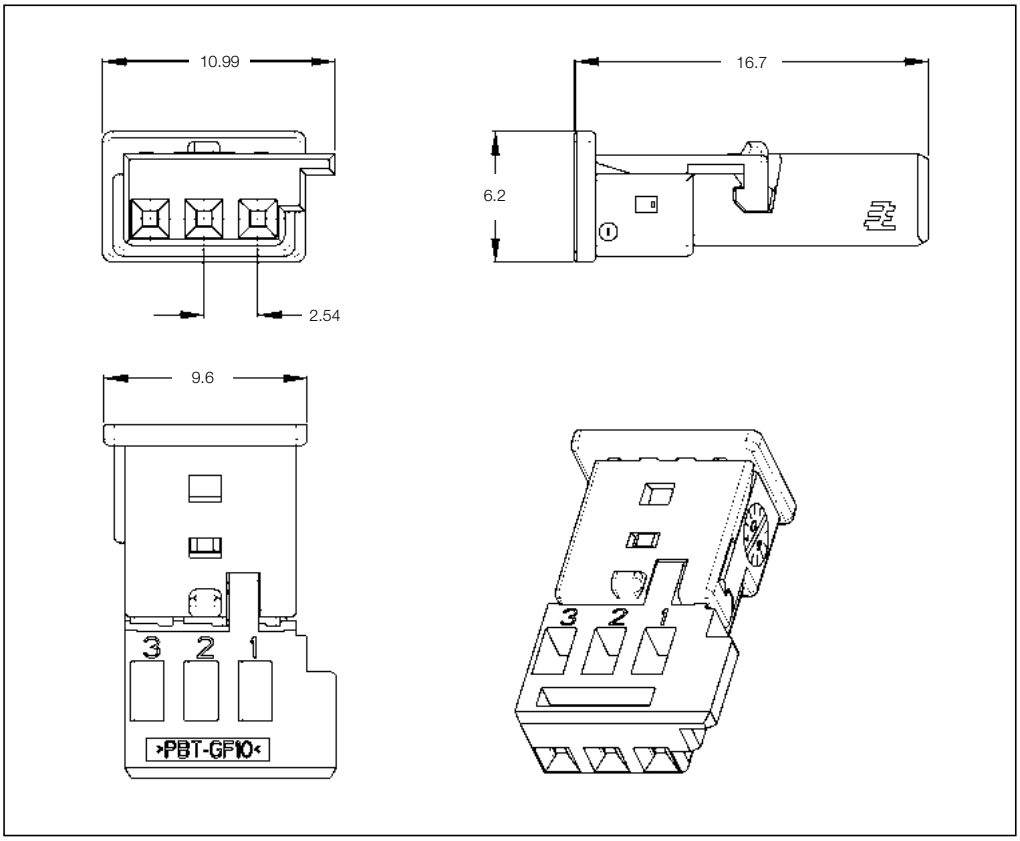

3 Position Receptacle Housings

No. of Pos.	Keying Options	Housing Color	Part Numbers						
			Receptacle Housing	Cover	Lever	Retainer Housing	Mating Pin Housing	Mating PCB Header Right-Angle	Mating PCB Header Vertical
3	A	Black	1-1718346-1	–	–	–	1-968700-1	967279-1	–
	B	Natural	2-1718346-1				2-968700-1	–	
	C	Light Blue	3-1718346-1				3-968700-1	–	
	D	Violet	4-1718346-1				–	967279-4	
	Z	Water Blue	9-1718346-1				–	–	
	A	Ivory	1-1718346-3				–	–	

Mating Pin Housing
See Page 3-11

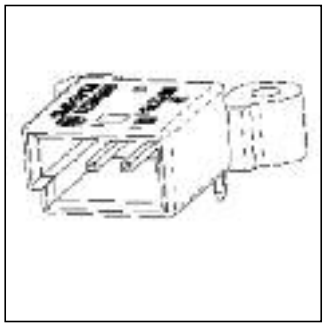

Mating Header
See Page 3-10

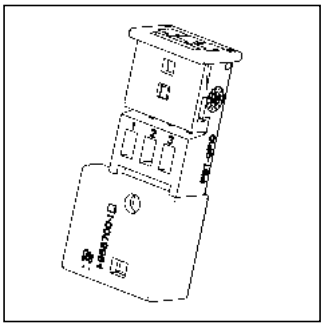

Receptacle Housings

Technical Features

No. of Positions:
3 Positions

Housing Material:
PBT GF10

Wire Size Range:
0.20–0.75 mm^2

Product Specification:
—

Application Specification:
—

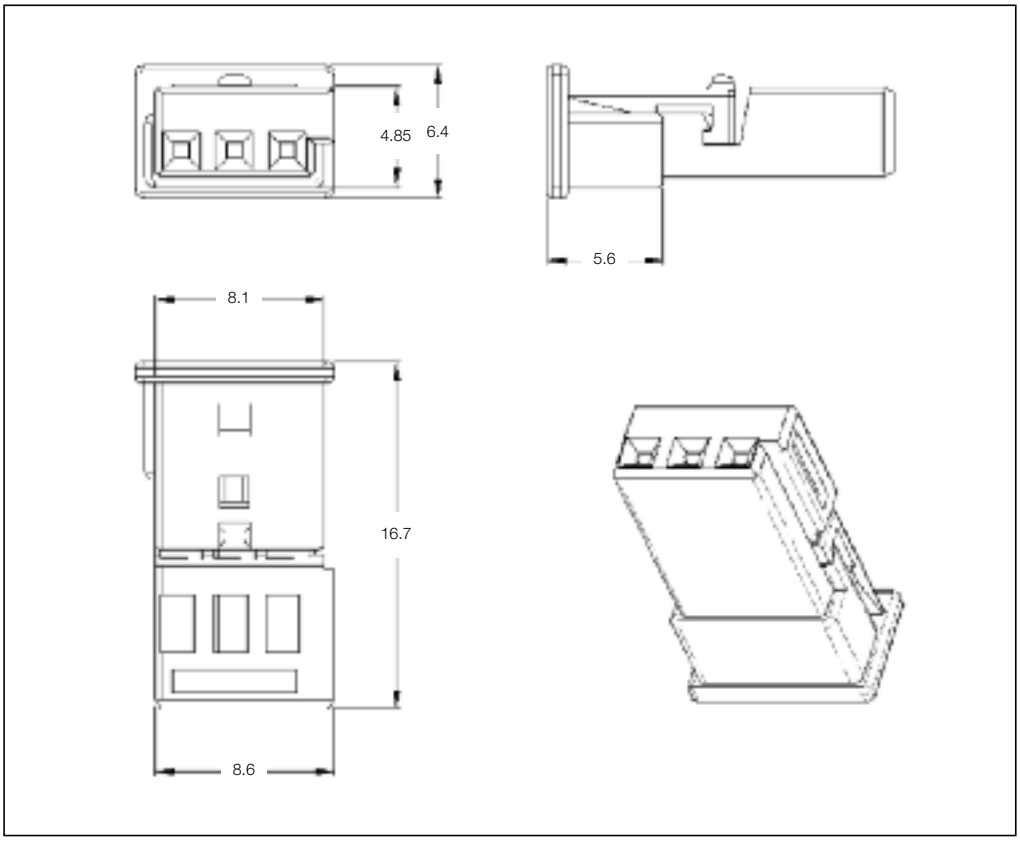

3 Position Receptacle Housings

No. of Pos.	Keying Options	Housing Color	Part Numbers						
			Receptacle Housing	Cover	Lever	Retainer Housing	Mating Pin Housing	Mating PCB Header Right-Angle	Mating PCB Header Vertical
3	A	Natural	1743164-1	–	–	–	–	–	–
	B	Black	1743164-2						

All specifications subject to change. Consult TE Connectivity for latest specifications.

Pin Housings

Technical Features

No. of Positions:
3 Positions

Housing Material:
PBT GF20

Wire Size Range:
0.20–0.75 mm^2

Product Specification:
108-15236

Application Specification:
411-15526

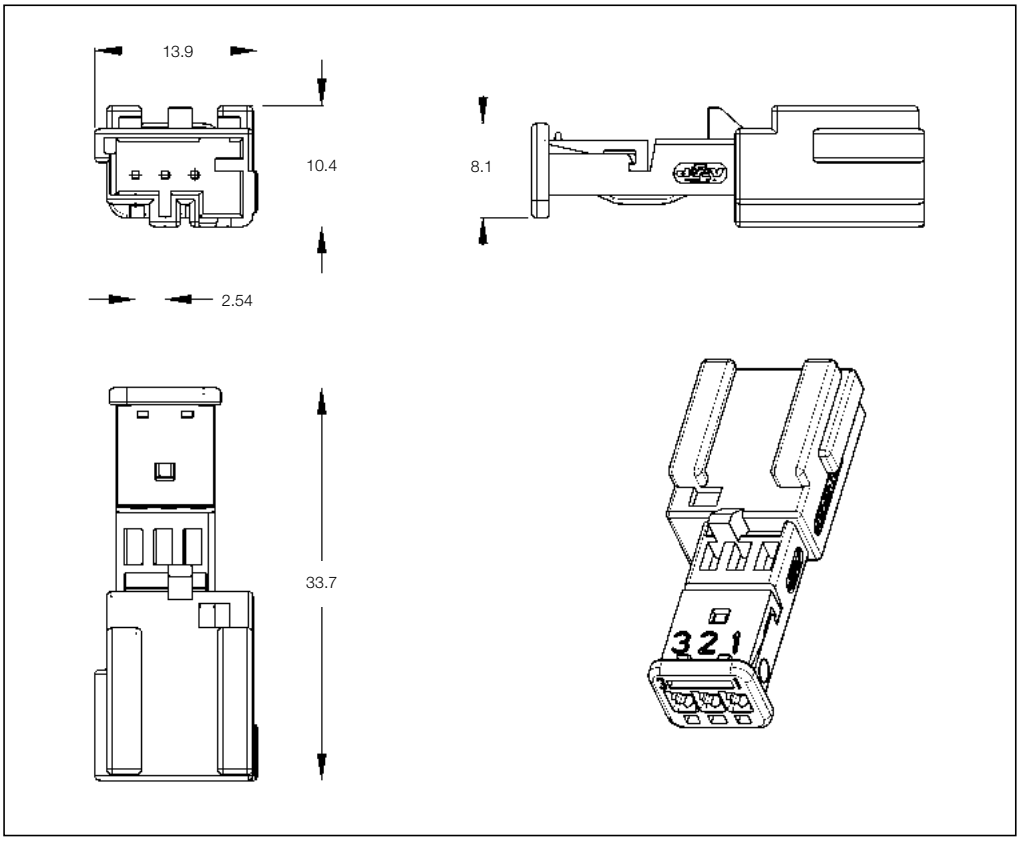

3 Position Pin Housings

No. of Pos.	Keying Options	Housing Color	Part Numbers					
			Pin Housing	Cover	Locking Device	Cover and Lever	Retainer Housing	Mating Receptacle Housing
3	–	Black	953698-1	–	–	–	–	953697-1
		White	953698-2					953697-2
		Blue	953698-3					953697-3
		Yellow	953698-4					953697-4
		Gray	953698-5					953697-5
		Brown	953698-6					953697-6

Mating Receptacle Housing
See Page 3-6

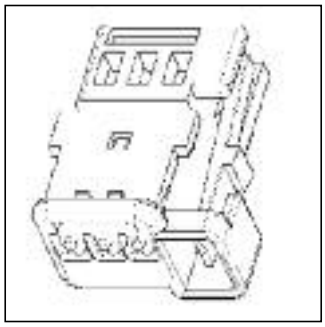

Pin Housings

Technical Features

No. of Positions:
3 Positions

Housing Material:
PBT GF10

Wire Size Range:
0.20–0.75 mm²

Product Specification:
108-18590-0

Application Specification:
114-18225

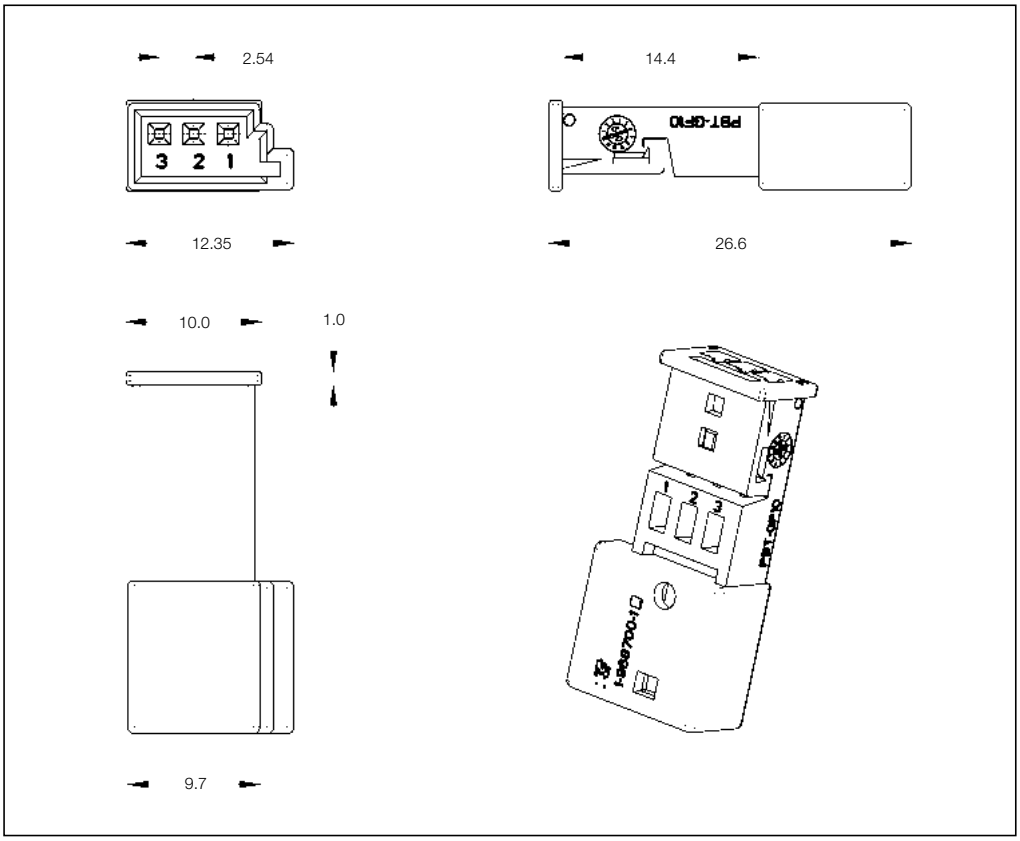

3 Position Pin Housings

No. of Pos.	Keying Options	Housing Color	Part Numbers					
			Pin Housing	Cover	Locking Device	Cover and Lever	Retainer Housing	Mating Receptacle Housing
3	A	Black	1-968700-1	–	–	–	–	1-1718346-1
	B	Natural	2-968700-1					2-1718346-1
	C	Blue	3-968700-1					3-1718346-1

Mating Receptacle Housing
See Page 3-7

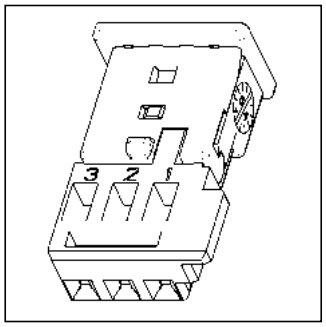

All specifications subject to change. Consult TE Connectivity for latest specifications.

Printed Circuit Board Headers

Technical Features

No. of Positions:
3 Positions

Housing Material:
PA66 GF15

Material and Finish:
CuFe2, tin plated

Product Specification:
—

Application Specification:
—

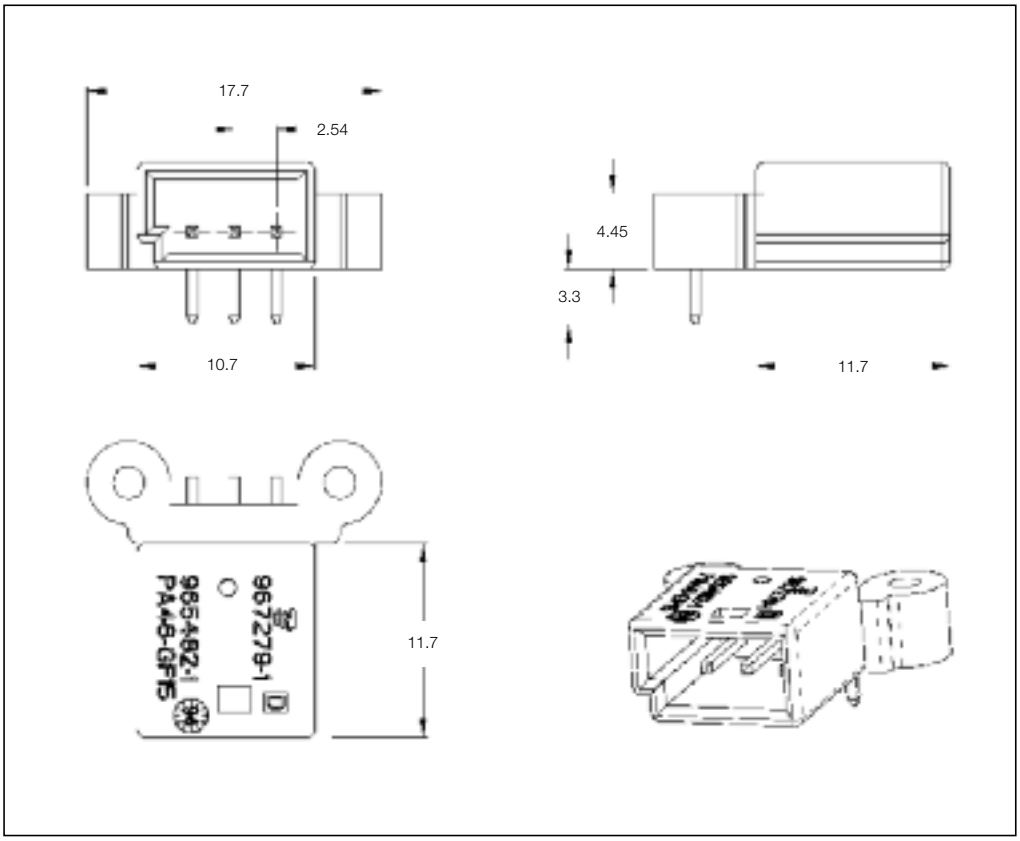

3 Position PCB Header

No. of Pos.	Keying Options	Housing Color	Part Numbers					
			PCB Header Right-Angle	PCB Header Vertical	Cover	Cover and Lever	Retainer Housing	Mating Receptacle Housing
3	A	Black	967279-1	–	–	–	–	1-1718346-1
	D	Black	967279-4	–	–	–	–	4-1718346-1

Mating Receptacle Housing
See Page 3-7

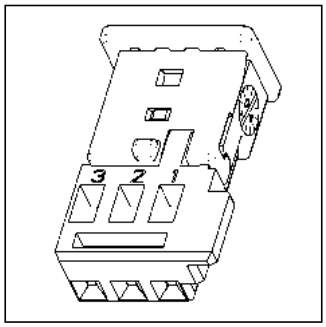

Printed Circuit Board Headers

Technical Features

No. of Positions:
3 Positions

Housing Material:
PBT CV 15%

Material and Finish:
CuSn, post tin plated

Product Specification:
108-15156

Application Specification:
411-15579

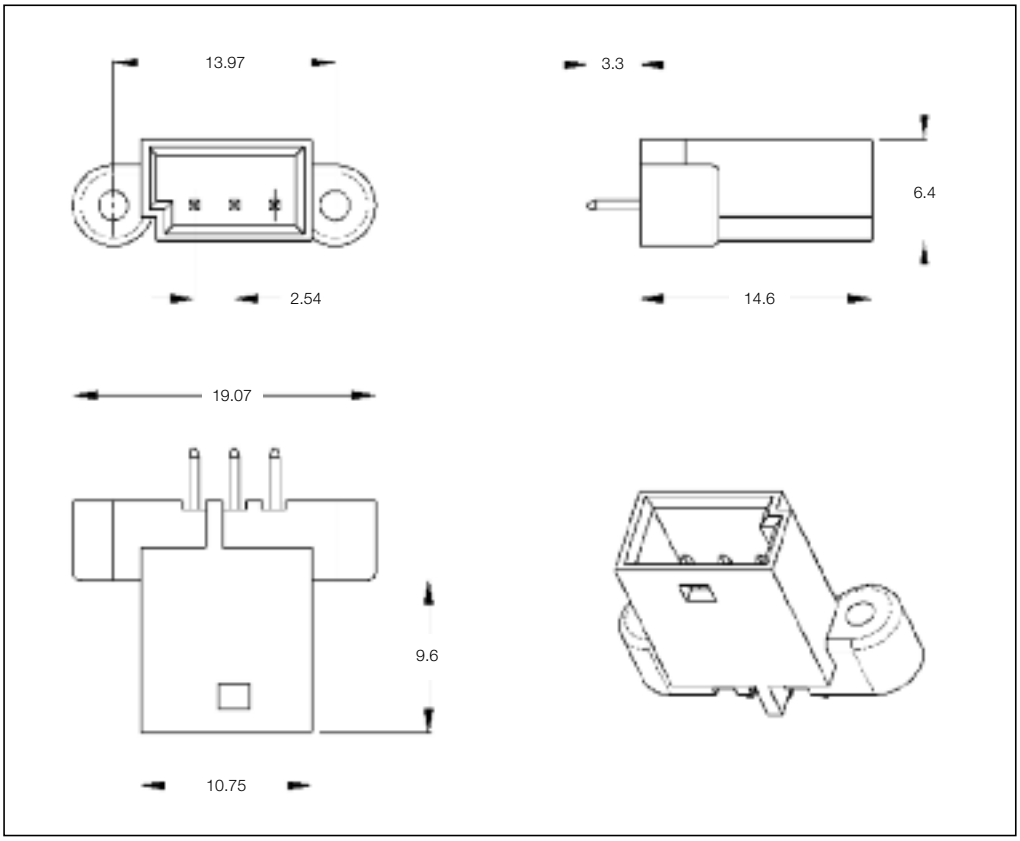

3 Position PCB Header

No. of Pos.	Keying Options	Housing Color	Part Numbers					
			PCB Header Right-Angle	PCB Header Vertical	Cover	Cover and Lever	Retainer Housing	Mating Counter Part
3	–	Black	–	185730-1	–	–	–	185309-1

Mating Receptacle Housing
See Page 3-5

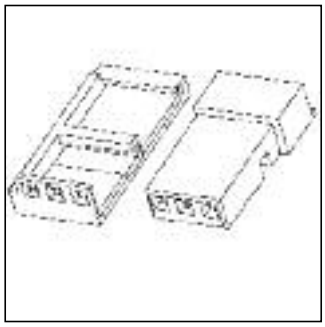

All specifications subject to change. Consult TE Connectivity for latest specifications.

Printed Circuit Board Headers

Technical Features

No. of Positions:
3 Position Assembly

Housing Material:
PBT GF20

Material and Finish:
CuSn, pre-tin plated

Product Specification:
108-18030

Application Specification:
114-18021

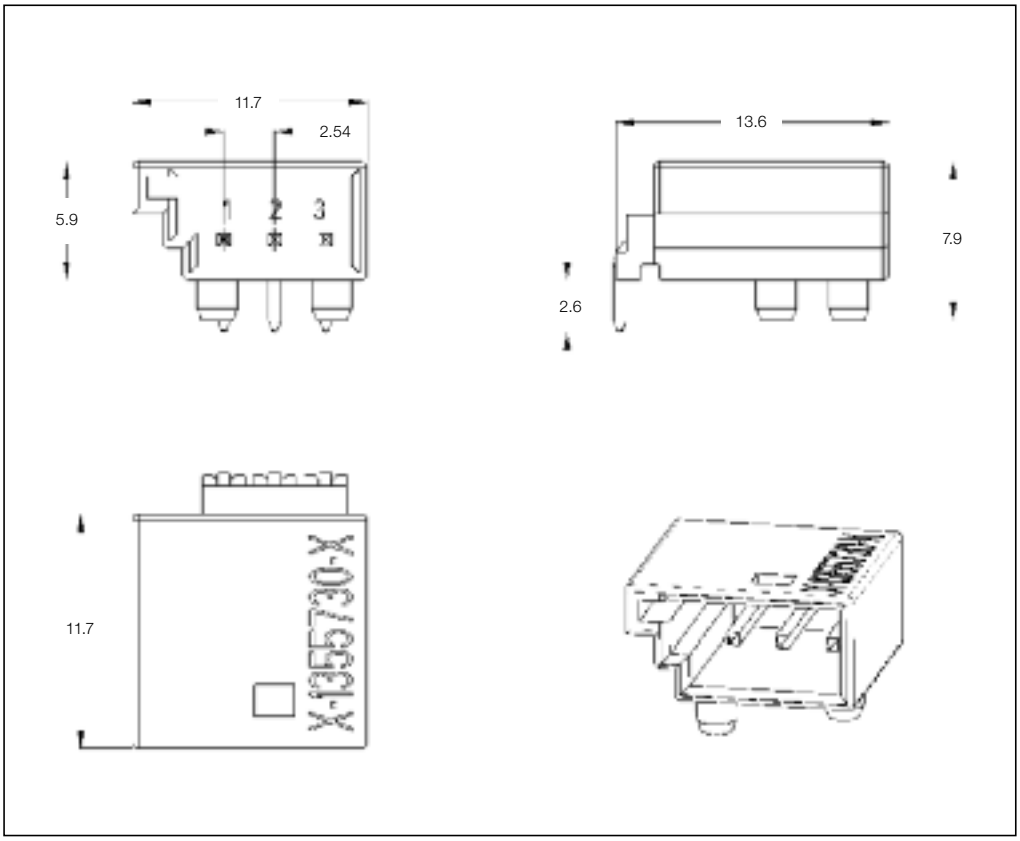

3 Position PCB Header

No. of Pos.	Keying Options	Housing Color	Part Numbers					
			PCB Header Right-Angle	PCB Header Vertical	Cover	Cover and Lever	Retainer Housing	Mating Receptacle Housing
3	E	Black	5-1355730-1	–	–	–	–	–

Printed Circuit Board Headers

Technical Features

No. of Positions:
3 Position Assembly

Housing Material:
PBT GF15

Material and Finish:
CuSn, tin plated

Product Specification:
108-61038

Application Specification:
114-18021

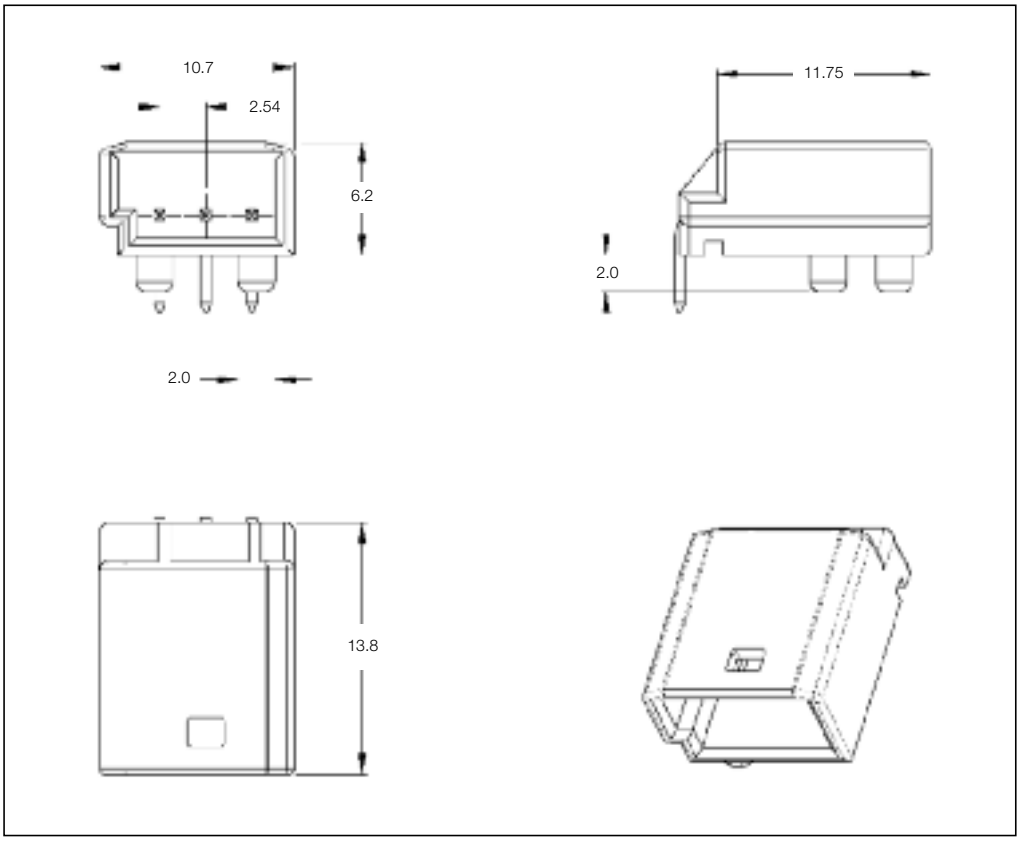

3 Position PCB Header

No. of Pos.	Keying Options	Housing Color	Part Numbers					
			PCB Header Right-Angle	PCB Header Vertical	Cover	Cover and Lever	Retainer Housing	Mating Receptacle Housing
3	–	Black	368312-1	–	–	–	–	–

All specifications subject to change. Consult TE Connectivity for latest specifications.

Printed Circuit Board Headers

Technical Features

No. of Positions:
3 Positions

Housing Material:
PBT GF15

Material and Finish:
Bronze, tinned

Product Specification:
108-15267

Application Specification:
411-15635

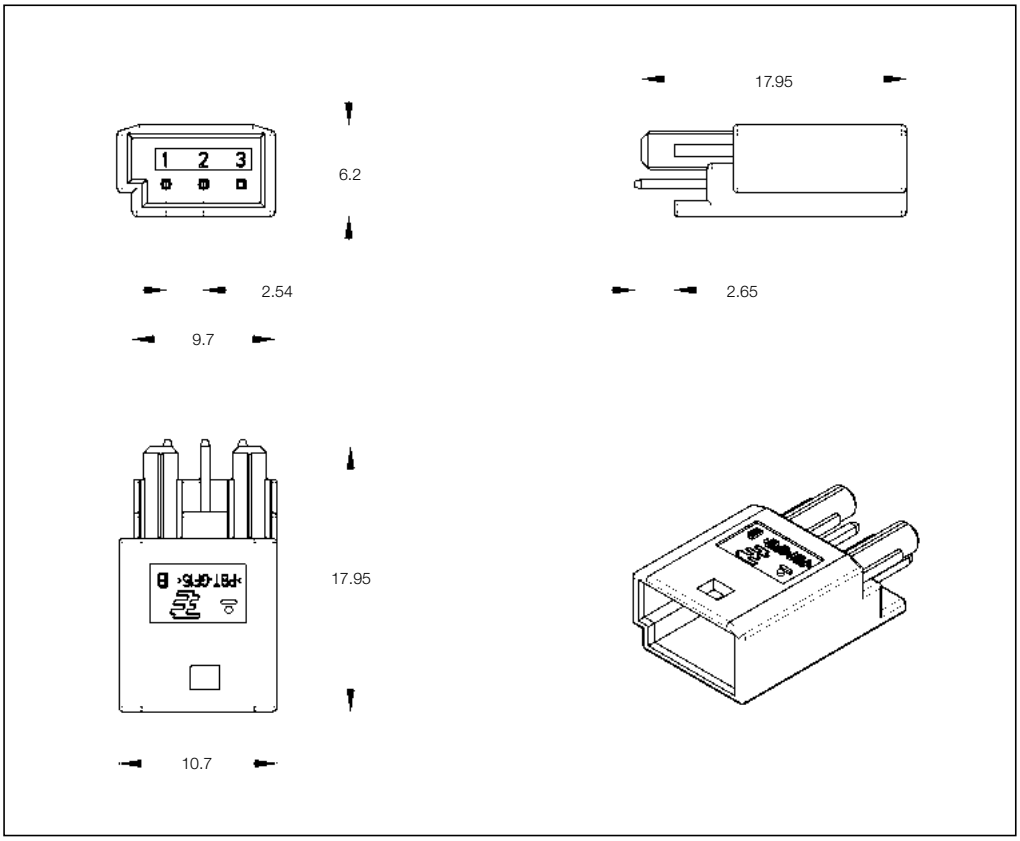

3 Position PCB Header

No. of Pos.	Keying Options	Housing Color	Part Numbers					
			PCB Header Right-Angle	PCB Header Vertical	Cover	Lever	Retainer Housing	Mating Receptacle Housing
3	–	Natural	–	1743156-1	–	–	–	–
		Black	–	1743156-2				

Receptacle Housings

Technical Features

No. of Positions:
4 Position Assembly

Housing Material:
PBT GF15

Wire Size Range:
0.20–0.75 mm^2

Product Specification:
108-18030

Application Specification:
114-18021

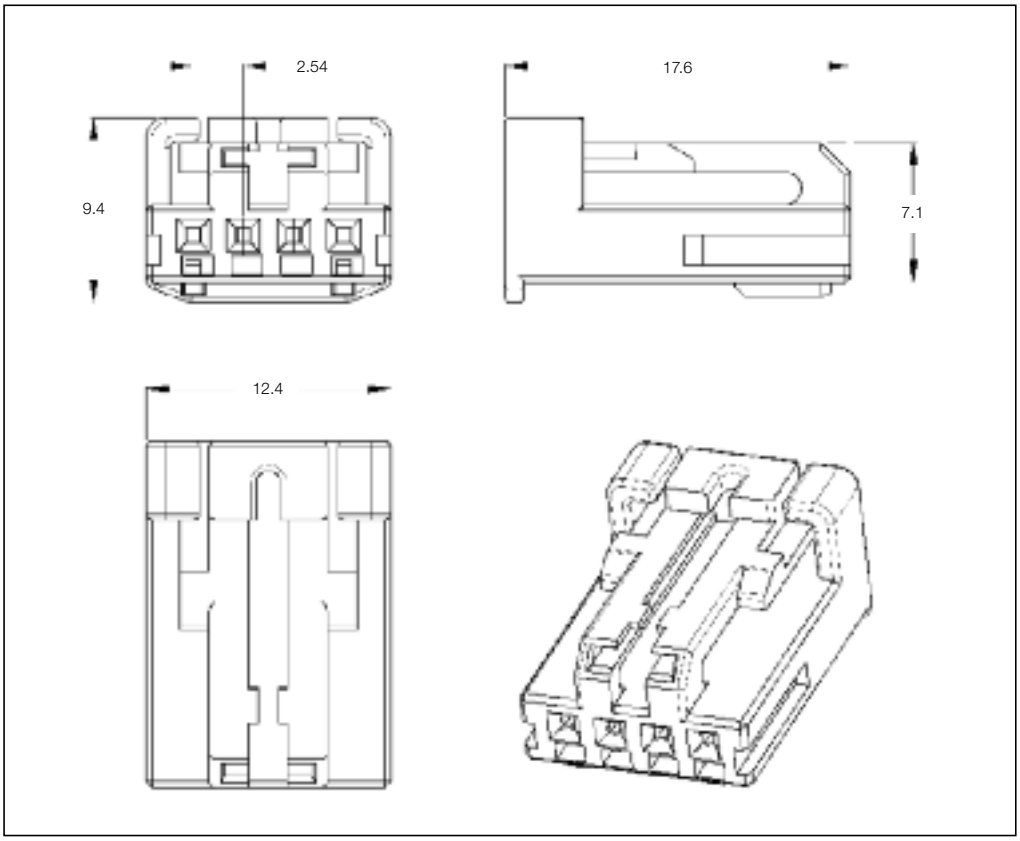

4 Position Receptacle Housings

No. of Pos.	Keying Options	Housing Color	Part Numbers							
			Receptacle Housing	Cover	Locking Device	Cover and Lever	Retainer Housing	Mating Pin Housing	Mating PCB Header Right-Angle	Mating PCB Header Vertical
4	–	Black	936119-1	–	–	–	–	936121-1	–	936399-1
		Yellow	936119-2	–	–	–	–	936121-2	–	936399-5

Mating Pin Housing
See Page 3-22

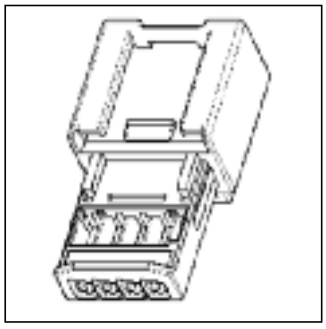

Mating Header
See Page 3-25

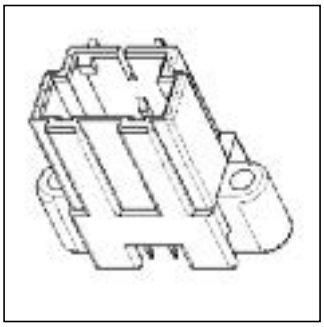

All specifications subject to change. Consult TE Connectivity for latest specifications.

Receptacle Housings

Technical Features

No. of Positions:
4 Positions

Housing Material:
PBT GF10

Wire Size Range:
0.14–0.75 mm^2

Product Specification:
108-18924

Application Specification:
114-18630

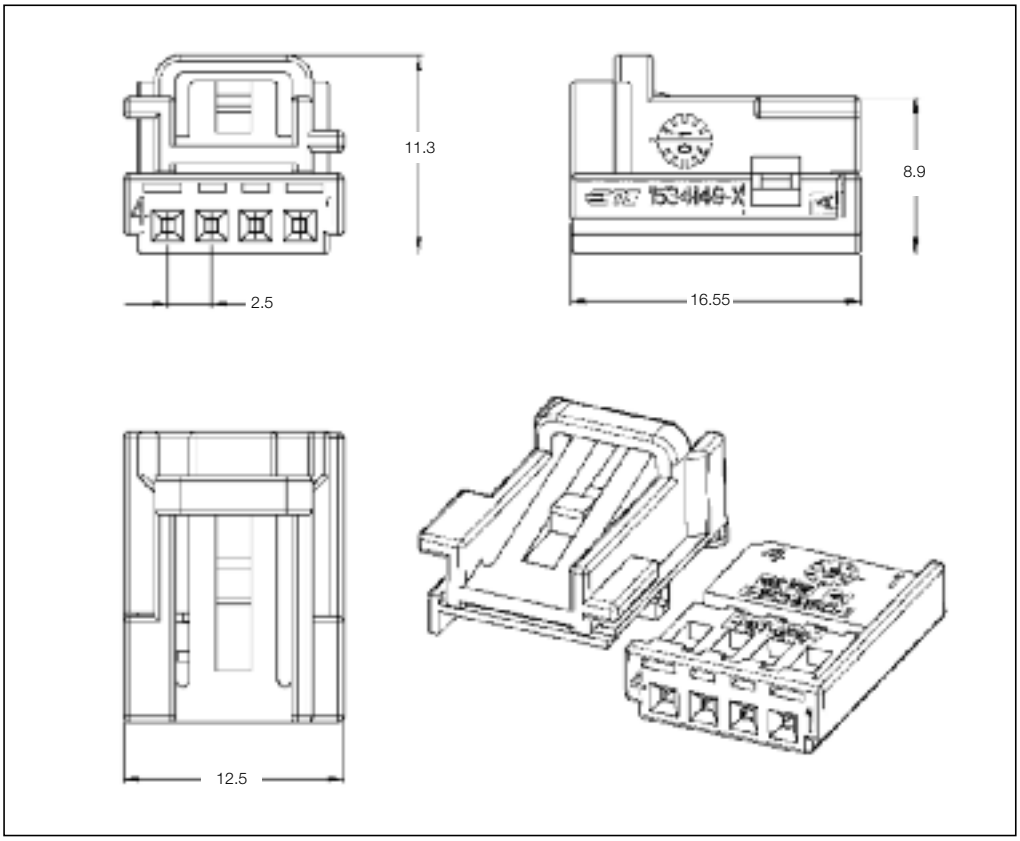

4 Position Receptacle Housings

No. of Pos.	Keying Options	Housing Color	Part Numbers							
			Receptacle Housing	Cover	Locking Device	Cover and Lever	Retainer Housing	Mating Pin Housing	Mating PCB Header Right-Angle	Mating PCB Header Vertical
4	–	Black	1-1534150-1	–	–	–	1534149-1	1-1534157-1 & 1534131-1	–	–

Mating Pin Housing
See Page 3-23

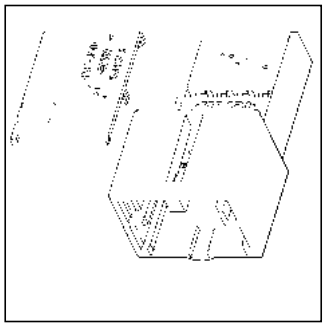

Receptacle Housings

Technical Features

No. of Positions:
4 Positions

Housing Material:
PBT GF10

Wire Size Range:
0.20–0.75 mm^2

Product Specification:
—

Application Specification:
—

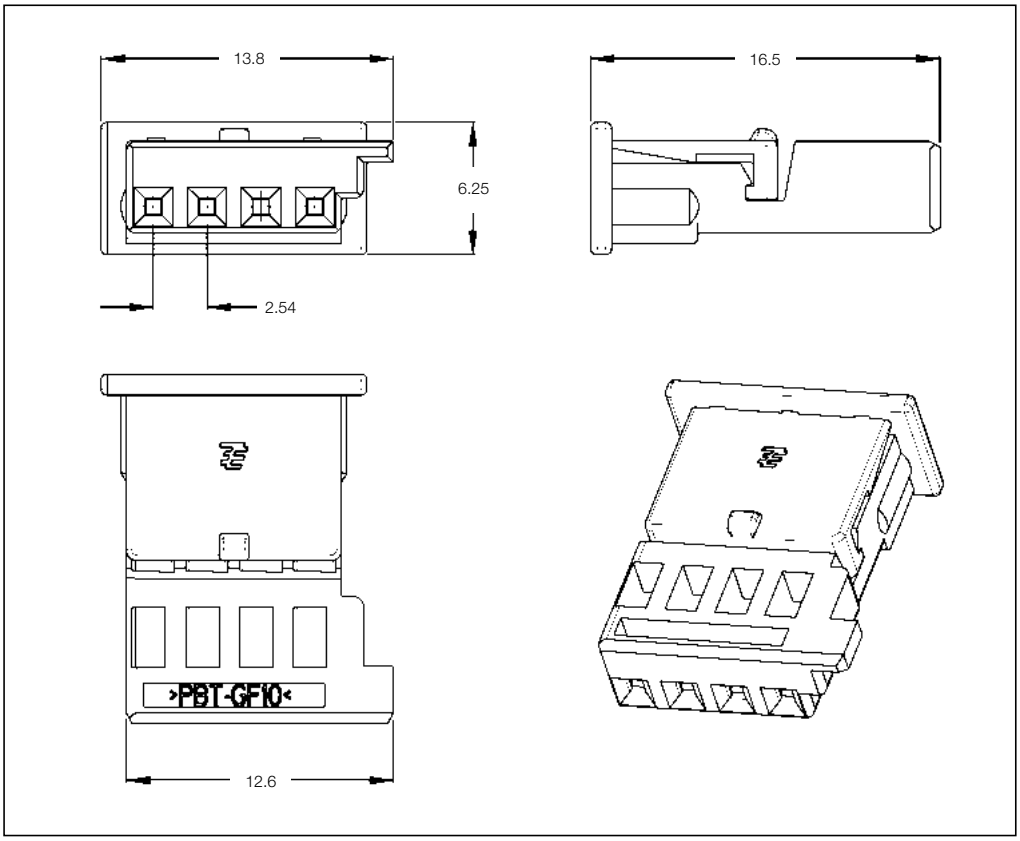

4 Position Receptacle Housings

No. of Pos.	Keying Options	Housing Color	Part Numbers						
			Receptacle Housing	Cover	Lever	Retainer Housing	Mating Pin Housing	Mating PCB Header Right-Angle	Mating PCB Header Vertical
4	C	Blue	3-1355397-3	–	–	–	3-968696-2 4-968696-3	–	–
	E	Green	5-1355397-3						

Mating Pin Housing
See Page 3-21

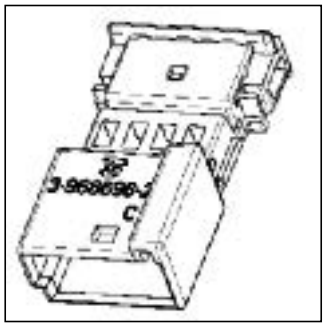

All specifications subject to change. Consult TE Connectivity for latest specifications.

Receptacle Housings

Technical Features

No. of Positions:
4 Positions

Housing Material:
PA66

Wire Size Range:
0.20–0.75 mm^2

Product Specification:
108-18597-1

Application Specification:
114-18223-1

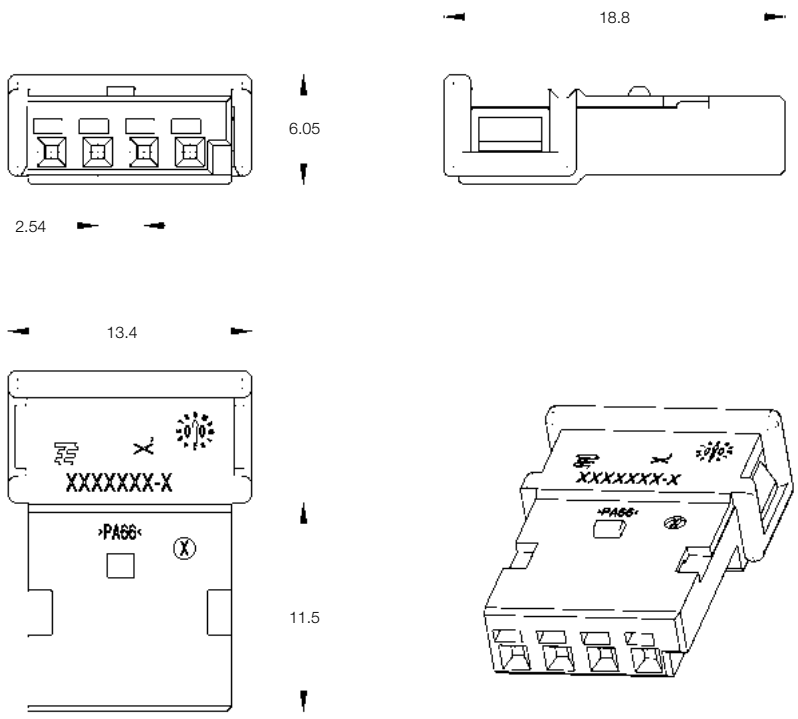

4 Position Receptacle Housings

No. of Pos.	Keying Options	Housing Color	Part Numbers							
			Receptacle Housing	Cover	Locking Device	Cover and Lever	Retainer Housing	Mating Pin Housing	Mating PCB Header Right-Angle	Mating PCB Header Vertical
4	Z	Black	1241634-1	–	–	–	–	–	–	–
	B	Black	1241634-2							
	C	Black	1241634-3							

Receptacle Housings

Technical Features

No. of Positions:
4 Positions
(Positive Mate Locking)

Housing Material:
PBT GF20

Wire Size Range:
0.35–0.75 mm^2

Product Specification:
108-15236

Application Specification:
411-15635

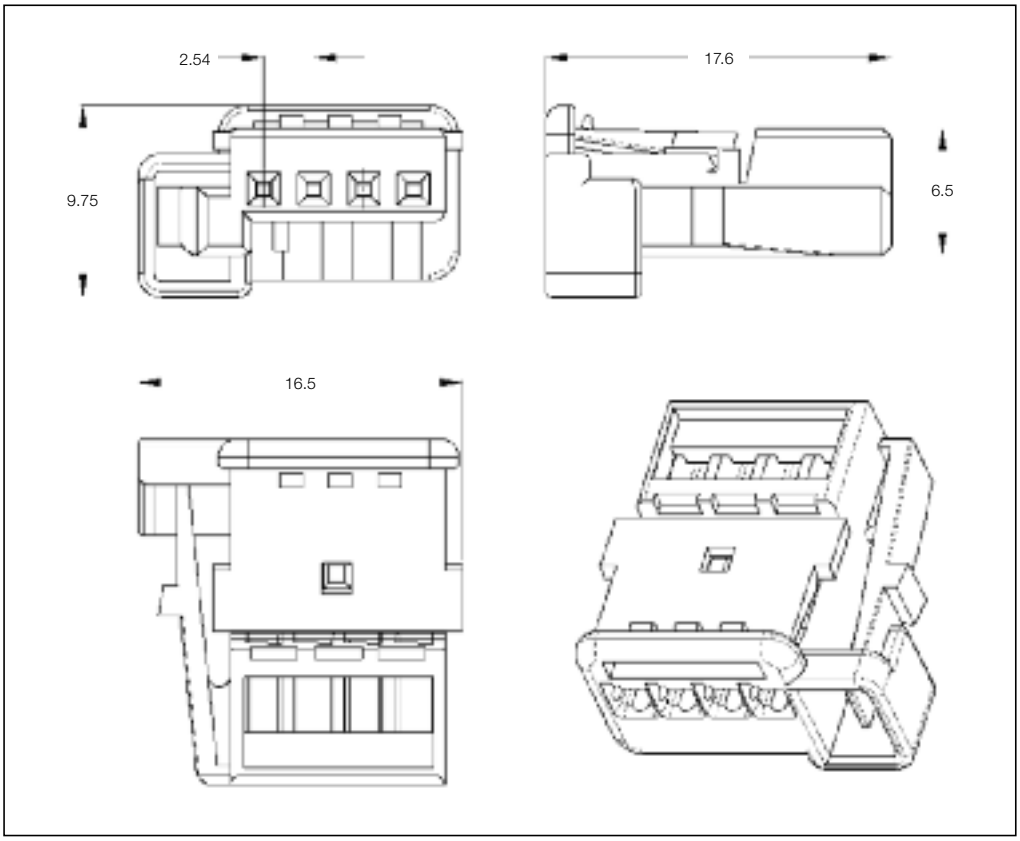

4 Position Receptacle Housings

No. of Pos.	Keying Options	Housing Color	Part Numbers							
			Receptacle Housing	Cover	Locking Device	Cover and Lever	Retainer Housing	Mating Pin Housing	Mating PCB Header Right-Angle	Mating PCB Header Vertical
4	–	Black	1379029-1	–	–	–	–	–	–	–
		White	1379029-2							
		Blue	1379029-3							
		Yellow	1379029-4							
		Gray	1379029-5							
		Brown	1379029-6							

All specifications subject to change. Consult TE Connectivity for latest specifications.

Pin Housings

Technical Features

No. of Positions:
4 Positions

Housing Material:
PBT GF10

Wire Size Range:
0.20–0.75 mm^2

Product Specification:
108-18510-1

Application Specification:
114-18166-1

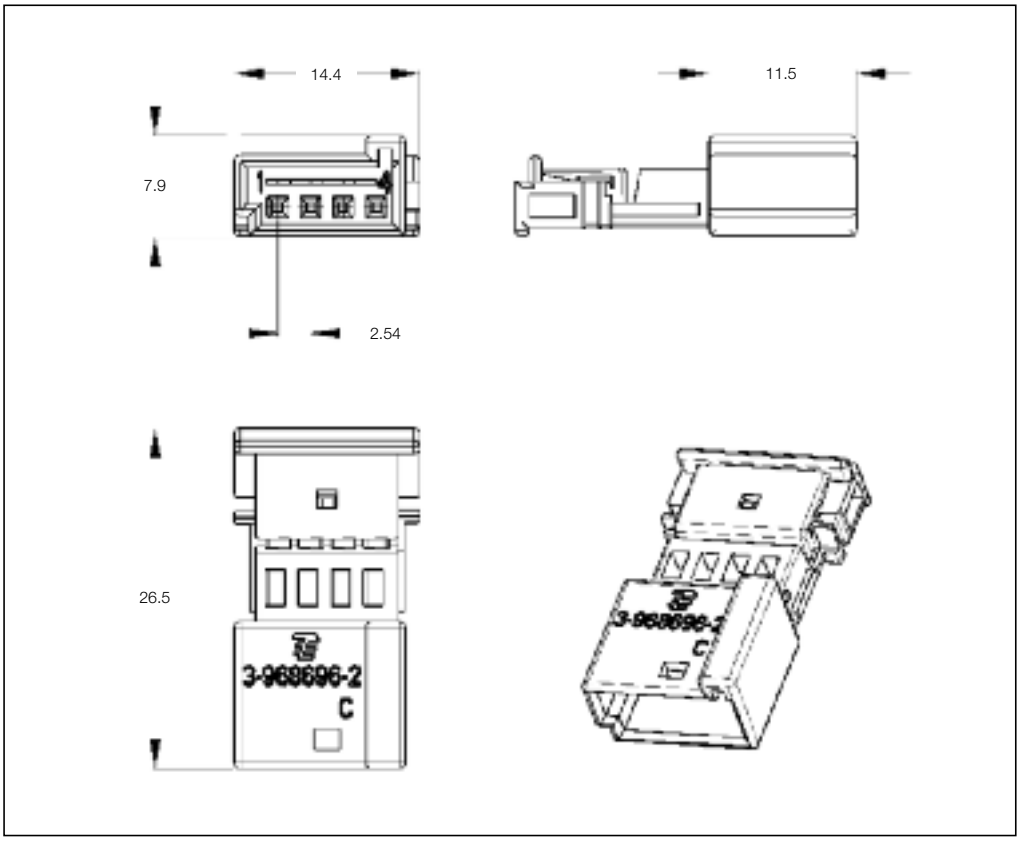

4 Position Pin Housing

No. of Pos.	Keying Options	Housing Color	Part Numbers				
			Pin Housing	Cover	Lever	Retainer Housing	Mating Receptacle Housing
4	A	Black	1-968696-3	–	–	–	–
4	B	Nature	2-968696-3	–	–	–	–
4	C	Blue	3-968696-2	–	–	–	3-1355397-3
4	D	Violet	4-968696-3	–	–	–	–
4	E	Green	5-968696-3	–	–	–	5-1355397-3

Mating Receptacle Housing
See Page 3-18

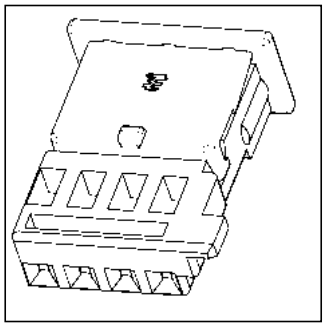

Pin Housings

Technical Features

No. of Positions:
4 Positions

Housing Material:
PBT GF15

Wire Size Range:
0.25–0.75 mm^2

Product Specification:
108-18030

Application Specification:
114-18021

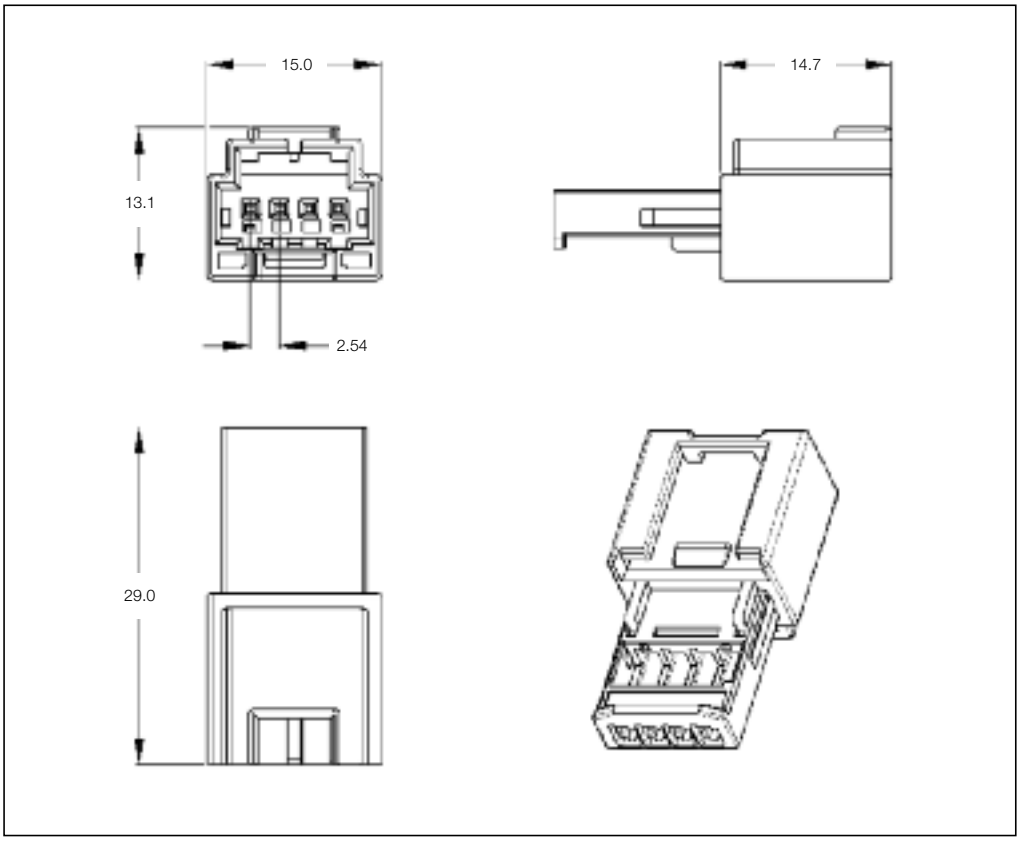

4 Position Pin Housings

No. of Pos.	Keying Options	Housing Color	Part Numbers					
			Pin Housing	Cover	Locking Device	Cover and Lever	Retainer Housing	Mating Receptacle Housing
4	–	Black	936121-1	–	–	–	–	936119-1
		Yellow	936121-2	–	–	–	–	936119-2

Mating Receptacle Housing
See Page 3-16

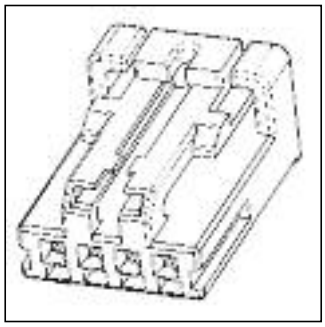

All specifications subject to change. Consult TE Connectivity for latest specifications.

Pin Housings

Technical Features

No. of Positions:
4 Positions

Housing Material:
PBT GF10

Wire Size Range:
0.14–0.75 mm^2

Product Specification:
108-18924

Application Specification:
114-18630

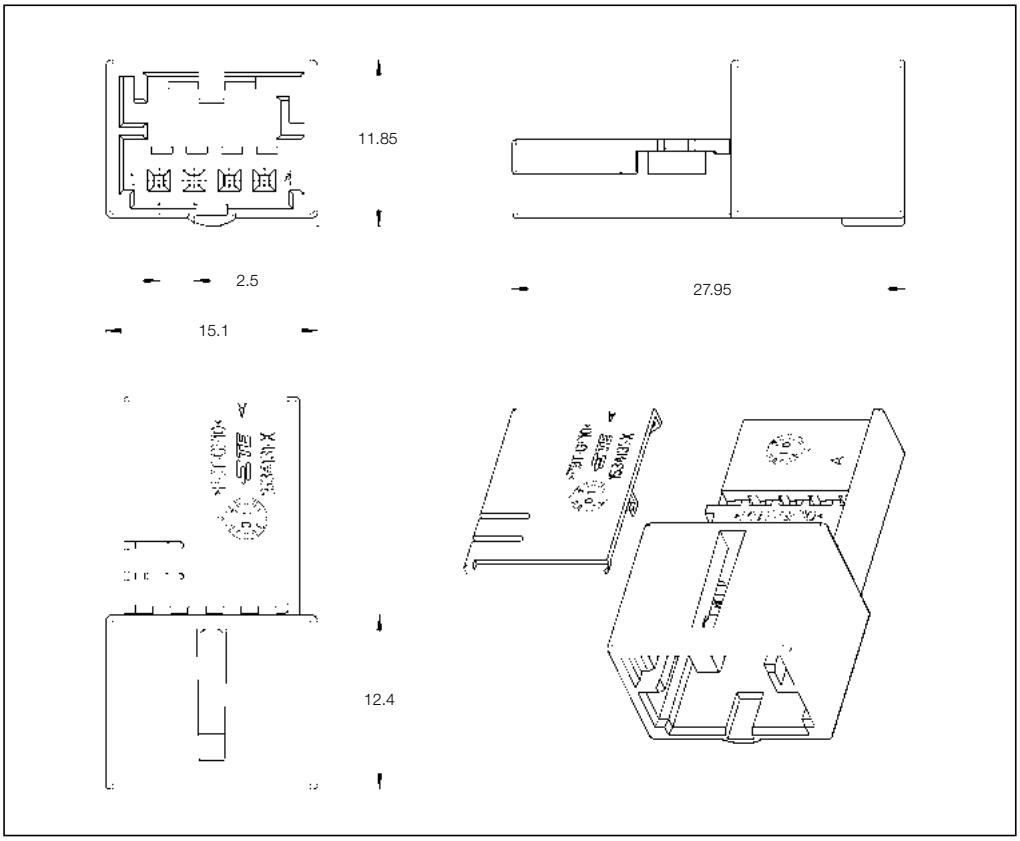

4 Position Pin Housing

No. of Pos.	Keying Options	Housing Color	Part Numbers					
			Pin Housing	Cover	Locking Device	Cover and Lever	Retainer Housing	Mating Receptacle Housing
4	–	Black	1-1534157-1	–	–	–	1534131-1	1-1534150-1 & 1534149-1

Mating Receptacle Housing
See Page 3-17

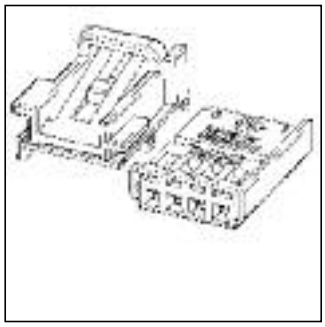

Pin Housings

3

Technical Features

No. of Positions:
4 Positions

Housing Material:
PBT GF15

Wire Size Range:
0.20–0.75 mm^2

Product Specification:
—

Application Specification:
—

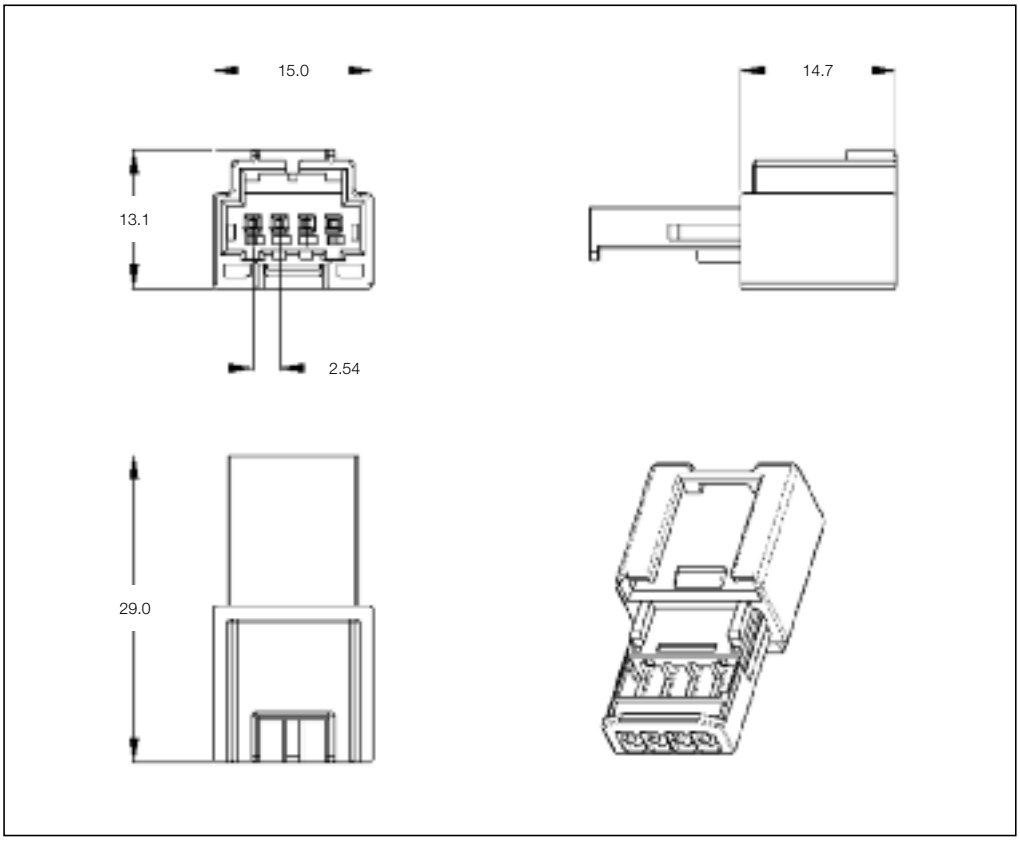

4 Position Pin Housings

No. of Pos.	Keying Options	Housing Color	Part Numbers				
			Pin Housing	Cover	Lever	Retainer Housing	Mating Receptacle Housing
4	–	Black	936121-1	–	–	–	–
		Yellow	936121-2				

All specifications subject to change. Consult TE Connectivity for latest specifications.

Printed Circuit Board Headers

Technical Features

No. of Positions:
4 Position Assembly

Housing Material:
PBT GF20

Material and Finish:
CuZn, tin plated

Product Specification:
108-18030

Application Specification:
114-18021

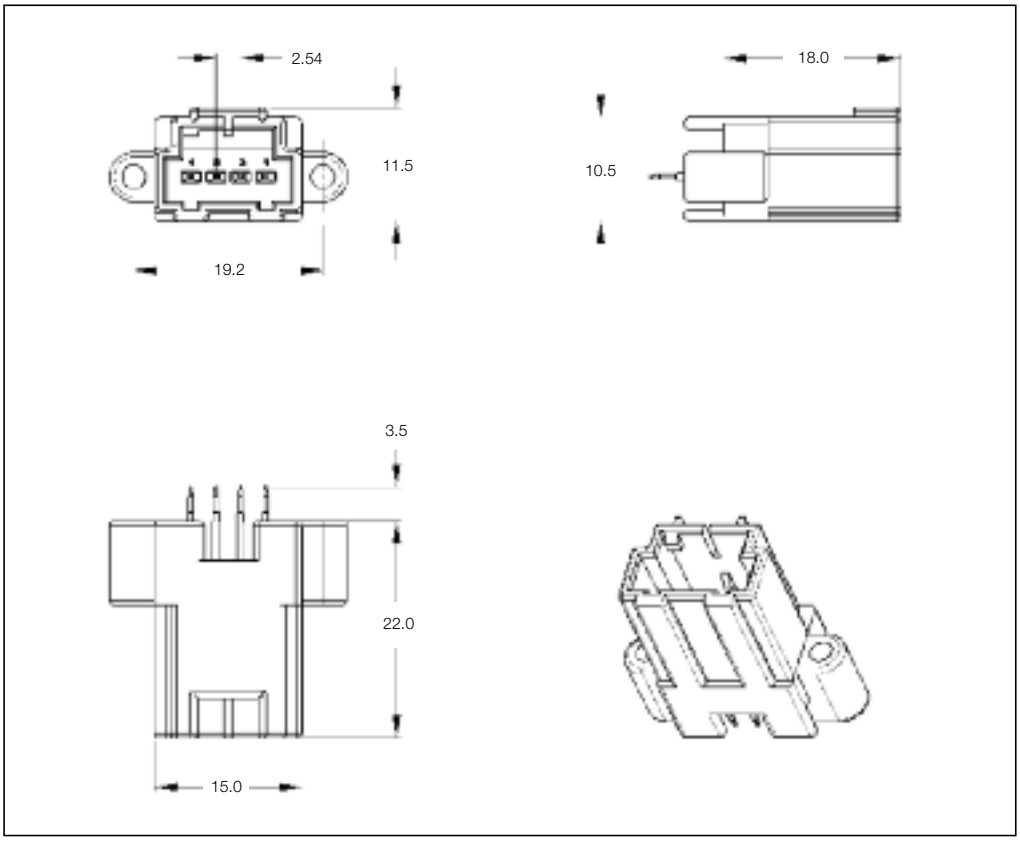

4 Position PCB Header

No. of Pos.	Keying Options	Housing Color	Part Numbers					
			PCB Header Right-Angle	PCB Header Vertical	Cover	Cover and Lever	Retainer Housing	Mating Receptacle Housing
4	–	Natural	–	936399-1	–	–	–	936119-1
		Yellow	–	936399-5	–	–	–	936119-2 1-936119-2

Mating Receptacle Housing
See Page 3-16

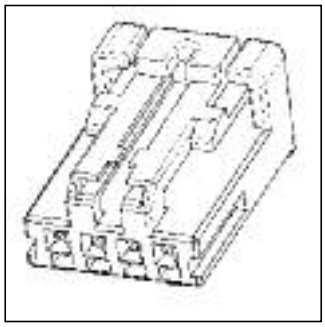

Printed Circuit Board Headers

Technical Features

No. of Positions:
4 Positions

Housing Material:
PBT GF15

Wire Size Range:
0.20–0.75 mm^2

Product Specification:
—

Application Specification:
—

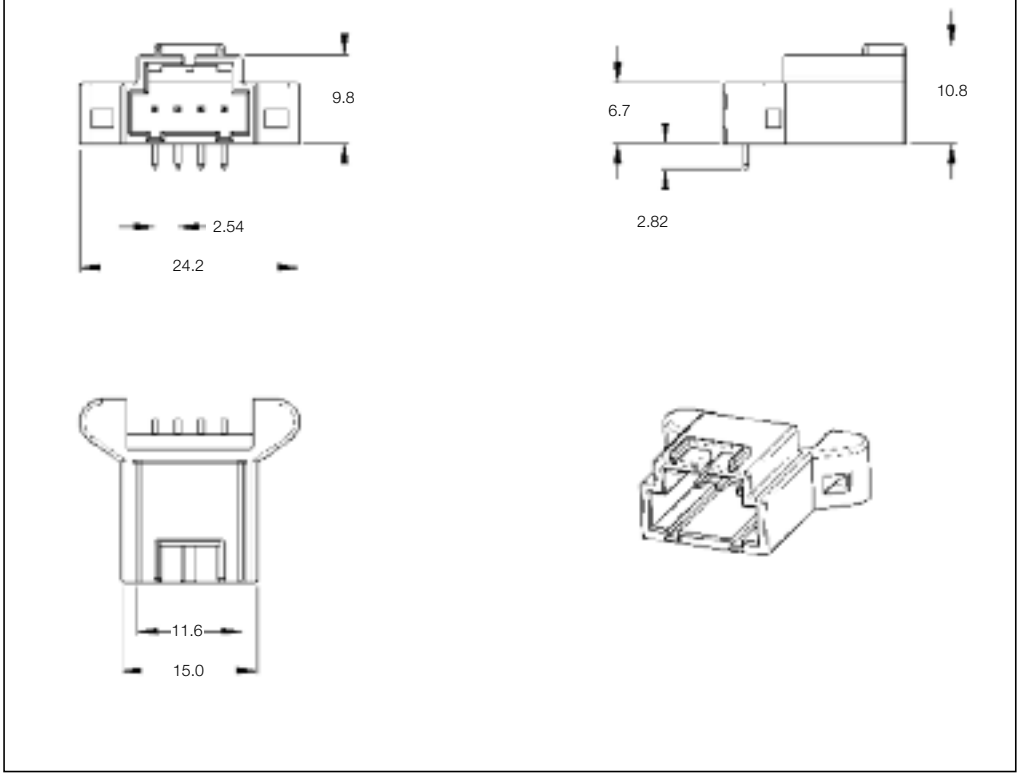

4 Position Pin Housings

No. of Pos.	Keying Options	Housing Color	Part Numbers				
			Pin Housing	Cover	Lever	Retainer Housing	Mating Receptacle Housing
4	–	Yellow	1743218-5	–	–	–	–
		Dark Gray	1-1743218-3				

All specifications subject to change. Consult TE Connectivity for latest specifications.

Printed Circuit Board Headers

Technical Features

No. of Positions:
4 Positions

Housing Material:
PCT GF30

Material and Finish:
CuSn6

Product Specification:
108-15267

Application Specification:
411-15635

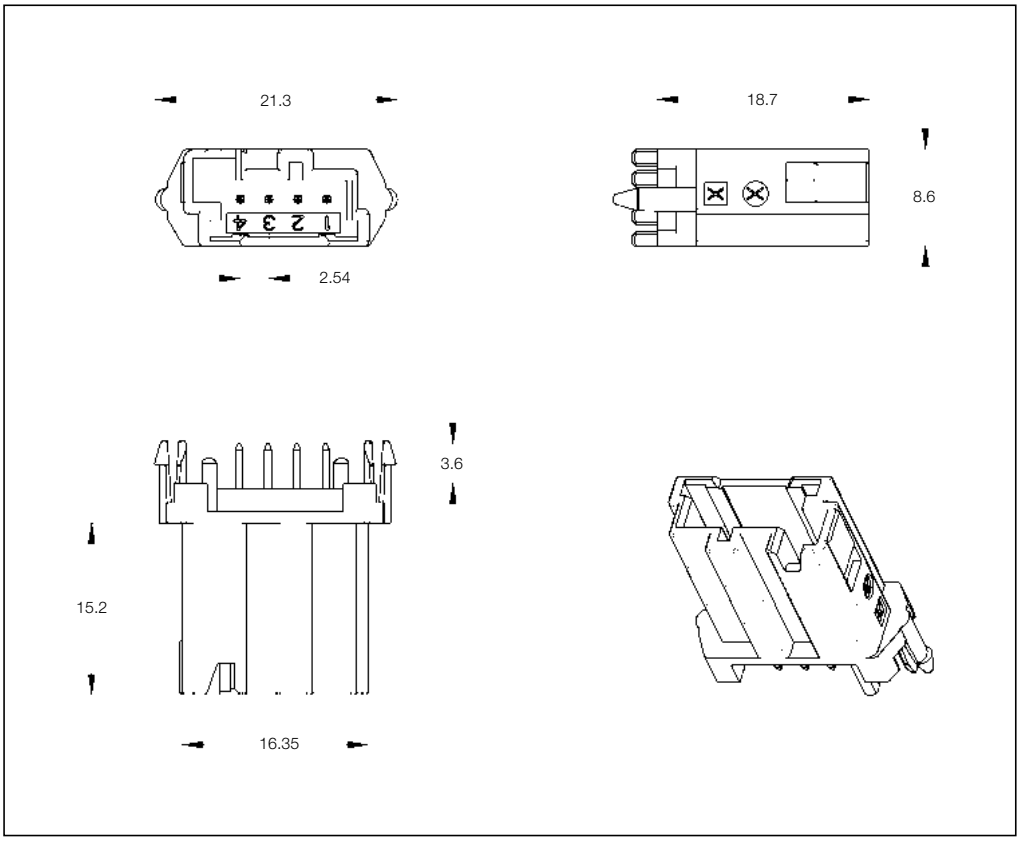

4 Position PCB Header

No. of Pos.	Keying Options	Housing Color	Part Numbers					
			PCB Header Right-Angle	PCB Header Vertical	Cover	Lever	Retainer Housing	Mating Receptacle Housing
4	–	See customer drawing	–	1379165-1	–	–	–	–
			–	1379165-3/-7				
			–	1-1379165-3				
			–	1-1379165-5				
			–	1-1379165-6				

3

Technical Features

No. of Positions:
4 Positions

Housing Material:
PA66 GF25

Material and Finish:
CuMg 0.1

Product Specification:
—

Application Specification:
—

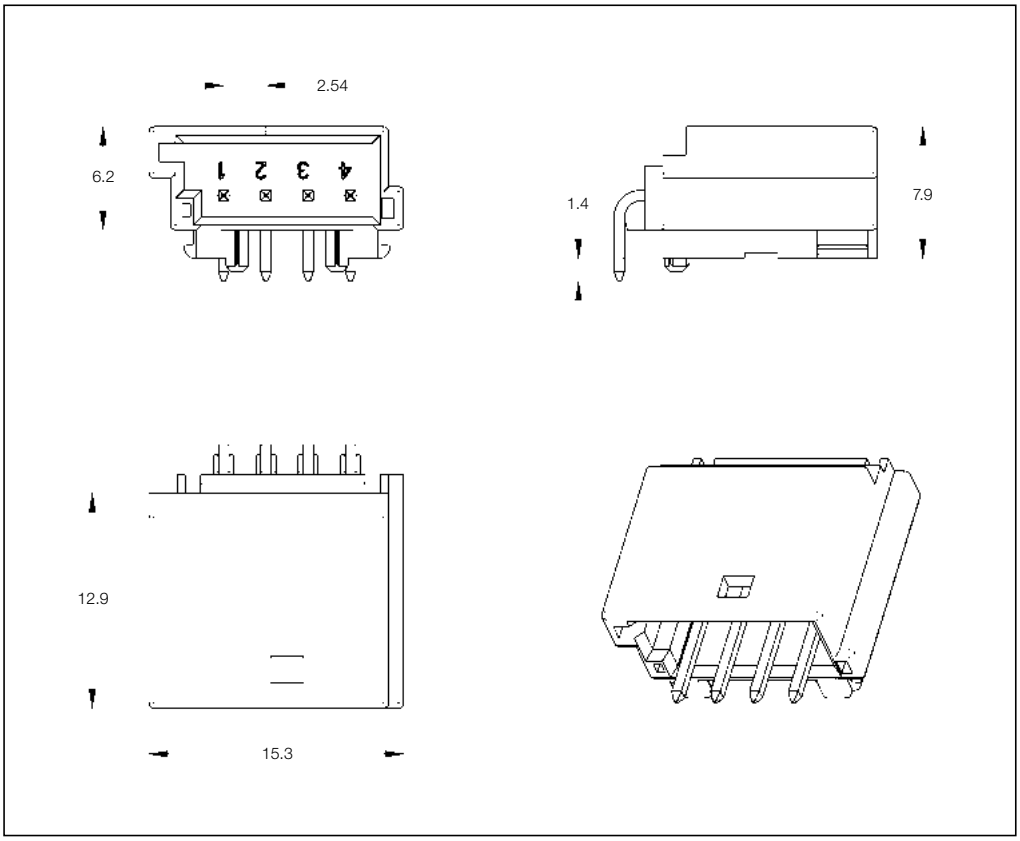

4 Position PCB Header

No. of Pos.	Keying Options	Housing Color	Part Numbers					
			PCB Header Right-Angle	PCB Header Vertical	Cover	Lever	Retainer Housing	Mating Receptacle Housing
4	–	Black	1-1355897-1	–	–	–	–	–

All specifications subject to change. Consult TE Connectivity for latest specifications.

Receptacle Housings

Technical Features

No. of Positions:
5 Positions
(3 Pos. MQS + 2 Pos. MPQ)

Housing Material:
PBT GF10

Wire Size Range:
0.20–0.75 mm^2

Product Specification:
108-15315

Application Specification:
—

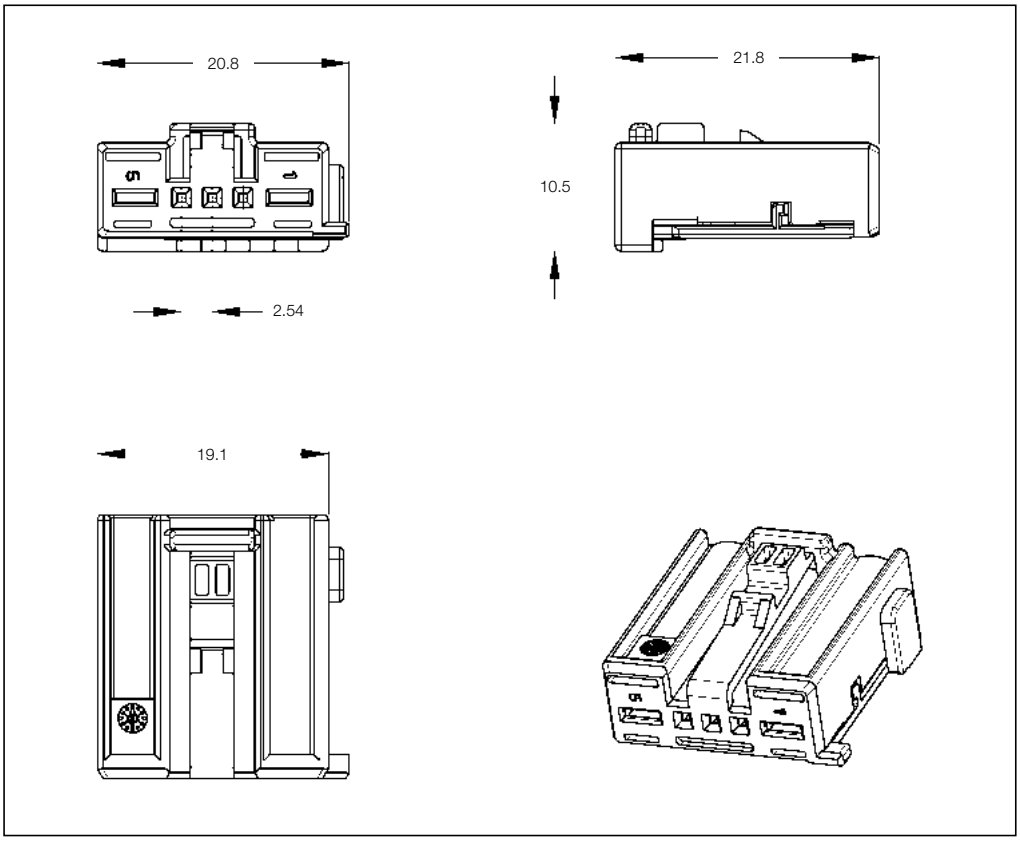

5 Position Receptacle Housings

No. of Pos.	Keying Options	Housing Color	Part Numbers						
			Receptacle Housing	Cover	Lever	Retainer Housing	Mating Pin Housing	Mating PCB Header Right-Angle	Mating PCB Header Vertical
5	Z	Black	1438992-1	–	–	–	–	–	–
	Z	White	1438992-2						
	A	Black	1438992-3						
	B	White	1438992-4						
	C	Blue	1438992-5						

Receptacle Housings

Technical Features

No. of Positions:
5 Positions

Housing Material:
PBT GF10

Wire Size Range:
0.20–0.75 mm^2

Product Specification:
108-18924

Application Specification:
114-18630

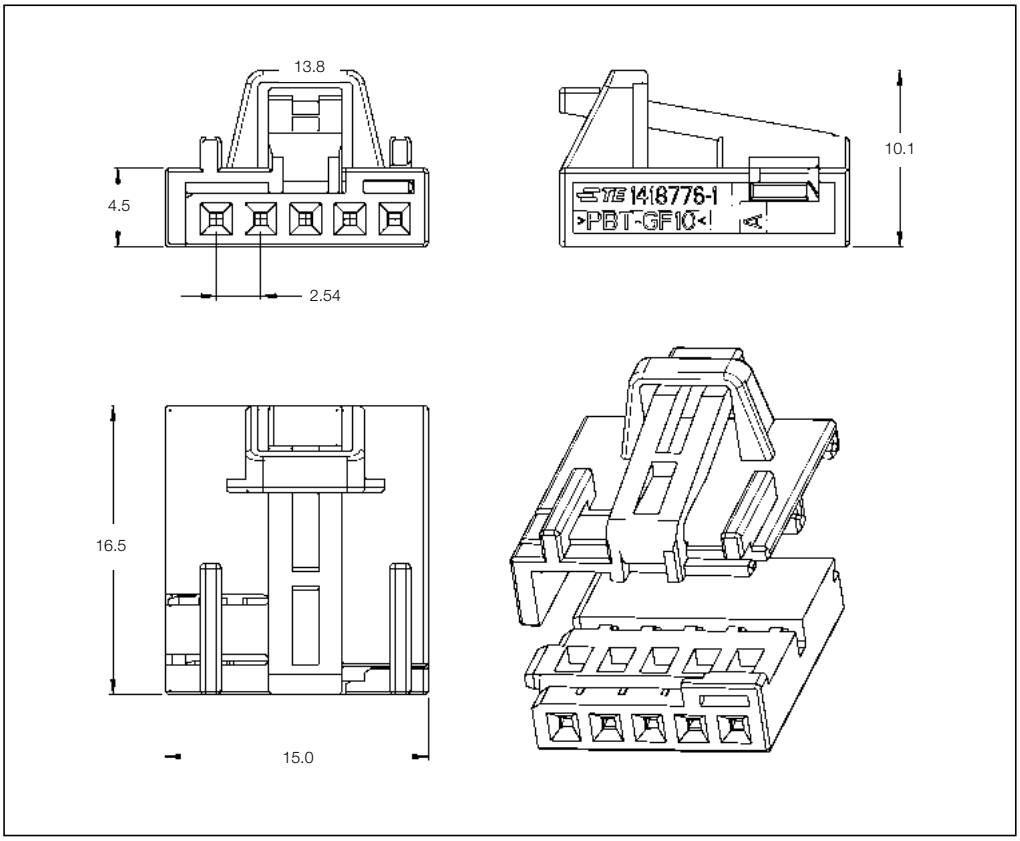

5 Position Receptacle Housings

No. of Pos.	Keying Options	Housing Color	Part Numbers						
			Receptacle Housing	Cover	Lever	Retainer Housing	Mating Pin Housing	Mating PCB Header Right-Angle	Mating PCB Header Vertical
5	–	Brown	1-1418775-1	1418776-1 1418776-2	–	–	–	–	–

All specifications subject to change. Consult TE Connectivity for latest specifications.

Pin Housings

Technical Features

No. of Positions:
5 Positions

Housing Material:
PBT GF10

Wire Size Range:
0.20–0.75 mm^2

Product Specification:
108-18294

Application Specification:
114-18630

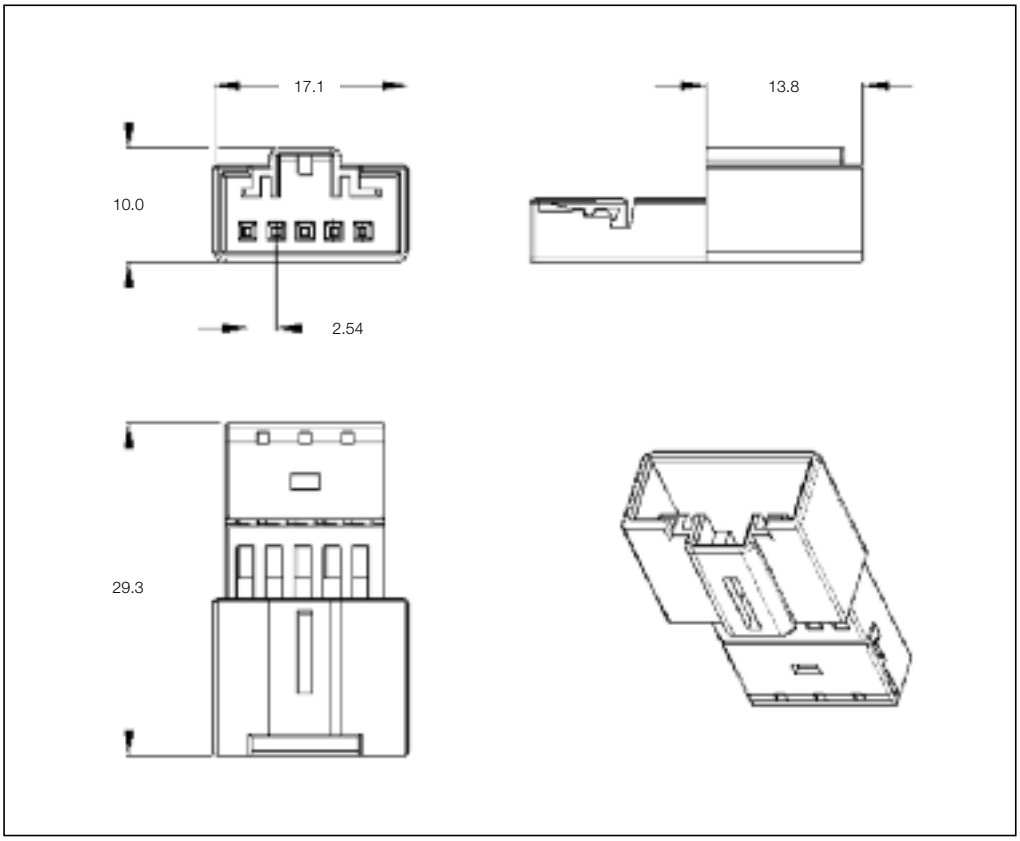

5 Position Pin Housing

No. of Pos.	Keying Options	Housing Color	Part Numbers				
			Pin Housing	Cover	Lever	Retainer Housing	Mating Receptacle Housing
5	A	Brown	1-1418778-1	–	–	–	–

Receptacle Housings

3

Technical Features

No. of Positions:
6 Positions

Housing Material:
PBT

Wire Size Range:
0.20–0.75 mm^2

Product Specification:
108-61030

Application Specification:
114-18030

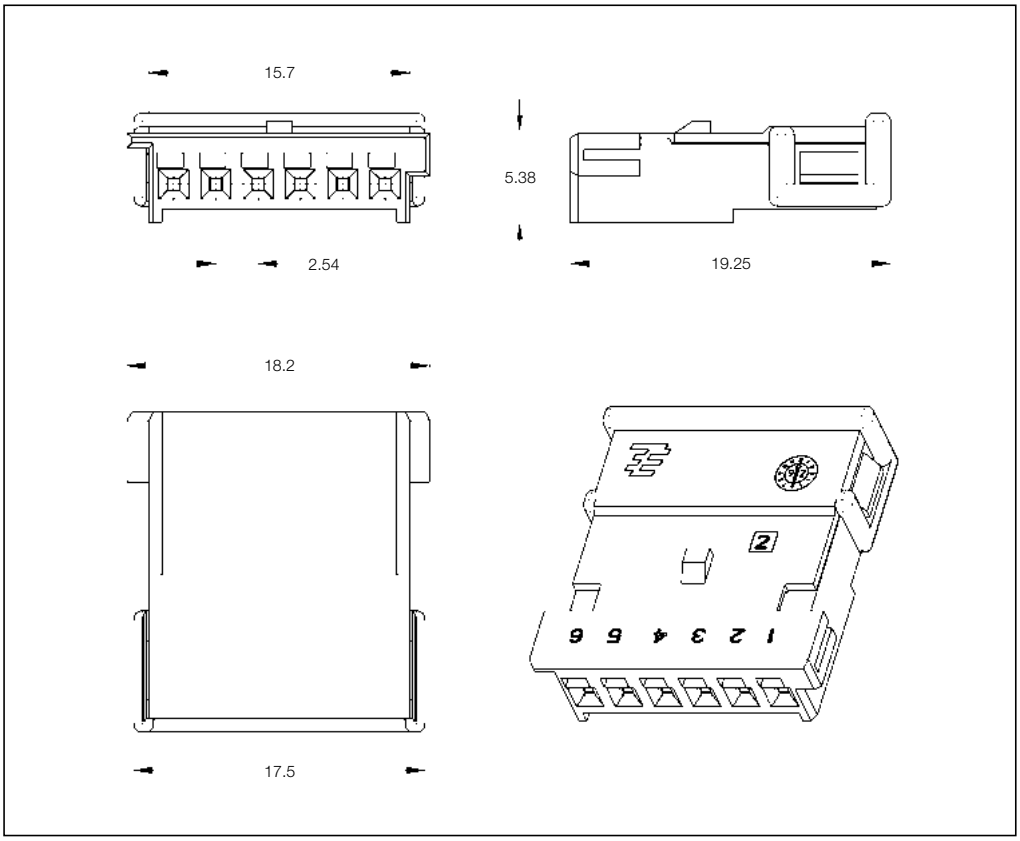

6 Position Receptacle Housings

No. of Pos.	Keying Options	Housing Color	Part Numbers							
			Receptacle Housing	Cover	Locking Device	Cover and Lever	Retainer Housing	Mating Pin Housing	Mating PCB Header Right-Angle	Mating PCB Header Vertical
6	Z	Black	936289-2	–	–	–	–	–	936287-2	–
		Natural	936289-5							

Mating Header
See Page 3-43

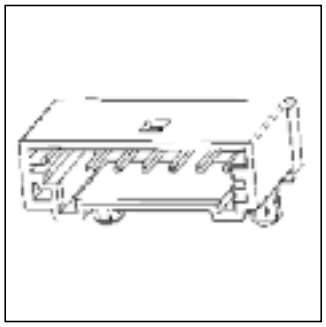

All specifications subject to change. Consult TE Connectivity for latest specifications.

Receptacle Housings

Technical Features

No. of Positions:
6 Positions

Housing Material:
PBT GF20

Wire Size Range:
0.35–0.75 mm^2

Product Specifications:
108-15142 Receptacle Housing
108-15192 Cover and Locking

Application Specifications:
411-15567 Receptacle Housing
411-15608 Cover and Locking

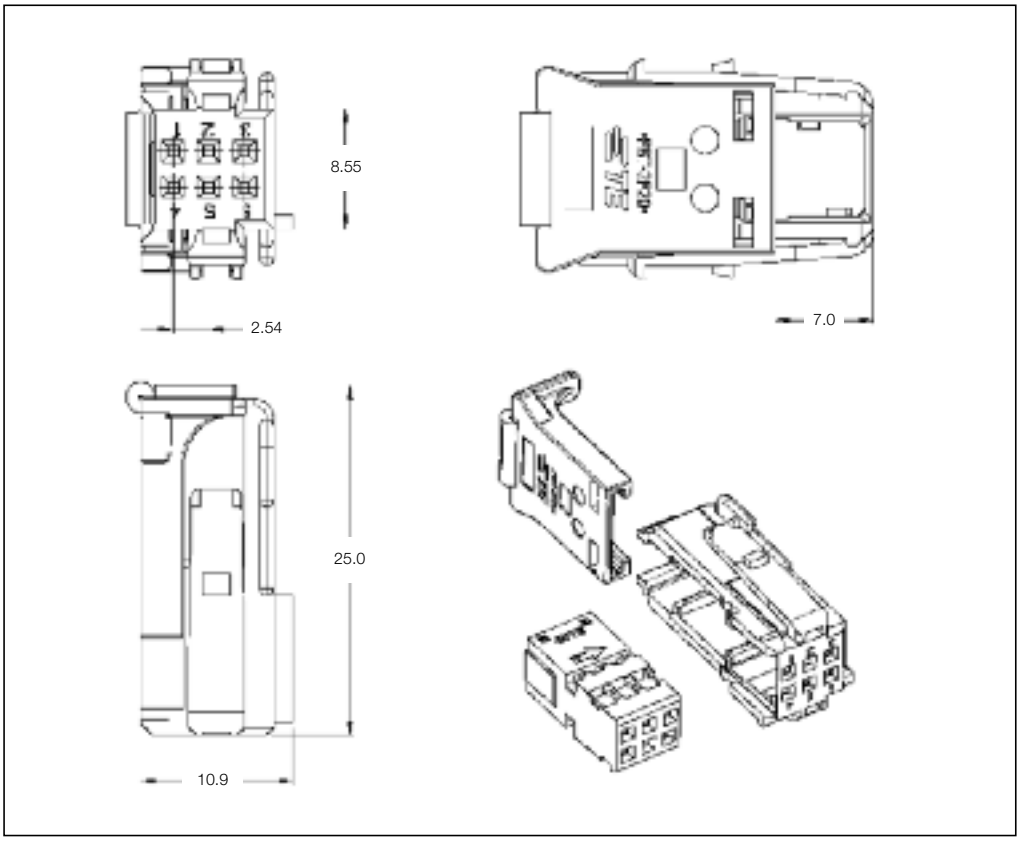

6 Position Receptacle Housings

No. of Pos.	Keying Options	Housing Color	Part Numbers							
			Receptacle Housing	Cover	Locking Device	Cover and Lever	Retainer Housing	Mating Pin Housing	Mating PCB Header Right-Angle	Mating PCB Header Vertical
6	–	Black	185311-1	953382-1	953381-1	–	–	1379118-1	953440-1 953442-1 953444-1	953363-1 1379816-1
		White	–	953382-2	–	–	–	1379118-2	953440-2 953442-2	–
		Green	–	953382-3	–	–	–	1379118-3	953440-4 953442-4	1379816-3
		Brown	–	953382-4	–	–	–	1379118-4	953440-3 953442-3 –	953363-3 1379816-4

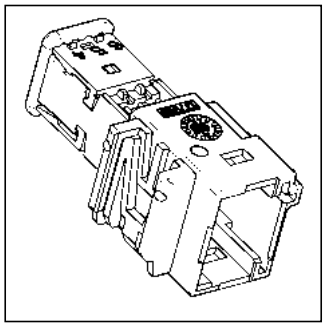

Mating Header
See Page 3-44–3-49

Receptacle Housings

Technical Features

No. of Positions:
6 Position Kit

Housing Material:
PBT GF/PA66 GF

Wire Size Range:
0.35–0.75 mm^2

Product Specification:
—

Application Specification:
—

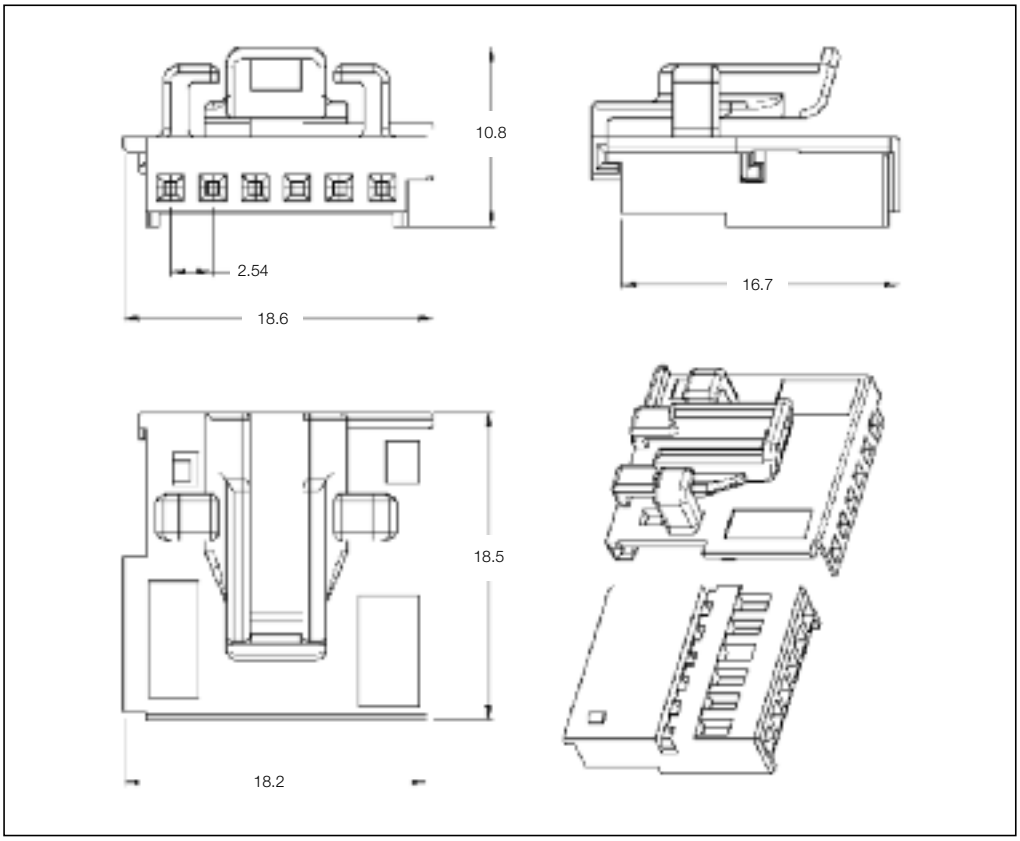

6 Position Receptacle Housings

No. of Pos.	Keying Options	Housing Color	Part Numbers							
			Receptacle Housing	Cover	Locking Device	Cover and Lever	Retainer Housing	Mating Pin Housing	Mating PCB Header Right-Angle	Mating PCB Header Vertical
6	A	Black	284802-1	–	–	–	–	–	–	–
	B	Brown	284802-2							

All specifications subject to change. Consult TE Connectivity for latest specifications.

Receptacle Housings

Technical Features

No. of Positions:
6 Positions (2 × 3)

Housing Material:
PBT GF10

Wire Size Range:
0.35–0.75 mm²

Product Specification:
108-18507-0

Application Specification:
—

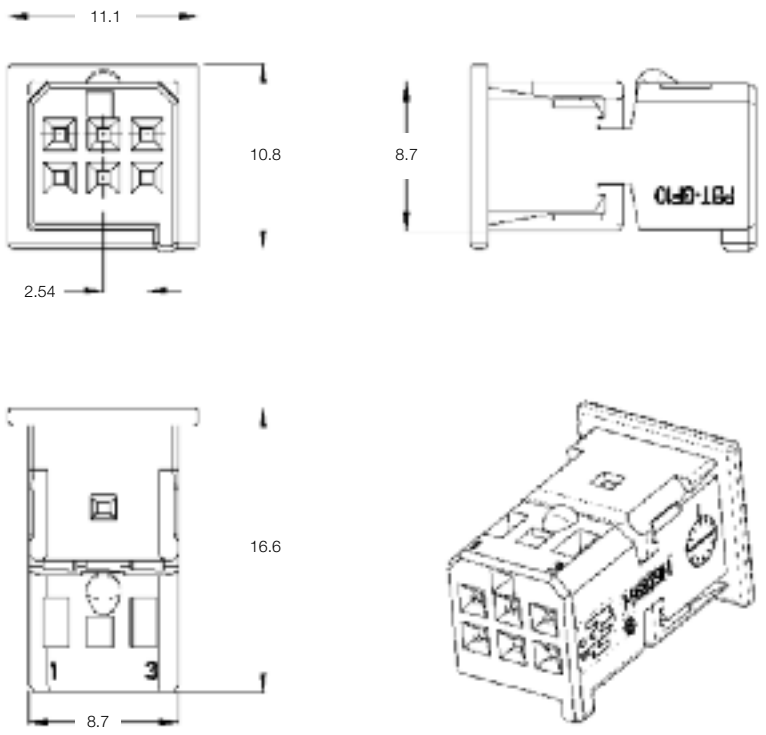

6 Position Receptacle Housings

No. of Pos.	Keying Options	Housing Color	Part Numbers							
			Receptacle Housing	Cover	Locking Device	Cover and Lever	Retainer Housing	Mating Pin Housing	Mating PCB Header Right-Angle	Mating PCB Header Vertical
6	A	Black	1-968291-2	–	–	–	–	–	–	–
	B	Natural	2-968291-2							

Receptacle Housings

3

Technical Features

No. of Positions:
6 Positions

Housing Material:
PBT GF10

Wire Size Range:
0.20–0.75 mm^2

Product Specification:
—

Application Specification:
—

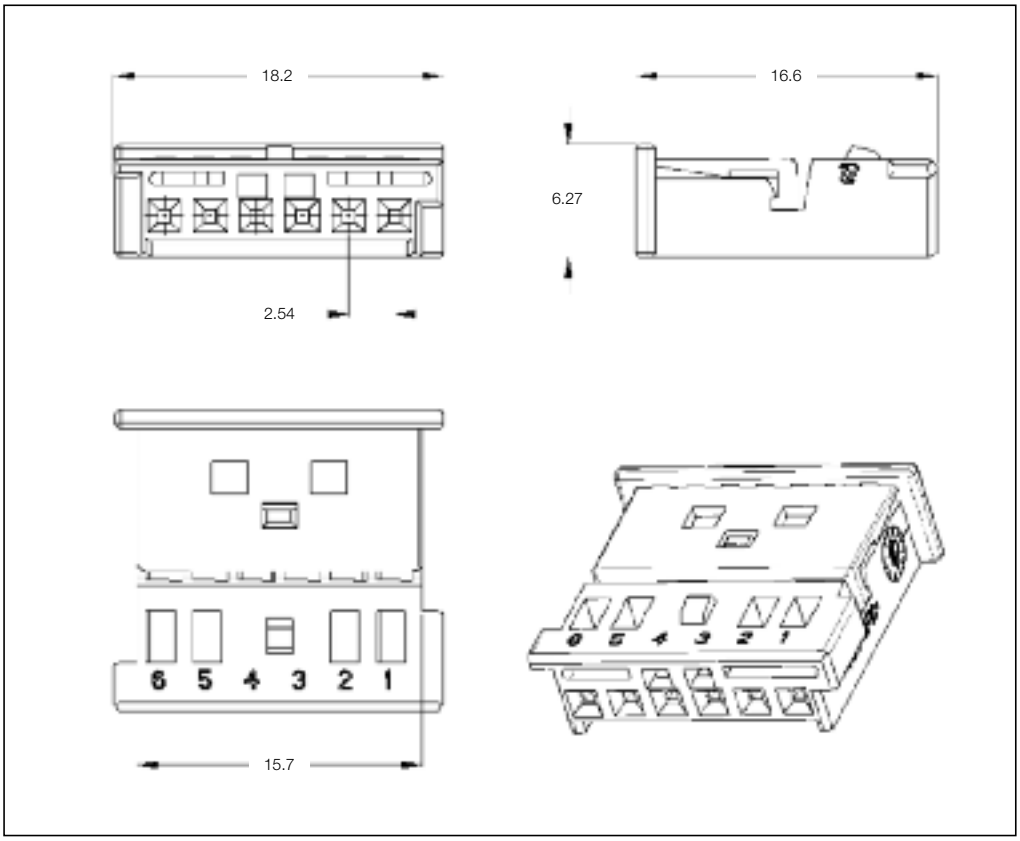

6 Position Receptacle Housings

No. of Pos.	Keying Options	Housing Color	Part Numbers						
			Receptacle Housing	Cover	Lever	Retainer Housing	Mating Pin Housing	Mating PCB Header Right-Angle	Mating PCB Header Vertical
6	A	Black	1-1241370-3	–	–	–	–	–	–
	B	Natural	2-1241370-3						

All specifications subject to change. Consult TE Connectivity for latest specifications.

Receptacle Housings

Technical Features

No. of Positions:
6 Positions

Housing Material:
PBT GF20

Wire Size Range:
0.20–0.75 mm^2

Product Specification:
—

Application Specification:
—

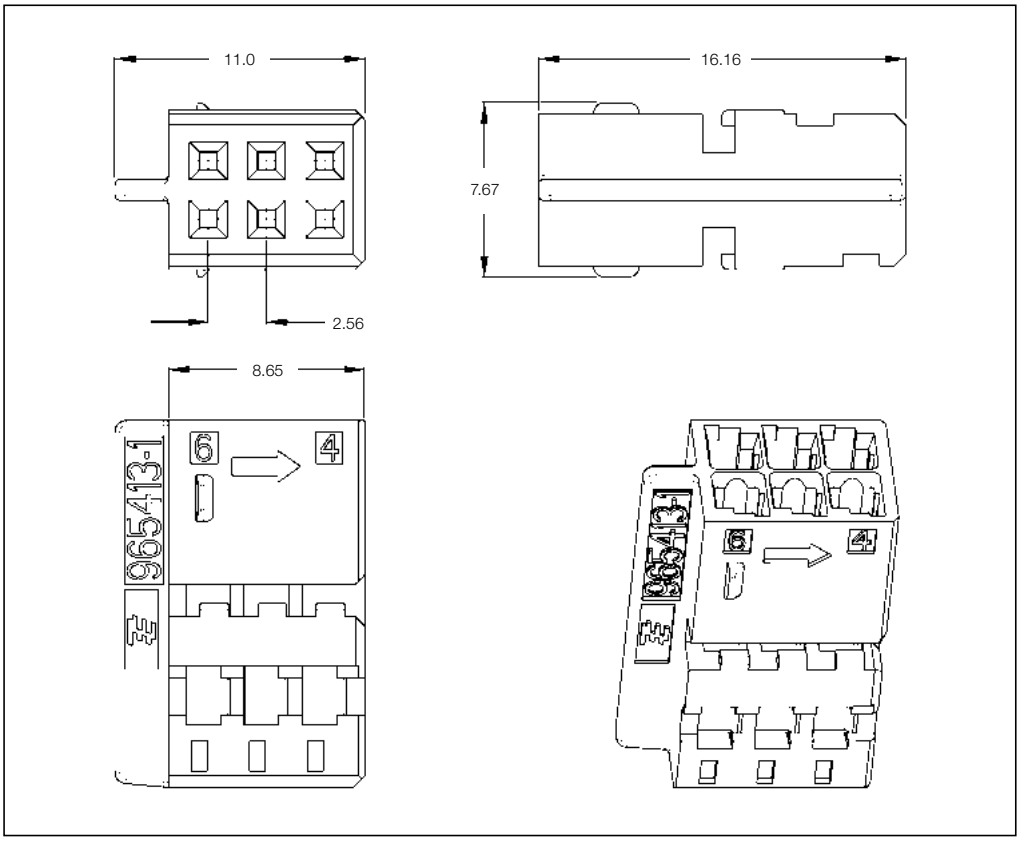

6 Position Receptacle Housing

No. of Pos.	Keying Options	Housing Color	Part Numbers						
			Receptacle Housing	Cover	Lever	Retainer Housing	Mating Pin Housing	Mating PCB Header Right-Angle	Mating PCB Header Vertical
6	–	Black	965413-1	–	–	–	–	–	–

Receptacle Housings

Technical Features

No. of Positions:
6 Positions (2 × 3)

Housing Material:
PBT GF10

Wire Size Range:
0.20–0.75 mm²

Product Specification:
—

Application Specification:
—

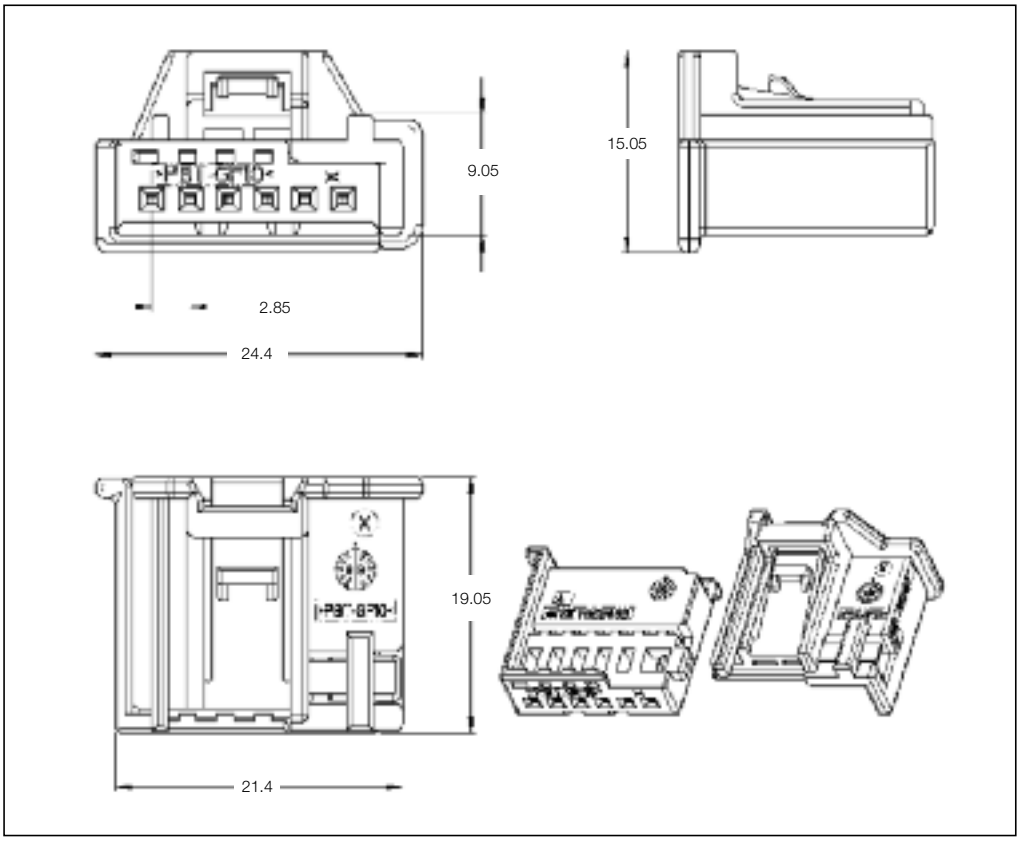

6 Position Receptacle Housing

No. of Pos.	Keying Options	Housing Color	Part Numbers						
			Receptacle Housing	Cover	Lever	Retainer Housing	Mating Pin Housing	Mating PCB Header Right-Angle	Mating PCB Header Vertical
6	A	Black	1355082-1	–	–	1355081-1	–	–	–
		Brown	1355082-2			1355081-2			
		White	1355082-3			1355081-3			
		Blue	1355082-4			1355081-4			
		White	1355082-5			–			

All specifications subject to change. Consult TE Connectivity for latest specifications.

Receptacle Housings

Technical Features

No. of Positions:
6 Positions kit

Housing Material:
PBT GF

Wire Size Range:
0.20–0.75 mm^2

Product Specification:
—

Application Specification:
—

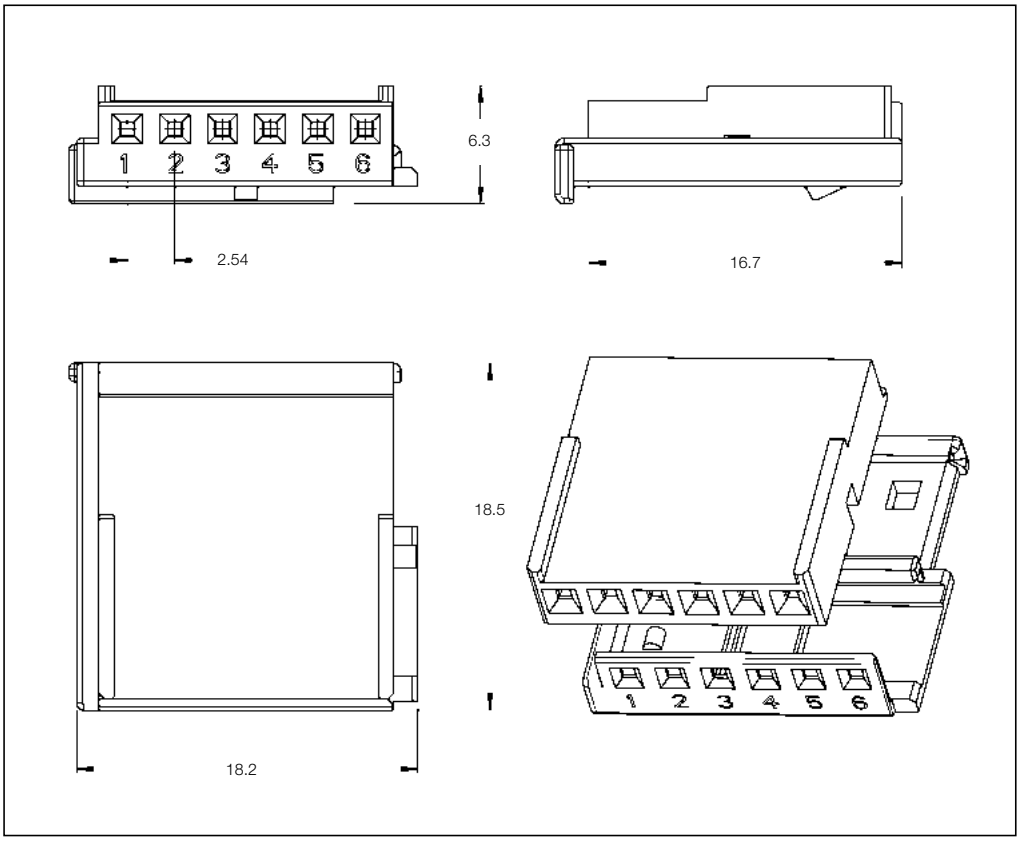

6 Position Receptacle Housings

No. of Pos.	Keying Options	Housing Color	Part Numbers						
			Receptacle Housing	Cover	Lever	Retainer Housing	Mating Pin Housing	Mating PCB Header Right-Angle	Mating PCB Header Vertical
6	A	Black	1394005-1	–	–	–	–	–	–

Pin Housings

Technical Features

No. of Positions:
6 Positions (2 × 3)

Housing Material:
PBT GF10

Wire Size Range:
0.20–0.75 mm²

Product Specification:
—

Application Specification:
—

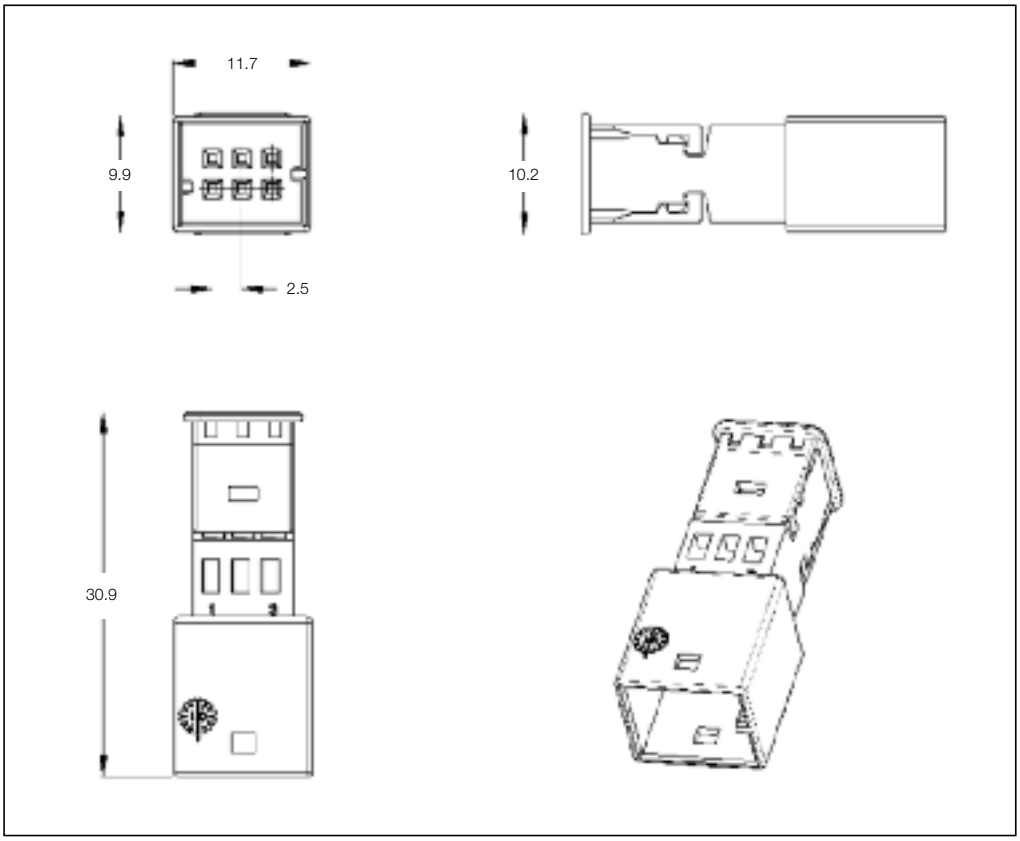

6 Position Pin Housing

No. of Pos.	Keying Options	Housing Color	Part Numbers				
			Pin Housing	Cover	Lever	Retainer Housing	Mating Receptacle Housing
6	–	Gray	1-1418784-1	–	–	–	–

All specifications subject to change. Consult TE Connectivity for latest specifications.

Pin Housings

Technical Features

No. of Positions:
6 Positions
for Flex Foil Application

Housing Material:
PBT GF10

Wire Size Range:
0.20–0.75 mm^2

Product Specification:
108-18620

Application Specification:
—

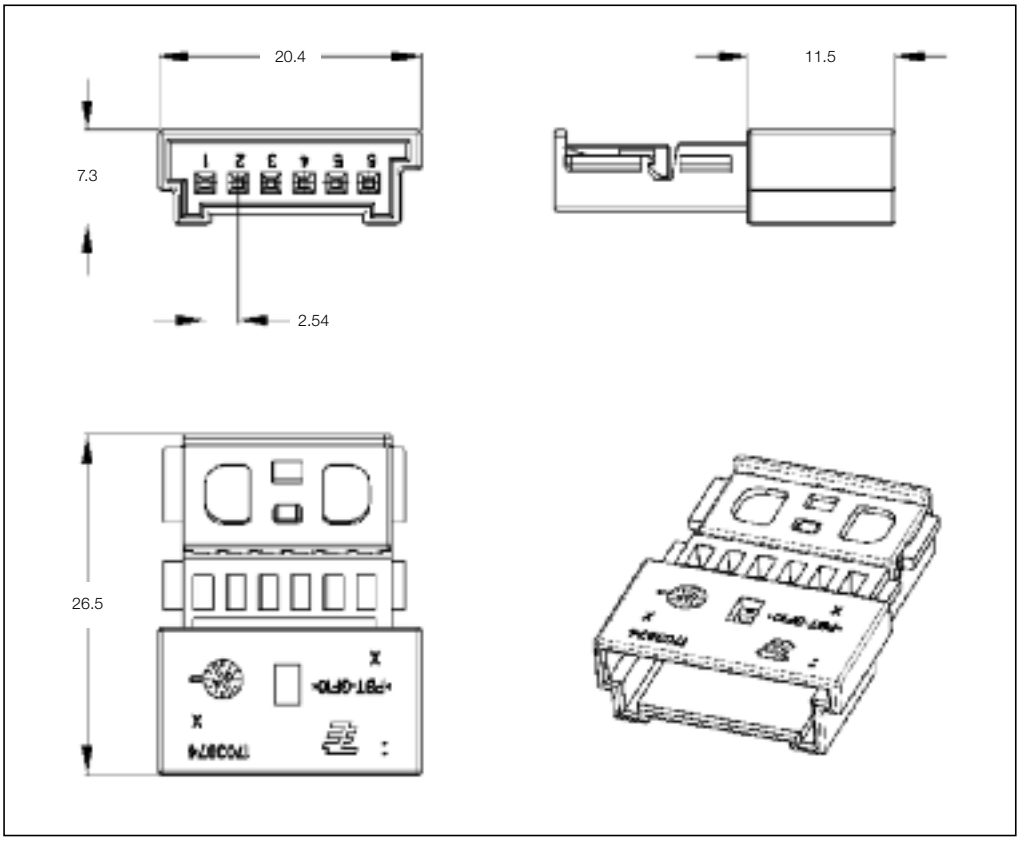

6 Position Pin Housing

No. of Pos.	Keying Options	Housing Color	Part Numbers				
			Pin Housing	Cover	Lever	Retainer Housing	Mating Receptacle Housing
6	A	Black	1703874-1	–	–	–	–

Pin Housings

Technical Features

No. of Positions:
6 Positions
for Flex Foil Application

Housing Material:
PBT GF10

Wire Size Range:
0.20–0.75 mm^2

Product Specification:
108-18620

Application Specification:
—

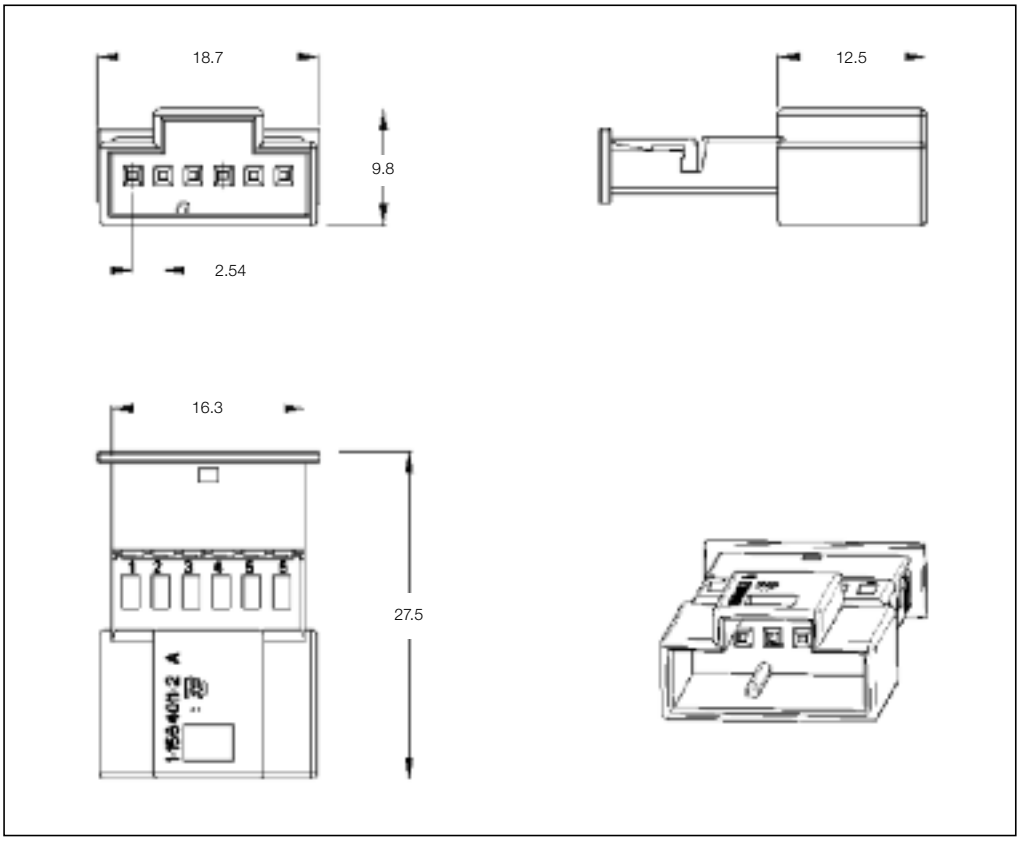

6 Position Pin Housings

No. of Pos.	Keying Options	Housing Color	Part Numbers				
			Pin Housing	Cover	Lever	Retainer Housing	Mating Receptacle Housing
6	A	Black	1-1564011-2	–	–	–	–
	B	Natural	2-1564011-2	–	–	–	–

All specifications subject to change. Consult TE Connectivity for latest specifications.

Pin Housings

Technical Features

No. of Positions:
6 Position Assembly

Housing Material:
PBT GF20

Material and Finish:
CuSn, tin-lead plated

Product Specification:
108-18030

Application Specification:
114-18021

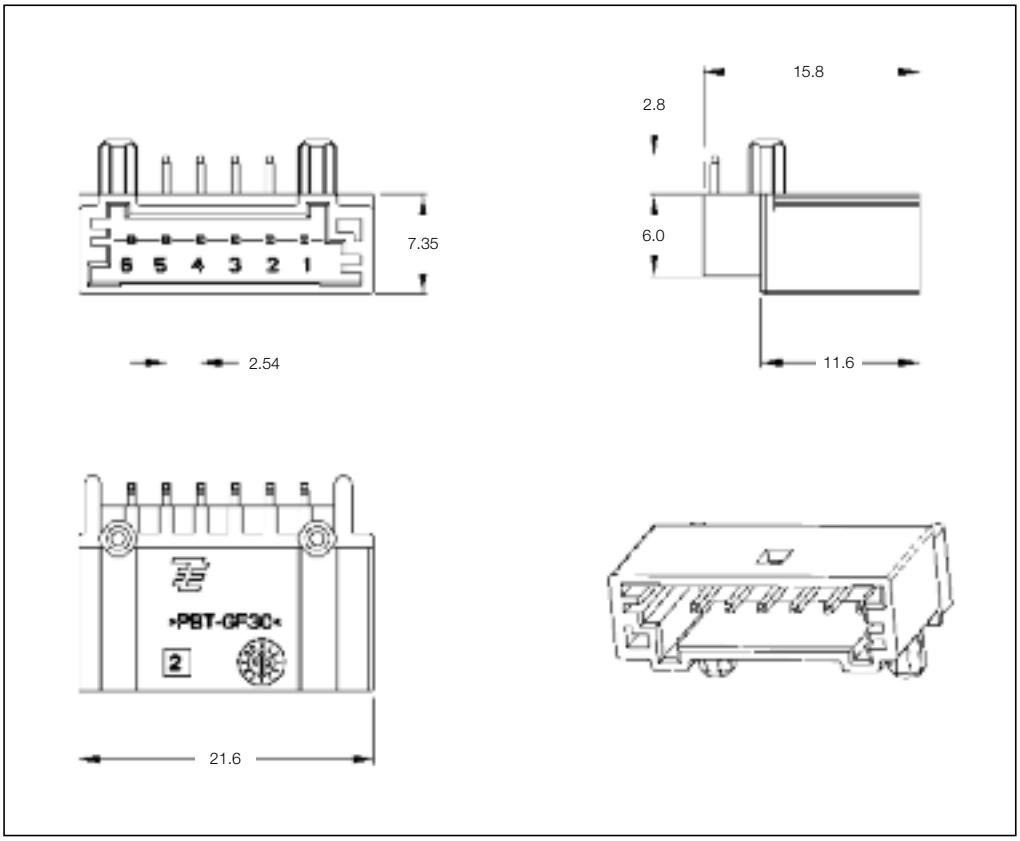

6 Position PCB Header

No. of Pos.	Keying Options	Housing Color	Part Numbers					
			PCB Header Right-Angle	PCB Header Vertical	Cover	Cover and Lever	Retainer Housing	Mating Receptacle Housing
6	B	Natural	936287-2	–	–	–	–	936289-5

Mating Receptacle Housing
See Page 3-32

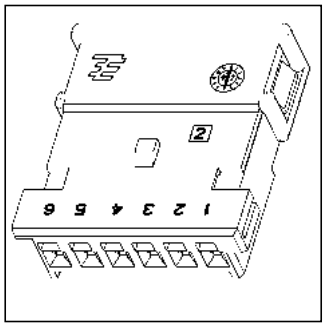

Printed Circuit Board Headers

Technical Features

No. of Positions:
6 Positions

Housing Material:
PBT GF20

Wire Size Range:
0.20–0.75 mm^2

Product Specification:
108-15311

Application Specification:
411-15526

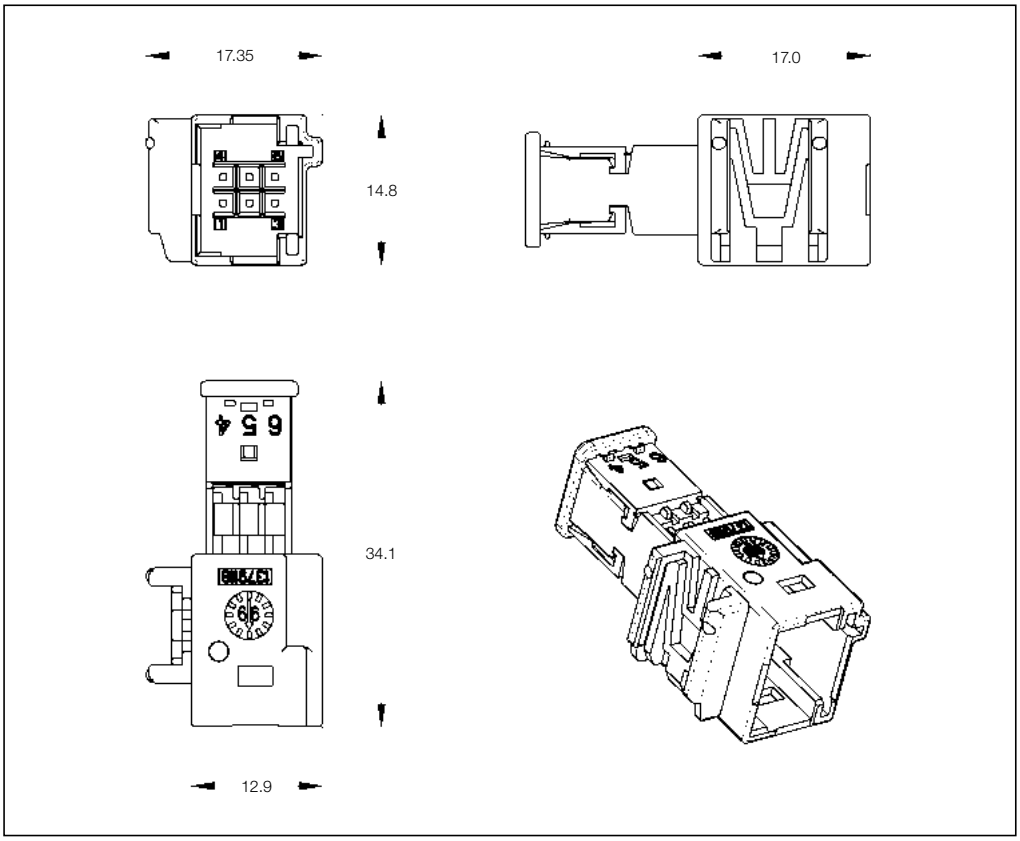

6 Position Pin Housings

No. of Pos.	Keying Options	Housing Color	Part Numbers					
			Pin Housing	Cover	Locking Device	Cover and Lever	Retainer Housing	Mating Counter Part
6	–	Black	1379118-1	–	–	–	–	185311-1
		White	1379118-2	–	–	–	–	–
		Green	1379118-3					
		Brown	1379118-4					

Mating Receptacle Housing
See Page 3-33

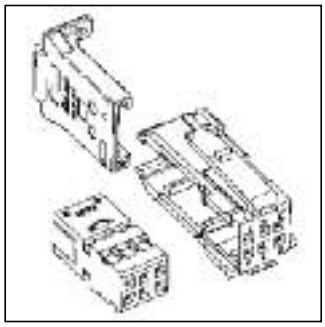

All specifications subject to change. Consult TE Connectivity for latest specifications.

Printed Circuit Board Headers

Technical Features

No. of Positions:
6 Positions with Board Locks

Housing Material:
SPS GF20

Material and Finish:
CuSn6, pre-tin plated

Product Specification:
108-15329

Application Specification:
—

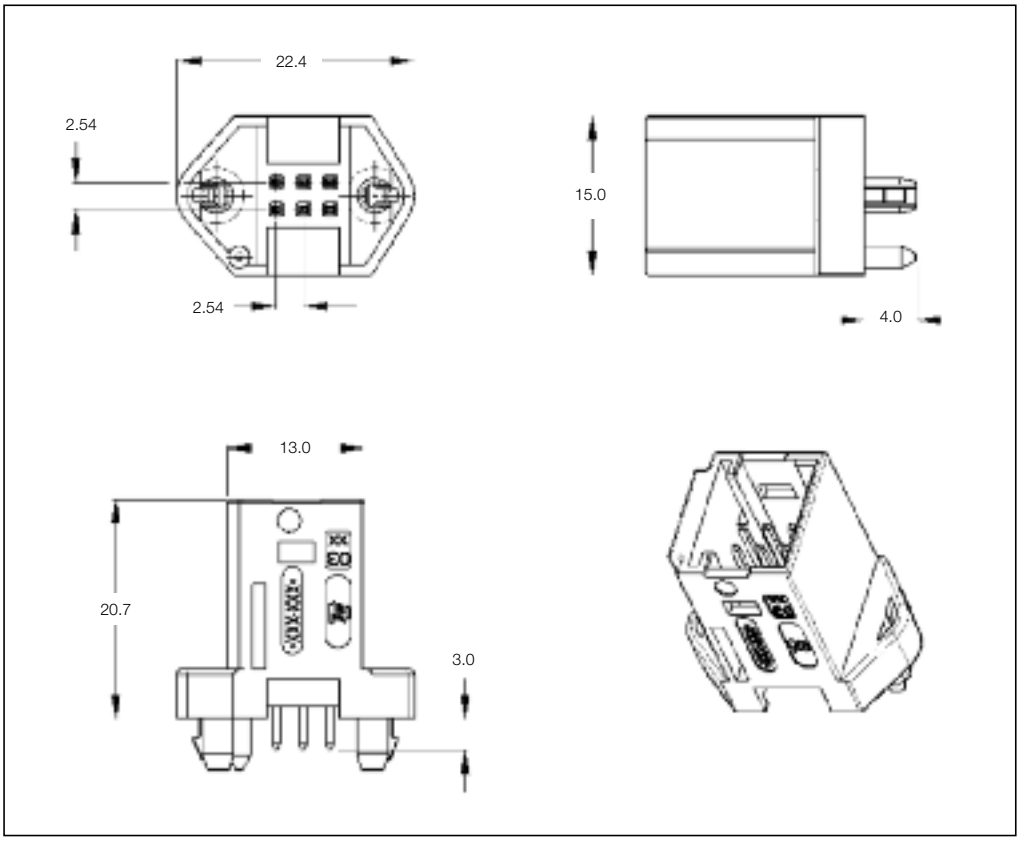

6 Position PCB Header

No. of Pos.	Keying Options	Housing Color	Part Numbers					
			PCB Header Right-Angle	PCB Header Vertical	Cover	Cover and Lever	Retainer Housing	Mating Counter Part
6	–	Black	–	1379816-1	–	–	–	185311-1 and 953382
		Green	–	1379816-3				
		Brown	–	1379816-4				

Mating Receptacle Housing
See Page 3-33

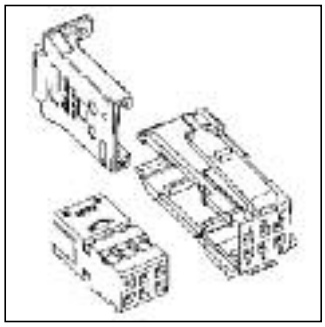

Printed Circuit Board Headers

Technical Features

No. of Positions:
6 Positions with Ears

Housing Material:
PBT GF20

Material and Finish:
CuSn, post tin plated

Product Specification:
108-15199

Application Specification:
—

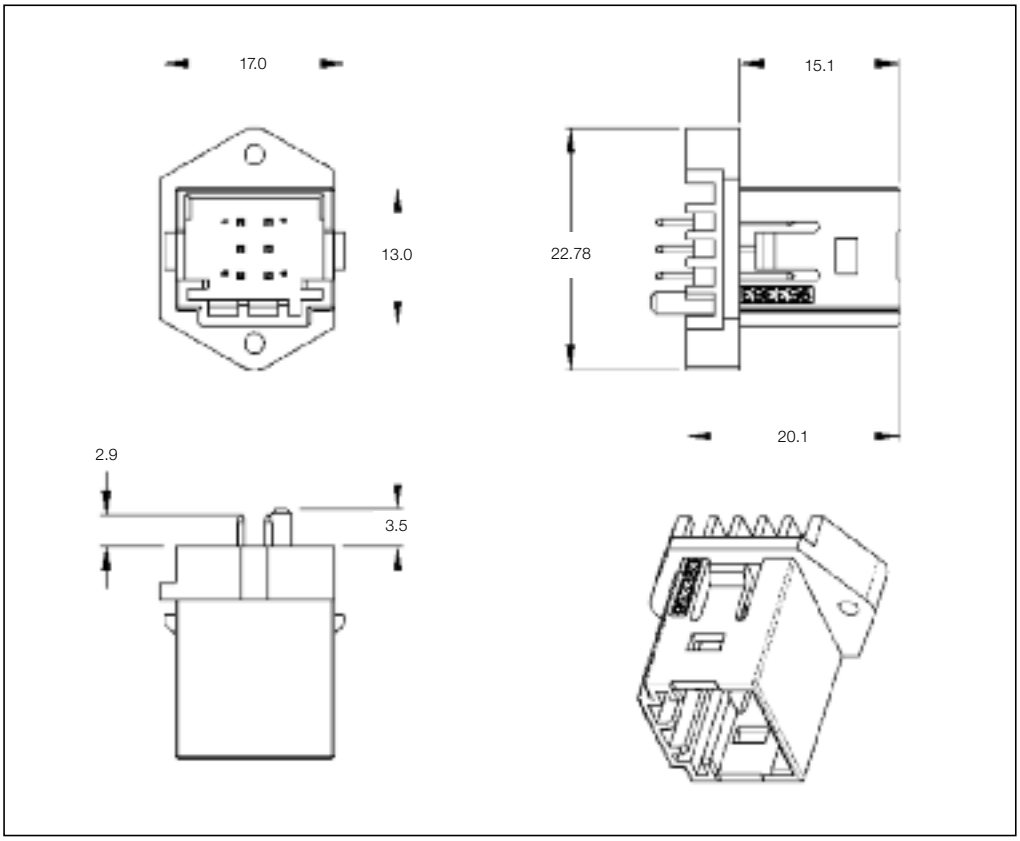

6 Position PCB Header

No. of Pos.	Keying Options	Housing Color	Part Numbers					
			PCB Header Right-Angle	PCB Header Vertical	Cover	Cover and Lever	Retainer Housing	Mating Counter Part
6	–	Black	–	953363-1	–	–	–	185311-1 and 953382
		White	–	953363-2				
		Brown	–	953363-3				
		Green	–	953363-4				

Mating Receptacle Housing
See Page 3-33

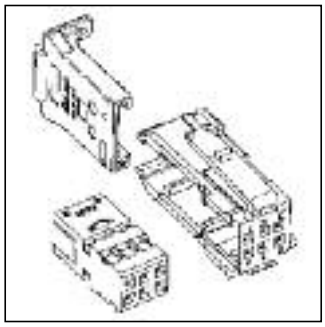

All specifications subject to change. Consult TE Connectivity for latest specifications.

Printed Circuit Board Headers

Technical Features

No. of Positions:
6 Positions with Ears

Housing Material:
PBT GF20

Material and Finish:
CuSn6, tin plated

Product Specification:
108-15150

Application Specification:
—

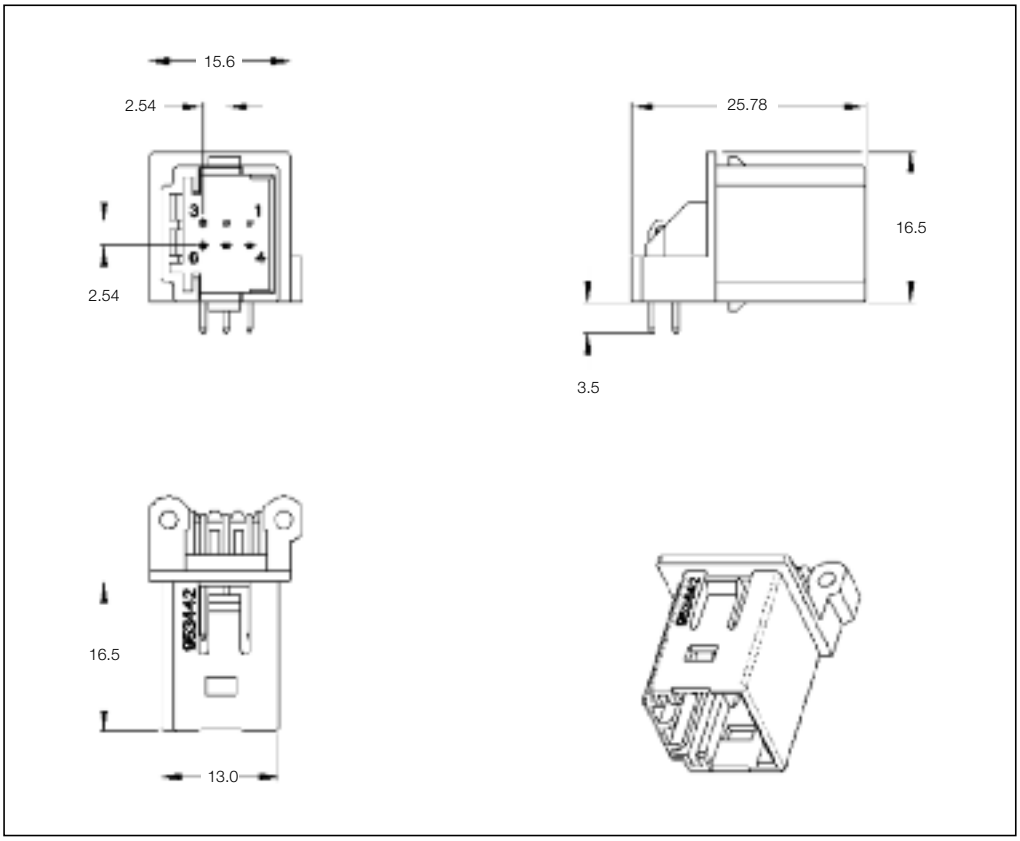

6 Position PCB Header

No. of Pos.	Keying Options	Housing Color	Part Numbers					
			PCB Header Right-Angle	PCB Header Vertical	Cover	Cover and Lever	Retainer Housing	Mating Counter Part
6	–	Black	953442-1	–	–	–	–	185311-1 and 953382
		White	953442-2	–				
		Brown	953442-3	–				
		Green	953442-4	–				

Mating Receptacle Housing
See Page 3-33

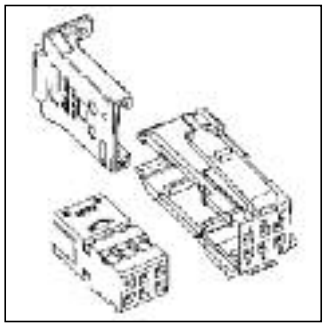

Printed Circuit Board Headers

Technical Features

No. of Positions:
6 Positions with 1 Pin

Housing Material:
PBT GF20

Material and Finish:
CuSn6, post tin plated

Product Specification:
108-15150

Application Specification:
—

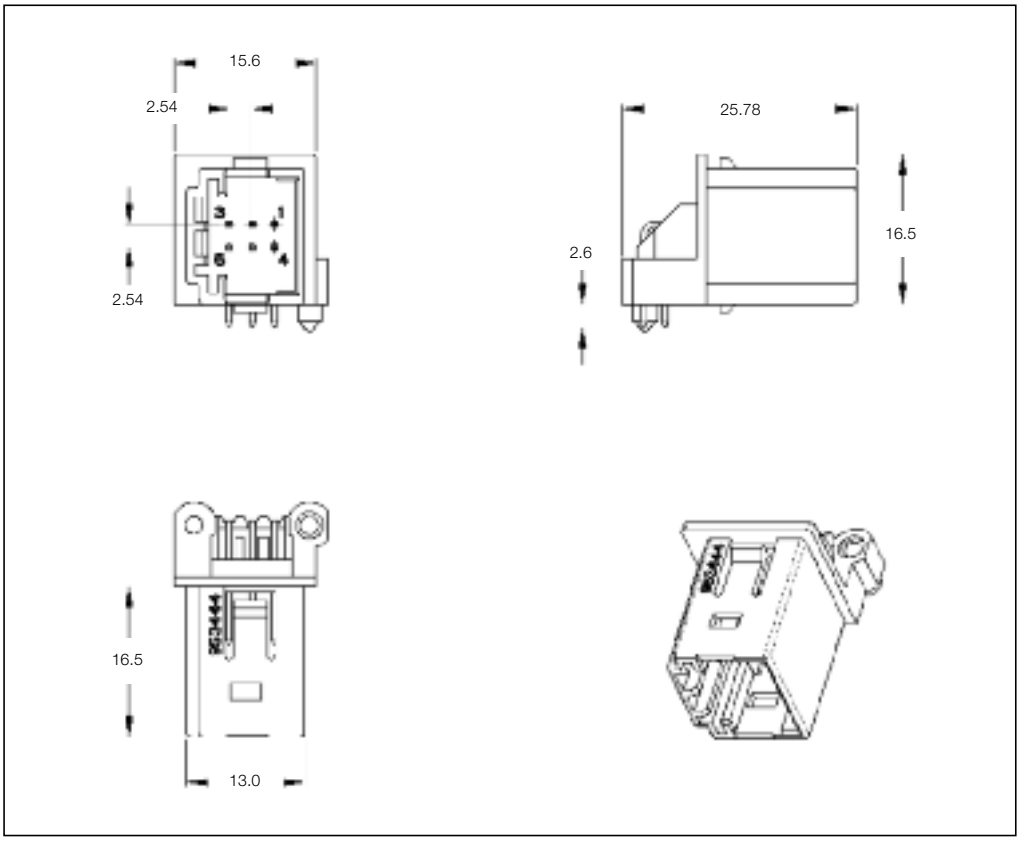

6 Position PCB Header

No. of Pos.	Keying Options	Housing Color	Part Numbers					
			PCB Header Right-Angle	PCB Header Vertical	Cover	Cover and Lever	Retainer Housing	Mating Counter Part
6	–	Black	953444-1	–	–	–	–	185311-1 and 953382
		Brown	953444-2	–				

Mating Receptacle Housing
See Page 3-33

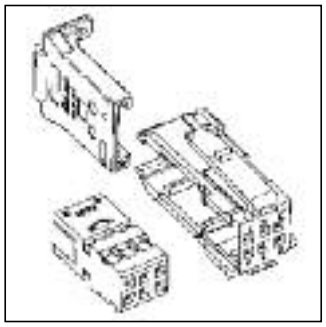

All specifications subject to change. Consult TE Connectivity for latest specifications.

Printed Circuit Board Headers

Technical Features

No. of Positions:
6 Positions with 2 Pins

Housing Material:
PBT GF20

Material and Finish:
CuSn6, post tin plated

Product Specification:
108-15150

Application Specification:
—

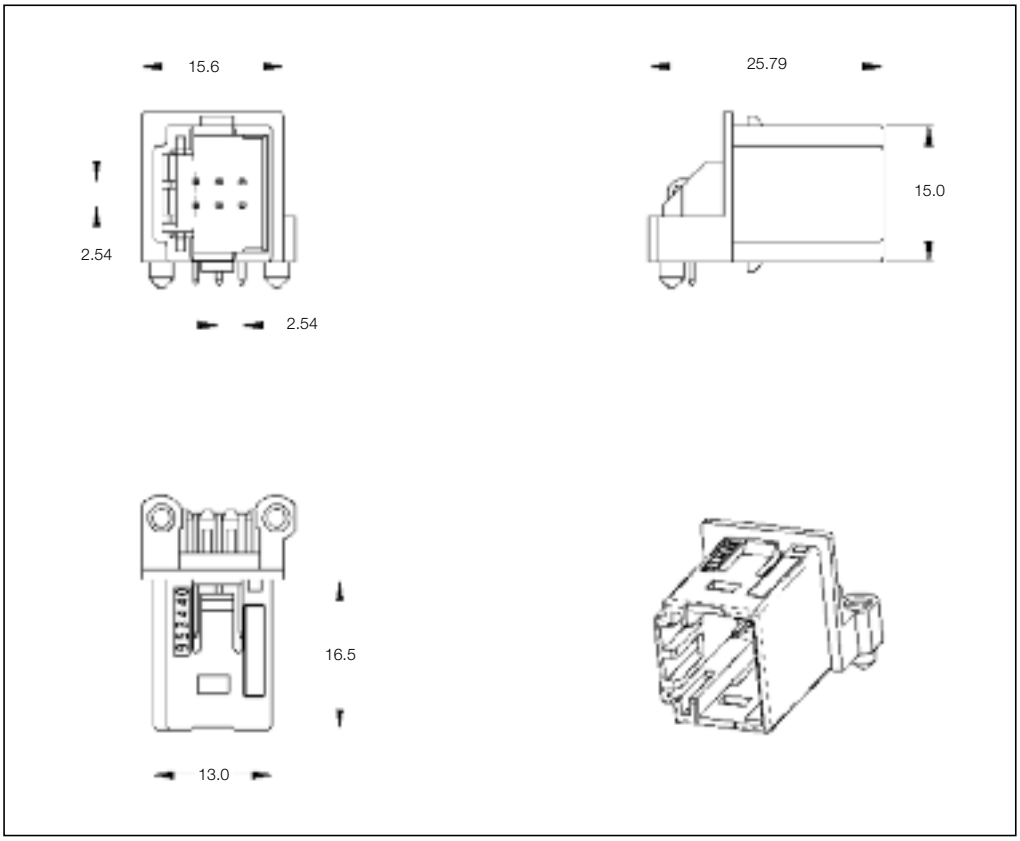

6 Position PCB Header

No. of Pos.	Keying Options	Housing Color	Part Numbers					
			PCB Header Right-Angle	PCB Header Vertical	Cover	Cover and Lever	Retainer Housing	Mating Counter Part
6	–	Black	953440-1	–	–	–	–	185311-1 and 953382
		White	953440-2	–				
		Brown	953440-3	–				
		Green	953440-4	–				

Mating Receptacle Housing
See Page 3-33

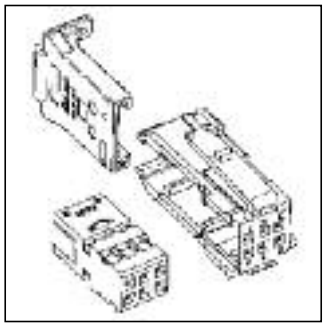

Printed Circuit Board Headers

Technical Features

No. of Positions:
6 Positions

Housing Material:
PBT GF15

Material and Finish:
CuMg 0.1, pre tinned

Product Specification:
—

Application Specification:
—

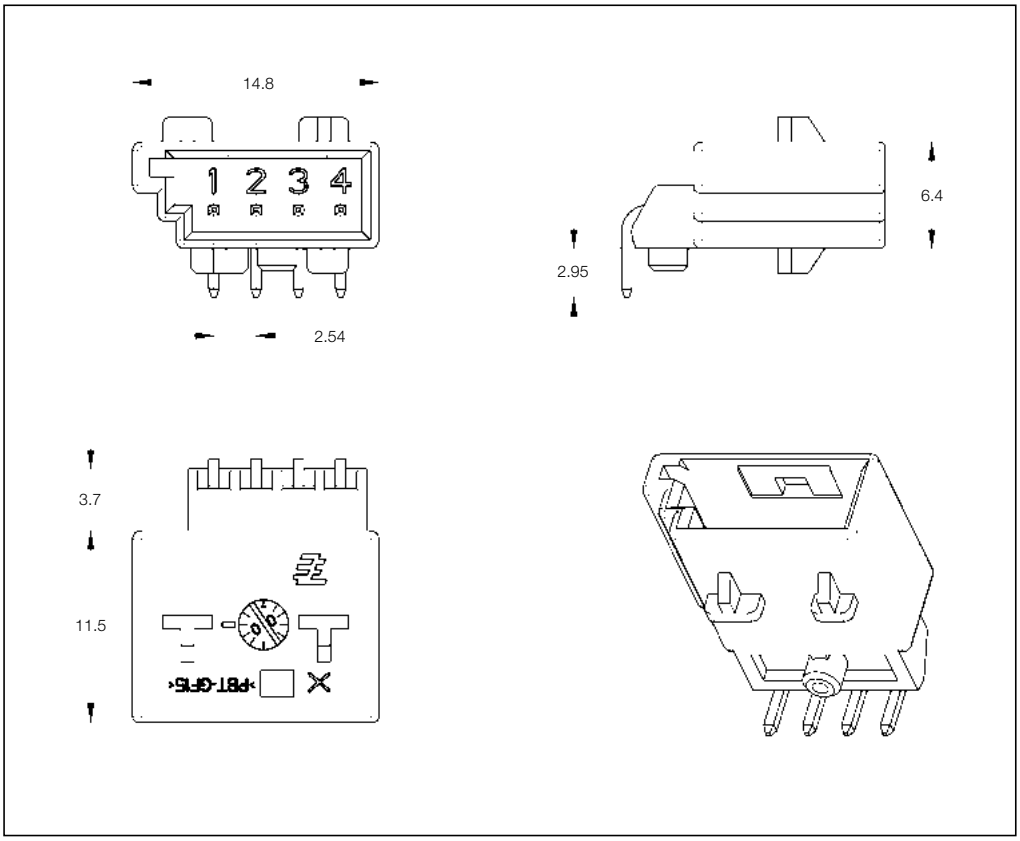

6 Position PCB Header

No. of Pos.	Keying Options	Housing Color	Part Numbers					
			PCB Header Right-Angle	PCB Header Vertical	Cover	Lever	Retainer Housing	Mating Receptacle Housing
6	–	Black	1-1394172-1	–	–	–	–	–

All specifications subject to change. Consult TE Connectivity for latest specifications.

Printed Circuit Board Headers

Technical Features

No. of Positions:
6 Positions

Housing Material:
PBT GF15

Material and Finish:
CuMg 0.1, pre tinned

Product Specification:
—

Application Specification:
—

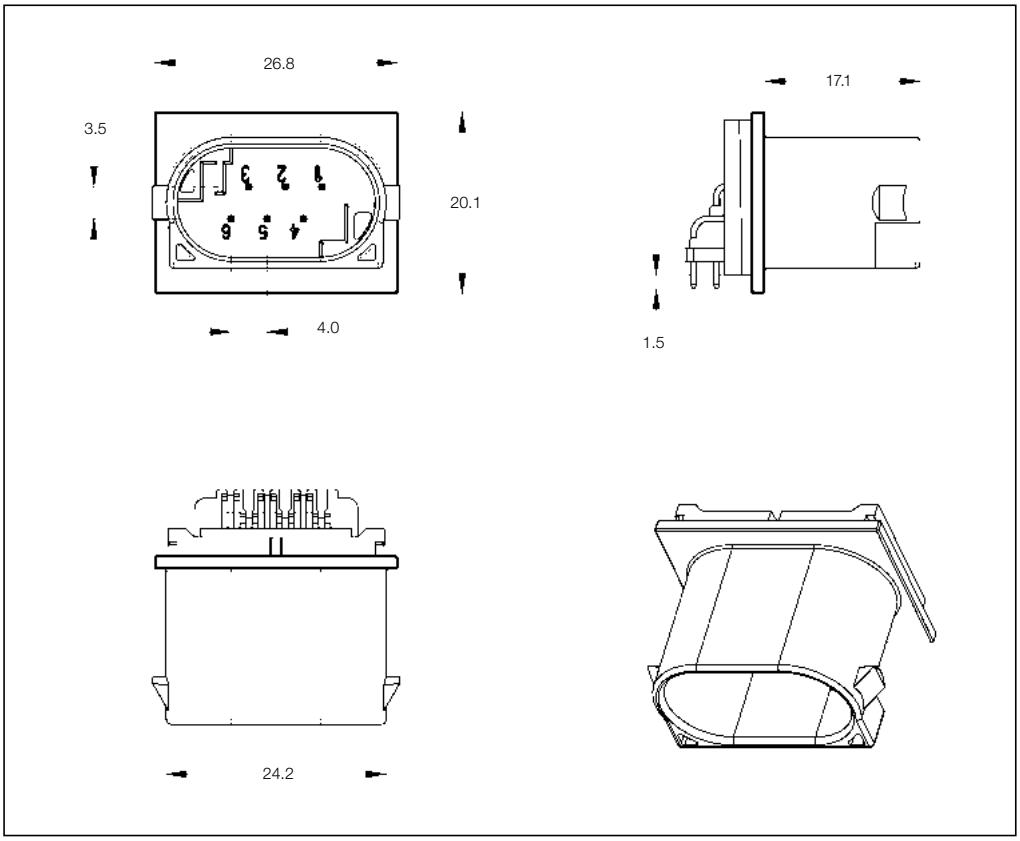

6 Position PCB Header

No. of Pos.	Keying Options	Housing Color	Part Numbers					
			PCB Header Right-Angle	PCB Header Vertical	Cover	Lever	Retainer Housing	Mating Receptacle Housing
6	–	Black	1241637-1	–	–	–	–	–
		Black	1241637-2	–				

3

Technical Features

No. of Positions:
6 Positions

Housing Material:
PBT GF20

Material and Finish:
Bronze, tinned

Product Specification:
—

Application Specification:
—

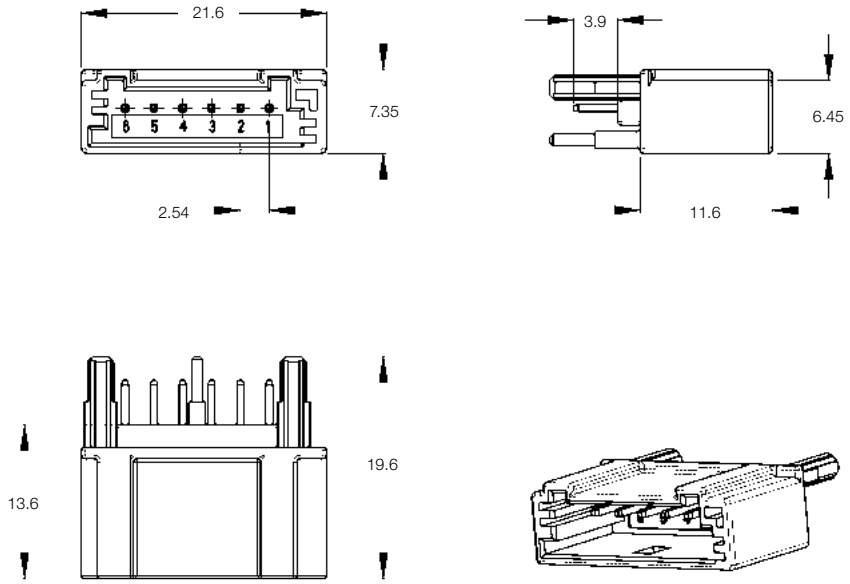

6 Position PCB Header

No. of Pos.	Keying Options	Housing Color	Part Numbers					
			PCB Header Right-Angle	PCB Header Vertical	Cover	Lever	Retainer Housing	Mating Receptacle Housing
6	–	Black	–	936640-2	–	–	–	–
		Gray	–	936640-3				

All specifications subject to change. Consult TE Connectivity for latest specifications.

Printed Circuit Board Headers

Technical Features

No. of Positions:
6 Position SMT

Housing Material:
PCT GF20

Material and Finish:
CuFe2, tinned

Product Specification:
—

Application Specification:
—

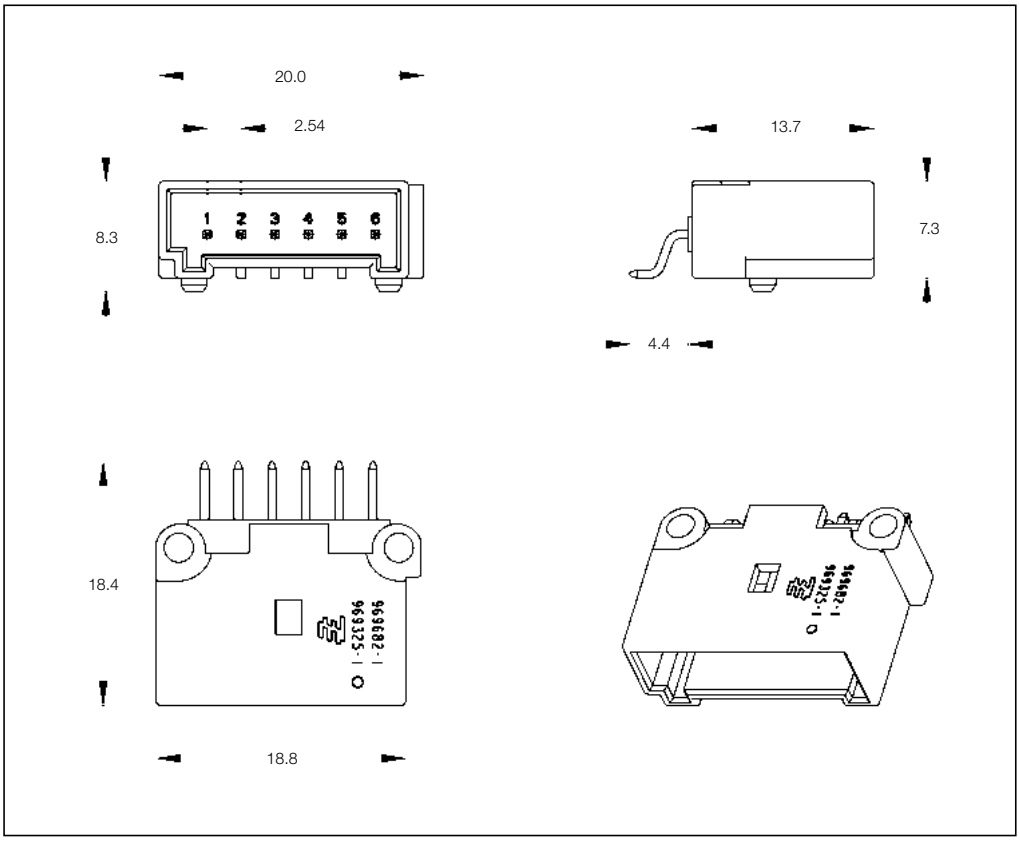

6 Position PCB Header SMT

No. of Pos.	Keying Options	Housing Color	Part Numbers					
			PCB Header Right-Angle	PCB Header Vertical	Cover	Lever	Retainer Housing	Mating Receptacle Housing
6	–	Black	–	969682-1	–	–	–	–

Receptacle Housings

Technical Features

No. of Positions:
8 Position Kit

Housing Material:
PA66 GF/PBT GF

Wire Size Range:
0.20–0.75 mm^2

Product Specification:
108-20245

Application Specification:
—

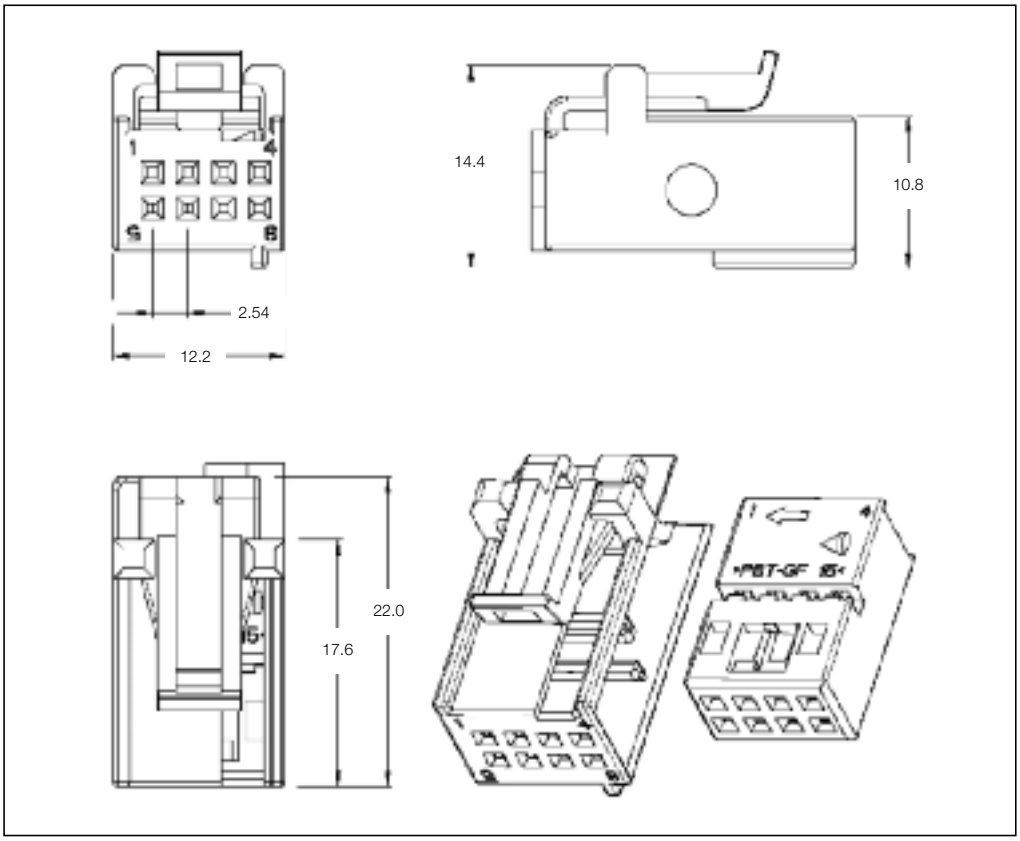

8 Position Receptacle Housings

No. of Pos.	Keying Options	Housing Color	Part Numbers							
			Receptacle Housing	Cover	Locking Device	Cover and Lever	Retainer Housing	Mating Pin Housing	Mating PCB Header Right-Angle	Mating PCB Header Vertical
8	–	Black	1745000-3 1745000-4	–	–	–	–	284869-1	–	–

Mating Pin Housing
See Page 3-58

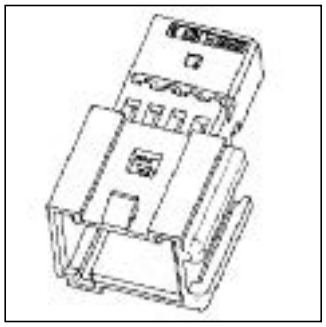

All specifications subject to change. Consult TE Connectivity for latest specifications.

Receptacle Housings

Technical Features

No. of Positions:
8 Positions

Housing Material:
PBT GF15

Wire Size Range:
0.20–0.75 mm^2

Product Specification:
—

Application Specification:
—

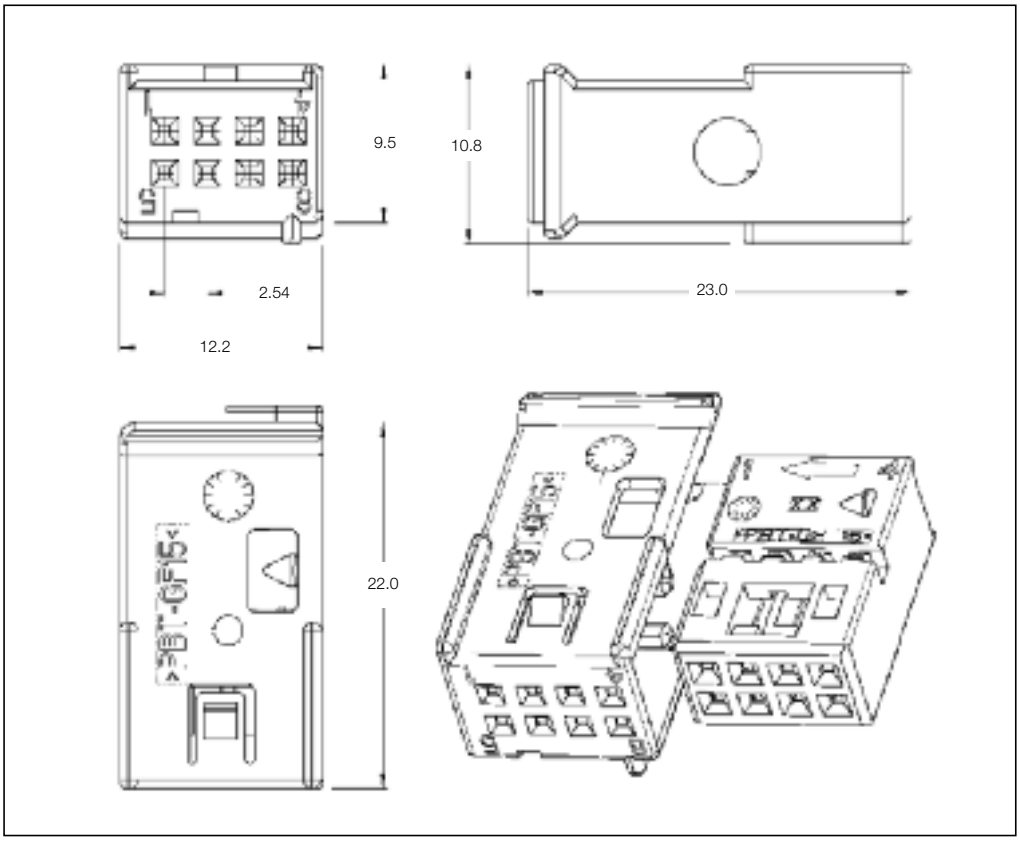

8 Position Receptacle Housings

No. of Pos.	Keying Options	Housing Color	Part Numbers						
			Receptacle Housing	Cover	Lever	Retainer Housing	Mating Pin Housing	Mating PCB Header Right-Angle	Mating PCB Header Vertical
8	–	Black	965601-2	1-1534013-1	–	–	1-1564012-3	–	–

Mating Pin Housing
See Page 3-59

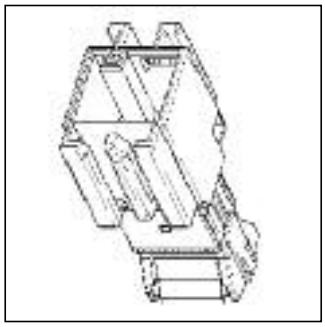

Receptacle Housings

3

Technical Features

No. of Positions:
8 Positions (2 × 4)

Housing Material:
PBT GF15

Wire Size Range:
0.35–0.75 mm²

Product Specification:
108-18411-1

Application Specification:
—

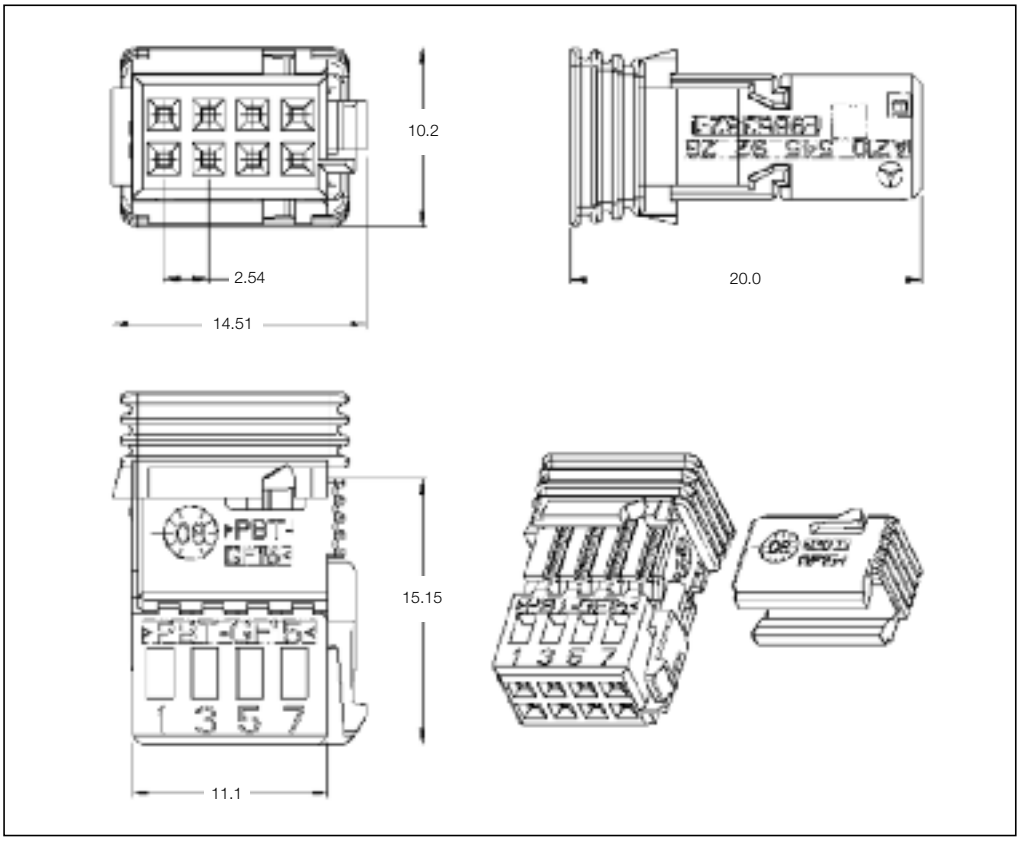

8 Position Receptacle Housings

No. of Pos.	Keying Options	Housing Color	Part Numbers							
			Receptacle Housing	Cover	Locking Device	Cover and Lever	Retainer Housing	Mating Pin Housing	Mating PCB Header Right-Angle	Mating PCB Header Vertical
8	Z	Dark Blue	9-965382-2	–	965383-1	–	–	–	–	–

All specifications subject to change. Consult TE Connectivity for latest specifications.

Receptacle Housings

Technical Features

No. of Positions:
8 Positions

Housing Material:
PBT GF10

Wire Size Range:
0.20–0.75 mm^2

Product Specification:
—

Application Specification:
—

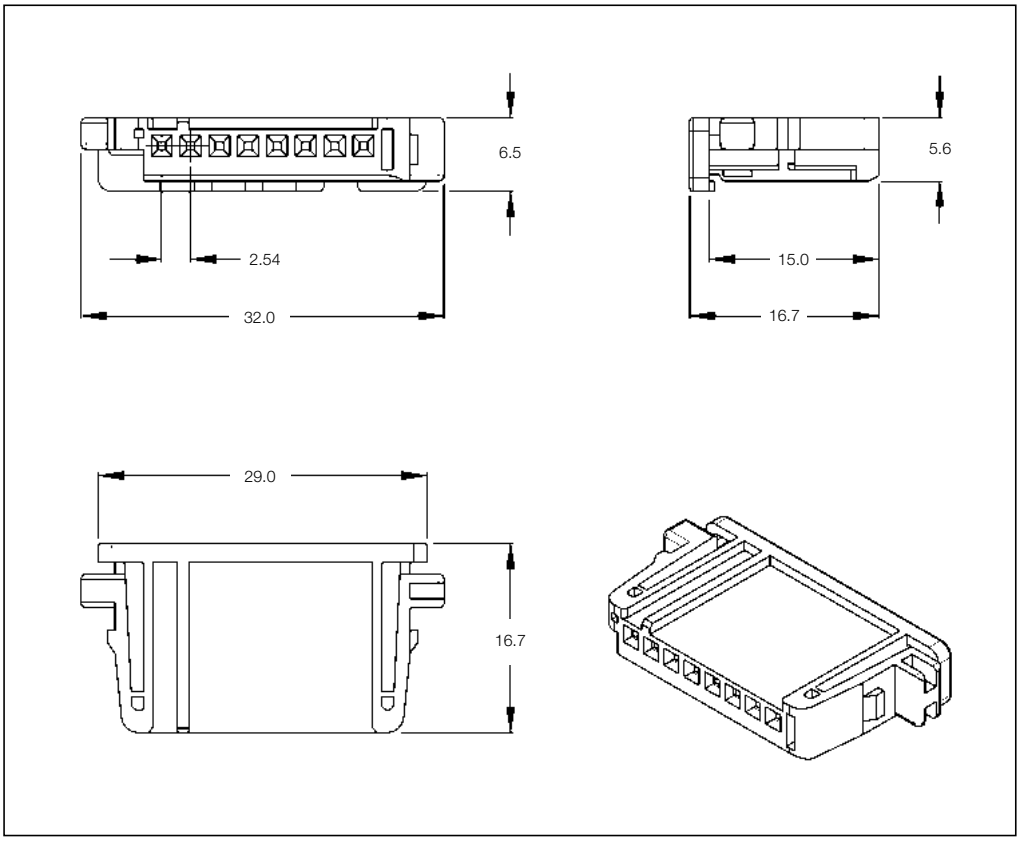

8 Position Receptacle Housings

No. of Pos.	Keying Options	Housing Color	Part Numbers						
			Receptacle Housing	Cover	Lever	Retainer Housing	Mating Pin Housing	Mating PCB Header Right-Angle	Mating PCB Header Vertical
8	A	Natural	1743282-1	–	–	–	–	–	–
	B	Black	1-1743282-2						
	B	Gray	1-1743282-3						
	B	Red	1-1743282-6						

Pin Housings

Technical Features

No. of Positions:
8 Position Kit

Housing Material:
PBT GF

Wire Size Range:
0.75 mm^2 FR Max.

Product Specification:
—

Application Specification:
—

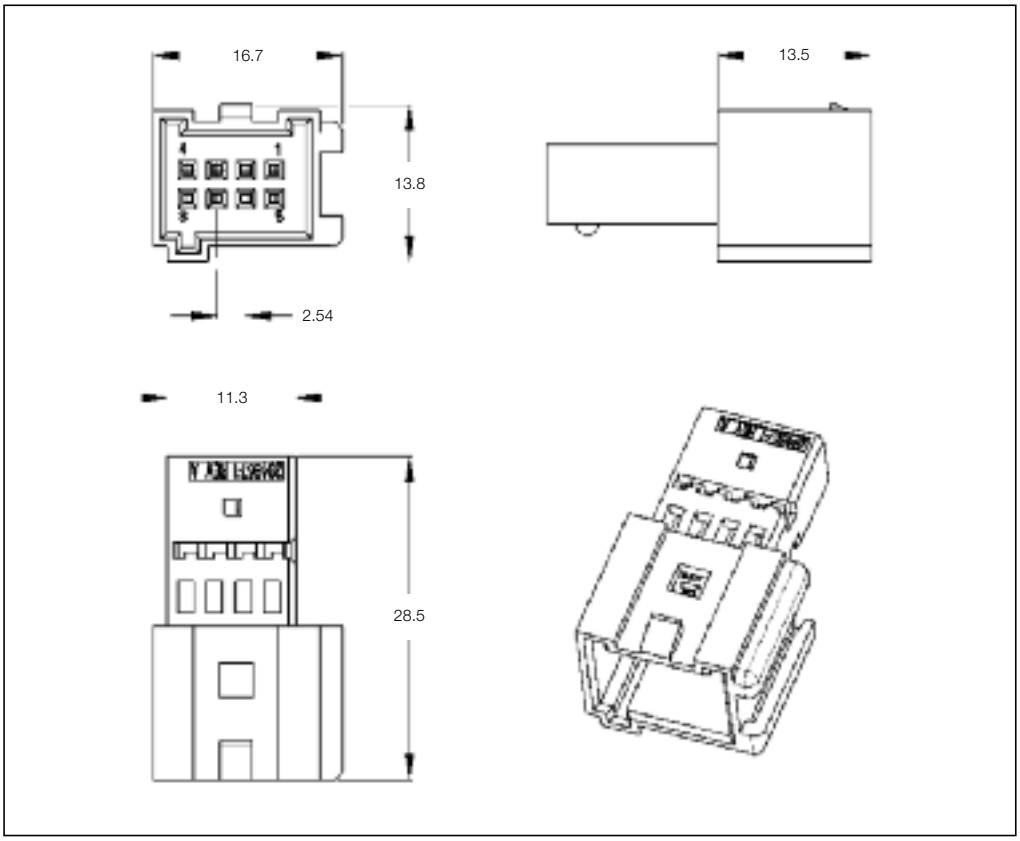

8 Position Pin Housing

No. of Pos.	Keying Options	Housing Color	Part Numbers					
			Pin Housing	Cover	Locking Device	Cover and Lever	Retainer Housing	Mating Receptacle Housing
8	–	Black	284869-1	–	–	–	–	1745000-1

Mating Receptacle Housing
See Page 3-54

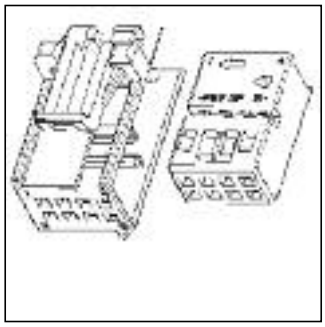

All specifications subject to change. Consult TE Connectivity for latest specifications.

Pin Housings

Technical Features

No. of Positions:
8 Positions
for Flex Foil Application

Housing Material:
PBT GF10

Wire Size Range:
0.20–0.75 mm^2

Product Specification:
108-18808-1

Application Specification:
—

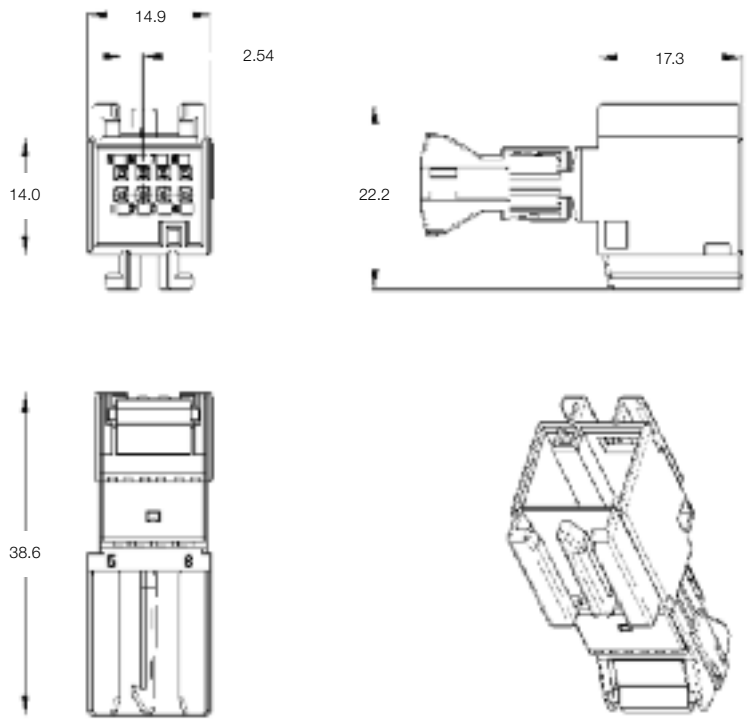

8 Position Pin Housing

No. of Pos.	Keying Options	Housing Color	Part Numbers				
			Pin Housing	Cover	Lever	Retainer Housing	Mating Receptacle Housing
8	–	Black	1-1564012-3	–	–	–	965601-2 1-1564013-1

Mating Receptacle Housing
See Page 3-55

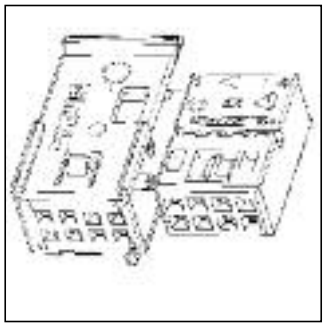

Printed Circuit Board Headers

Technical Features

No. of Positions:
8 Positions

Housing Material:
PBT GF20

Material and Finish:
CuFe2, tinned

Product Specification:
—

Application Specification:
—

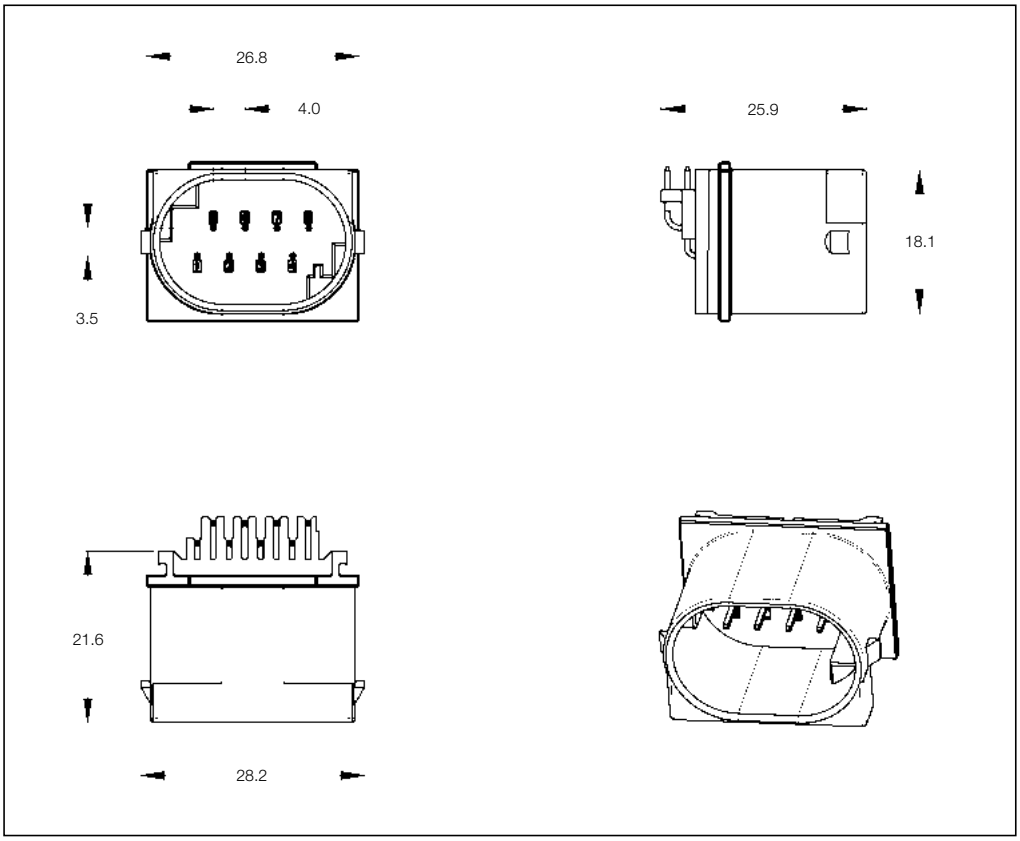

8 Position PCB Header

No. of Pos.	Keying Options	Housing Color	Part Numbers					
			PCB Header Right-Angle	PCB Header Vertical	Cover	Lever	Retainer Housing	Mating Receptacle Housing
8	–	Black	1-967658-1	–	–	–	–	–

All specifications subject to change. Consult TE Connectivity for latest specifications.

Printed Circuit Board Headers

Technical Features

No. of Positions:
8 Positions

Housing Material:
PBT GF15

Material and Finish:
Copper Alloy, tinned

Product Specification:
—

Application Specification:
—

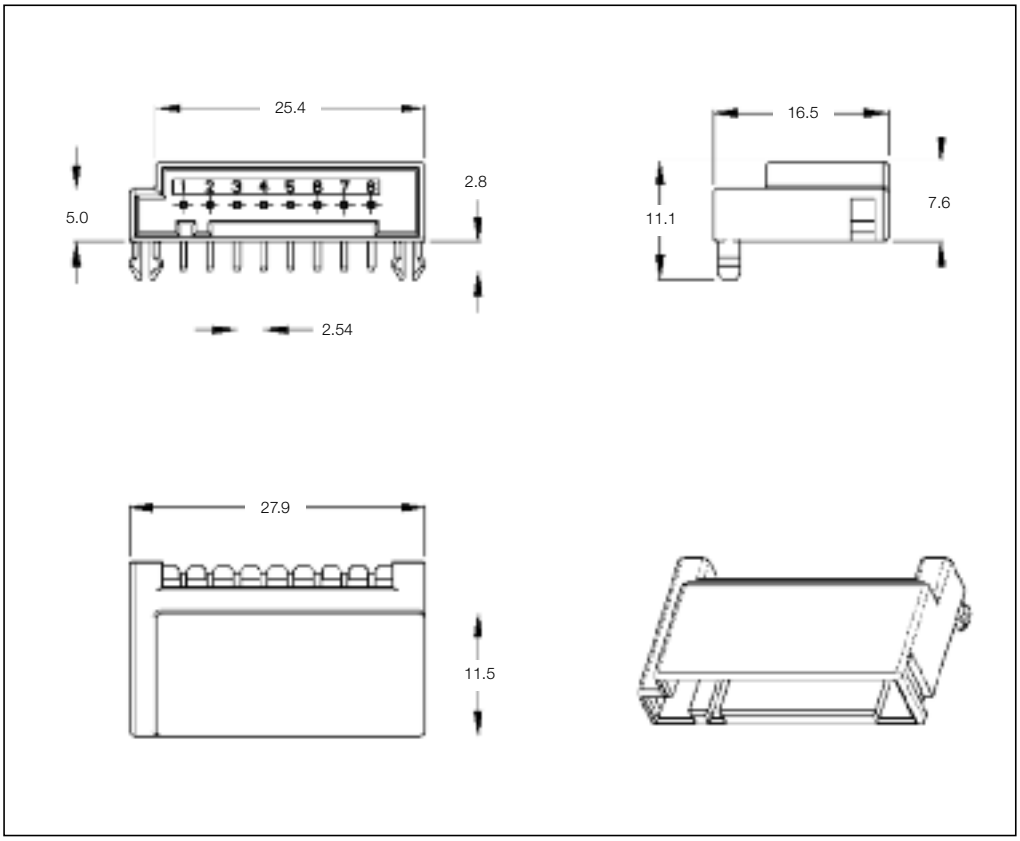

8 Position PCB Header

No. of Pos.	Keying Options	Housing Color	Part Numbers					
			PCB Header Right-Angle	PCB Header Vertical	Cover	Lever	Retainer Housing	Mating Receptacle Housing
8	–	Natural	1743284-1	–	–	–	–	–
		Black	1-1743284-2	–				
		Gray	1-1743284-3	–				
		Red	1-1743284-6	–				

3

Technical Features

No. of Positions:
8 Positions

Housing Material:
PBT GF15

Material and Finish:
Bronze, tinned

Product Specification:
—

Application Specification:
—

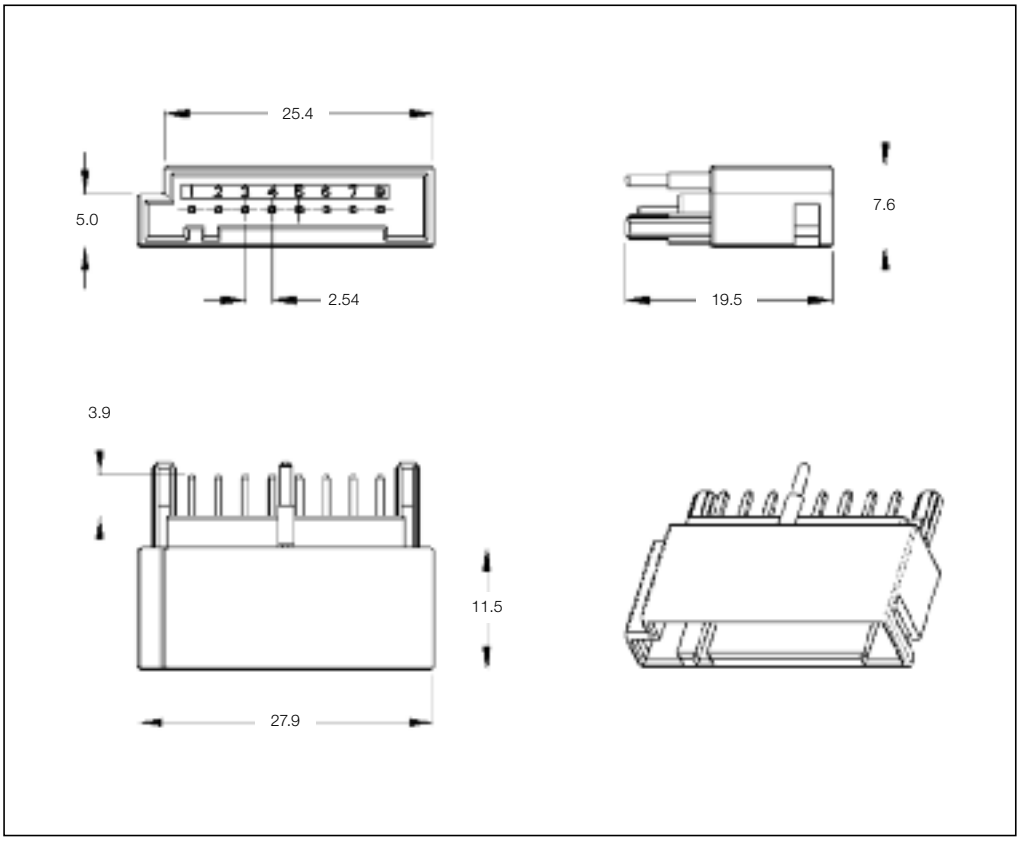

8 Position PCB Header

No. of Pos.	Keying Options	Housing Color	Part Numbers					
			PCB Header Right-Angle	PCB Header Vertical	Cover	Lever	Retainer Housing	Mating Receptacle Housing
8	–	Natural	–	1743386-1	–	–	–	–
		Black	–	1-1743386-2				
		Gray	–	1-1743386-3				
		Red	–	1-1743386-6				

All specifications subject to change. Consult TE Connectivity for latest specifications.

Pin Housings

Technical Features

No. of Positions:
9 Positions

Housing Material:
PA66

Wire Size Range:
0.20–0.75 mm^2

Product Specification:
—

Application Specification:
—

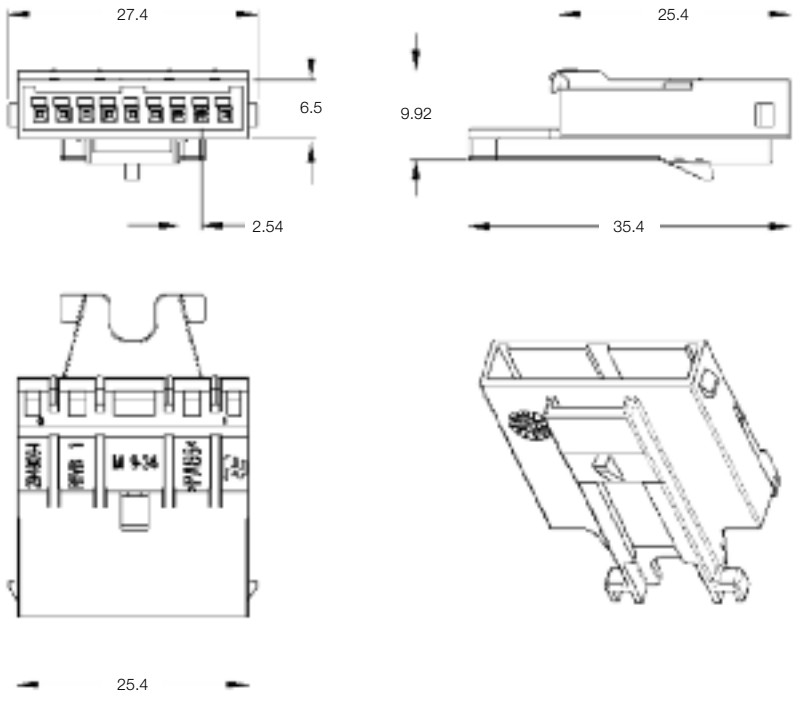

9 Position Pin Housing

No. of Pos.	Keying Options	Housing Color	Part Numbers				
			Pin Housing	Cover	Lever	Retainer Housing	Mating Receptacle Housing
9	–	Black	284803-1	–	–	–	–

Receptacle Housings

3

Technical Features

No. of Positions:
10 Positions (2 × 5)

Housing Material:
PBT GF15

Wire Size Range:
0.14–0.75 mm²

Product Specification:
108-18924

Application Specification:
114-18630

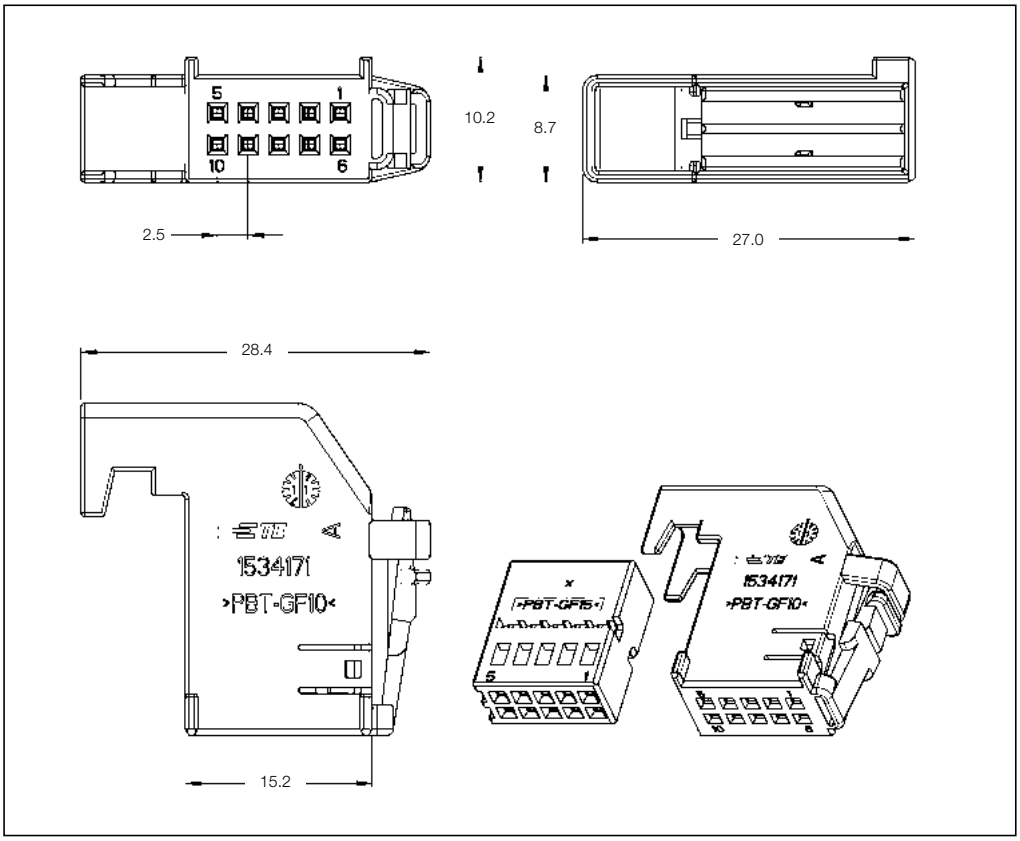

10 Position Receptacle Housings

No. of Pos.	Keying Options	Housing Color	Part Numbers							
			Receptacle Housing	Cover	Locking Device	Cover and Lever	Retainer Housing	Mating Pin Housing	Mating PCB Header Right-Angle	Mating PCB Header Vertical
10	–	Black	1534125-1	1-1534171-1	–	–	–	–	–	969587-1

All specifications subject to change. Consult TE Connectivity for latest specifications.

Receptacle Housings

Technical Features

No. of Positions:
10 Position for Header with Shorting Bars

Housing Material:
PBT GF10

Wire Size Range:
0.20–0.75 mm^2

Product Specification:
—

Application Specification:
—

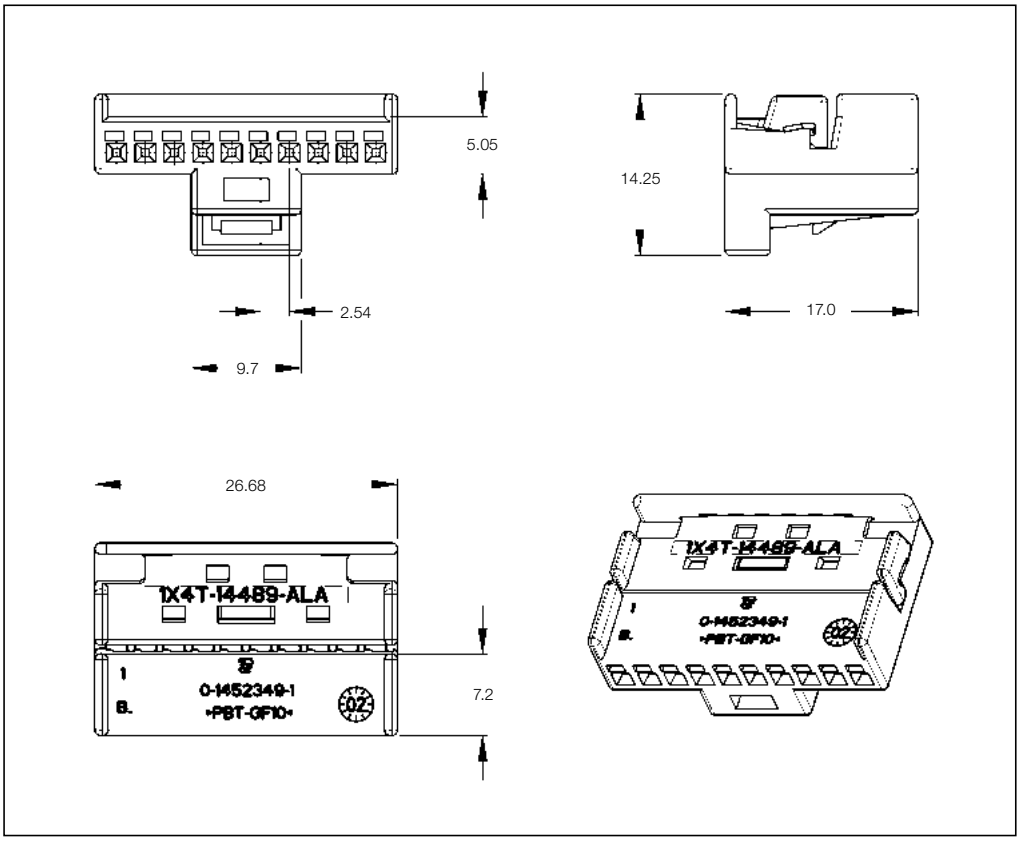

10 Position Receptacle Housings

No. of Pos.	Keying Options	Housing Color	Part Numbers						
			Receptacle Housing	Cover	Lever	Retainer Housing	Mating Pin Housing	Mating PCB Header Right-Angle	Mating PCB Header Vertical
10	–	Natural	1452349-1	–	–	–	–	–	–

Receptacle Housings

3

Technical Features

No. of Positions:
10 Positions

Housing Material:
PBT GF10

Wire Size Range:
0.20–0.75 mm^2

Product Specification:
108-18507

Application Specification:
—

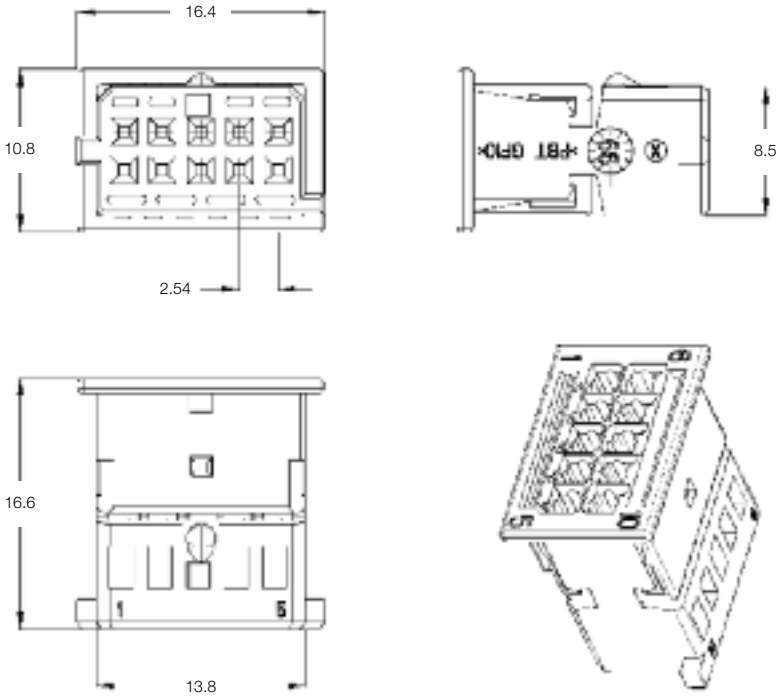

10 Position Receptacle Housings

No. of Pos.	Keying Options	Housing Color	Part Numbers						
			Receptacle Housing	Cover	Lever	Retainer Housing	Mating Pin Housing	Mating PCB Header Right-Angle	Mating PCB Header Vertical
10	A	Black	1-968636-2	–	–	–	–	–	–
	B	Natural	2-968636-2						
	C	Blue	3-968636-2						
	D	Violet	4-968636-2						

All specifications subject to change. Consult TE Connectivity for latest specifications.

Receptacle Housings

Technical Features

No. of Positions:
10 Positions (2 × 5)

Housing Material:
PBT GF15

Wire Size Range:
0.20–0.75 mm²

Product Specification:
108-18590-0

Application Specification:
114-13143

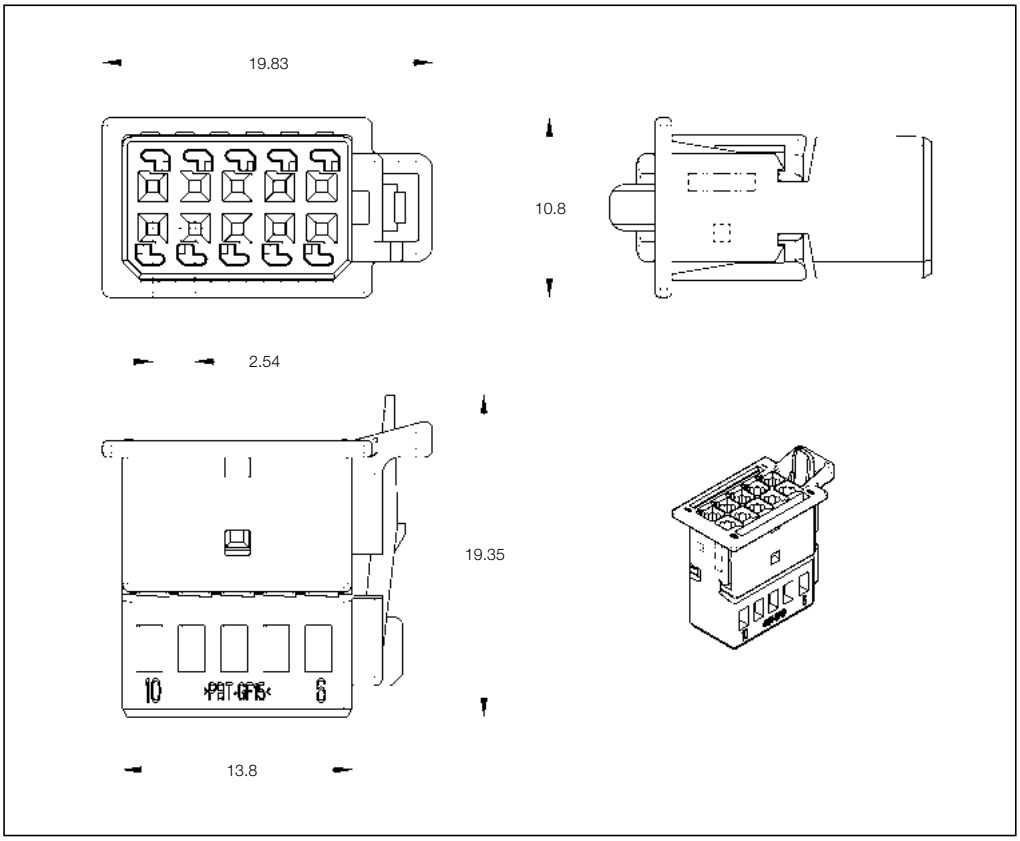

10 Position Receptacle Housings

No. of Pos.	Keying Options	Housing Color	Part Numbers						
			Receptacle Housing	Cover	Lever	Retainer Housing	Mating Pin Housing	Mating PCB Header Right-Angle	Mating PCB Header Vertical
10	A	Black	1488973-1	–	–	–	–	–	–
	B	Black	1488973-2						

3

Technical Features

No. of Positions:
10 Positions with ACTION PIN

Housing Material:
PET GF30

Material and Finish:
CuNiSi, tinned

Product Specification:
—

Application Specification:
—

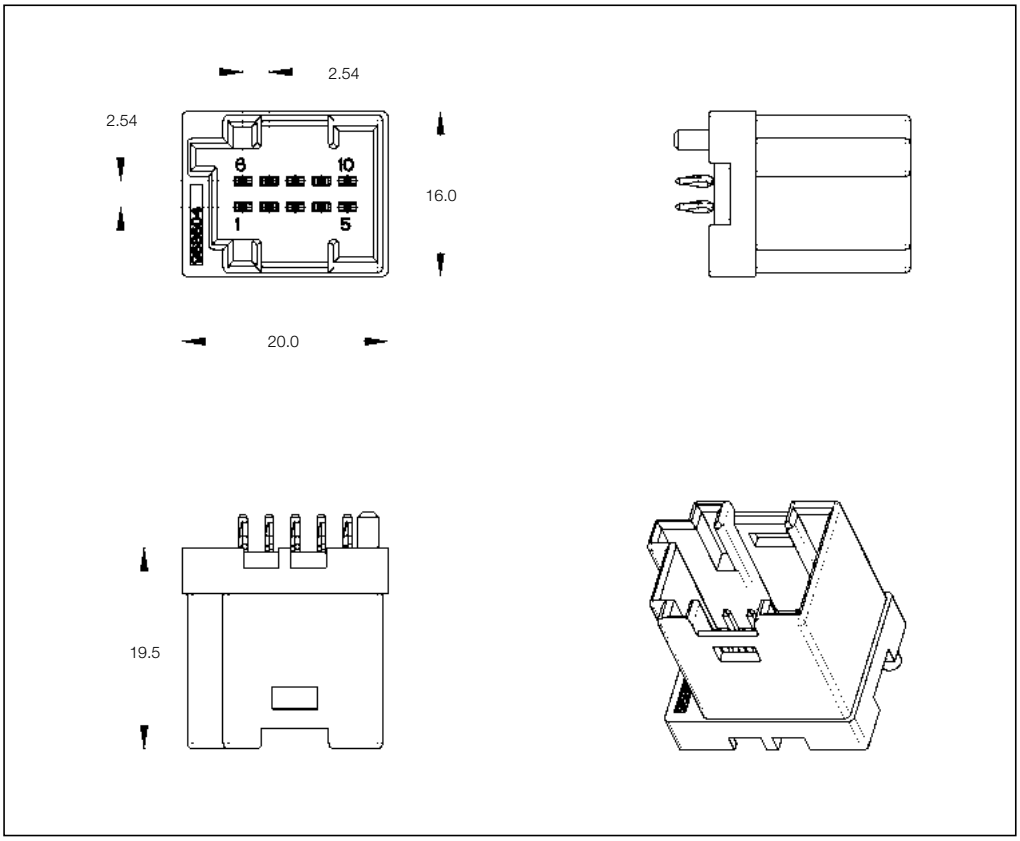

10 Position PCB Header with ACTION PIN

No. of Pos.	Keying Options	Housing Color	Part Numbers					
			PCB Header Right-Angle	PCB Header Vertical	Cover	Lever	Retainer Housing	Mating Receptacle Housing
10	–	Black	–	967741-1	–	–	–	–
		Natural	–	967741-2				

All specifications subject to change. Consult TE Connectivity for latest specifications.

Receptacle Housings

Technical Features

No. of Positions:
12 Positions (2 × 6)

Housing Material:
PBT GF15

Wire Size Range:
0.14–0.75 mm²

Product Specification:
108-18924

Application Specification:
114-18630

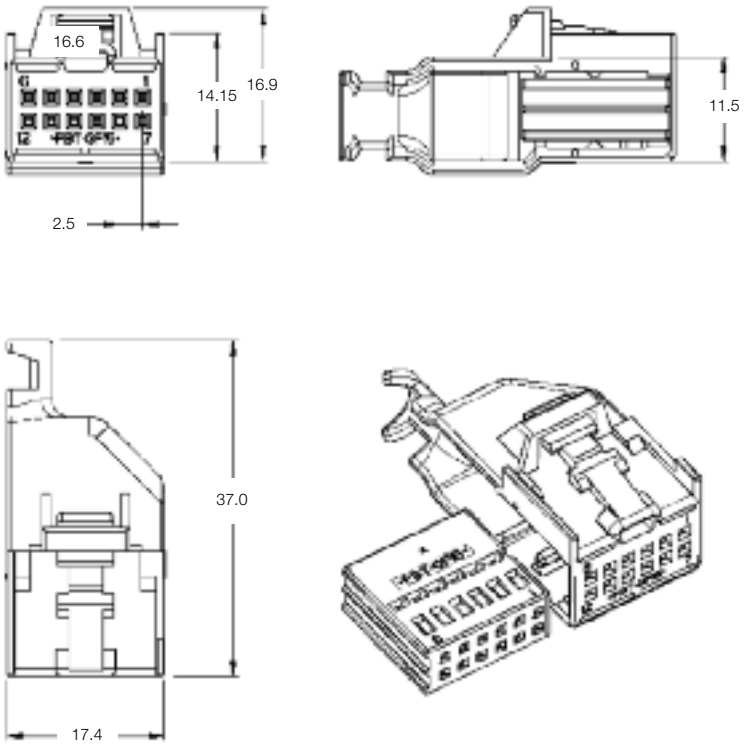

12 Position Receptacle Housings

No. of Pos.	Keying Options	Housing Color	Part Numbers							
			Receptacle Housing	Cover	Locking Device	Cover and Lever	Retainer Housing	Mating Pin Housing	Mating PCB Header Right-Angle	Mating PCB Header Vertical
12	A	Black	1534100-1	1-1534096-1 (Cod A black) 1-1534096-2 (Cod B brown)	–	–	–	–	967250-1 –	–

Mating Header
See Page 4-8

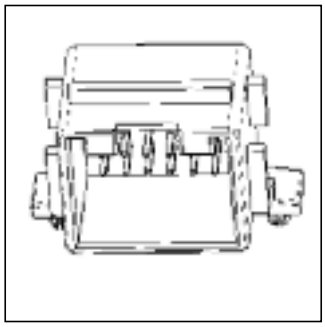

Receptacle Housings

Technical Features

No. of Positions:
12 Positions

Housing Material:
PBT GF20

Wire Size Range:
0.20–0.75 mm^2

Product Specification:
108-18546-0

Application Specification:
114-18173-0

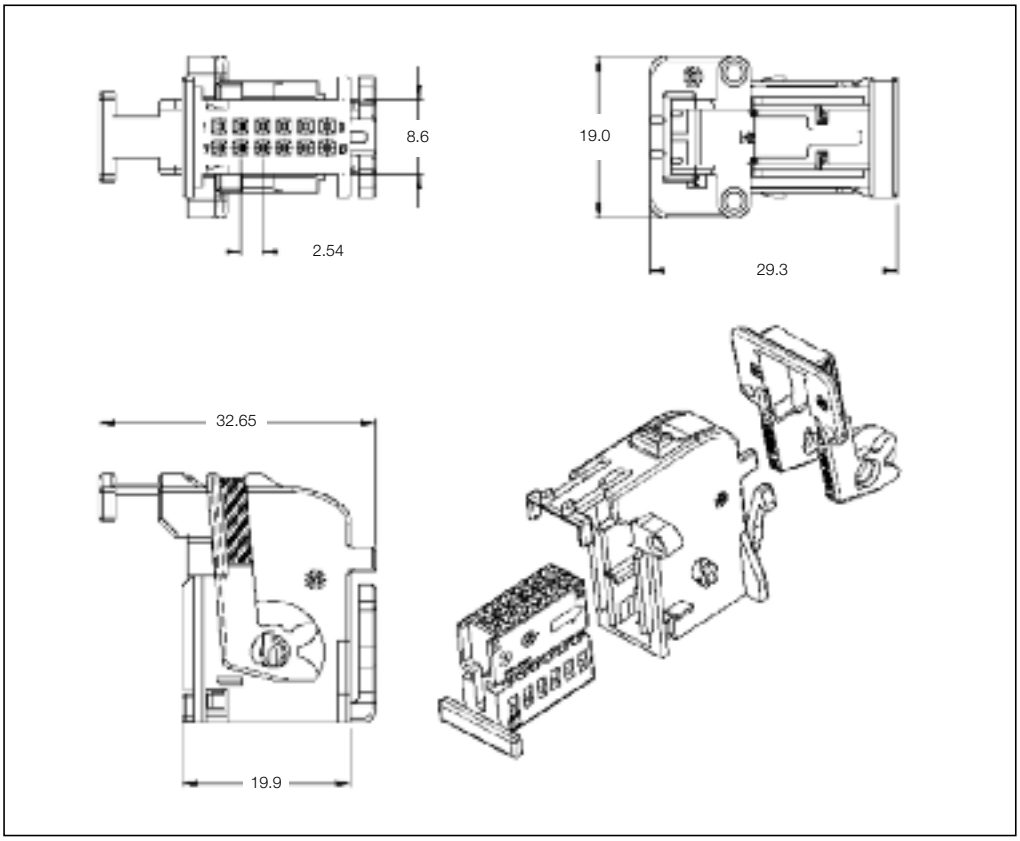

12 Position Receptacle Housings

No. of Pos.	Keying Options	Housing Color	Part Numbers							
			Receptacle Housing	Cover	Locking Device	Cover and Lever	Retainer Housing	Mating Pin Housing	Mating PCB Header Right-Angle	Mating PCB Header Vertical
12	–	Black	968473-1	–	–	929051-1	–	–	1355505-1	

Mating Header
See Page 4-9

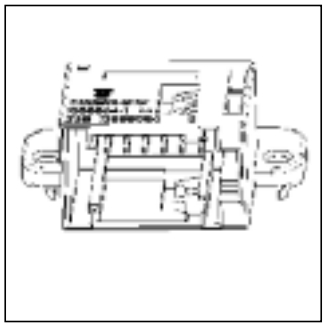

All specifications subject to change. Consult TE Connectivity for latest specifications.

Receptacle Housings

Technical Features

No. of Positions:
12 Positions (2nd Generation)

Housing Material:
PBT GF20

Wire Size Range:
0.35–0.75 mm^2

Product Specification:
108-15261 Receptacle Housing
108-15039 } Cover and Lever
108-15139 }

Application Specification:
411-15653 Receptacle Housing
411-15554 } Cover and Lever
411-15565 }

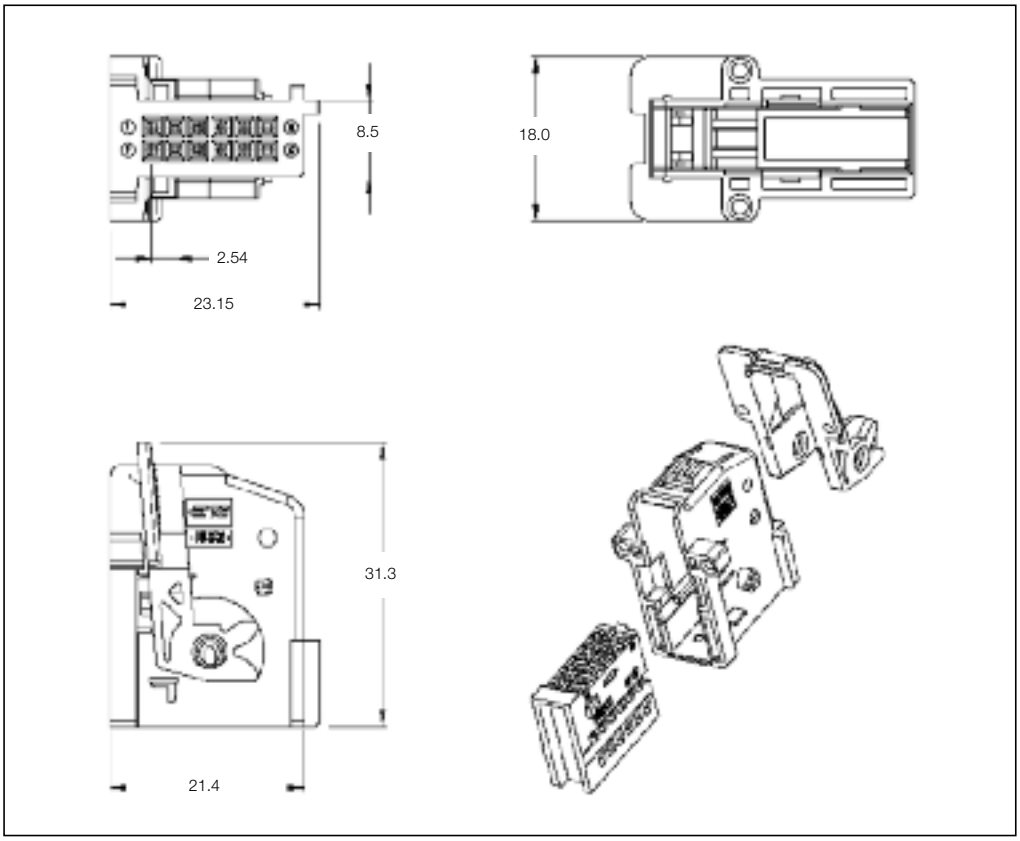

12 Position Receptacle Housings

No. of Pos.	Keying Options	Housing Color	Part Numbers							
			Receptacle Housing	Cover	Locking Device	Cover and Lever	Retainer Housing	Mating Pin Housing	Mating PCB Header Right-Angle	Mating PCB Header Vertical
12	–	Black	1379219-1	–	–	1379095-1 (Brown)	–	–	185740-1 1379030-1	953130-1 1379114-1
						1379095-2 (Blue)				
						1379096-3 (Black)				
						1379096-1 (Brown/Wire Output 90°)			For application see customer drawing	
						1379096-2 (Blue/Wire Output 90°)				
						1379096-3 (Black/Wire Output 90°)				

Mating Header
See Page 4-10–4-13

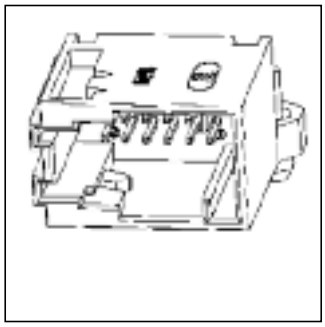

Receptacle Housings

Technical Features

No. of Positions:
12 Positions (1st Generation)

Housing Material:
PBT GF20

Wire Size Range:
0.35–0.75 mm^2

Product Specification:
108-15139

Application Specification:
411-15565

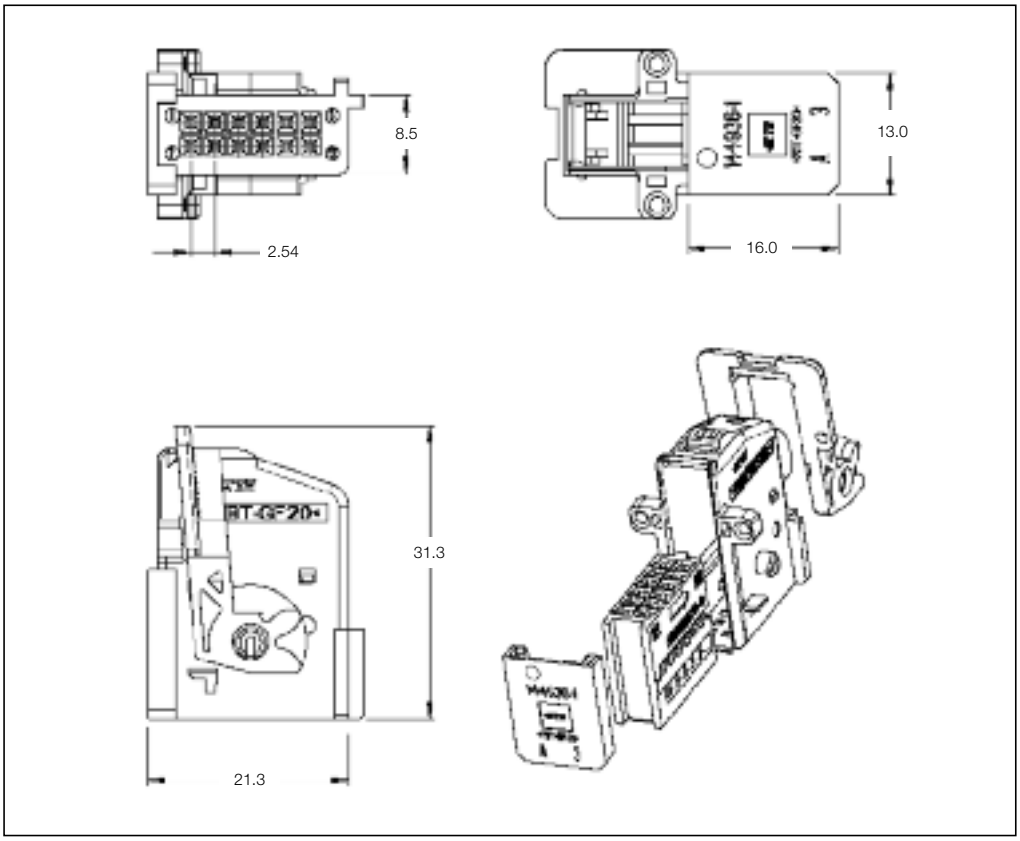

12 Position Receptacle Housings

No. of Pos.	Keying Options	Housing Color	Part Numbers							
			Receptacle Housing	Cover	Locking Device	Cover and Lever	Retainer Housing	Mating Pin Housing	Mating PCB Header Right-Angle	Mating PCB Header Vertical
12	–	Black	185300-1	–	144936-1	–	–	–	185740-1	953130-1 1379114-1
		Brown	–	–	–	185341-1 (Wire Output 0°)				
		Blue	–	–	–	185341-2 (Wire Output 0°)			185740-3 1379030-3	953130-3 1379114-3
		Brown	–	–	–	185343-1 (Wire Output 90°)			For application see customer drawing	
		Blue	–	–	–	185343-2 (Wire Output 90°)				

Mating Header
See Page 4-10–4-13

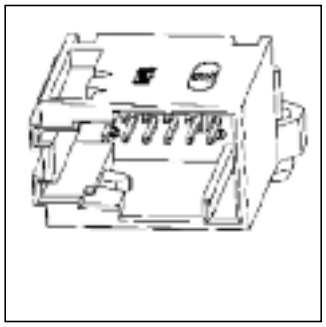

All specifications subject to change. Consult TE Connectivity for latest specifications.

Receptacle Housings

Technical Features

Application:
Steering Switch

No. of Positions:
12 Positions

Housing Material:
PA66 GF13

Wire Size Range:
0.35–0.75 mm^2

Product Specification:
108-20221

Application Specification:
—

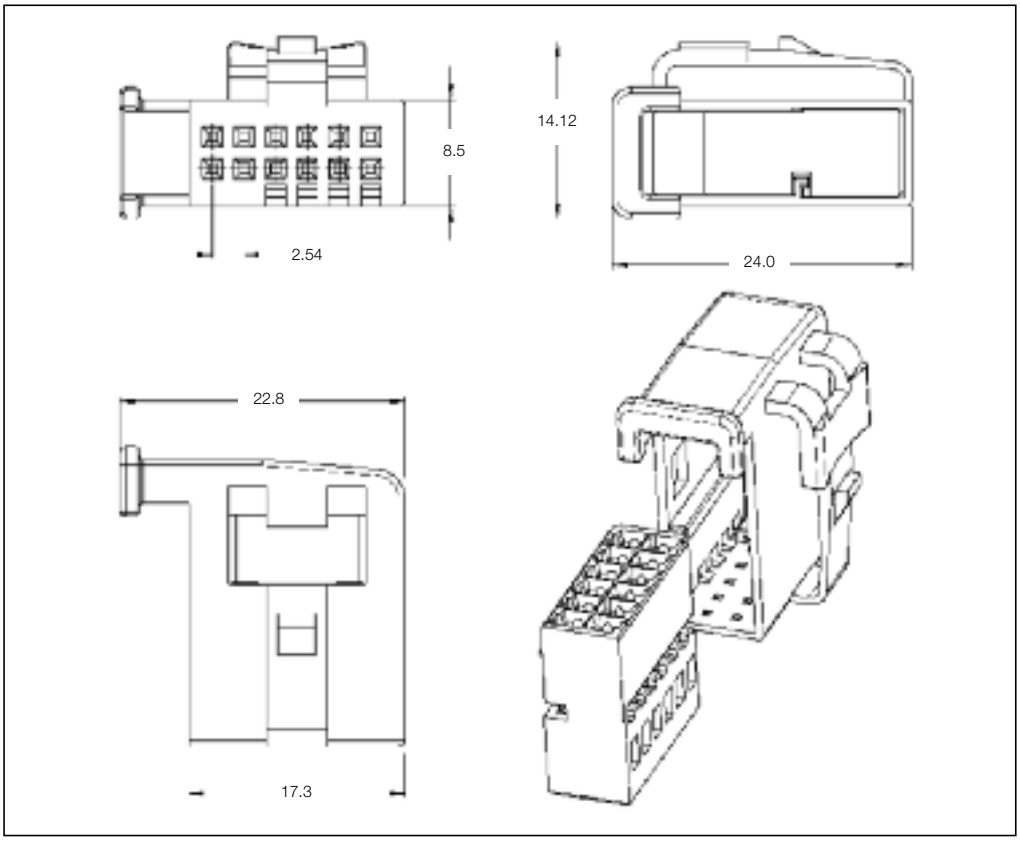

12 Position Receptacle Housings

No. of Pos.	Keying Options	Housing Color	Part Numbers							
			Receptacle Housing	Cover	Locking Device	Cover and Lever	Retainer Housing	Mating Pin Housing	Mating PCB Header Right-Angle	Mating PCB Header Vertical
12	–	Black	284322-1	284321-1	–	–	–	–	–	–

Receptacle Housings

Technical Features

No. of Positions:
12 Positions

Housing Material:
PA66 GF

Wire Size Range:
0.35–0.75 mm^2

Product Specification:
108-20222

Application Specification:
411-15565

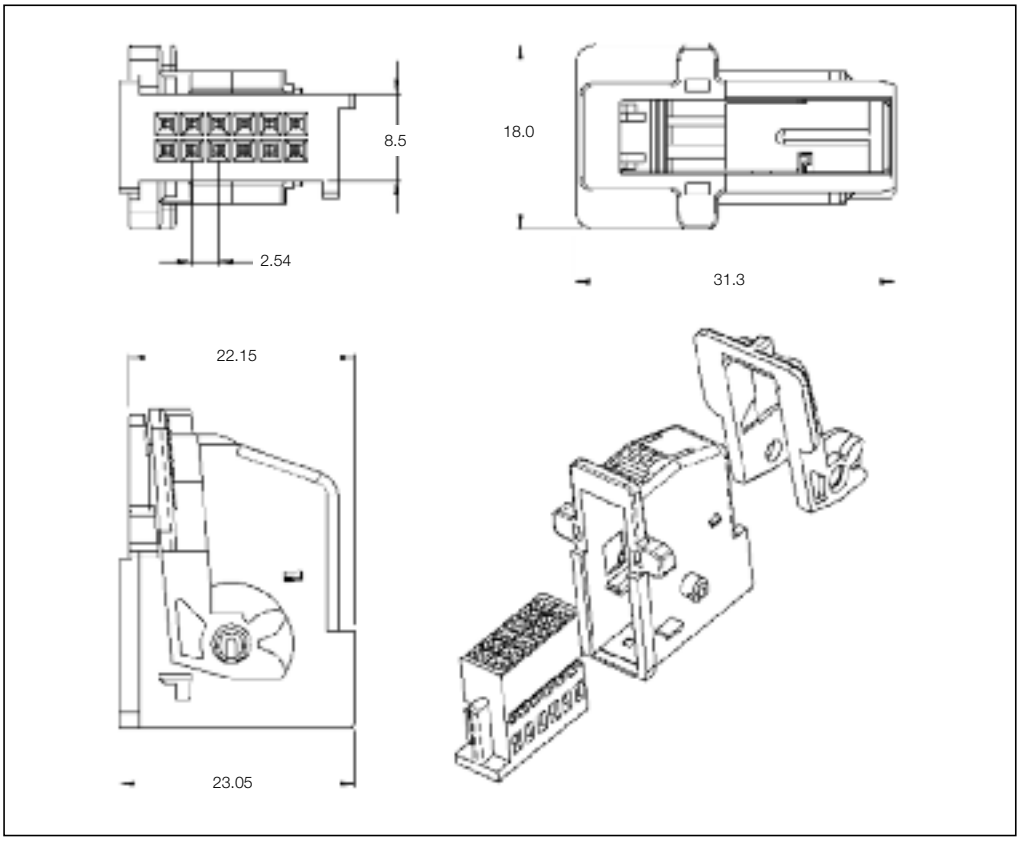

12 Position Receptacle Housings

No. of Pos.	Keying Options	Housing Color	Part Numbers							
			Receptacle Housing	Cover	Locking Device	Cover and Lever	Retainer Housing	Mating Pin Housing	Mating PCB Header Right-Angle	Mating PCB Header Vertical
12	1	Black	284442-1	–	–	284443-1 & -4	–	–	–	–
	2	Blue	–	–	–	284443-2 & -5				
	3	Brown	–	–	–	284443-3 & -6				

All specifications subject to change. Consult TE Connectivity for latest specifications.

Pin Housings

Technical Features

No. of Positions:
12 Positions

Housing Material:
PBT GF10

Wire Size Range:
0.20–0.75 mm^2

Product Specification:
—

Application Specification:
—

Product Drawing:
1534842

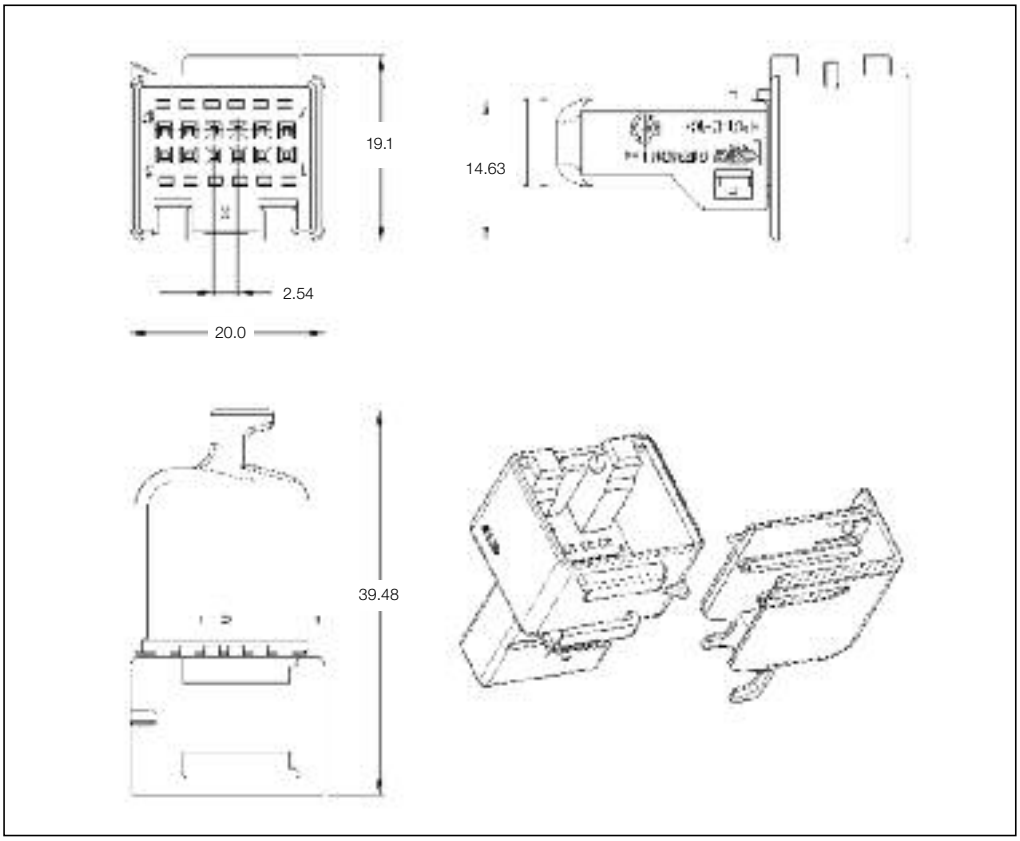

12 Position Pin Housing

No. of Pos.	Keying Options	Housing Color	Part Numbers				
			Pin Housing	Cover	Lever	Retainer Housing	Mating Receptacle Housing
12	A	Black	1-1534840-1	1534841-1	–	–	1534100-1 + 1534193 or 1534196

Printed Circuit Board Headers

Technical Features

No. of Positions:
12 Position Assembly (2 × 6)

Housing Material:
PBT GF15

Material and Finish:
CuSn, tin plated

Product Specification:
108-18692-0

Application Specification:
—

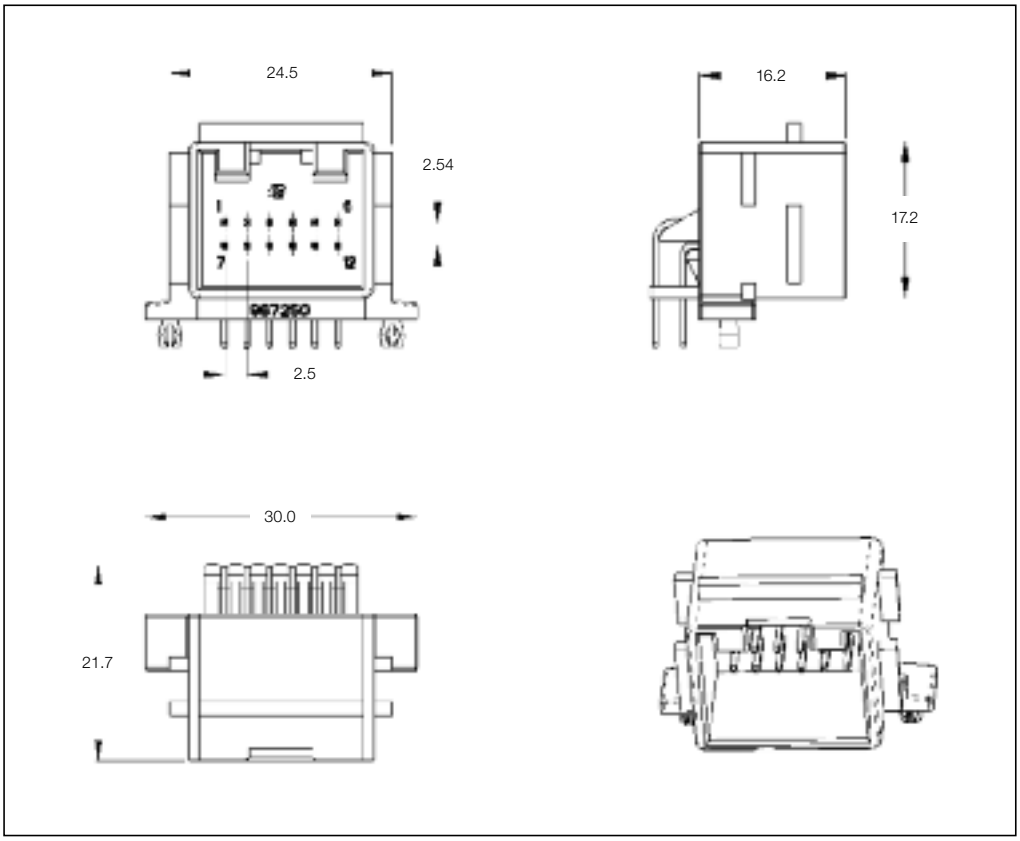

12 Position PCB Header

No. of Pos.	Keying Options	Housing Color	Part Numbers					
			PCB Header Right-Angle	PCB Header Vertical	Cover	Cover and Lever	Retainer Housing	Mating Receptacle Housing
12	–	Black	967250-1	–	–	–	–	1534100-1

Mating Receptacle Housing
See Page 4-1

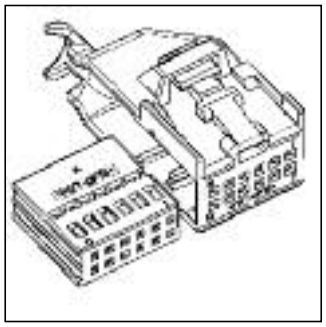

All specifications subject to change. Consult TE Connectivity for latest specifications.

Printed Circuit Board Headers

Technical Features

No. of Positions:
12 Positions

Housing Material:
PA66 GF10 + GF20

Material and Finish:
CuSn, tin plated

Product Specification:
108-18671-0

Application Specification:
114-18314-0

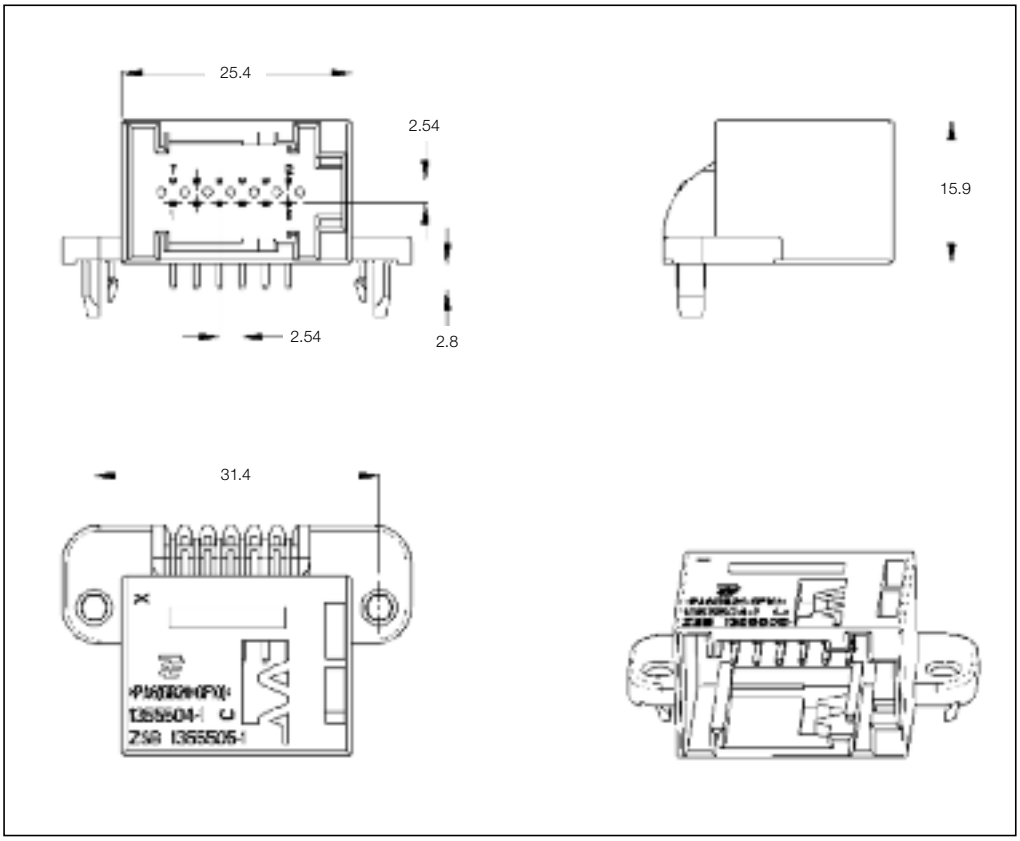

12 Position PCB Header

No. of Pos.	Keying Options	Housing Color	Part Numbers					
			PCB Header Right-Angle	PCB Header Vertical	Cover	Cover and Lever	Retainer Housing	Mating Receptacle Housing
12	Z	Black	1355505-1	–	–	–	–	968473-1
	B	Light-Gray	1355505-3	–				
	B	Light-Gray	1355505-4*	–				

*) **Material:** CuSn + CuFe.

Mating Receptacle Housing
See Page 4-2

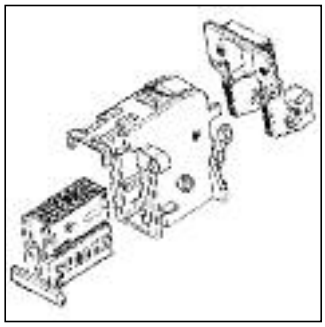

Printed Circuit Board Headers

Technical Features

No. of Positions:
12 Positions with Board Locks

Housing Material:
PBT GF20

Material and Finish:
CuSn6, post tin

Product Specification:
108-15180

Application Specification:
—

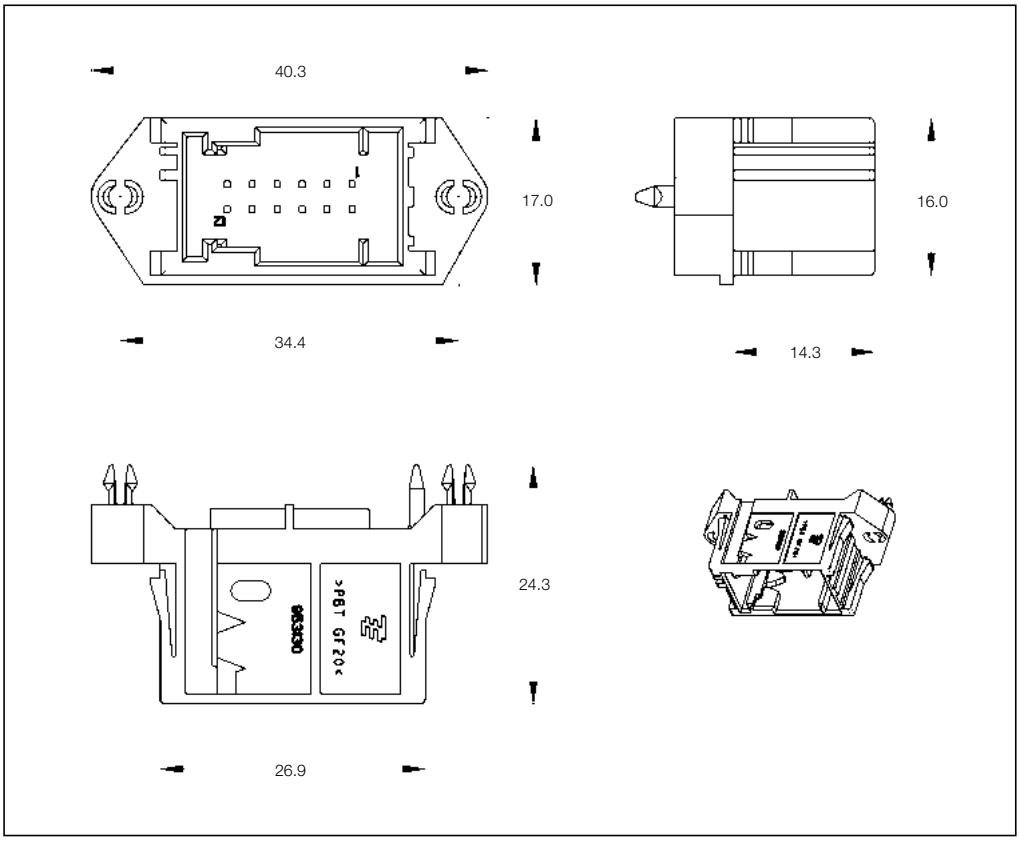

12 Position PCB Header with Board Locks

No. of Pos.	Keying Options	Housing Color	Part Numbers					
			PCB Header Right-Angle	PCB Header Vertical	Cover	Lever	Retainer Housing	Mating Receptacle Housing
12	–	Black	–	953130-1	–	–	–	185300-1 or 1379219-1
		Blue	–	953130-2				
		Brown	–	953130-3				

Mating Receptacle Housing
See Page 4-3–4-4

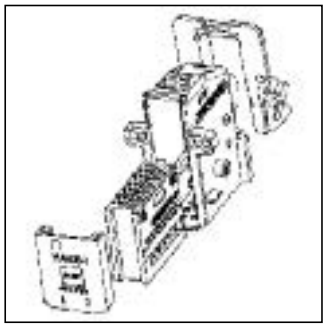

All specifications subject to change. Consult TE Connectivity for latest specifications.

Printed Circuit Board Headers

Technical Features

No. of Positions:
12 Positions

Housing Material:
SPS GF20

Material and Finish:
CuSn6, post tin

Product Specification:
108-15180

Application Specification:
—

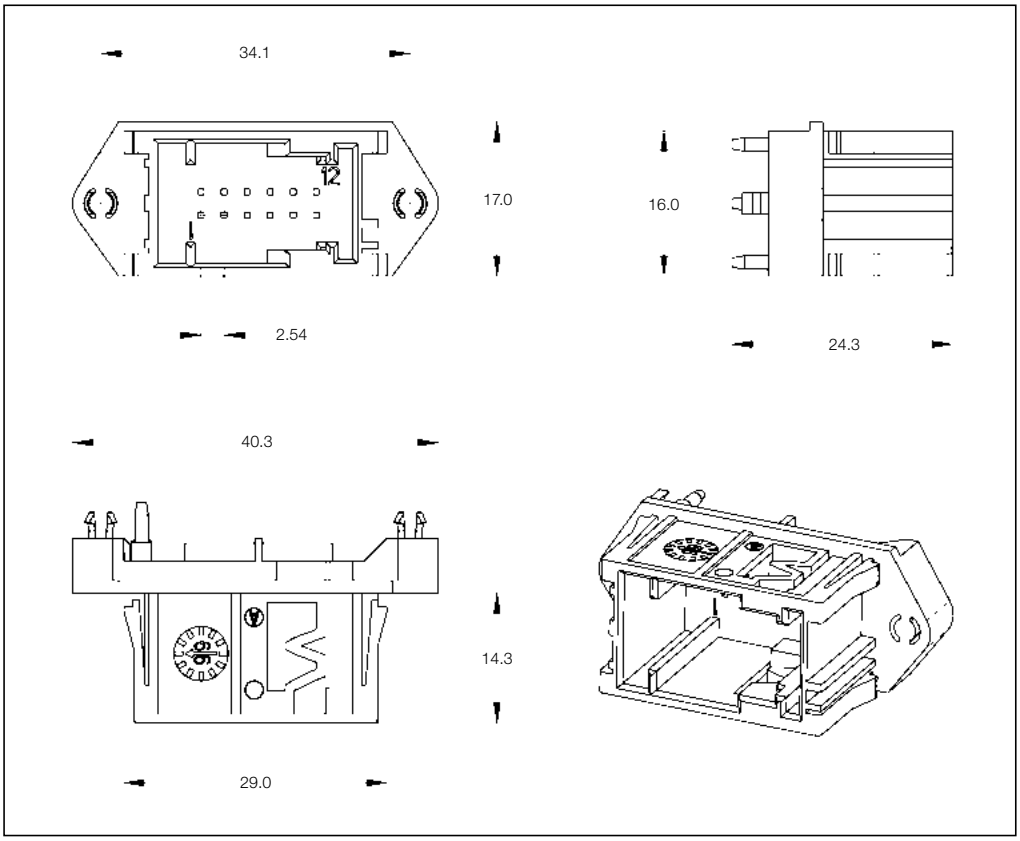

12 Position PCB Header

No. of Pos.	Keying Options	Housing Color	Part Numbers					
			PCB Header Right-Angle	PCB Header Vertical	Cover	Lever	Retainer Housing	Mating Receptacle Housing
12	–	Black	–	1379114-1	–	–	–	185300-1 or 1379219-1
		Blue	–	1379114-2				
		Brown	–	1379114-3				

Mating Receptacle Housing
See Page 4-3–4-4

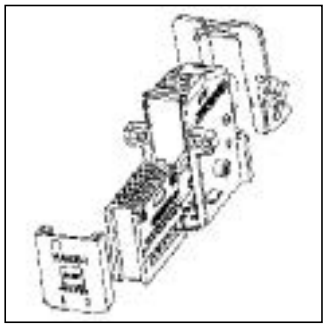

Printed Circuit Board Headers

Technical Features

No. of Positions:
12 Positions with Board Locks

Housing Material:
SPS GF20

Material and Finish:
See customer drawing

Product Specification:
—

Application Specification:
—

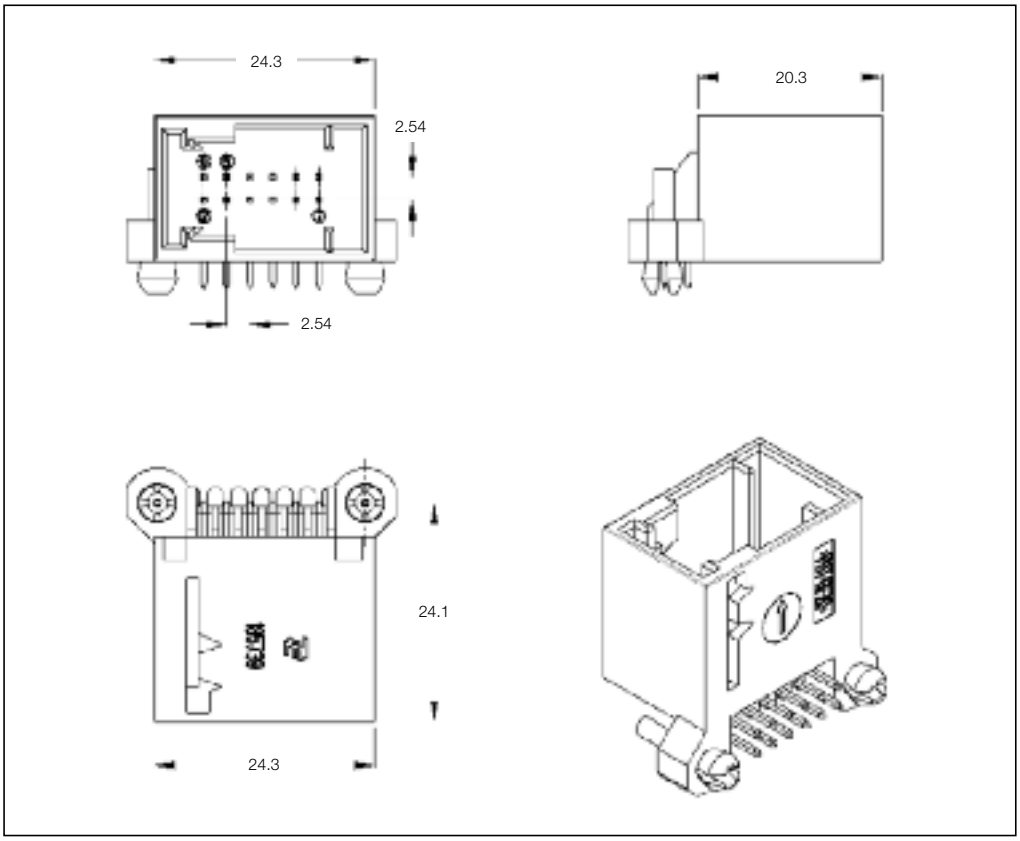

12 Position PCB Header with Board Locks

No. of Pos.	Keying Options	Housing Color	Part Numbers					
			PCB Header Right-Angle	PCB Header Vertical	Cover	Lever	Retainer Housing	Mating Receptacle Housing
12	–	Black	185740-1	–	–	–	–	185300-1 or 1379219-1
		Blue	185740-2	–				
		Brown	185740-3	–				
		Blue	1-185740-2	–				

Mating Receptacle Housing
See Page 4-3–4-4

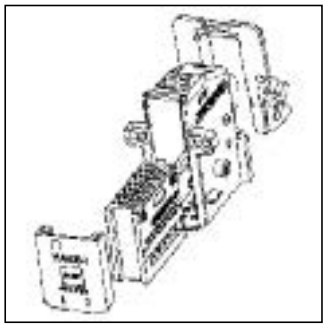

All specifications subject to change. Consult TE Connectivity for latest specifications.

Printed Circuit Board Headers

Technical Features

No. of Positions:
12 Positions

Housing Material:
PBT GF20

Material and Finish:
CuSn6, post tin plated

Product Specification:
108-15159

Application Specification:
—

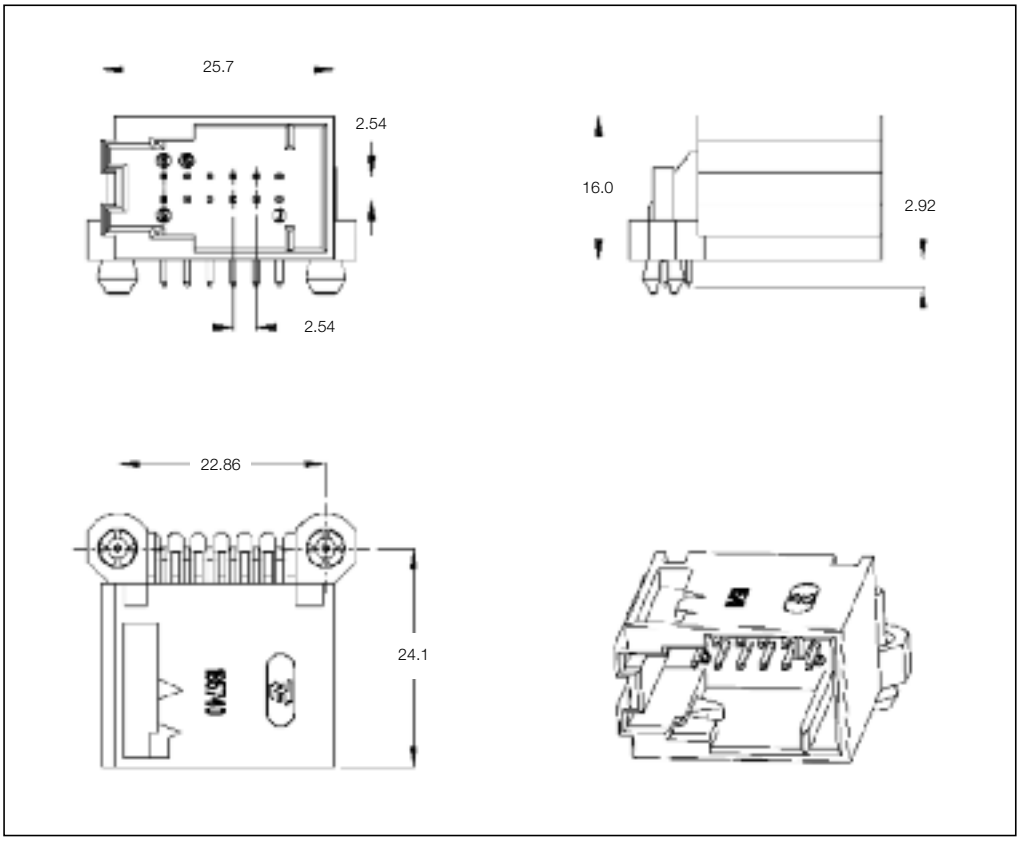

12 Position PCB Header

No. of Pos.	Keying Options	Housing Color	Part Numbers					
			PCB Header Right-Angle	PCB Header Vertical	Cover	Cover and Lever	Retainer Housing	Mating Counter Part
12	–	Blue	1379030-1	–	–	–	–	185300-1 or 1379219-1
		Brown	1379030-3	–				

Mating Receptacle Housing
See Page 4-3–4-4

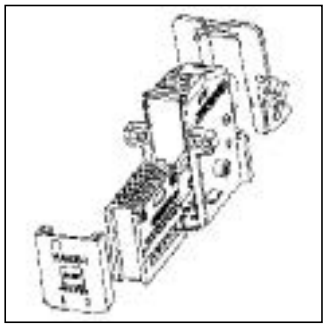

Pin Housings

Technical Features

No. of Positions:
12 Positions

Housing Material:
PBT GF20

Wire Size Range:
0.20–0.75 mm^2

Product Specification:
—

Application Specification:
—

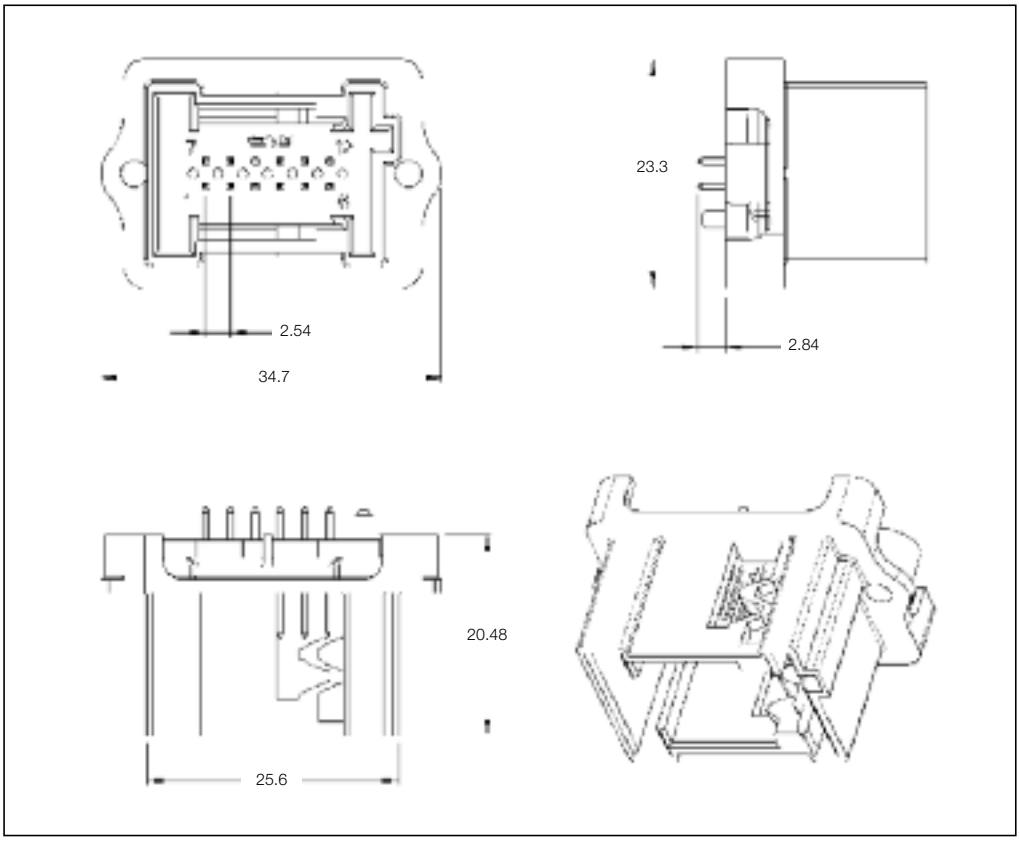

12 Position Pin Housing

No. of Pos.	Keying Options	Housing Color	Part Numbers				
			Pin Housing	Cover	Lever	Retainer Housing	Mating Receptacle Housing
12	–	Natural	967289-1	–	–	–	–

All specifications subject to change. Consult TE Connectivity for latest specifications.

Printed Circuit Board Headers

Technical Features

No. of Positions:
12 Positions with Board Locks

Housing Material:
PCT GF30

Material and Finish:
CuSn6, post tin

Product Specification:
108-15388

Application Specification:
—

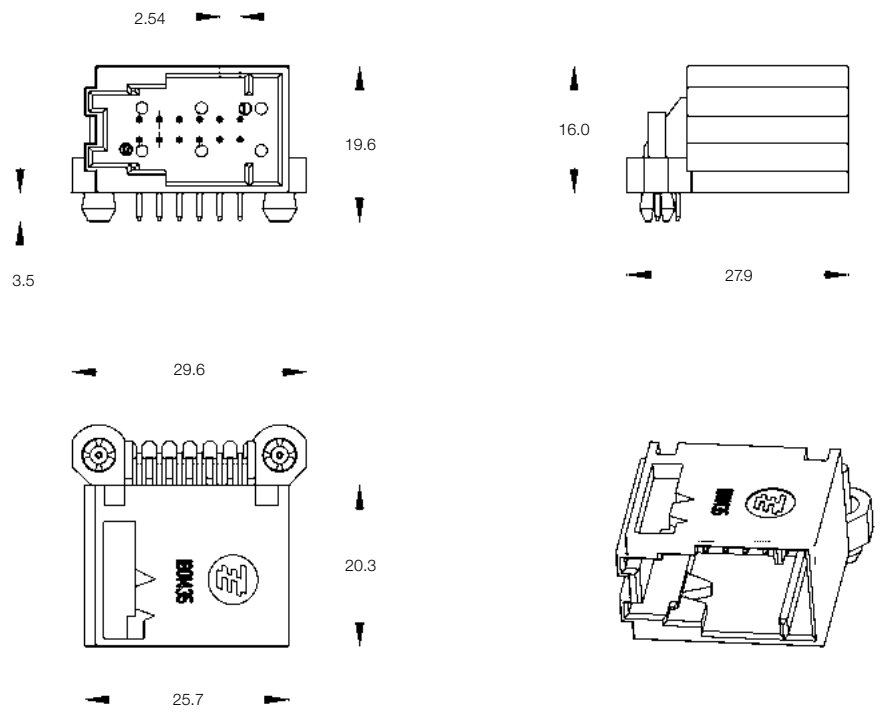

12 Position PCB Header with Board Locks

No. of Pos.	Keying Options	Housing Color	Part Numbers					
			PCB Header Right-Angle	PCB Header Vertical	Cover	Lever	Retainer Housing	Mating Receptacle Housing
12	–	Black	1801434-1	–	–	–	–	–
		Brown	1801434-2	–				

Printed Circuit Board Headers

Technical Features

No. of Positions:
12 Positions

Housing Material:
PBT GF15

Material and Finish:
CuFe2, tinned

Product Specification:
—

Application Specification:
—

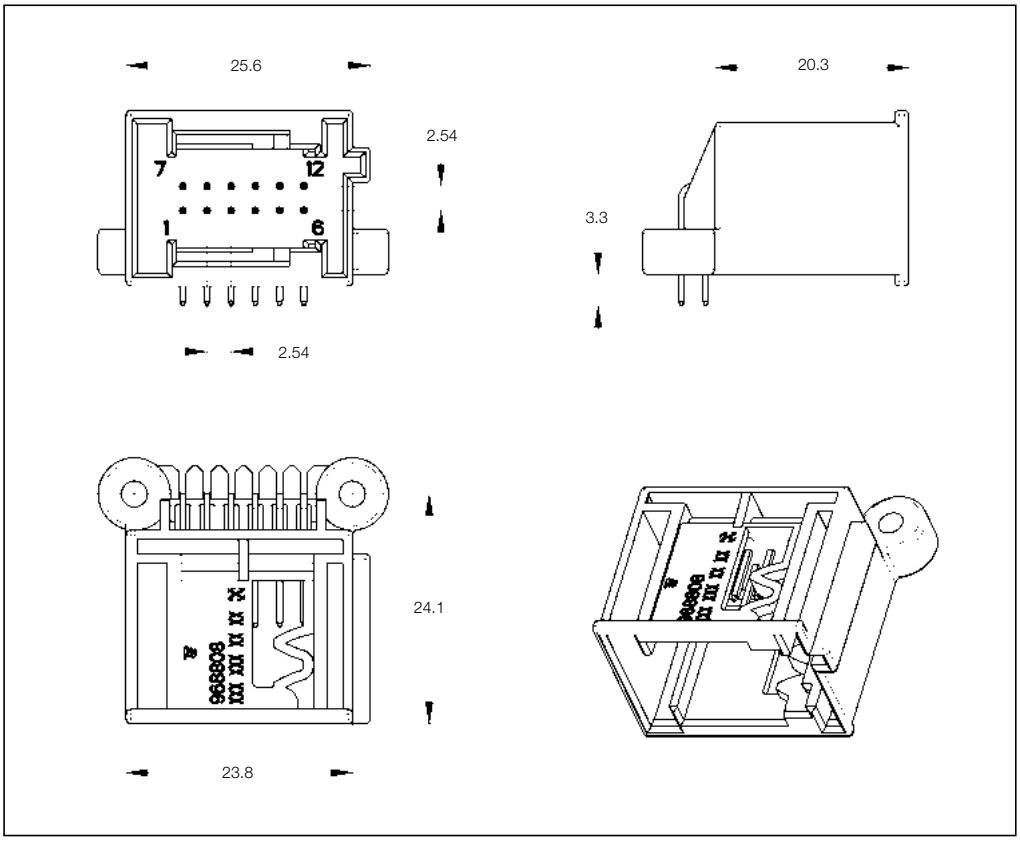

12 Position PCB Header with Board Locks

No. of Pos.	Keying Options	Housing Color	Part Numbers					
			PCB Header Right-Angle	PCB Header Vertical	Cover	Lever	Retainer Housing	Mating Receptacle Housing
12	A	Black	–	1-967582-1	–	–	–	–

All specifications subject to change. Consult TE Connectivity for latest specifications.

Printed Circuit Board Headers

Technical Features

No. of Positions:
12 Position MODU II Header

Housing Material:
PPA GF25

Material and Finish:
CuSn6, tinned

Product Specification:
108-18983

Application Specification:
—

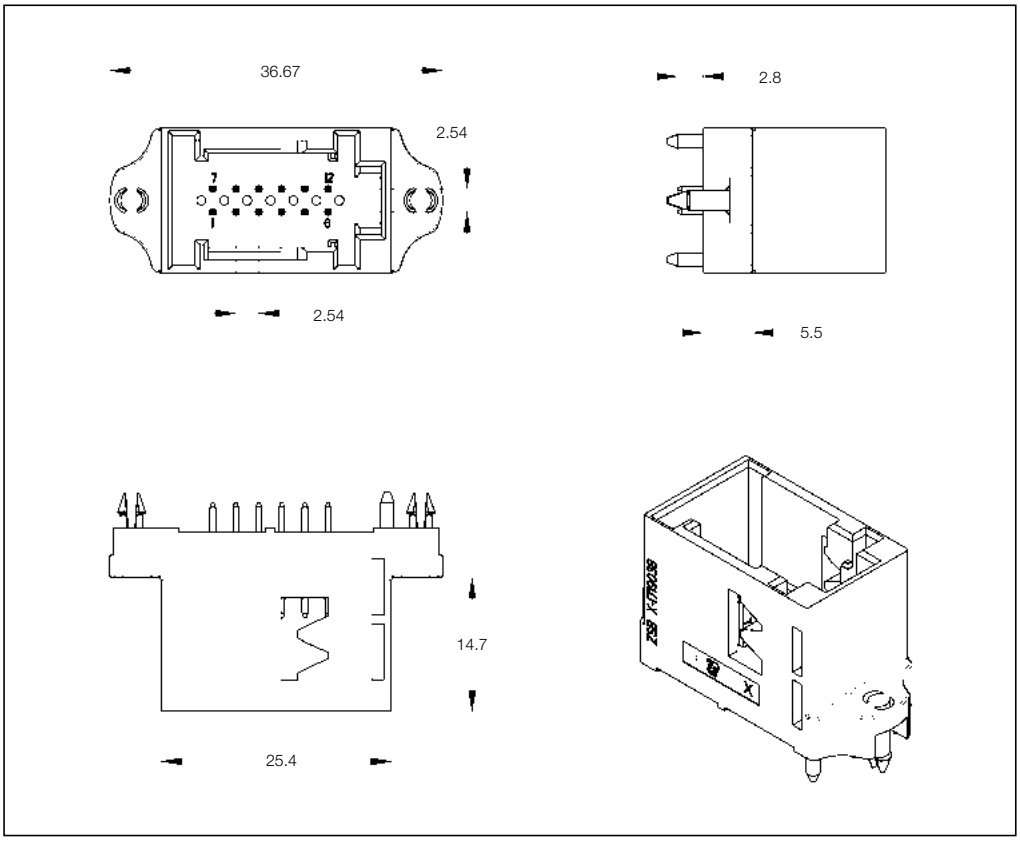

12 Position PCB Header MODU II

No. of Pos.	Keying Options	Housing Color	Part Numbers					
			PCB Header Right-Angle	PCB Header Vertical	Cover	Lever	Retainer Housing	Mating Receptacle Housing
12	A	Black	–	1-1719039-7	–	–	–	–

Printed Circuit Board Headers

Technical Features

No. of Positions:
12 Position MODU II

Housing Material:
PA66 GF30

Material and Finish:
See customer drawing

Product Specification:
108-20206

Application Specification:
—

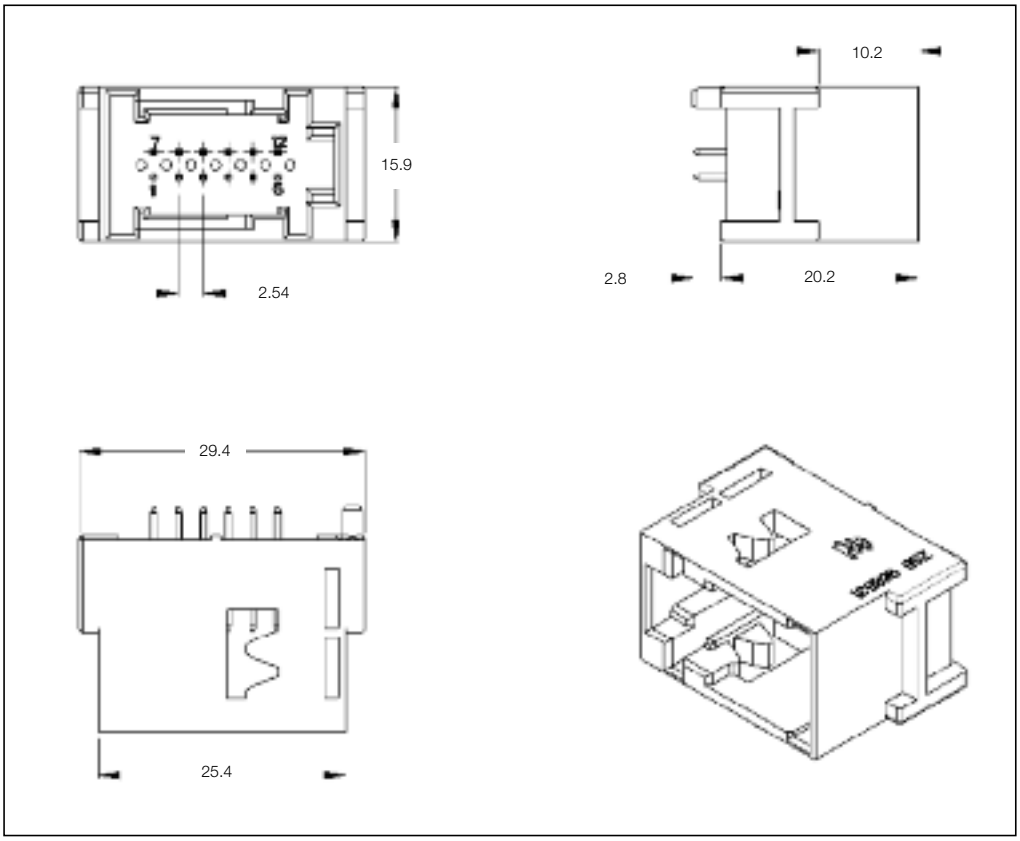

12 Position PCB Header MODU II

No. of Pos.	Keying Options	Housing Color	Part Numbers					
			PCB Header Right-Angle	PCB Header Vertical	Cover	Lever	Retainer Housing	Mating Receptacle Housing
12	A	Black	–	967646-1	–	–	–	–
	B	Green	–	967646-2				
	C	Blue	–	967646-3				
	C	Blue	–	967646-6				
	C	Gray	–	967646-9				
	A	Black	–	1-967646-1				

All specifications subject to change. Consult TE Connectivity for latest specifications.

Printed Circuit Board Headers

Technical Features

No. of Positions:
12 Positions

Housing Material:
PBT GF20

Material and Finish:
CuSn6, post tin

Product Specification:
—

Application Specification:
—

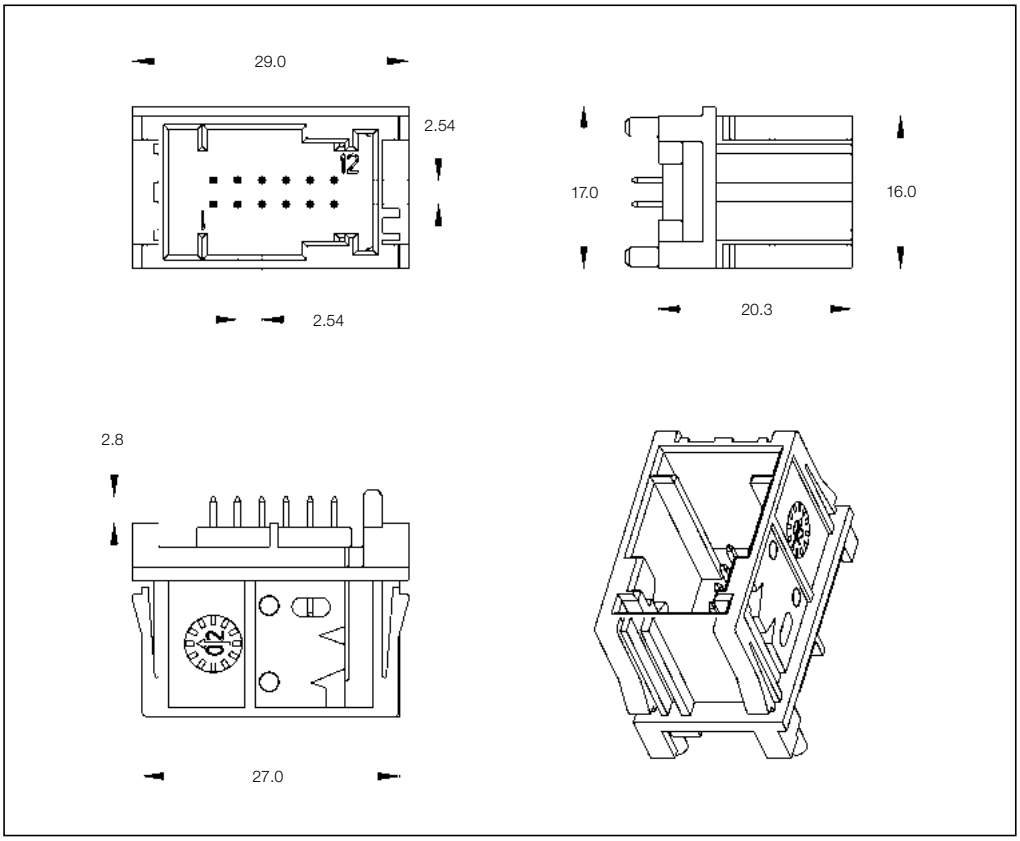

12 Position PCB Header

No. of Pos.	Keying Options	Housing Color	Part Numbers					
			PCB Header Right-Angle	PCB Header Vertical	Cover	Lever	Retainer Housing	Mating Receptacle Housing
12	–	Blue	–	1379640-2	–	–	–	–
		Brown	–	1379640-3				

Printed Circuit Board Headers

Technical Features

No. of Positions:
12 Positions

Housing Material:
PBT GF20

Material and Finish:
CuSn6, post tin

Product Specification:
—

Application Specification:
—

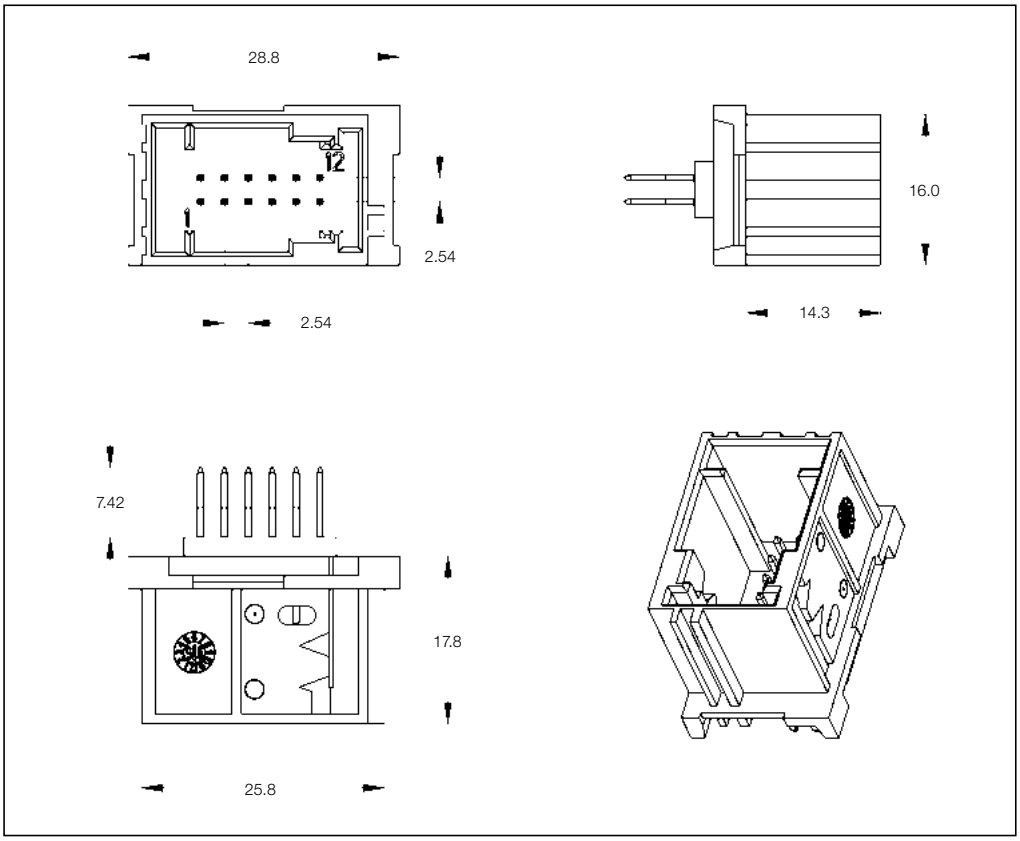

12 Position PCB Header

No. of Pos.	Keying Options	Housing Color	Part Numbers					
			PCB Header Right-Angle	PCB Header Vertical	Cover	Lever	Retainer Housing	Mating Receptacle Housing
12	–	Black	–	185526-1	–	–	–	–
		Blue	–	185526-2				
		Brown	–	185526-3				

All specifications subject to change. Consult TE Connectivity for latest specifications.

Receptacle Housings

Technical Features

No. of Positions:
14 Position Assembly

Housing Material:
PBT GF15

Wire Size Range:
0.20–0.75 mm^2

Product Specification:
108-61052

Application Specification:
114-18021

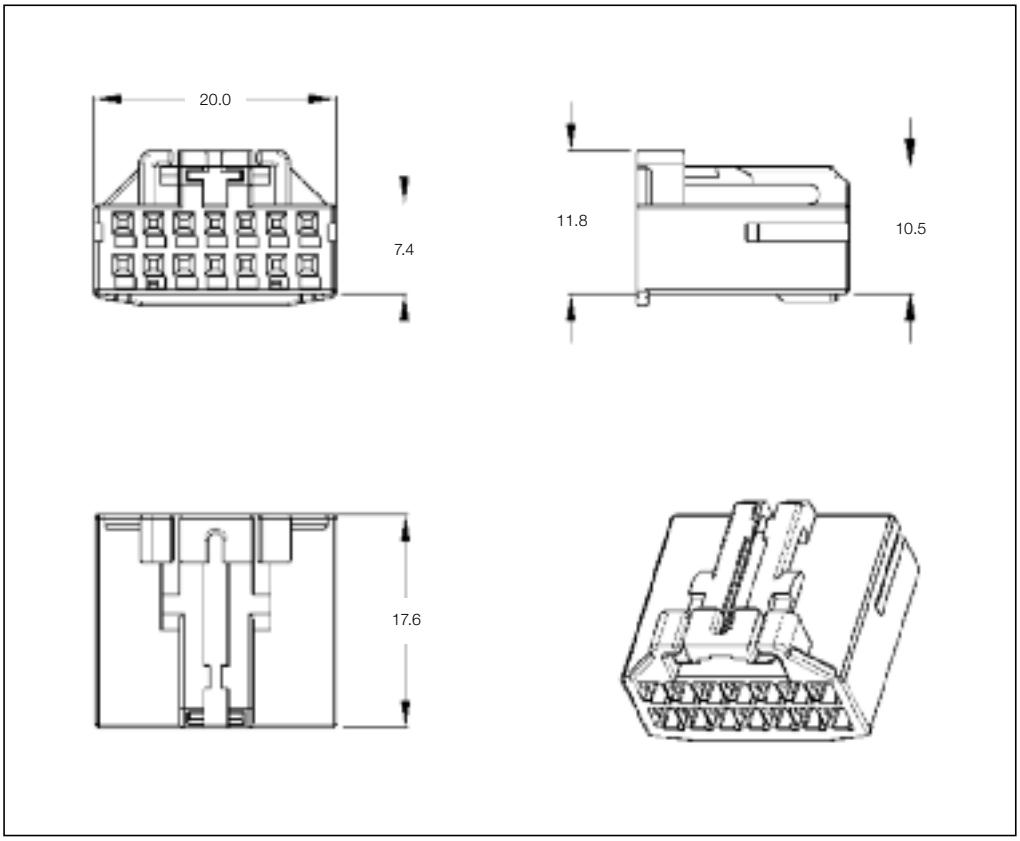

14 Position Receptacle Housings

No. of Pos.	Keying Options	Housing Color	Part Numbers							
			Receptacle Housing	Cover	Locking Device	Cover and Lever	Retainer Housing	Mating Pin Housing	Mating PCB Header Right-Angle	Mating PCB Header Vertical
14	–	Black	936124-1	–	–	–	–	936126-1	–	–
		Yellow	936124-2					936126-2		
		Yellow	1-936124-2					–		

Mating Pin Housing
See Page 4-22

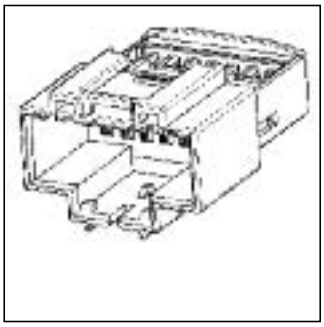

Pin Housings

Technical Features

No. of Positions:
14 Positions

Housing Material:
PBT GF15

Wire Size Range:
0.25–0.75 mm^2

Product Specification:
108-18030

Application Specification:
114-18021

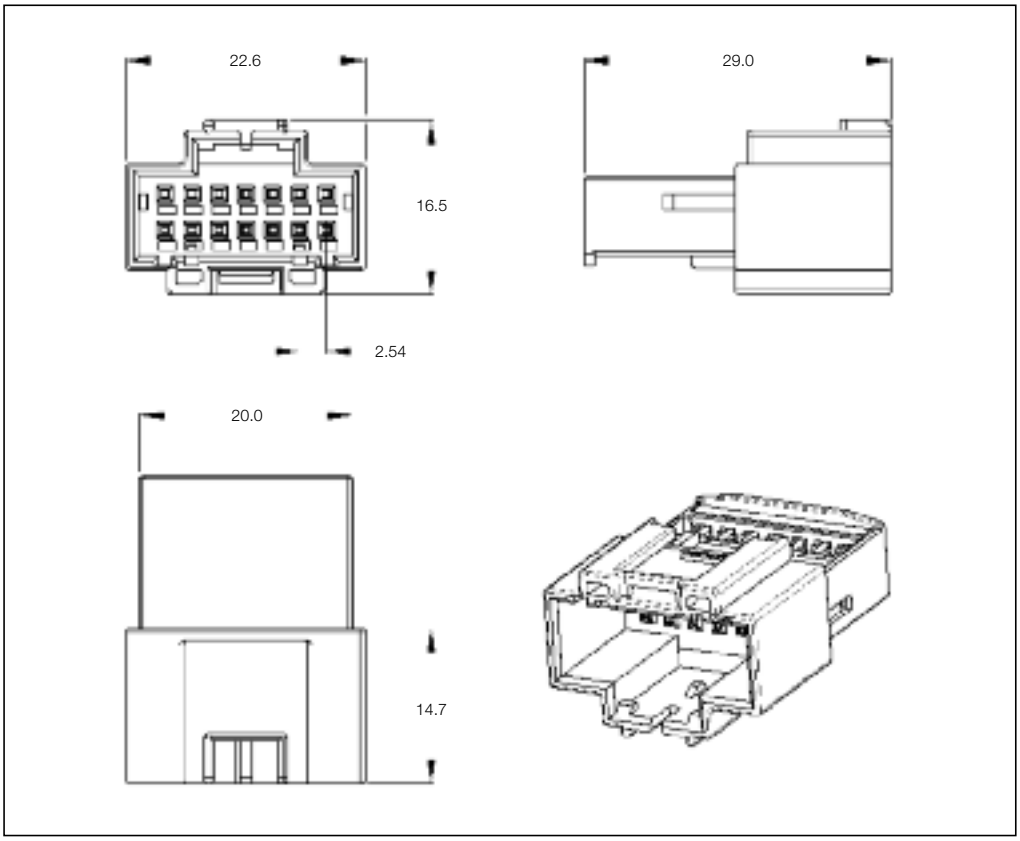

14 Position Pin Housings

No. of Pos.	Keying Options	Housing Color	Part Numbers					
			Pin Housing	Cover	Locking Device	Cover and Lever	Retainer Housing	Mating Receptacle Housing
14	–	Black	936126-1	–	–	–	–	936124-1
		Yellow	936126-2		–	–	–	936124-2

Mating Receptacle Housing
See Page 4-21

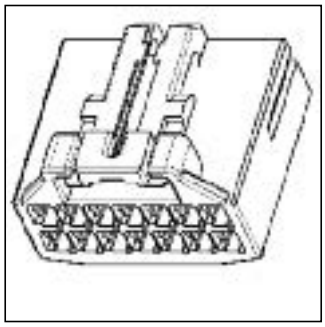

All specifications subject to change. Consult TE Connectivity for latest specifications.

Receptacle Housings

Technical Features

No. of Positions:
16 Position or
8 Position + 4 Shorting Bars

Housing Material:
PBT GF10

Wire Size Range:
0.35–0.75 mm^2

Product Specification:
108-15308

Application Specification:
411-15629

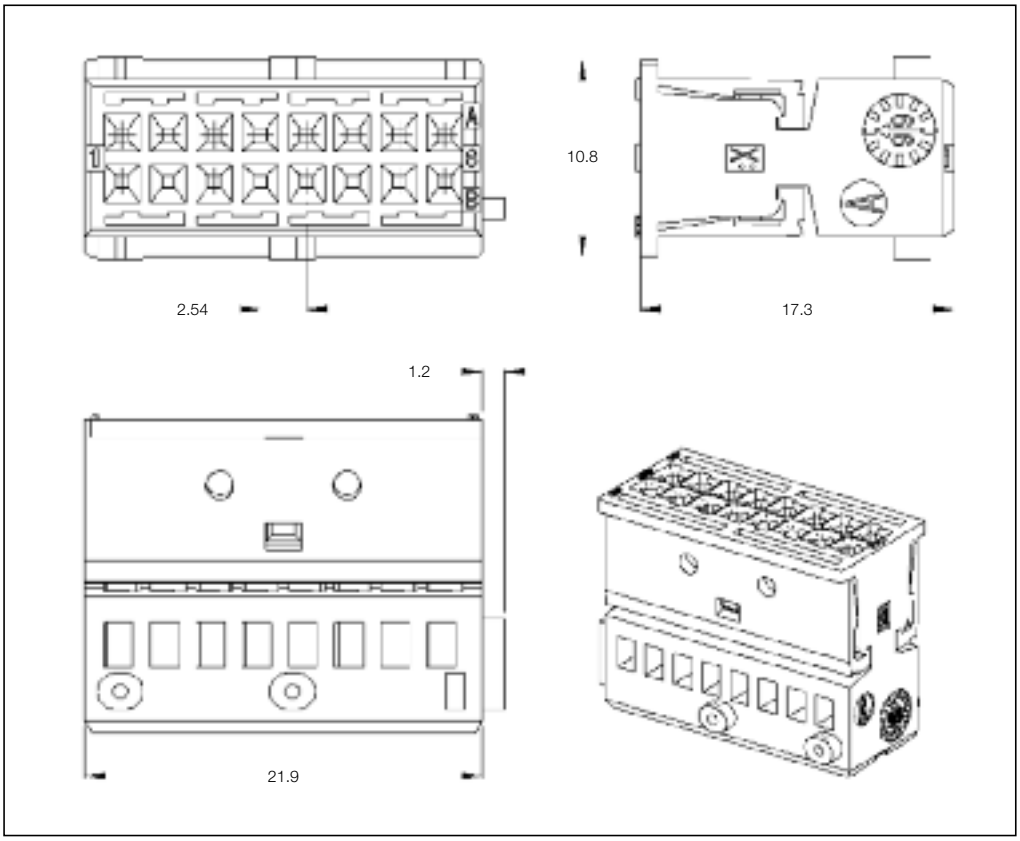

16 Position Receptacle Housings

No. of Pos.	Keying Options	Housing Color	Part Numbers							
			Receptacle Housing	Cover	Locking Device	Cover and Lever	Retainer Housing	Mating Pin Housing	Mating PCB Header Right-Angle	Mating PCB Header Vertical
16	–	Green	953892-1	–	–	–	–	953893-1	–	–
		Gray	1-953892-1					1-953893-1		
		Black	2-953892-1					2-953893-1		
		Brown	3-953892-1					3-953893-1		
		Blue	4-953892-1					4-953893-1		

Mating Pin Housing
See Page 4-25

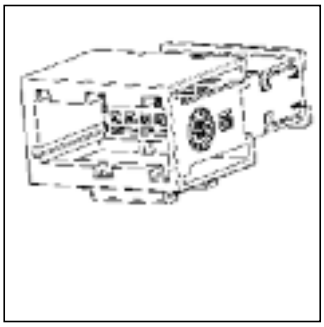

Receptacle Housings

Technical Features

No. of Positions:
16 Positions (2 × 8)

Housing Material:
PBT GF15

Wire Size Range:
0.14–0.75 mm²

Product Specification:
108-18924

Application Specification:
114-18630

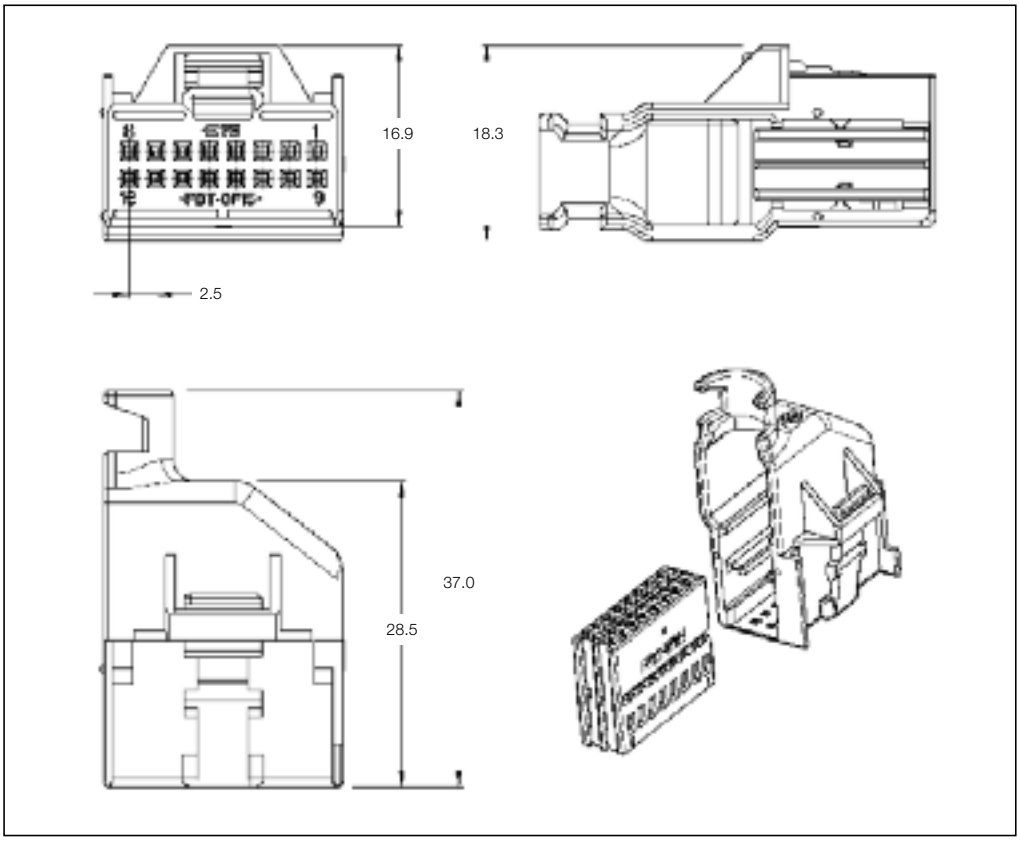

16 Position Receptacle Housings

No. of Pos.	Keying Options	Housing Color	Part Numbers							
			Receptacle Housing	Cover	Locking Device	Cover and Lever	Retainer Housing	Mating Pin Housing	Mating PCB Header Right-Angle	Mating PCB Header Vertical
16	B	Black	1534101-1	1-1534097-2 (Cod B black) 1-1534097-1 (Cod A brown)	–	–	–	–	966870-1	–

Mating Header
See Page 4-26

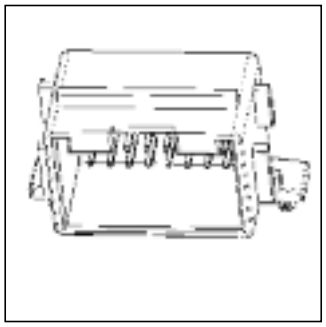

All specifications subject to change. Consult TE Connectivity for latest specifications.

Pin Housings

Technical Features

No. of Positions:
16 Positions

Housing Material:
PBT GF20

Wire Size Range:
0.20–0.75 mm^2

Product Specification:
108-15308

Application Specification:
411-15629

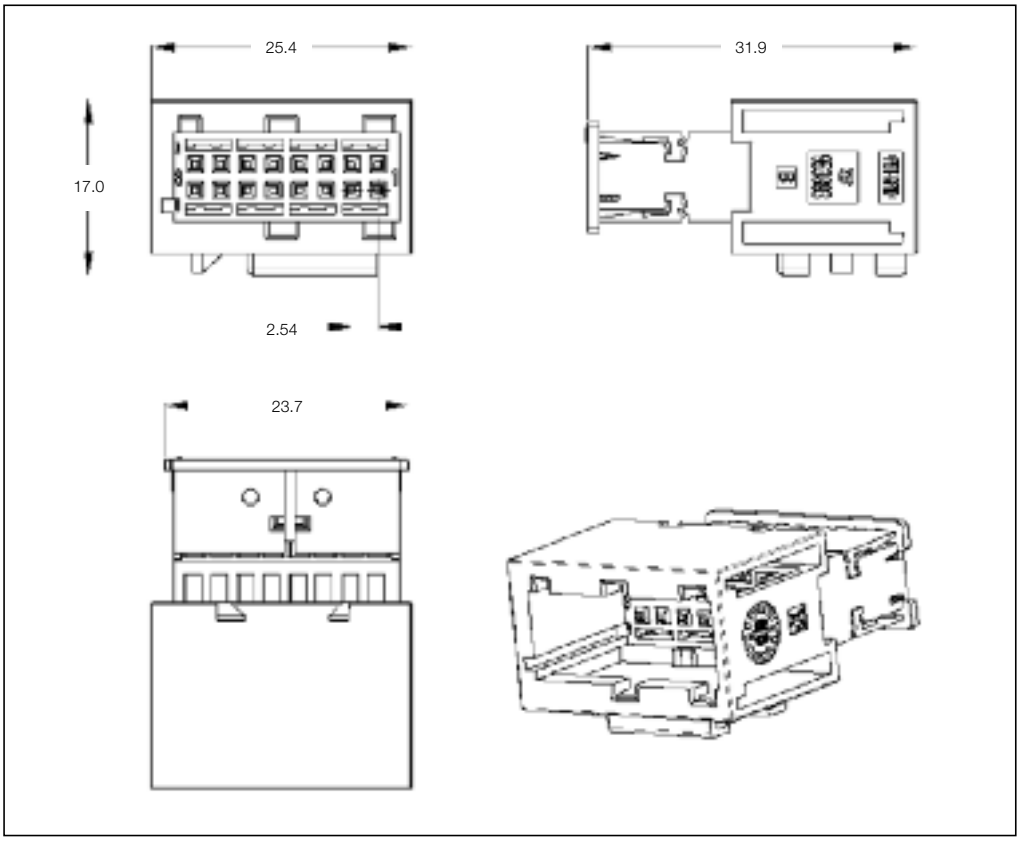

16 Position Pin Housings

No. of Pos.	Keying Options	Housing Color	Part Numbers					
			Pin Housing	Cover	Locking Device	Cover and Lever	Retainer Housing	Mating Counter Part
16	–	Green	953893-1	–	–	–	–	953892-1
		Gray	1-953893-1					1-953892-1
		Black	2-953893-1					2-953892-1
		Brown	3-953893-1					3-953892-1
		Blue	4-953893-1					4-953892-1

Mating Receptacle Housing
See Page 4-23

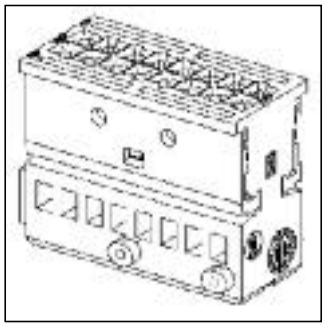

Printed Circuit Board Headers

Technical Features

No. of Positions:
16 Position Assembly (2 × 8)

Housing Material:
PBT GF15

Material and Finish:
CuSn, tin plated

Product Specification:
108-18692-0

Application Specification:
—

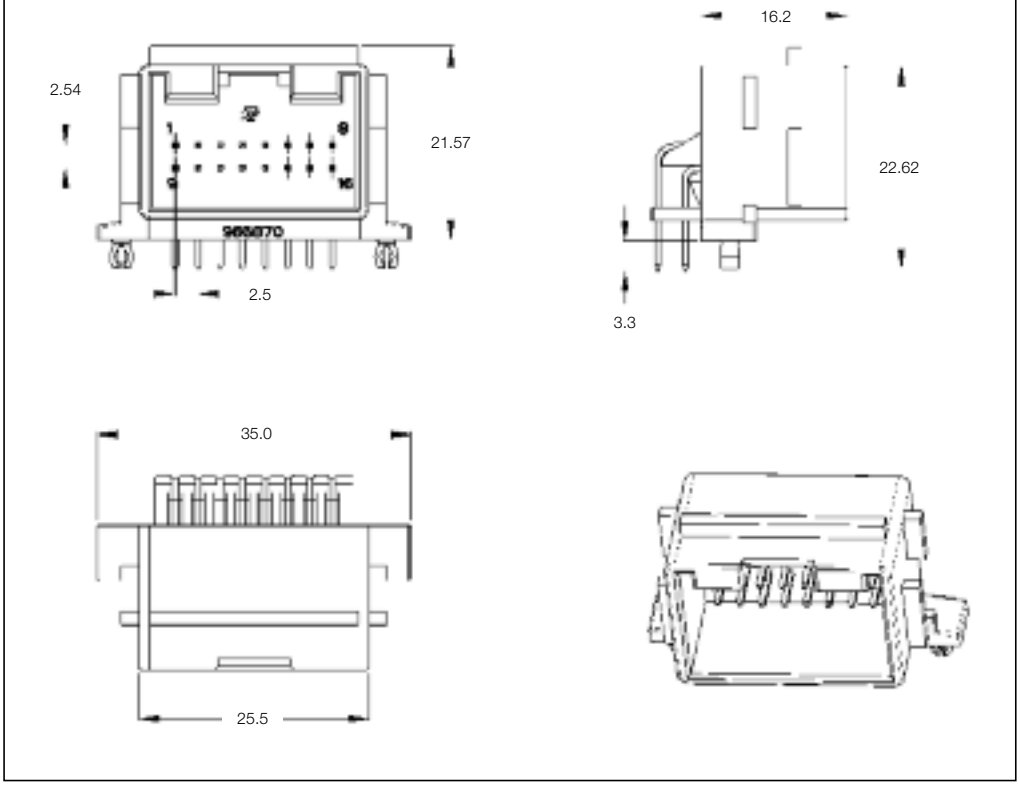

16 Position PCB Header

No. of Pos.	Keying Options	Housing Color	Part Numbers					
			PCB Header Right-Angle	PCB Header Vertical	Cover	Cover and Lever	Retainer Housing	Mating Receptacle Housing
16	–	Black	966870-1	–	–	–	–	1534101-1

Mating Receptacle Housing
See Page 4-24

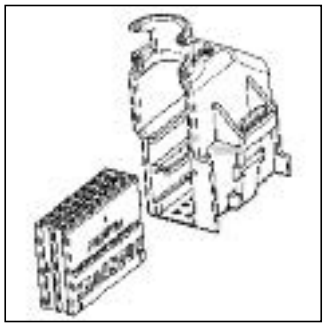

All specifications subject to change. Consult TE Connectivity for latest specifications.

Printed Circuit Board Headers

Technical Features

Application:
Body Computer

No. of Positions:
16 Positions

Housing Material:
PA66 GF30

Material and Finish:
CuSn4, tin plated

Product Specification:
108-20206

Application Specification:
—

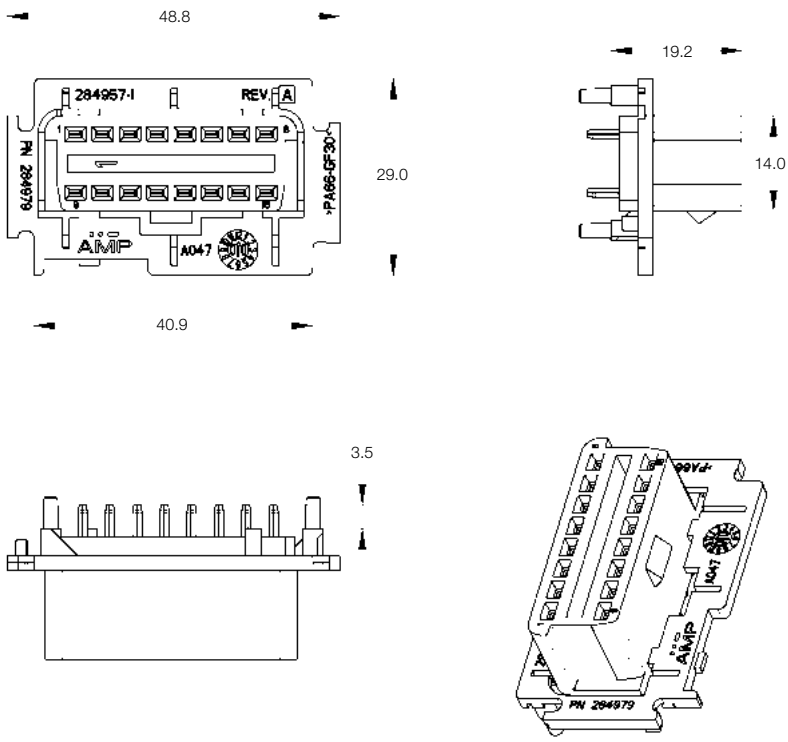

16 Position PCB Header

No. of Pos.	Keying Options	Housing Color	Part Numbers					
			PCB Header Right-Angle	PCB Header Vertical	Cover	Lever	Retainer Housing	Mating Receptacle Housing
16	–	Black	–	284979-1	–	–	–	–

Printed Circuit Board Headers

Technical Features

No. of Positions:
16 Positions

Housing Material:
PA66 GF30

Material and Finish:
Copper Alloy, tinned

Product Specification:
108-20206

Application Specification:
—

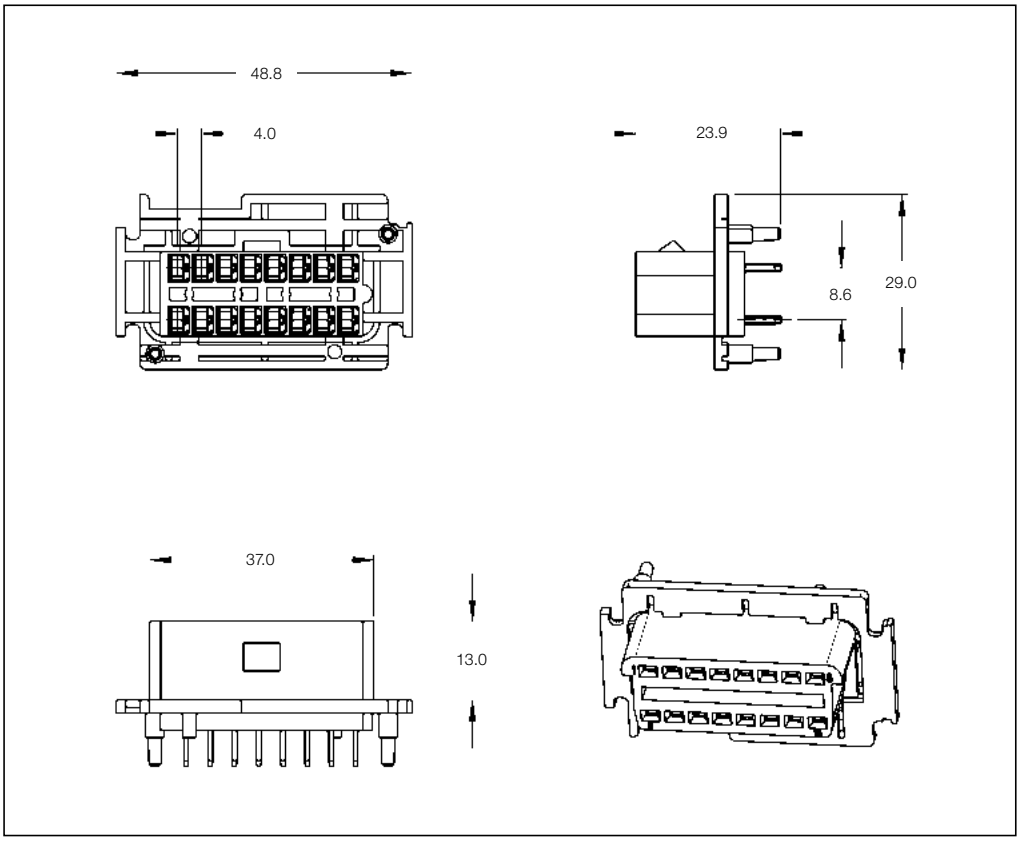

16 Position PCB Header

No. of Pos.	Keying Options	Housing Color	Part Numbers					
			PCB Header Right-Angle	PCB Header Vertical	Cover	Lever	Retainer Housing	Mating Receptacle Housing
16	–	Black	–	1599644-1	–	–	–	–

All specifications subject to change. Consult TE Connectivity for latest specifications.

Receptacle Housings

Technical Features

No. of Positions:
18 Positions

Housing Material:
PBT GF20

Wire Size Range:
0.35–0.75 mm^2

Product Specification:
108-15134

Application Specification:
411-15554

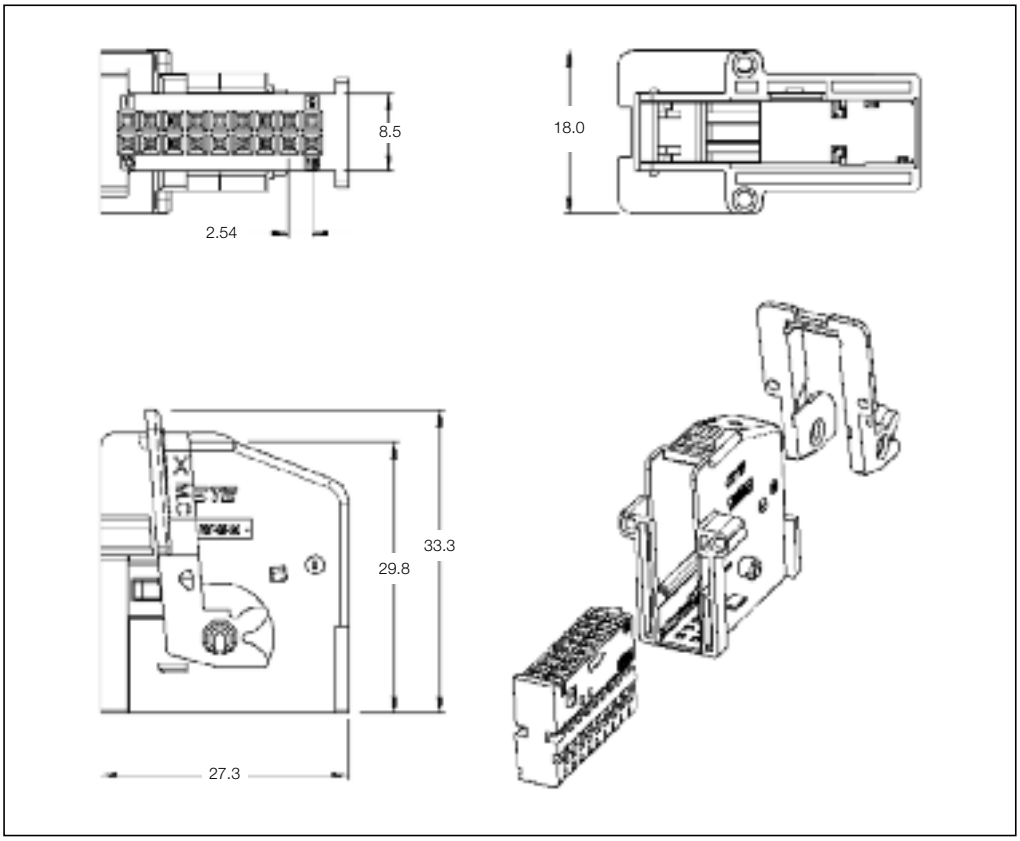

18 Position Receptacle Housings

No. of Pos.	Keying Options	Housing Color	Part Numbers: Receptacle Housing	Cover	Locking Device	Cover and Lever	Retainer Housing	Mating Pin Housing	Mating PCB Header Right-Angle	Vertical
18	–	Black	1379102-1	–	–	–	–	–	185683-1 185680-1 1379731-1	185458-1 953302-1 953264-1
			–	–	–	1379100-1 (0°) black				
			–	–	–	1379100-2 (0°) white				
			–	–	–	1379101-1 (90°) black			For application see customer drawing	
			–	–	–	1379101-2 (90°) white				

Mating Headers
See Page 4-24–4-26

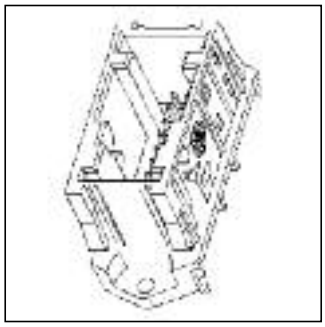

Receptacle Housings

Technical Features

No. of Positions:
18 Positions

Housing Material:
PBT GF15

Wire Size Range:
0.75 mm^2 Max.

Product Specification:
108-18157-1

Application Specification:
114-18021

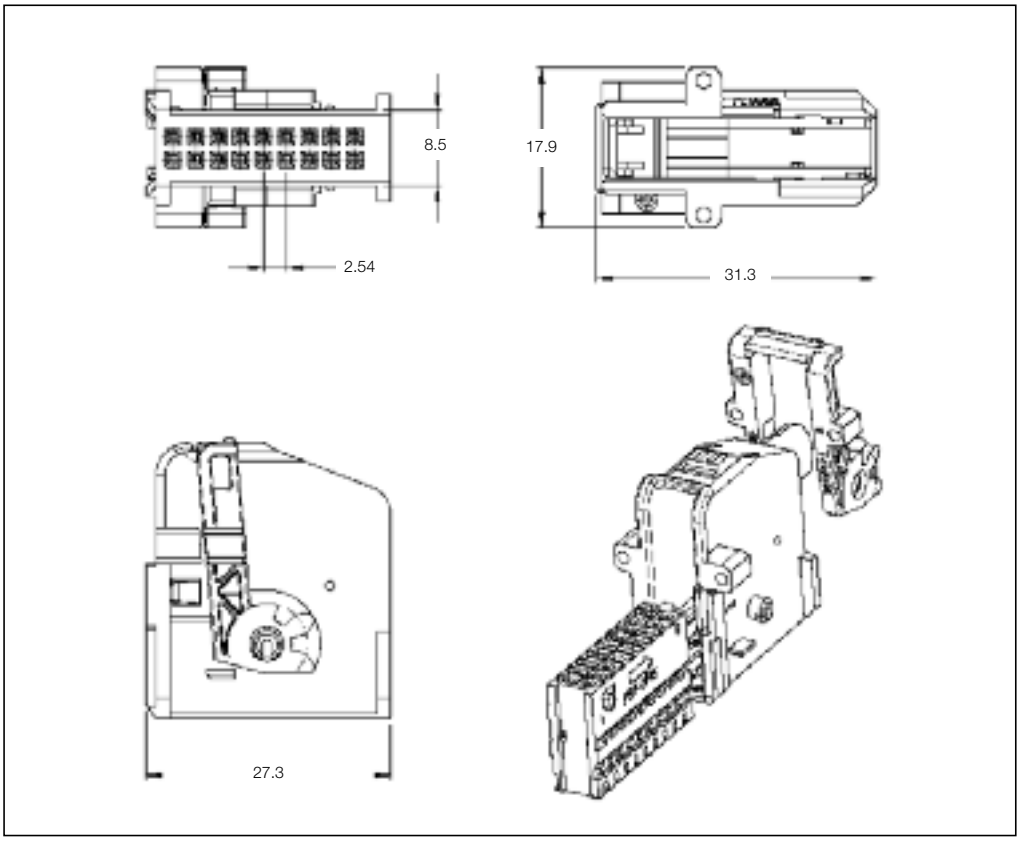

18 Position Receptacle Housings

No. of Pos.	Keying Options	Housing Color	Part Numbers							
			Receptacle Housing	Cover	Locking Device	Cover and Lever	Retainer Housing	Mating Pin Housing	Mating PCB Header Right-Angle	Mating PCB Header Vertical
18	–	Black	1355348-1	–	–	1-1355350-1 (Cod B; black)	–	1-962692-2	1-963539-1	1-1355154-1
						2-1355350-1 (Cod B; nature)	–	2-962692-2	–	2-1355154-1 3-1355154-1

Mating Pin Housing
See Page 4-33

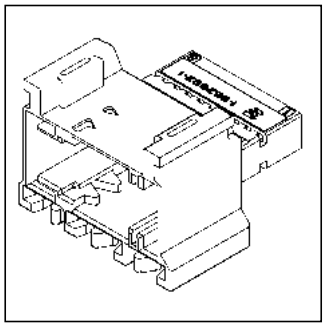

Mating Headers
See Pages 4-37–4-38

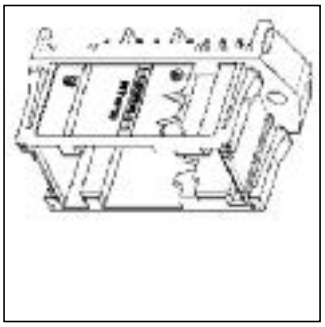

All specifications subject to change. Consult TE Connectivity for latest specifications.

Receptacle Housings

Technical Features

No. of Positions:
18 Positions (2 x 9 Pos.)

Housing Material:
PA66 GF13

Wire Size Range:
0.20–0.75 mm^2

Product Specification:
—

Application Specification:
—

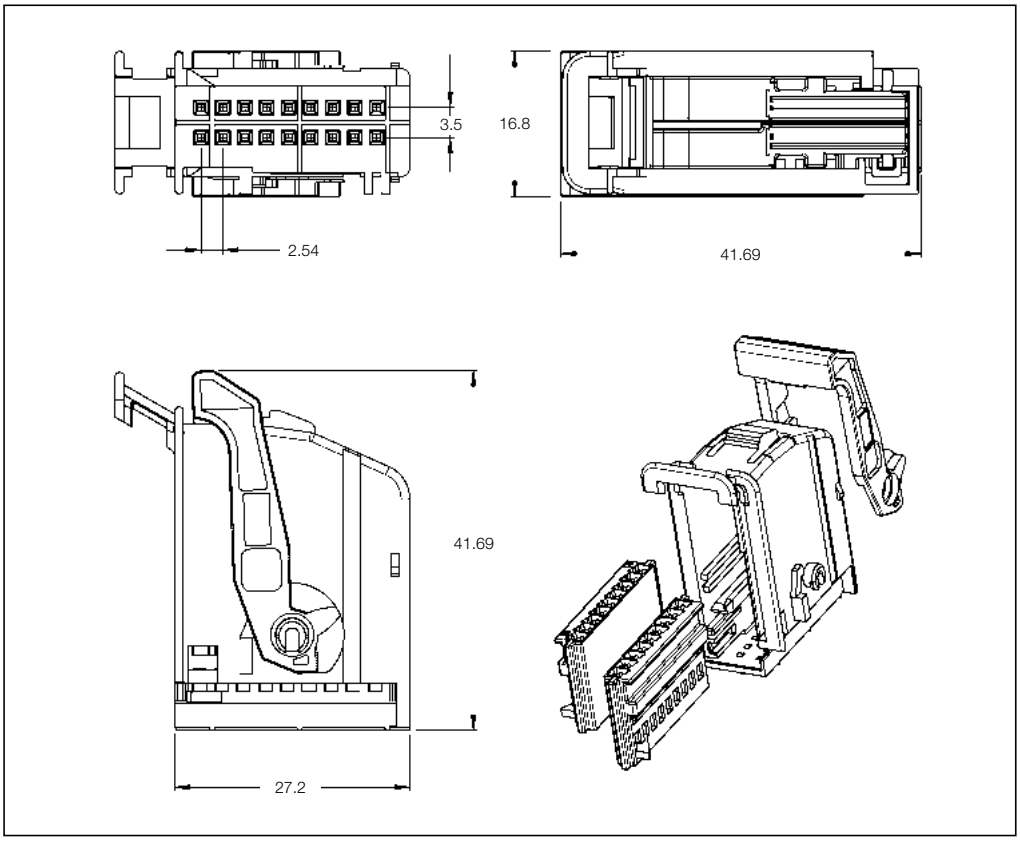

18 Position Receptacle Housings

No. of Pos.	Keying Options	Housing Color	Part Numbers						
			Receptacle Housing	Cover	Lever	Retainer Housing	Mating Pin Housing	Mating PCB Header Right-Angle	Mating PCB Header Vertical
18	–	See customer drawing	284134-X	284136-1 (black) 284136-2 (gray)	–	–	–	–	953466-1 953466-2

Mating Headers
See Pages 4-39–4-40

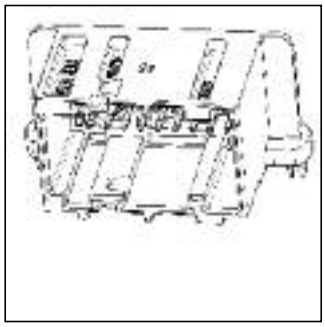

Receptacle Housings

Technical Features

No. of Positions:
18 Position + 6 Shorting Bars

Housing Material:
PBT GF20

Wire Size Range:
0.2–0.6 mm^2

Product Specification:
108-15111

Application Specification:
411-15533

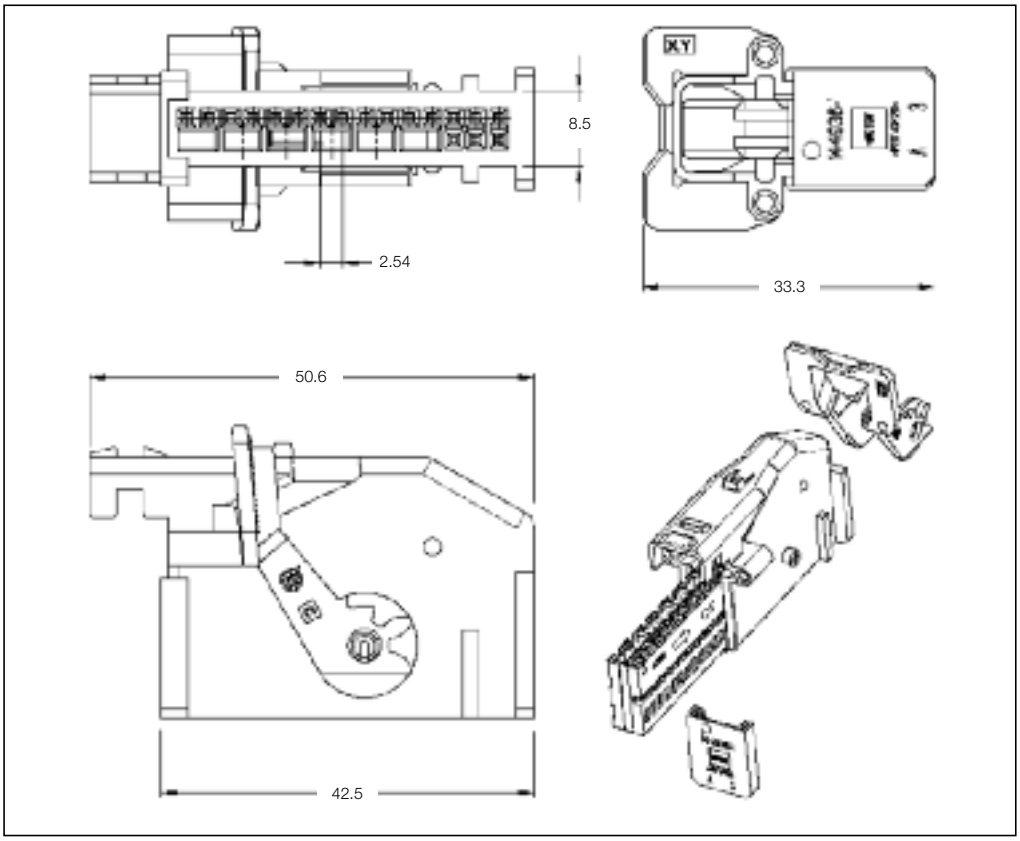

18 Position Receptacle Housings

No. of Pos.	Keying Options	Housing Color	Part Numbers							
			Receptacle Housing	Cover	Locking Device	Cover and Lever	Retainer Housing	Mating Pin Housing	Mating PCB Header Right-Angle	Mating PCB Header Vertical
18	–	Black	144952-1	–	144936-1	–	–	–	144950-1 185180-1 For application see customer drawing	–
		Orange	–	–	–	144951-1				
		Yellow	–	–	–	144951-2				
		Red	–	–	–	144951-3				
		Green	–	–	–	144951-4				

All specifications subject to change. Consult TE Connectivity for latest specifications.

Pin Housings

Technical Features

No. of Positions:
18 Positions

Housing Material:
PBT GF20

Wire Size Range:
0.75 mm^2 Max.

Product Specification:
108-18517

Application Specification:
—

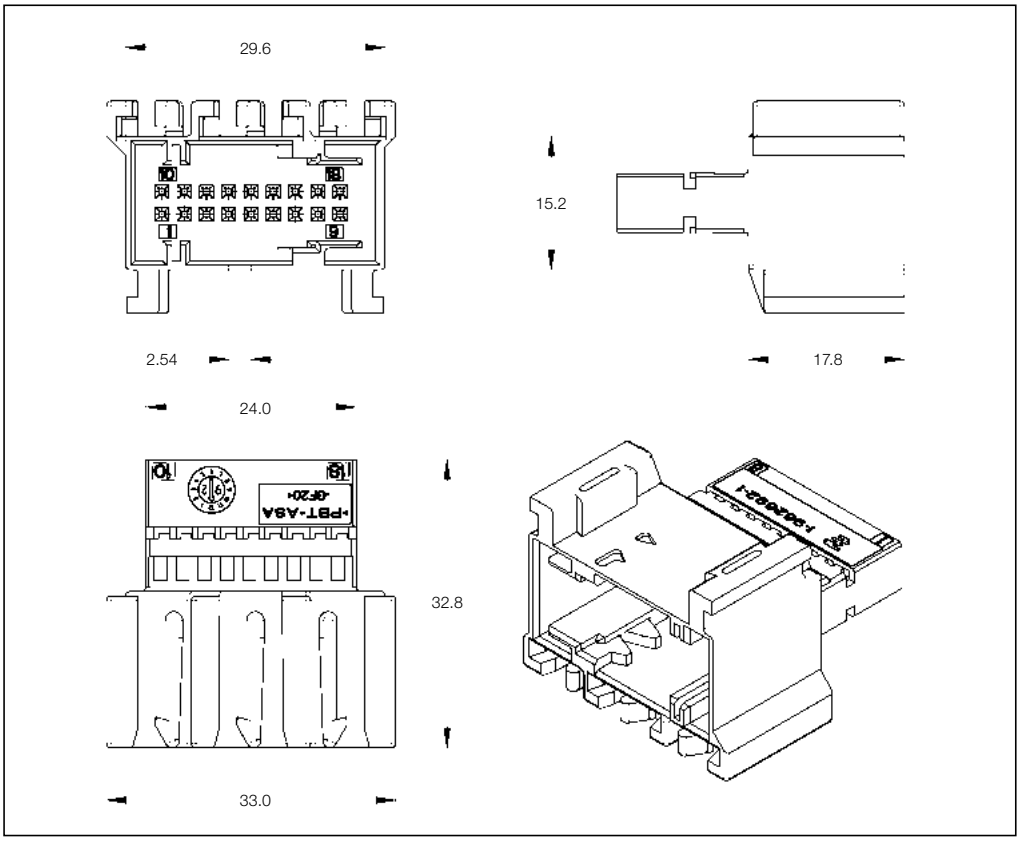

18 Position Pin Housings

No. of Pos.	Keying Options	Housing Color	Part Numbers					
			Pin Housing	Cover	Locking Device	Cover and Lever	Retainer Housing	Mating Receptacle Housing
18	A	Black	1-962692-2	–	–	–	–	1355348-1
	B	Natural	2-962692-2					

Mating Receptacle Housing
See Page 4-30

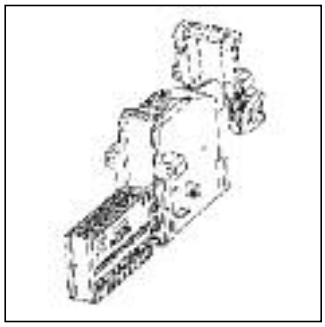

Printed Circuit Board Headers

Technical Features

No. of Positions:
18 Positions with Ears

Housing Material:
PBT GF20

Material and Finish:
CuSn6, post tin plated

Product Specification:
108-15146

Application Specification:
—

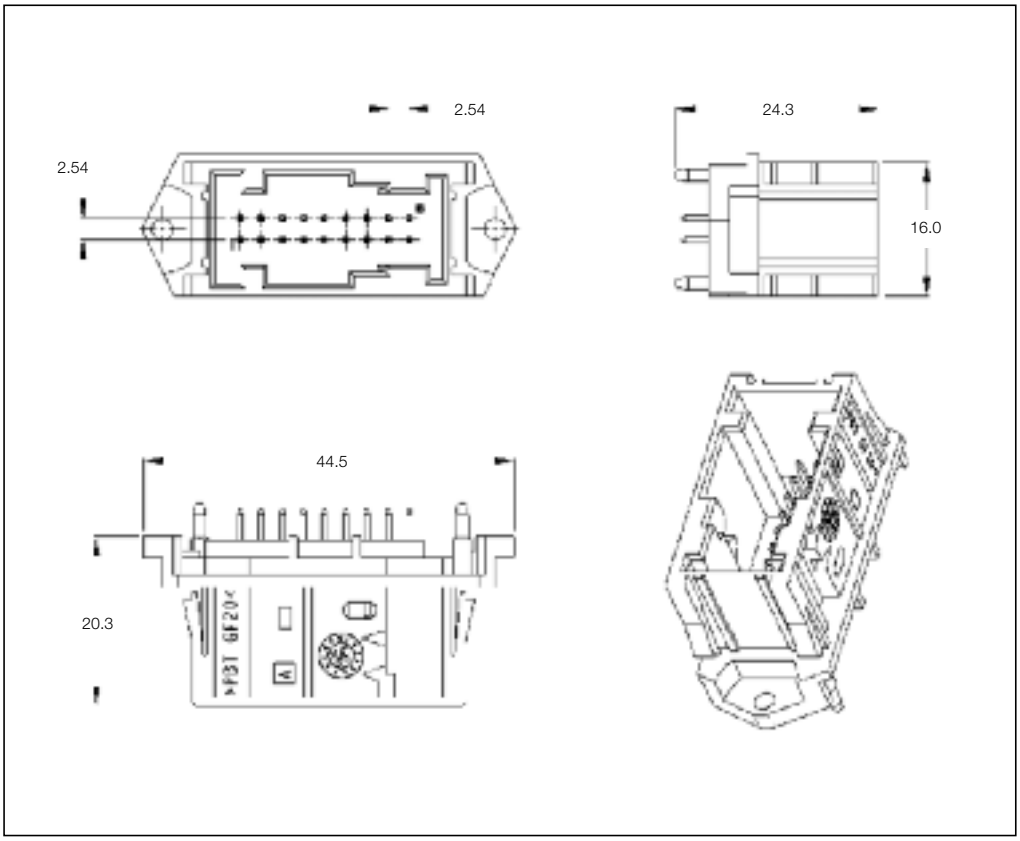

18 Position PCB Header

No. of Pos.	Keying Options	Housing Color	Part Numbers					
			PCB Header Right-Angle	PCB Header Vertical	Cover	Cover and Lever	Retainer Housing	Mating Counter Part
18	–	Black	–	953302-1	–	–	–	1379102-1
		White	–	953302-2				
		Blue	–	953302-3				

Mating Receptacle Housing
See Page 4-29

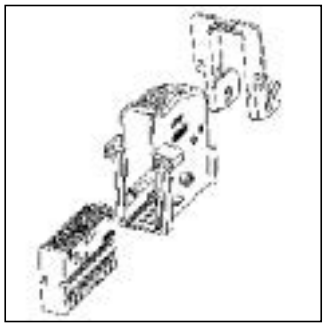

All specifications subject to change. Consult TE Connectivity for latest specifications.

Printed Circuit Board Headers

Technical Features

No. of Positions:
18 Positions

Housing Material:
PCT GF30

Material and Finish:
CuSn6, post tin plated

Product Specification:
108-15151

Product Drawing:
185680

Application Specification:
—

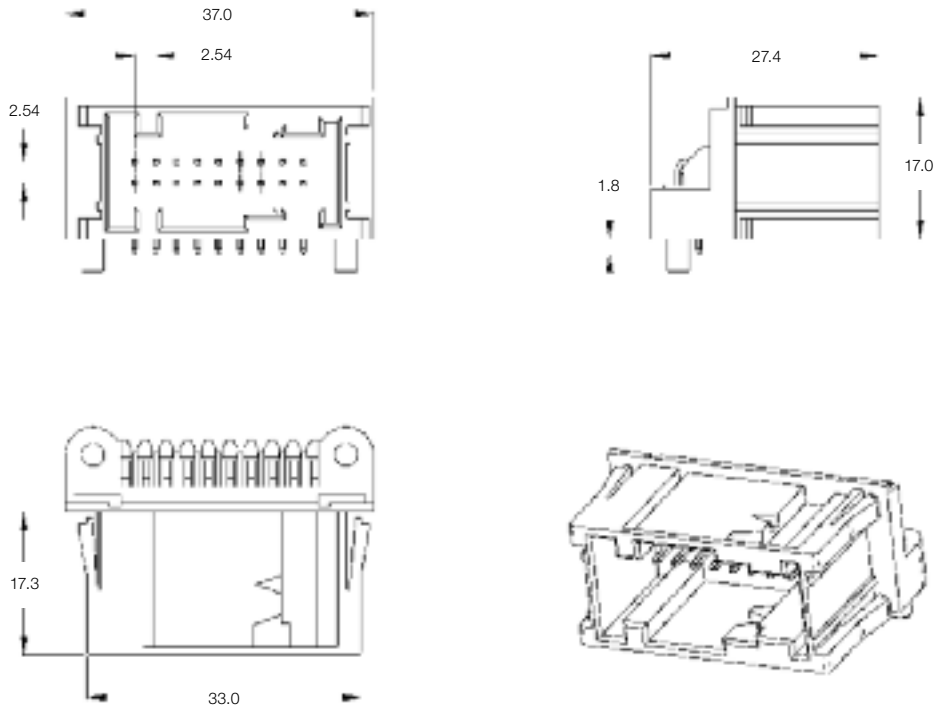

18 Position PCB Header

No. of Pos.	Keying Options	Housing Color	Part Numbers					
			PCB Header Right-Angle	PCB Header Vertical	Cover	Cover and Lever	Retainer Housing	Mating Counter Part
18	–	Black (Trays)	1379731-1	–	–	–	–	1379102-1
		White (Trays)	1379731-2	–				
		Blue (Trays)	1379731-3	–				
		Black (Sticks)	6-1379731-1	–				
		White (Sticks)	6-1379731-2	–				

Mating Receptacle Housing
See Page 4-29

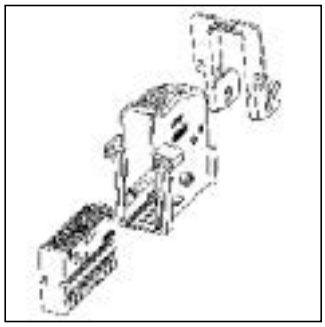

Printed Circuit Board Headers

Technical Features

No. of Positions:
18 Positions with Ears

Housing Material:
PBT GF20

Material and Finish:
CuSn6, post tin plated

Product Specification:
108-15151

Application Specification:
—

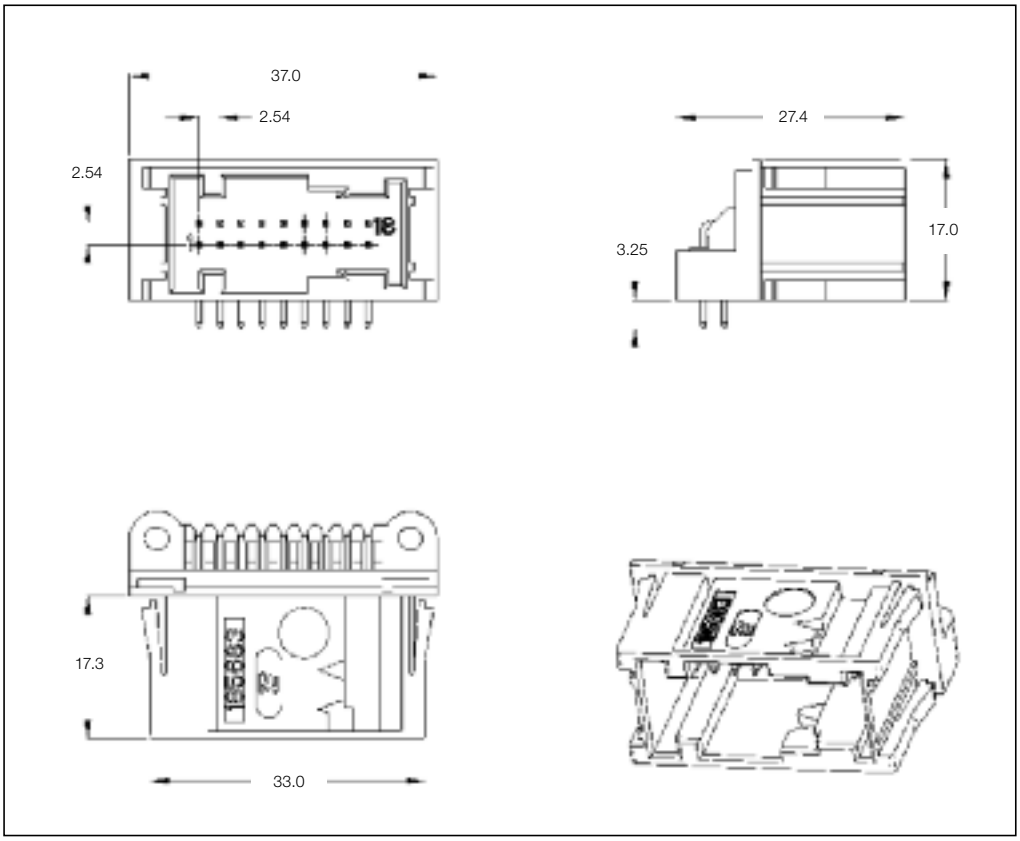

18 Position PCB Header

No. of Pos.	Keying Options	Housing Color	Part Numbers					
			PCB Header Right-Angle	PCB Header Vertical	Cover	Cover and Lever	Retainer Housing	Mating Counter Part
18	–	Black	185683-1	–	–	–	–	1379102-1
		White	185683-2	–				

Mating Receptacle Housing
See Page 4-29

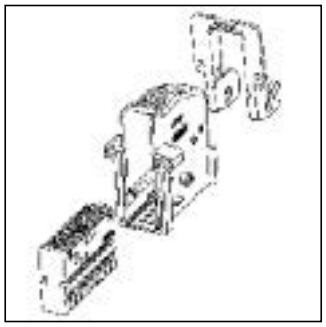

All specifications subject to change. Consult TE Connectivity for latest specifications.

Printed Circuit Board Headers

Technical Features

No. of Positions:
18 Positions

Housing Material:
PET GF30

Material and Finish:
Sn over Ni, tin plated

Product Specification:
108-18030

Application Specification:
114-18021

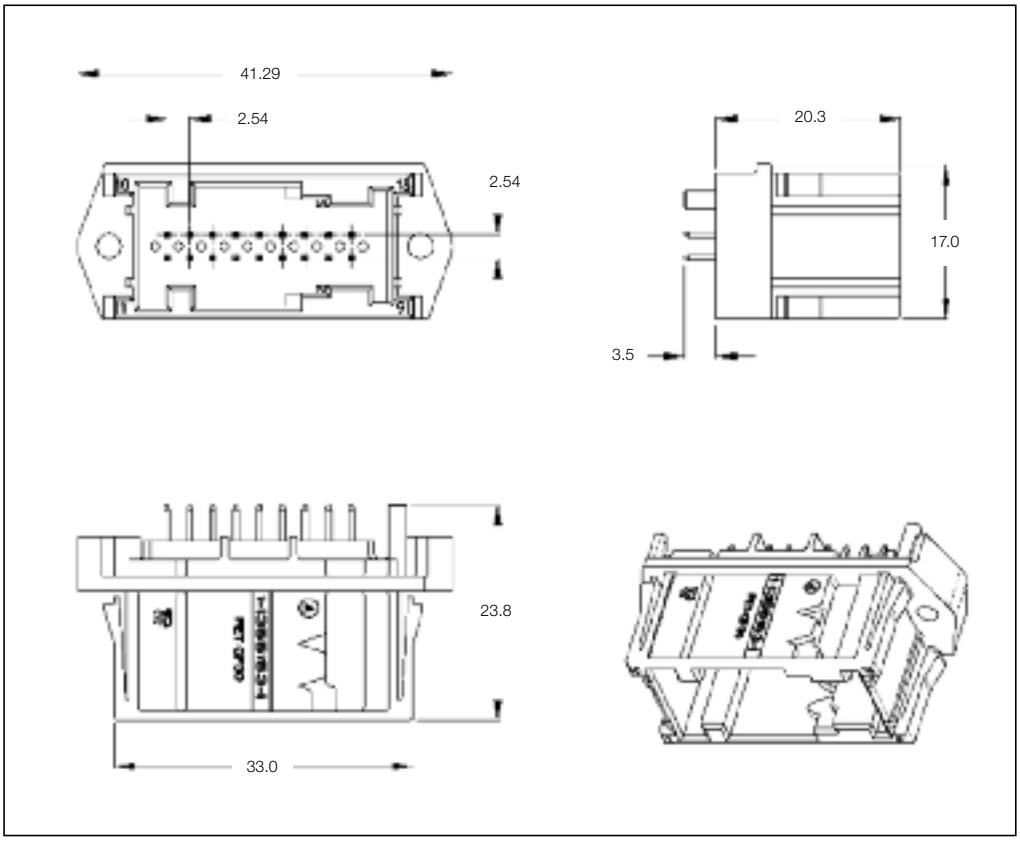

18 Position PCB Header

No. of Pos.	Keying Options	Housing Color	Part Numbers					
			PCB Header Right-Angle	PCB Header Vertical	Cover	Cover and Lever	Retainer Housing	Mating Receptacle Housing
18	A	Black	–	1-1355154-1	–	–	–	1355348-1
	B	Natural	–	2-1355154-1				
	B	Natural	–	3-1355154-1				

Mating Receptacle Housing
See Page 4-30

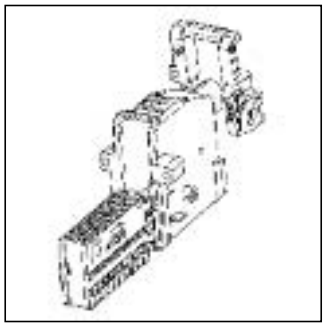

Printed Circuit Board Headers

Technical Features

No. of Positions:
18 Positions

Housing Material:
PBT GF30

Material and Finish:
CuFe, tin plated

Product Specification:
108-18214

Application Specification:
—

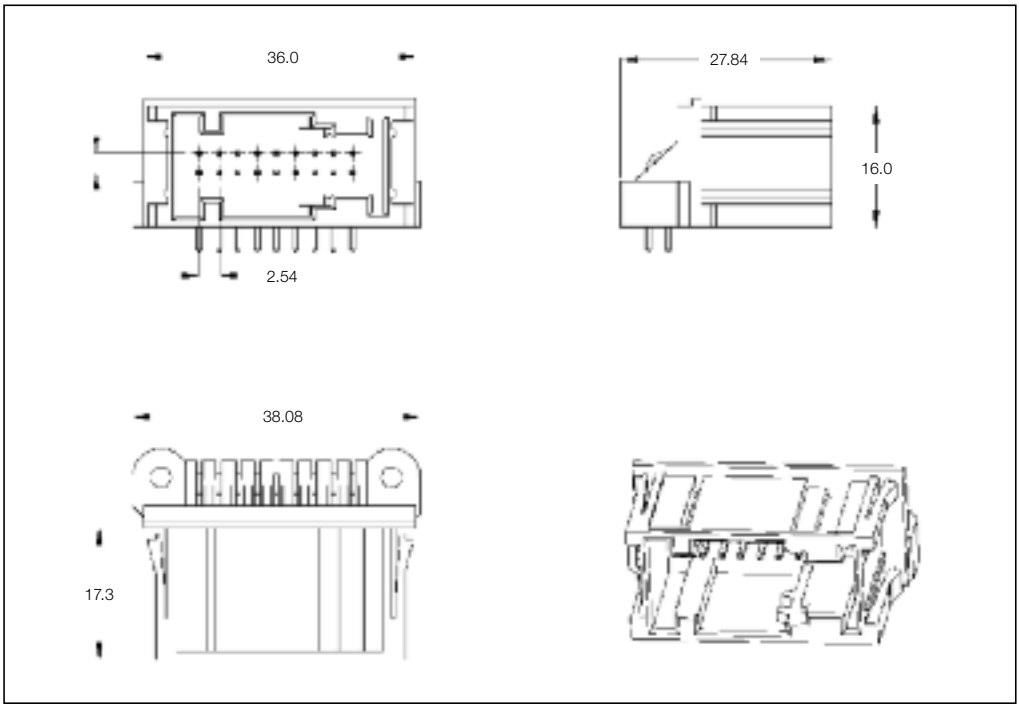

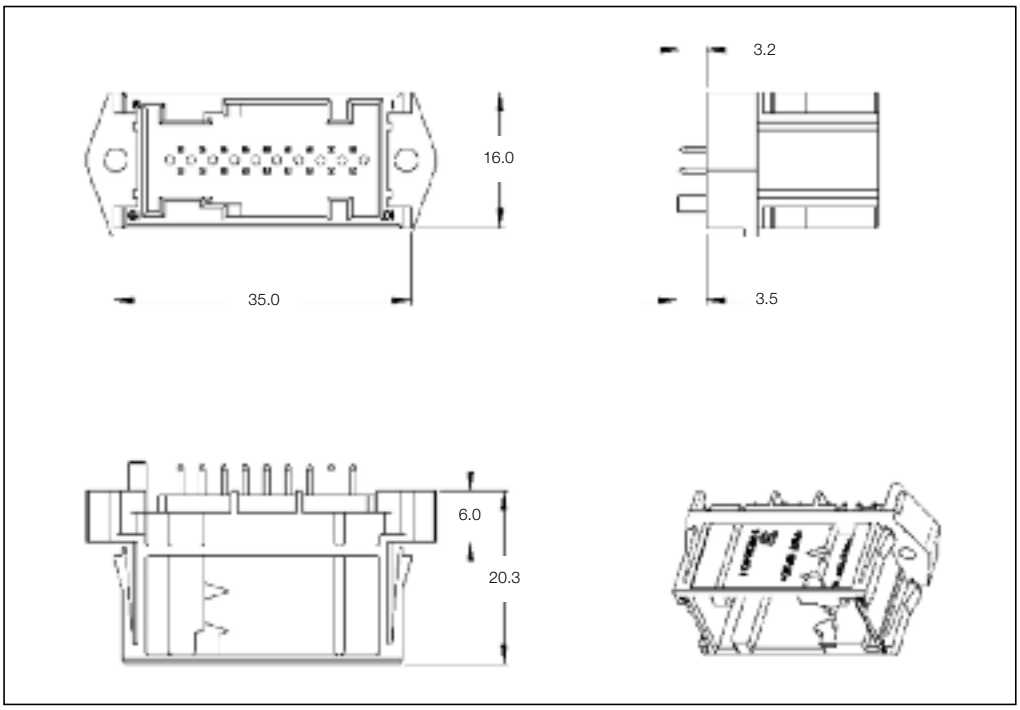

Mating Header
See Page 4-30

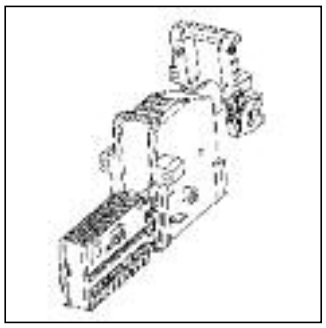

18 Position PCB Header

No. of Pos.	Keying Options	Housing Color	Part Numbers					
			PCB Header Right-Angle	PCB Header Vertical	Cover	Cover and Lever	Retainer Housing	Mating Receptacle Housing
18	F	Black	1-963539-1	1-963540-1	–	–	–	1355348-1
			1-963539-2	–				

All specifications subject to change. Consult TE Connectivity for latest specifications.

Printed Circuit Board Headers

Technical Features

No. of Positions:
18 Positions

Housing Material:
PBT GF30

Material and Finish:
CuZn, tin plated

Product Specification:
—

Application Specification:
—

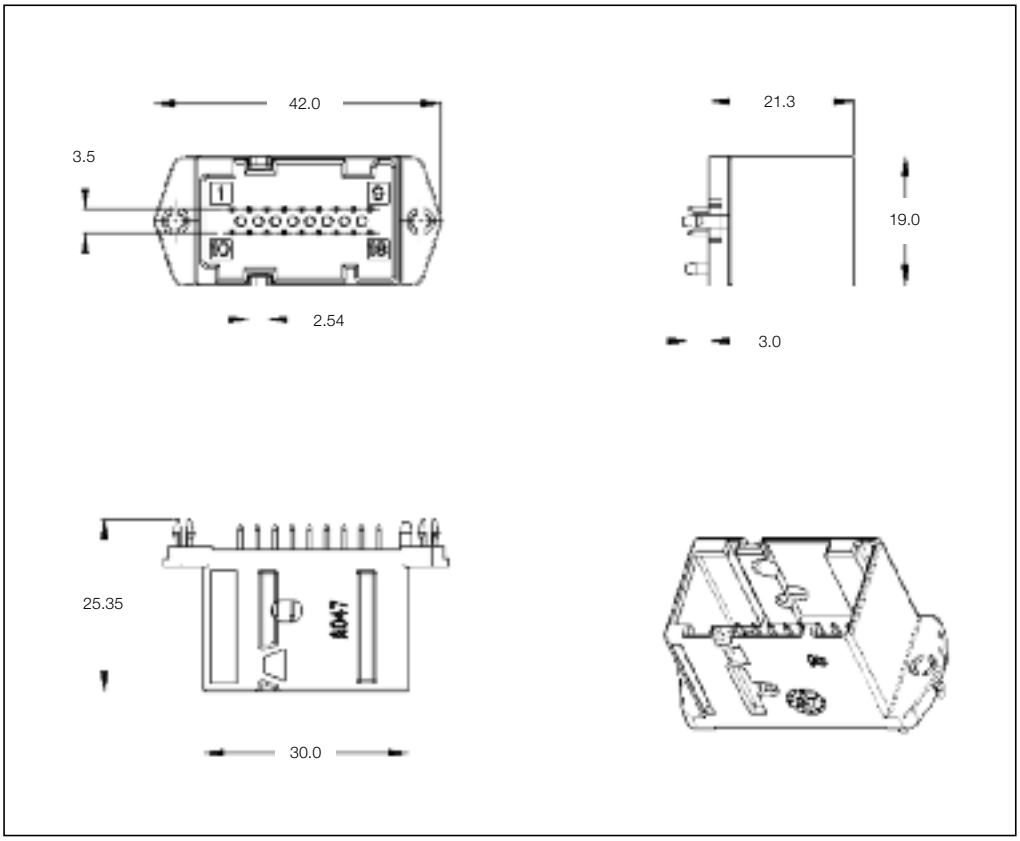

18 Position PCB Header

No. of Pos.	Keying Options	Housing Color	Part Numbers					
			PCB Header Right-Angle	PCB Header Vertical	Cover	Cover and Lever	Retainer Housing	Mating Receptacle Housing
18	–	Black	–	953466-1	–	–	–	284134-1
		Gray	–	953466-2				

Mating Receptacle Housing
See Page 4-31

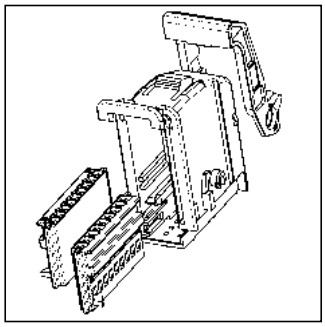

Printed Circuit Board Headers

Technical Features

No. of Positions:
18 Position Assembly

Housing Material:
PBT GF15

Material and Finish:
CuZn, tin plated

Product Specification:
108-20220
108-20224

Application Specification:
411-20056

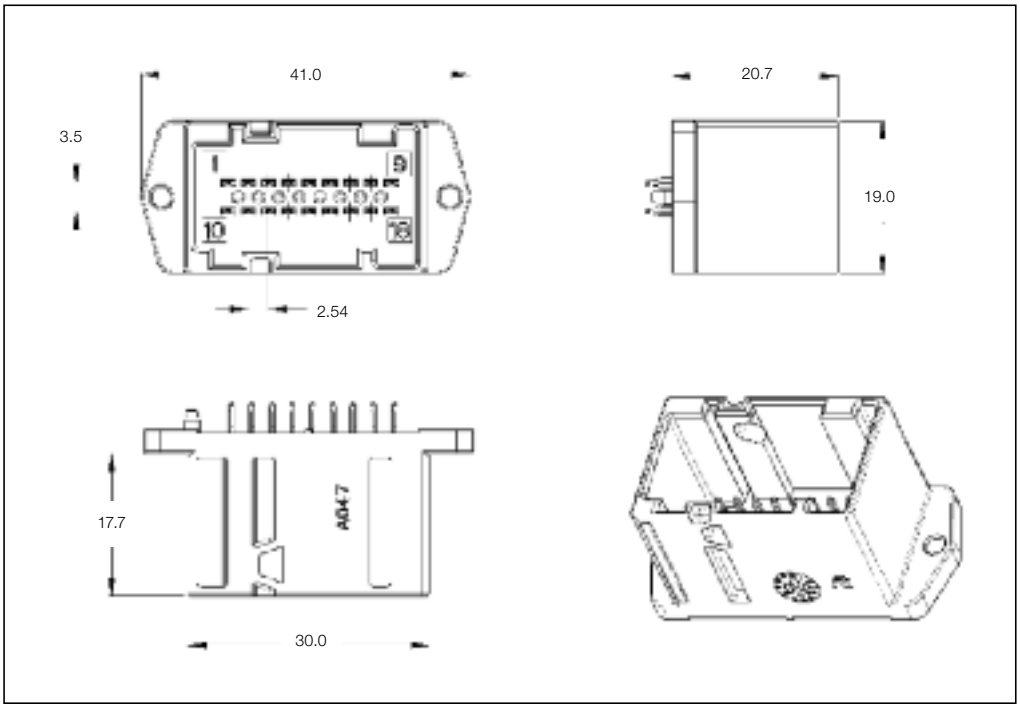

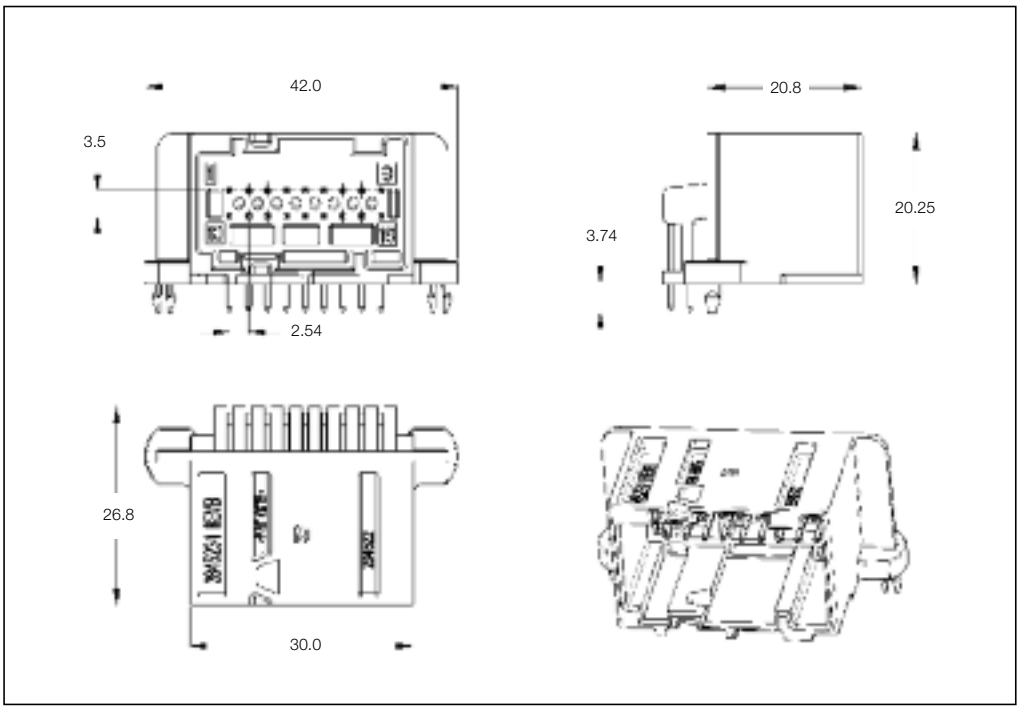

Mating Receptacle Housing
See Page 4-31

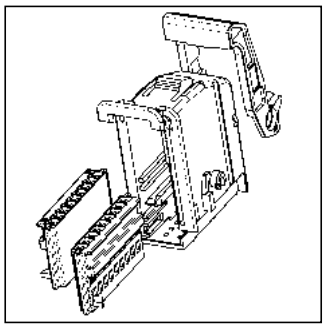

18 Position PCB Header

No. of Pos.	Keying Options	Housing Color	Part Numbers					
			PCB Header Right-Angle	PCB Header Vertical	Cover	Cover and Lever	Retainer Housing	Mating Receptacle Housing
18	–	Black	284522-1	284582-1	–	–	–	284134-1

All specifications subject to change. Consult TE Connectivity for latest specifications.

Printed Circuit Board Headers

Technical Features

No. of Positions:
18 Position ACTION PIN

Housing Material:
PET GF30

Material and Finish:
CuNiSi, tinned

Product Specification:
108-15210

Application Specification:
—

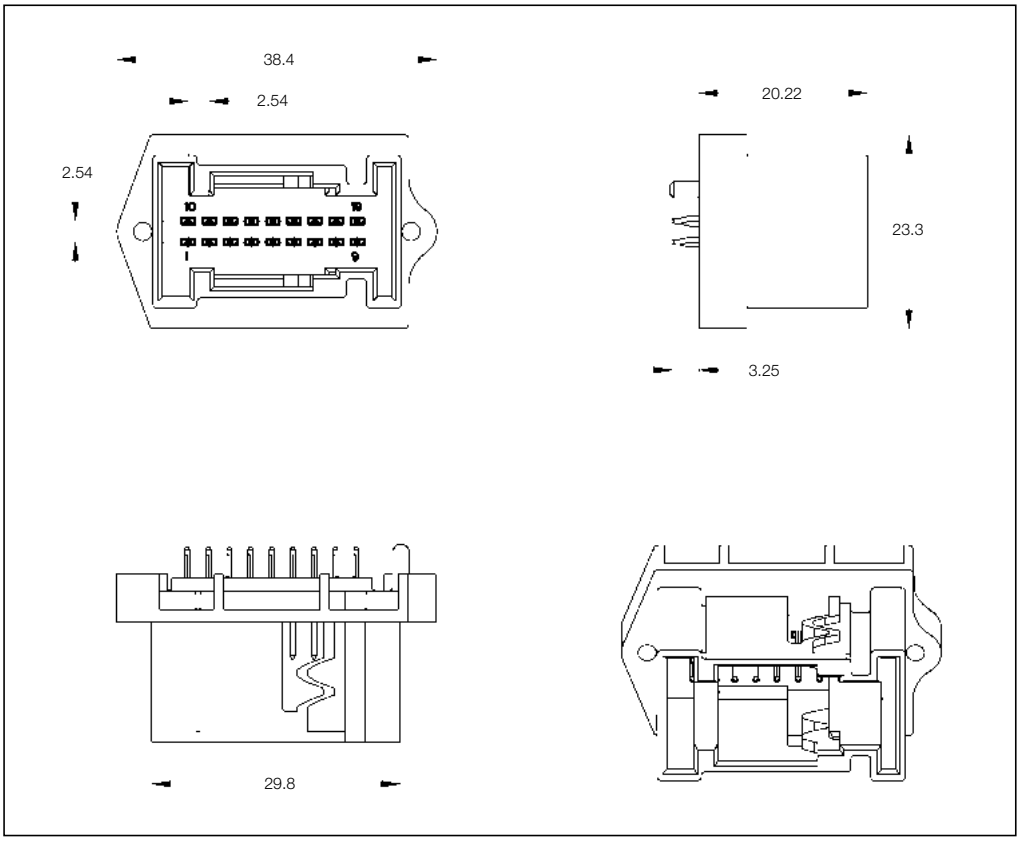

18 Position PCB Header

No. of Pos.	Keying Options	Housing Color	Part Numbers					
			PCB Header Right-Angle	PCB Header Vertical	Cover	Lever	Retainer Housing	Mating Receptacle Housing
18	–	Natural	–	967321-1	–	–	–	–

Printed Circuit Board Headers

Technical Features

No. of Positions:
18 Positions

Housing Material:
SPS GF

Material and Finish:
Bronze, tin plated

Product Specification:
108-15210

Application Specification:
—

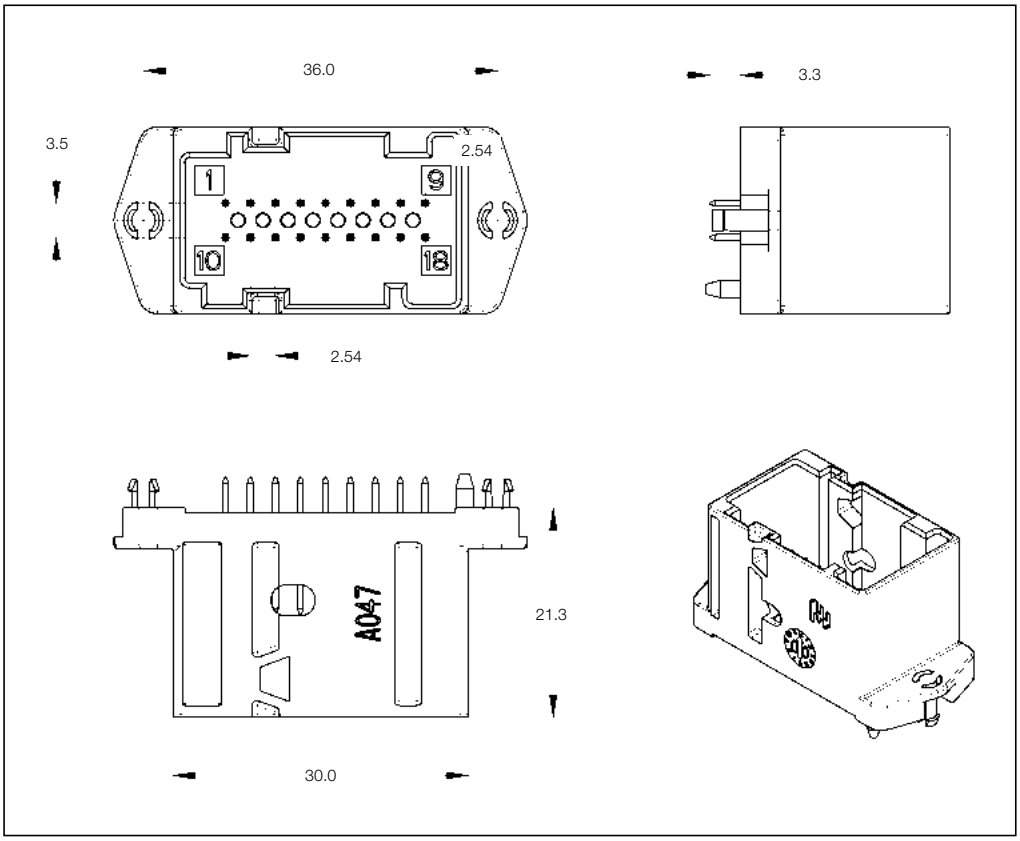

18 Position PCB Header

No. of Pos.	Keying Options	Housing Color	Part Numbers					
			PCB Header Right-Angle	PCB Header Vertical	Cover	Lever	Retainer Housing	Mating Receptacle Housing
18	–	Black	–	1379040-1	–	–	–	–

All specifications subject to change. Consult TE Connectivity for latest specifications.

Printed Circuit Board Headers

Technical Features

No. of Positions:
18 Positions

Housing Material:
PBT GF20

Material and Finish:
Copper Alloy, tinned

Product Specification:
—

Application Specification:
—

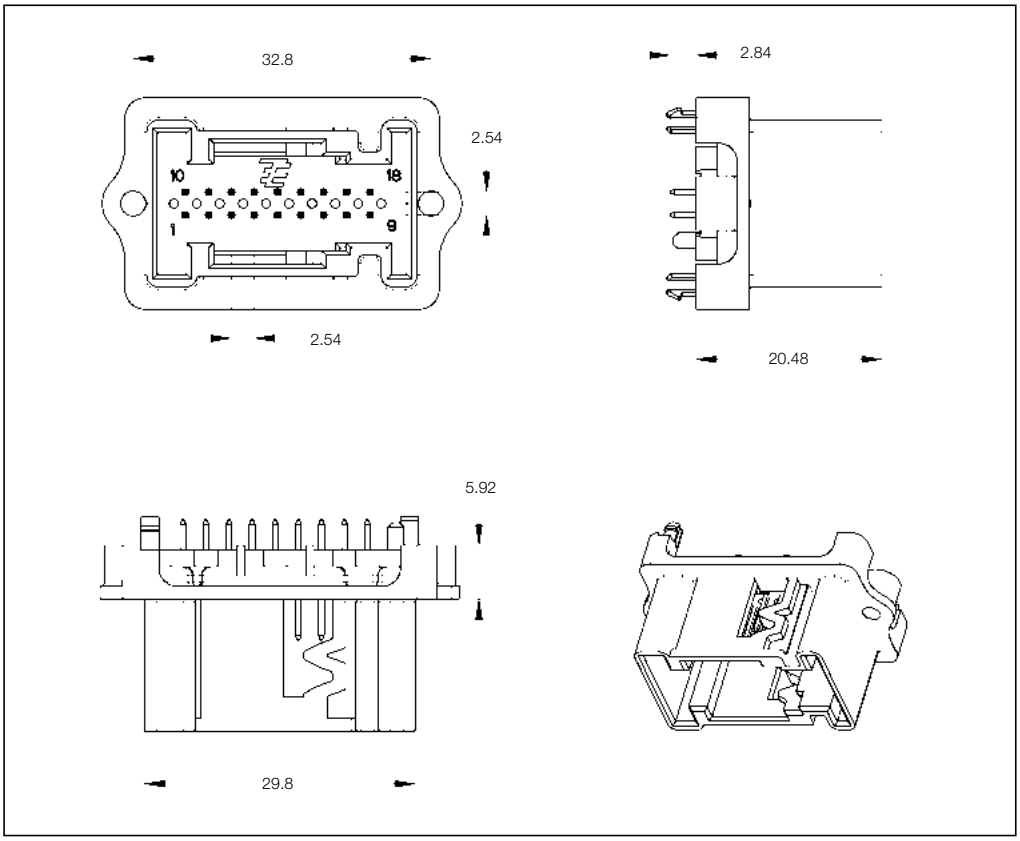

18 Position PCB Header

No. of Pos.	Keying Options	Housing Color	Part Numbers					
			PCB Header Right-Angle	PCB Header Vertical	Cover	Lever	Retainer Housing	Mating Receptacle Housing
18	A	Black	–	967618-1	–	–	–	–
	B	Natural	–	967618-2				
	A	Black	–	967618-3				
	B	Natural	–	967618-4				
	C	Blue	–	3-967618-1				
	C	Blue	–	3-967618-2				

Printed Circuit Board Headers

Technical Features

No. of Positions:
18 Positions

Housing Material:
PCT GF30

Material and Finish:
Copper Alloy, tinned

Product Specification:
—

Application Specification:
—

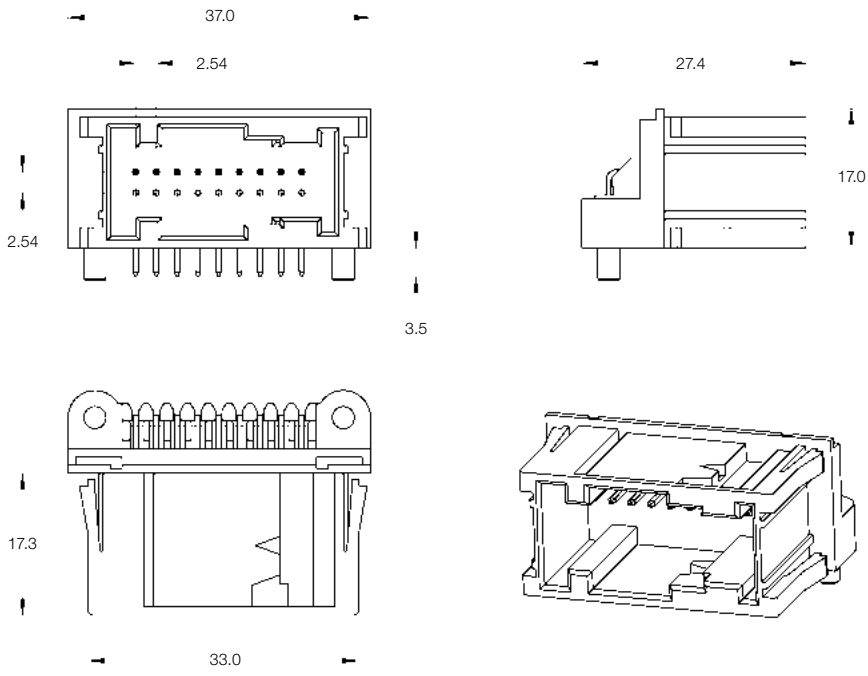

18 Position PCB Header

No. of Pos.	Keying Options	Housing Color	Part Numbers					
			PCB Header Right-Angle	PCB Header Vertical	Cover	Lever	Retainer Housing	Mating Receptacle Housing
18	–	Black	1801065-1	–	–	–	–	–
		White	1801065-2	–				
		Black	1-1801065-1	–				
		White	1-1801065-2	–				

All specifications subject to change. Consult TE Connectivity for latest specifications.

Printed Circuit Board Headers

Technical Features

No. of Positions:
18 Positions with Board Locks

Housing Material:
PET GF30

Material and Finish:
CuSn6, post tin plated

Product Specification:
108-15195

Application Specification:
—

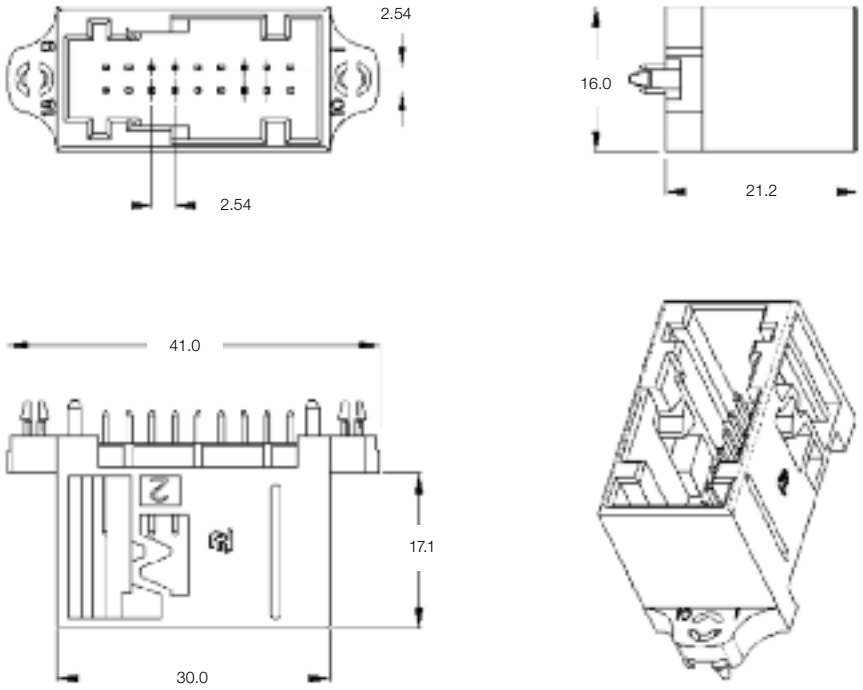

18 Position PCB Header

No. of Pos.	Keying Options	Housing Color	Part Numbers					
			PCB Header Right-Angle	PCB Header Vertical	Cover	Cover and Lever	Retainer Housing	Mating Counter Part
18	–	White (post no selective)	–	953264-1	–	–	–	–
		White (post selective)	–	1-953264-1				
		Black (post no selective)	–	953264-2				
		Black (post selective)	–	1-953264-2				

Printed Circuit Board Headers

Technical Features

No. of Positions:
18 Positions

Housing Material:
PBT GF20

Wire Size Range:
0.20–0.75 mm^2

Product Specification:
—

Application Specification:
—

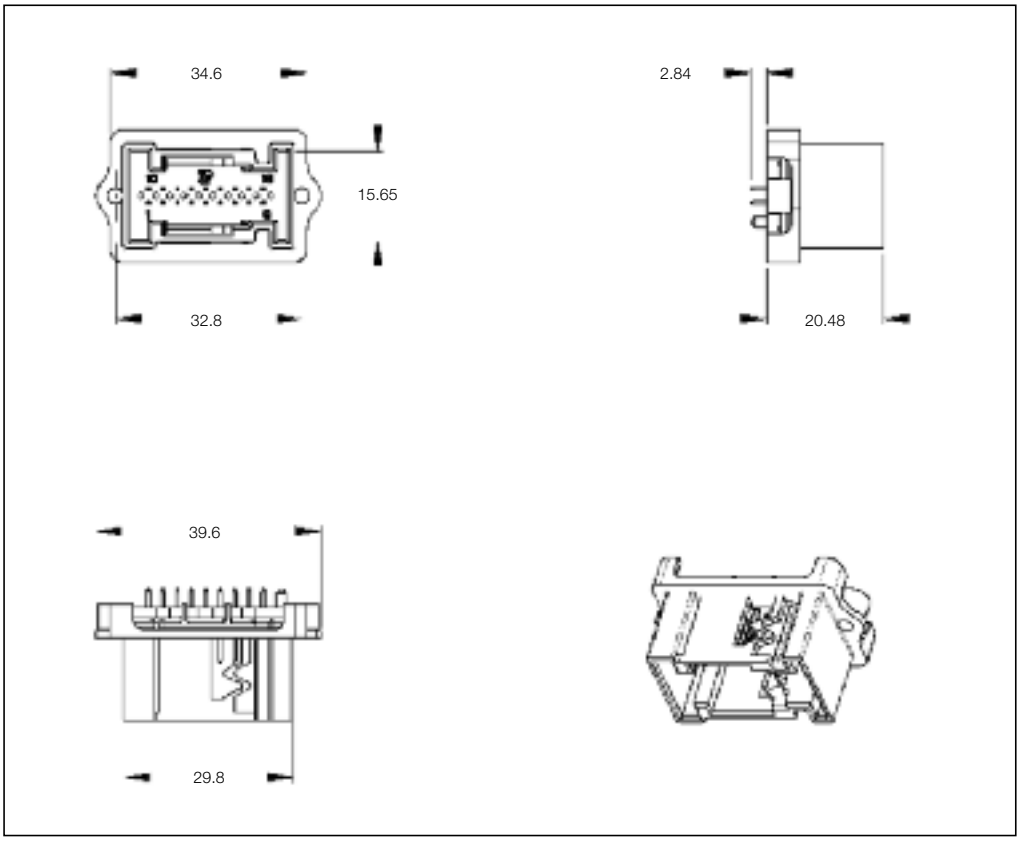

18 Position Pin Housings

No. of Pos.	Keying Options	Housing Color	Part Numbers				
			Pin Housing	Cover	Lever	Retainer Housing	Mating Receptacle Housing
18	A	Natural	967290-1	–	–	–	–
	B	Black	967290-2				

All specifications subject to change. Consult TE Connectivity for latest specifications.

Receptacle Housings

Technical Features

No. of Positions:
20 Positions

Housing Material:
PBT GF15

Wire Size Range:
0.20–0.75 mm^2

Product Specification:
—

Application Specification:
—

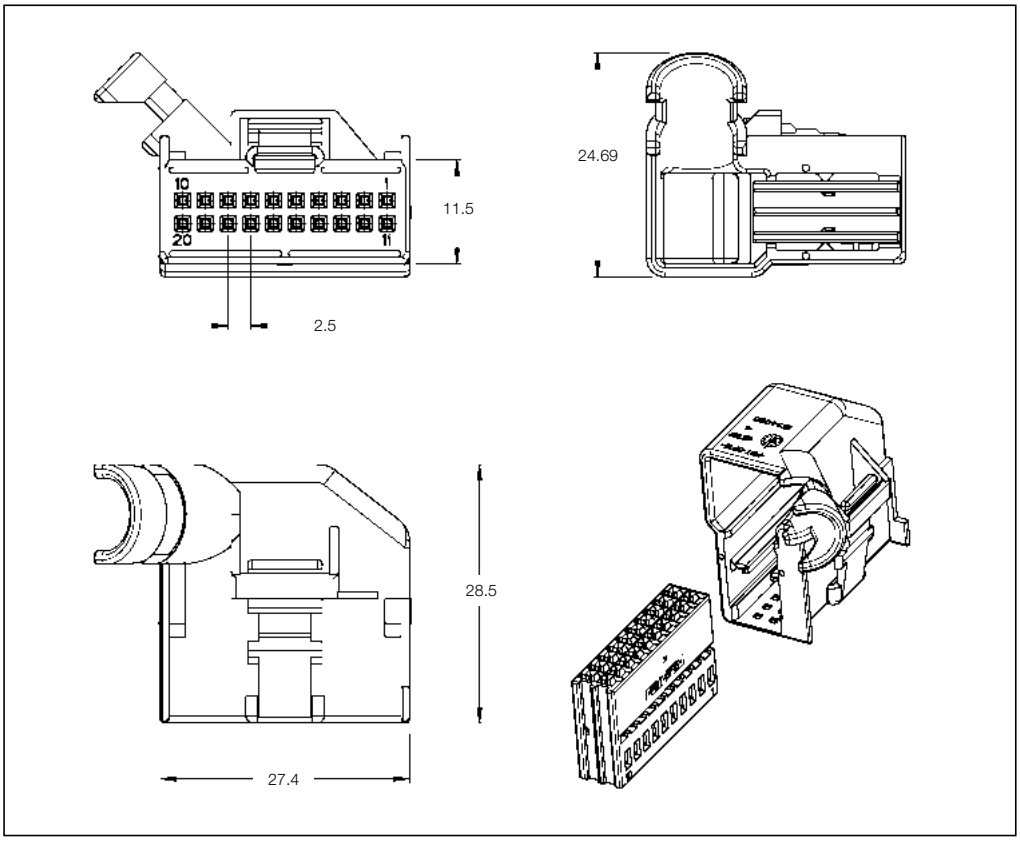

20 Position Receptacle Housings

No. of Pos.	Keying Options	Housing Color	Part Numbers						
			Receptacle Housing	Cover	Lever	Retainer Housing	Mating Pin Housing	Mating PCB Header Right-Angle	Mating PCB Header Vertical
20	–	Black	1534102-1	–	–	–	–	–	–
	A	Red	–	45° 1-1534095-1	–	–	–	–	–
	A	Black	–	90° 1-1534099-1					

Pin Housings

Technical Features

No. of Positions:
20 Positions

Housing Material:
PBT GF20

Wire Size Range:
0.20–0.75 mm^2

Product Specification:
108-15343

Application Specification:
411-15698

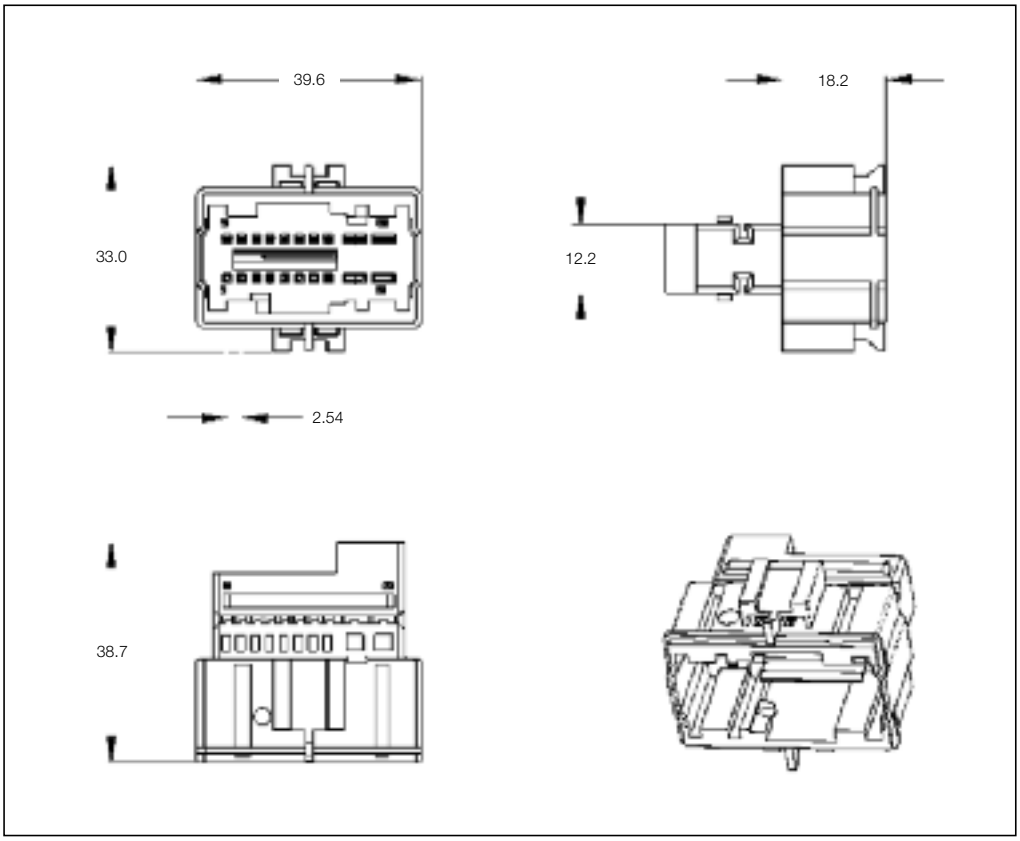

20 Position Pin Housings

No. of Pos.	Keying Options	Housing Color	Part Numbers				
			Pin Housing	Cover	Lever	Retainer Housing	Mating Receptacle Housing
20	–	Yellow	1379913-1	–	–	–	–
		Orange	1379913-2				
		Yellow	1-1379913-1				
		Orange	1-1379913-2				

All specifications subject to change. Consult TE Connectivity for latest specifications.

Pin Housings

Technical Features

No. of Positions:
20 Positions

Housing Material:
PBT GF20

Wire Size Range:
0.20–0.75 mm^2

Product Specification:
108-18267

Application Specification:
—

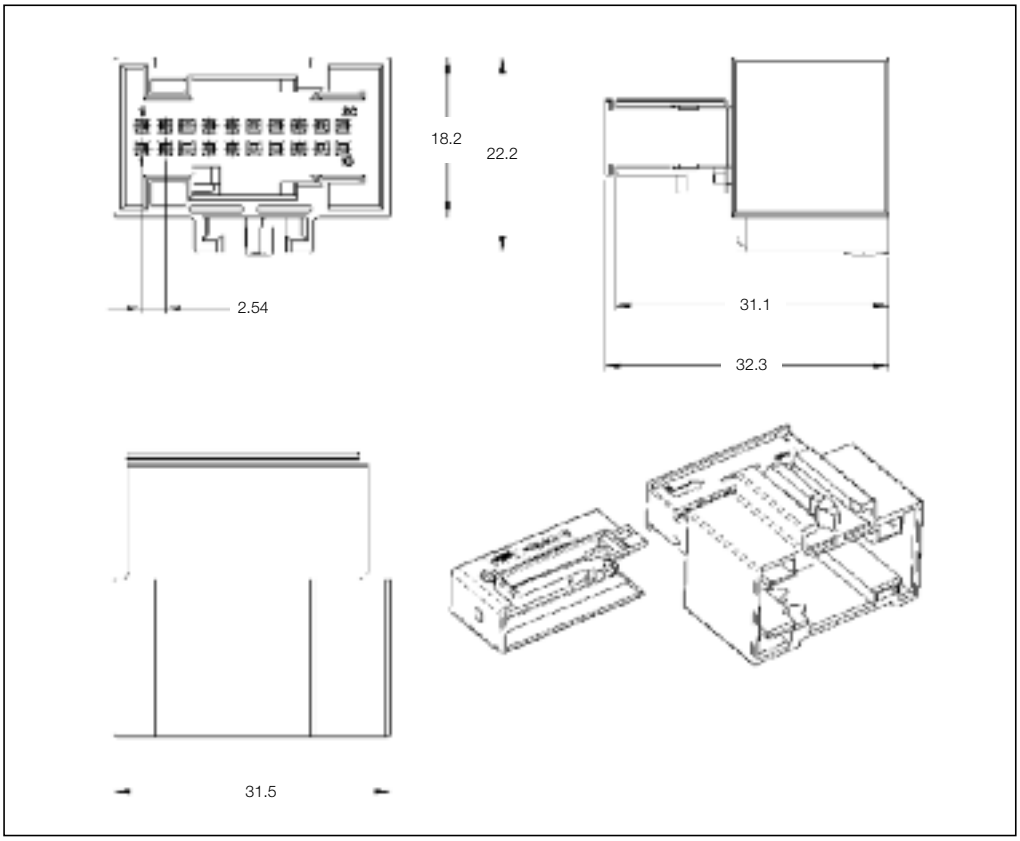

20 Position Pin Housing

No. of Pos.	Keying Options	Housing Color	Part Numbers				
			Pin Housing	Cover	Lever	Retainer Housing	Mating Receptacle Housing
20	A	Black	1-968684-1	968685-1	–	–	–

Pin Housings

4

Technical Features

No. of Positions:
20 Positions

Housing Material:
PA66 GF13

Wire Size Range:
0.20–0.75 mm^2

Product Specification:
108-18267

Application Specification:
—

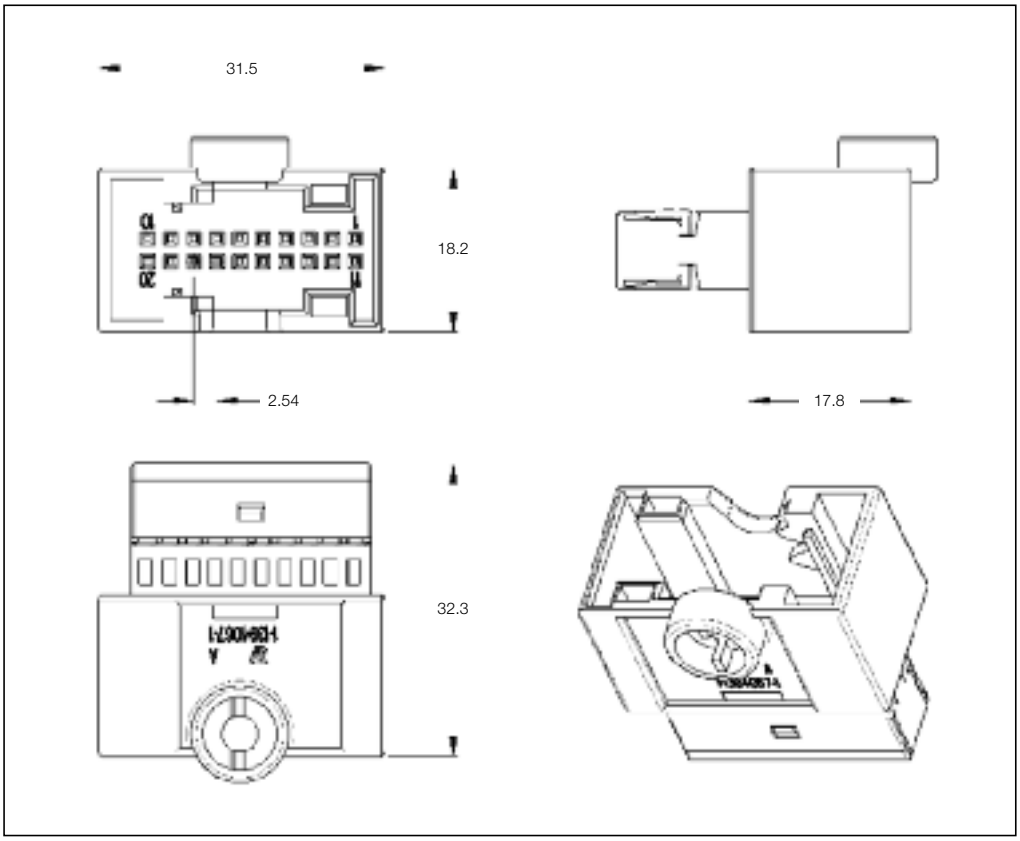

20 Position Pin Housings

No. of Pos.	Keying Options	Housing Color	Part Numbers				
			Pin Housing	Cover	Lever	Retainer Housing	Mating Receptacle Housing
20	–	Black	1-1394067-1 2-1394067-1	–	–	–	–

All specifications subject to change. Consult TE Connectivity for latest specifications.

Printed Circuit Board Headers

Technical Features

Application:
Body Computer

No. of Positions:
20 Positions

Housing Material:
PA66 GF30

Material and Finish:
CuSn4, tin plated

Product Specification:
108-20206

Application Specification:
—

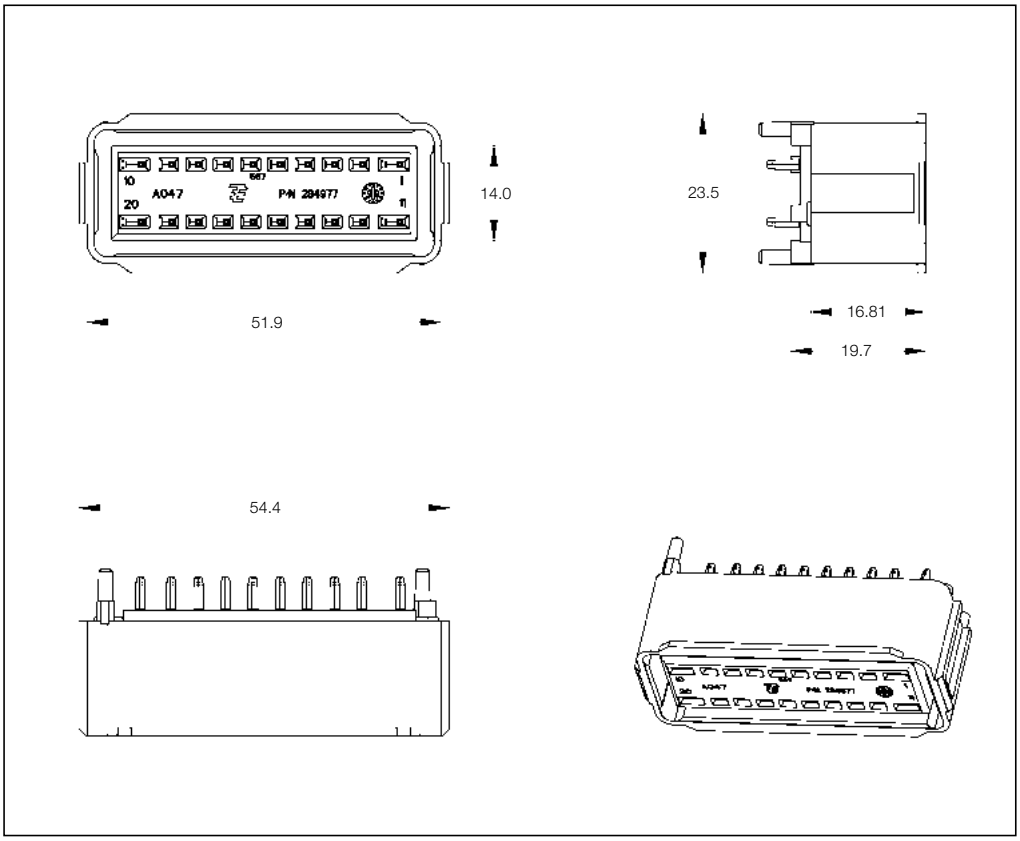

20 Position PCB Header

No. of Pos.	Keying Options	Housing Color	Part Numbers					
			PCB Header Right-Angle	PCB Header Vertical	Cover	Lever	Retainer Housing	Mating Receptacle Housing
20	–	Black	–	284977-1	–	–	–	–

Printed Circuit Board Headers

Technical Features

Application:
Body Computer

No. of Positions:
20 Positions

Housing Material:
PA66 GF30

Material and Finish:
Cu Alloy, tin plated

Product Specification:
108-20208

Application Specification:
—

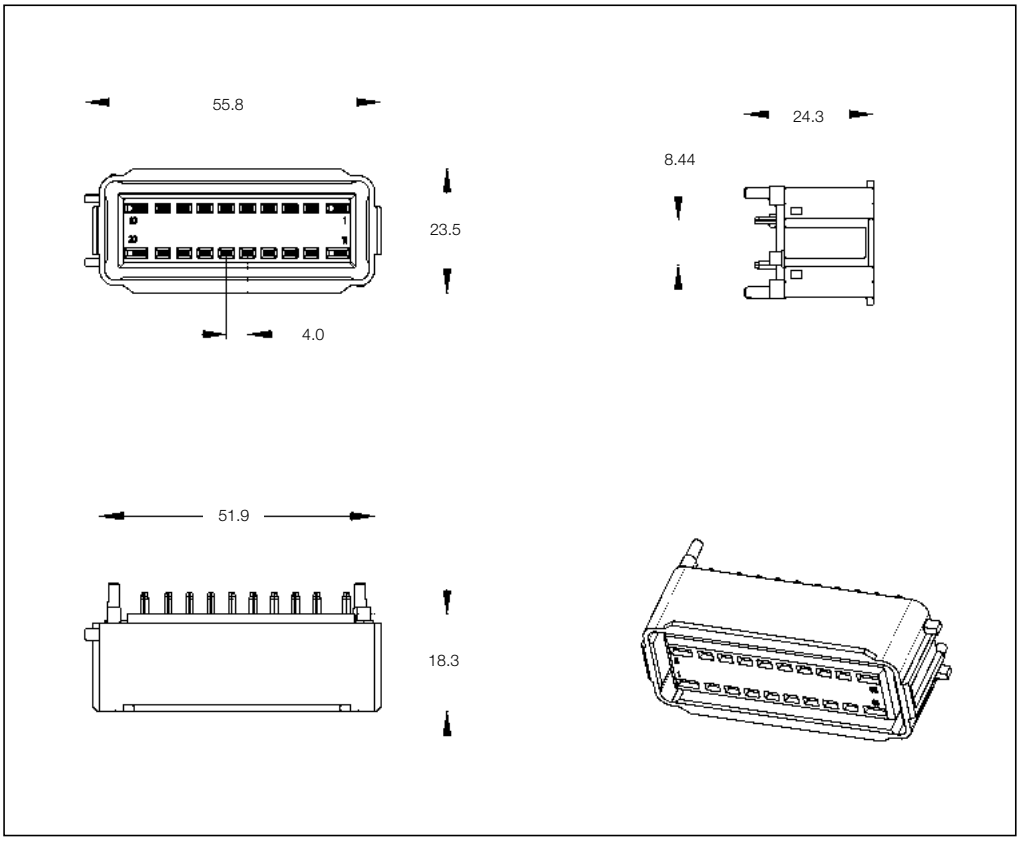

20 Position PCB Header

No. of Pos.	Keying Options	Housing Color	Part Numbers					
			PCB Header Right-Angle	PCB Header Vertical	Cover	Lever	Retainer Housing	Mating Receptacle Housing
20	–	Black	–	1599178-1	–	–	–	–

All specifications subject to change. Consult TE Connectivity for latest specifications.

Receptacle Housings

Technical Features

No. of Positions:
22 Positions

Housing Material:
PBT GF15

Wire Size Range:
0.20–0.75 mm^2

Product Specification:
—

Application Specification:
—

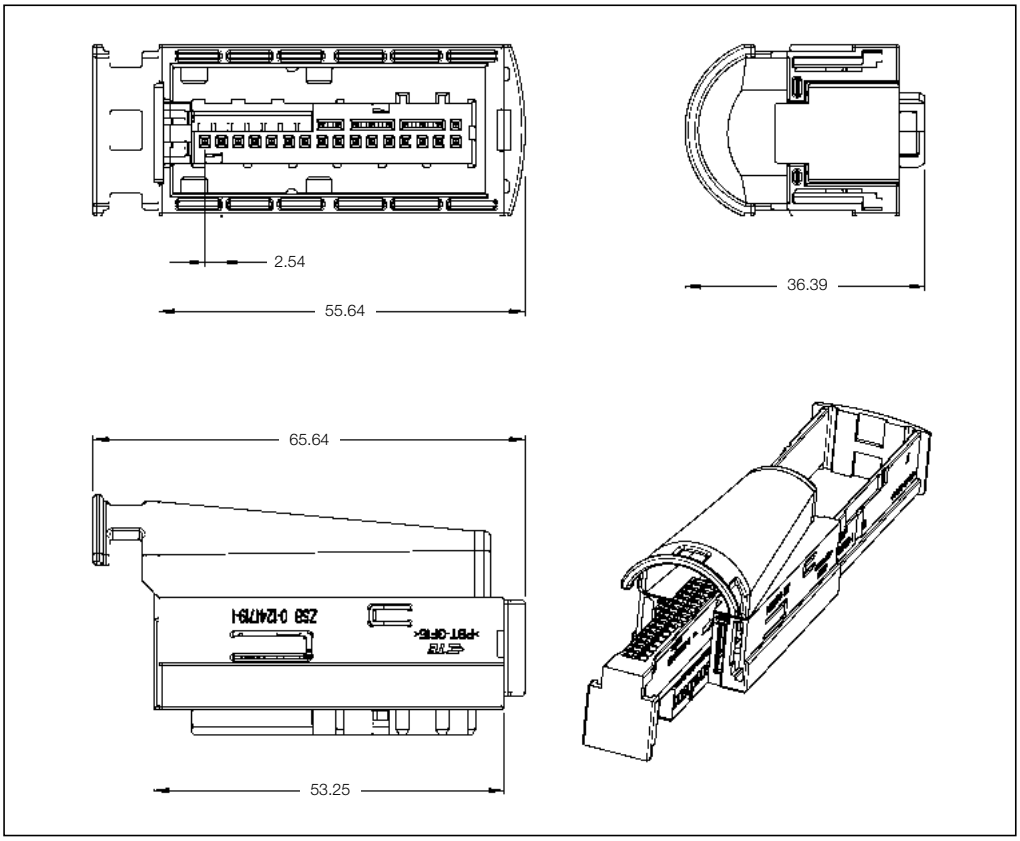

22 Position Receptacle Housings

No. of Pos.	Keying Options	Housing Color	Part Numbers						
			Receptacle Housing	Cover	Lever	Retainer Housing	Mating Pin Housing	Mating PCB Header Right-Angle	Mating PCB Header Vertical
22	–	Yellow	1241726-1	–	–	–	–	–	–
		Black	–	1241719-1					

Receptacle Housings

Technical Features

Application:
Airbag

No. of Positions:
24 Position Assembly

Housing Material:
PA66 GF13

Wire Size Range:
0.35–0.5 mm^2

Product Specification:
108-20202

Application Specification:
411-20054

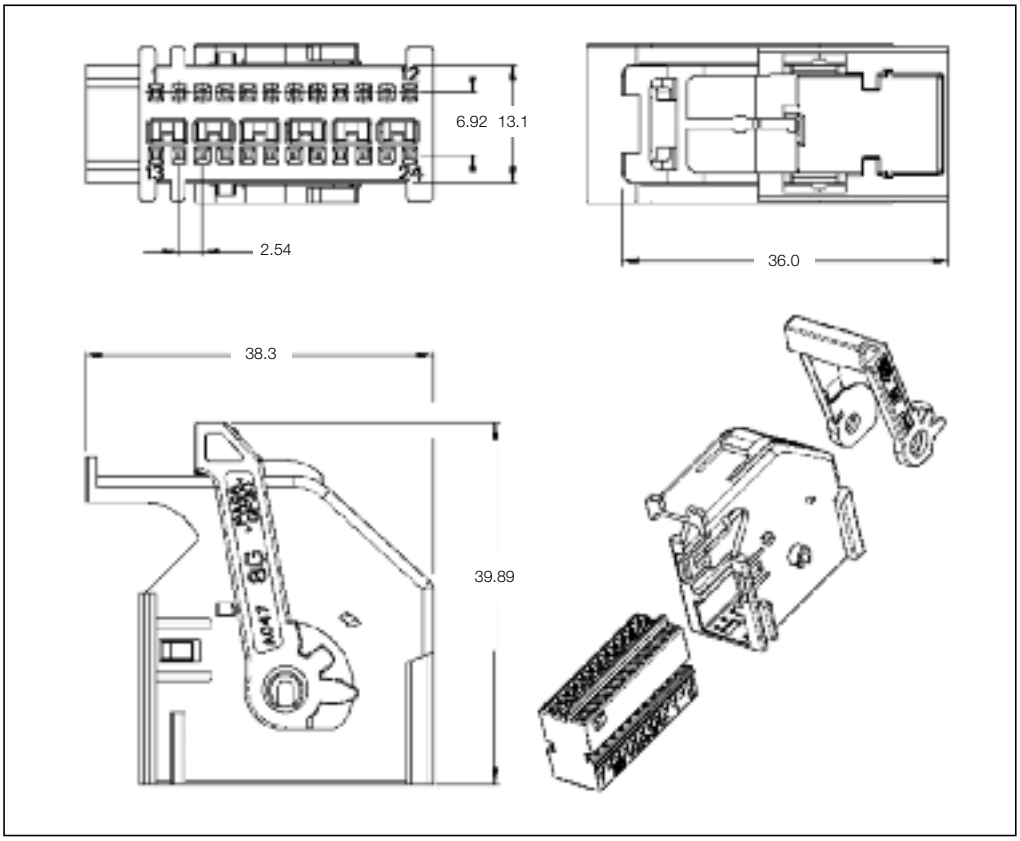

24 Position Receptacle Housings

No. of Pos.	Keying Options	Housing Color	Part Numbers							
			Receptacle Housing	Cover	Locking Device	Cover and Lever	Retainer Housing	Mating Pin Housing	Mating PCB Header Right-Angle	Mating PCB Header Vertical
24	A	Black	284223-4	–	–	–	–	–	–	–
	B	Gray	284223-3							
	C	Brown	284223-5							
	D	Blue	284223-6							
	AD-Ab	White	284223-7							

All specifications subject to change. Consult TE Connectivity for latest specifications.

Receptacle Housings

Technical Features

Application:
Airbag

No. of Positions:
24 Positions

Housing Material:
PA66 GF13

Wire Size Range:
0.20–0.75 mm^2

Product Specification:
108-20202

Application Specification:
114-15077

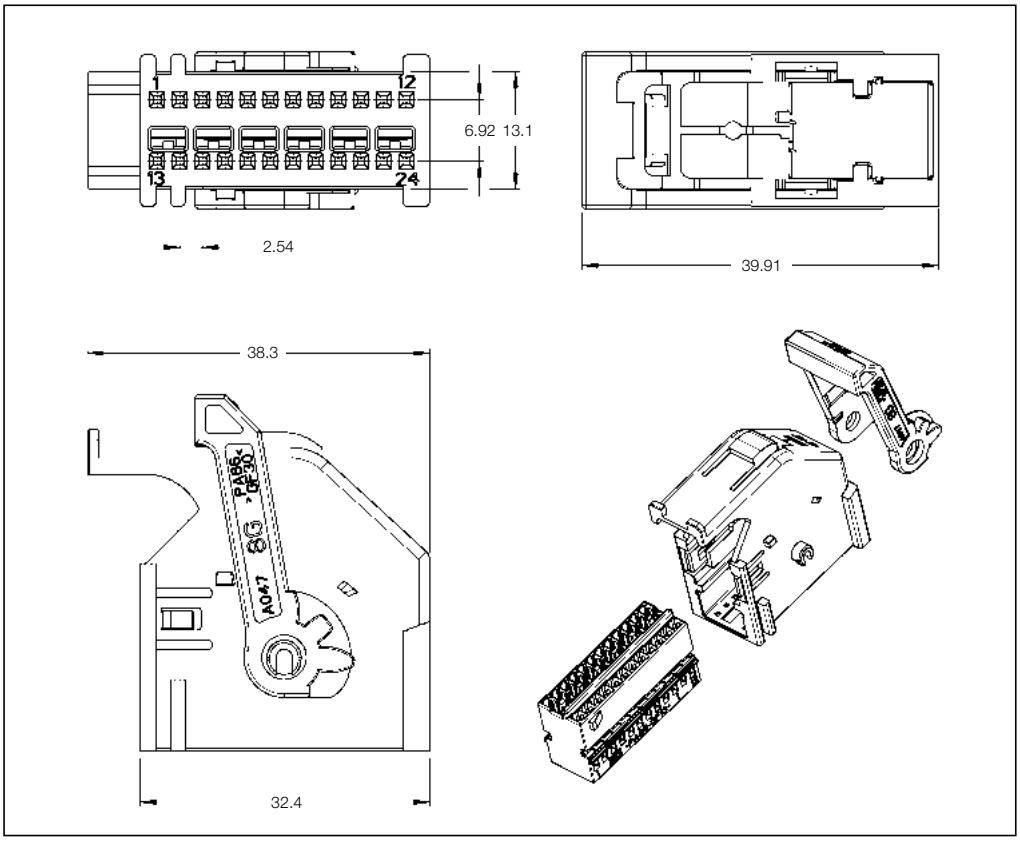

24 Position Receptacle Housings

No. of Pos.	Keying Options	Housing Color	Part Numbers						
			Receptacle Housing	Cover	Lever	Retainer Housing	Mating Pin Housing	Mating PCB Header Right-Angle	Mating PCB Header Vertical
24	–	Gray	284224-1	284714-1	–	–	–	–	–
		Black	284224-2	284714-2					
		Brown	284224-5	284714-3					
		Blue	284224-6	284714-4					

Receptacle Housings

Technical Features

Application:
Airbag Kit

No. of Positions:
24 Positions

Housing Material:
PA66 GF13

Wire Size Range:
0.20–0.75 mm^2

Product Specification:
108-20202

Application Specification:
114-15077

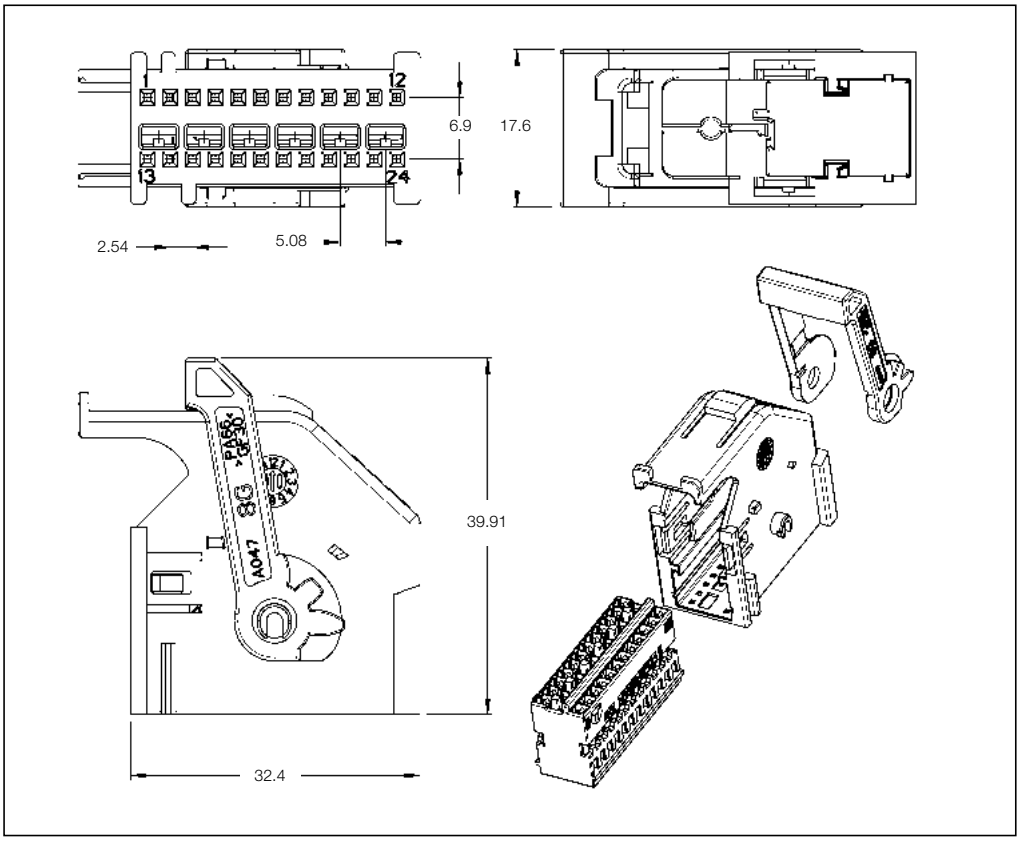

24 Position Receptacle Housings

No. of Pos.	Keying Options	Housing Color	Part Numbers						
			Receptacle Housing	Cover	Lever	Retainer Housing	Mating Pin Housing	Mating PCB Header Right-Angle	Mating PCB Header Vertical
24	–	Green	1745034-1	–	–	–	–	–	–
		Orange	1745034-2						
		Violet	1745034-3						
		Yellow	1745034-4						
		Pink	1745034-5						

All specifications subject to change. Consult TE Connectivity for latest specifications.

Printed Circuit Board Headers

Technical Features

No. of Positions:
24 Positions

Housing Material:
PA66 GF13

Material and Finish:
See customer drawing

Product Specification:
—

Application Specification:
—

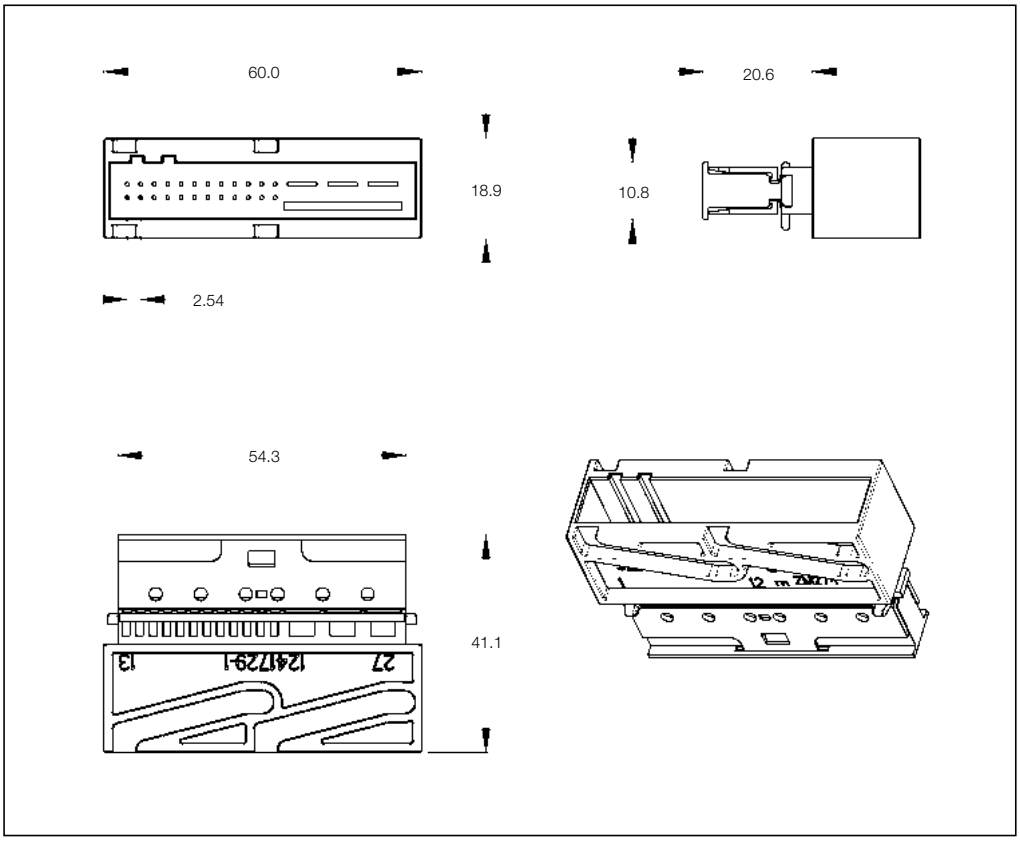

24 Position PCB Header

No. of Pos.	Keying Options	Housing Color	Part Numbers					
			PCB Header Right-Angle	PCB Header Vertical	Cover	Lever	Retainer Housing	Mating Receptacle Housing
24	–	Black	–	1241729-1	Cable out 90° 1452690-1 Cable out 180° 1355543-1	–	–	–

Receptacle Housings

Technical Features

No. of Positions:
26 Positions (1st Generation)

Housing Material:
PBT GF20

Wire Size Range:
0.35–0.75 mm^2

Product Specifications:
108-15090 Cover + Rec. Housing
108-15134 Locking Device

Application Specifications:
411-15511 Receptacle Housing
411-15554 Locking Device

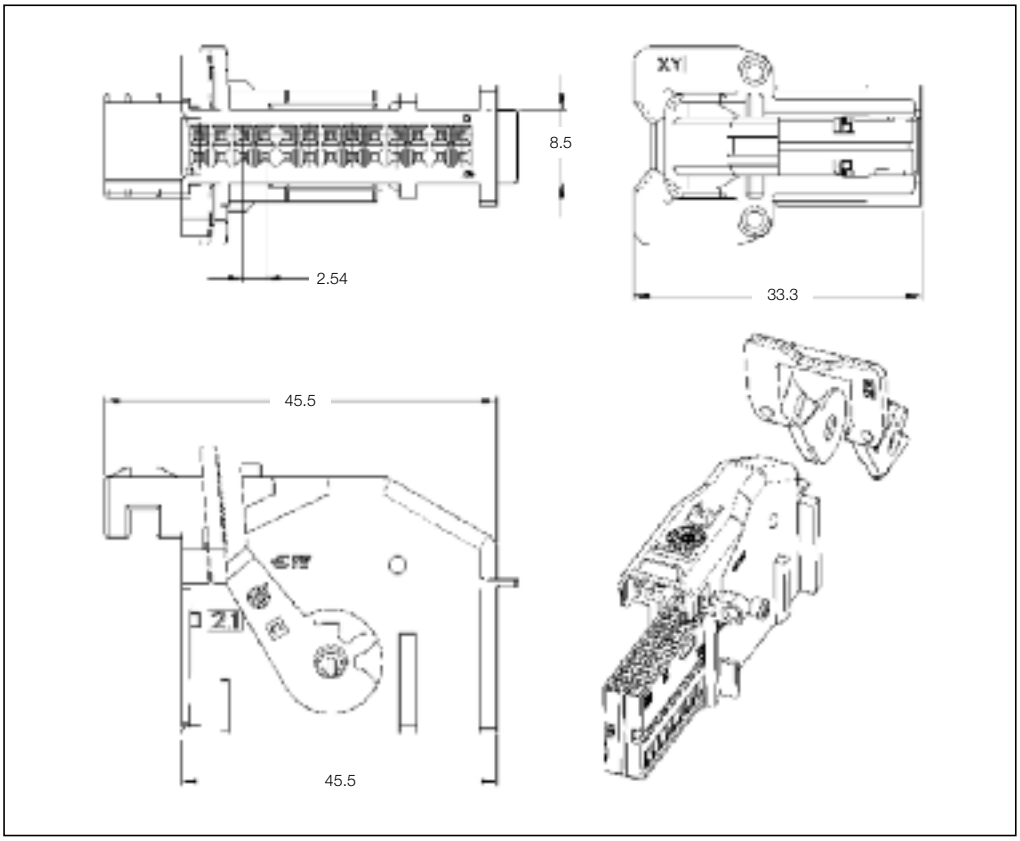

26 Position Receptacle Housings

No. of Pos.	Keying Options	Housing Color	Part Numbers: Receptacle Housing	Cover	Locking Device	Cover and Lever	Retainer Housing	Mating Pin Housing	Mating PCB Header: Right-Angle	Vertical
26	–	Black	144935-1	–	144936-1	–	–	953736-1	185890-1 185534-1 185904-1	185226-1 185454-1 144930-1 953236-1 953472-1
		Yellow	–	144934-1	–	–	–	–		
		Blue	–	144934-2	–	–	–	–		
									For application see customer drawing	

Mating Headers
See Page 5-14–5-19

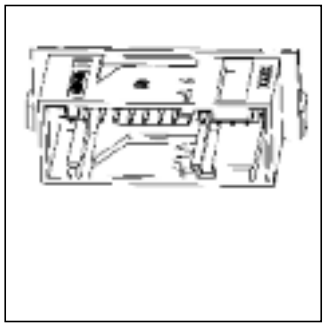

All specifications subject to change. Consult TE Connectivity for latest specifications.

Receptacle Housings

Technical Features

No. of Positions:
26 Positions (2nd Generation)

Housing Material:
PBT GF20

Wire Size Range:
0.35–0.75 mm^2

Product Specification:
108-15158

Application Specification:
411-15581

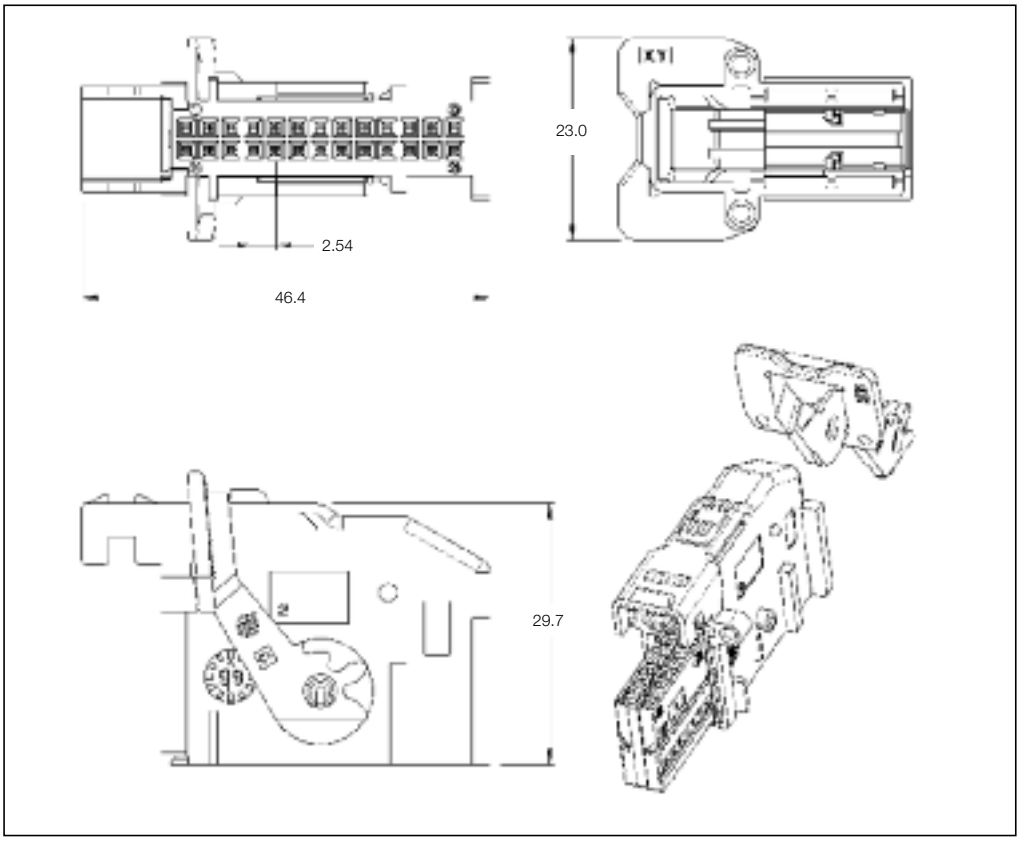

26 Position Receptacle Housings

No. of Pos.	Keying Options	Housing Color	Part Numbers: Receptacle Housing	Cover	Locking Device	Cover and Lever	Retainer Housing	Mating Pin Housing	Mating PCB Header Right-Angle	Mating PCB Header Vertical
26	–	Black	185875-1	–	–	–	–	–	185890-1 185534-1 185904-1	185226-1 185454-1 144930-1 953236-1 953472-1
		Yellow	–	185879-1	–	–	–	953736-1		
		Blue	–	185879-2	–	–	–	953736-2		
		Red	–	185879-3	–	–	–	953736-3		
		Green	–	185879-4	–	–	–	953736-4	For application see customer drawing	

Mating Headers
See Page 5-14–5-19

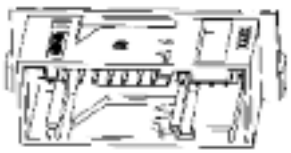

Receptacle Housings

Technical Features

No. of Positions:
26 Positions
for MQS / AMP MCP 2.8

Housing Material:
PA6/GB20 GF10

Wire Size Range:
0.20–0.75 mm^2

Product Specification:
—

Application Specification:
—

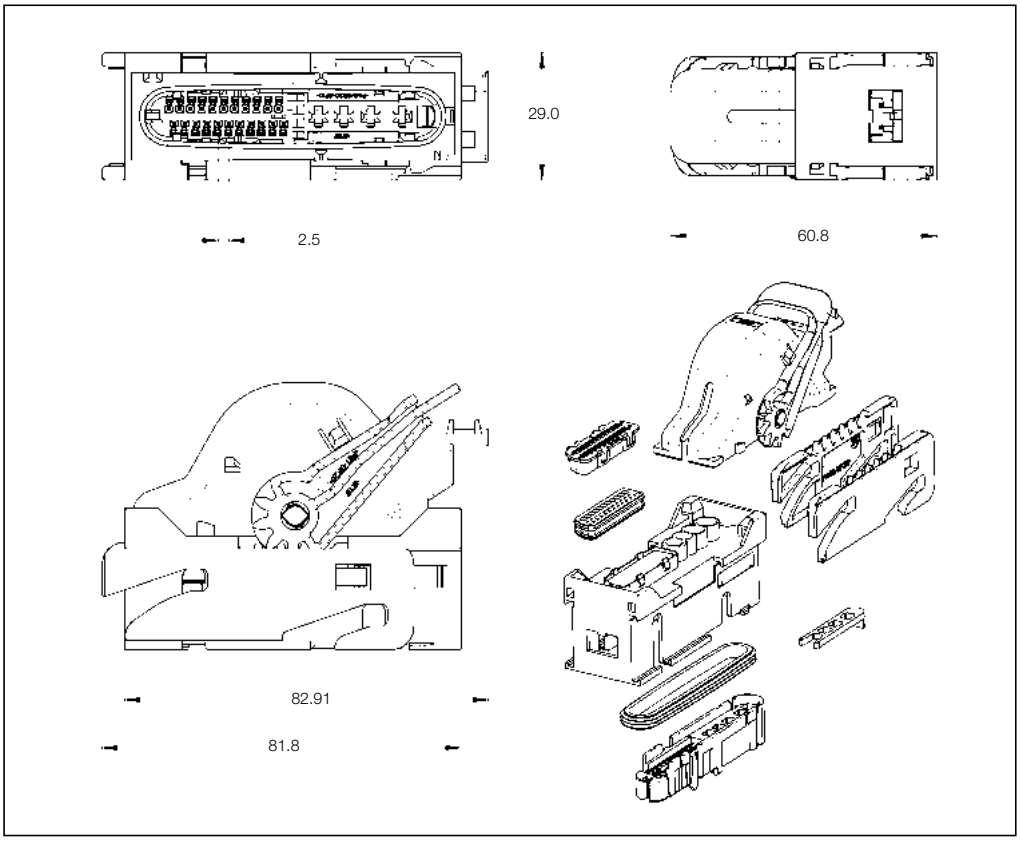

26 Position Receptacle Housings

No. of Pos.	Keying Options	Housing Color	Part Numbers						
			Receptacle Housing	Cover	Lever	Retainer Housing	Mating Pin Housing	Mating PCB Header Right-Angle	Mating PCB Header Vertical
26	–	Black	1897344-2	1897352-2	–	1897355-3	–	–	–

All specifications subject to change. Consult TE Connectivity for latest specifications.

Receptacle Housings

Technical Features

No. of Positions:
52 Positions (2 x 26)

Housing Material:
PBT GF15

Wire Size Range:
0.20–0.75 mm^2

Product Specification:
108-18400

Application Specification:
—

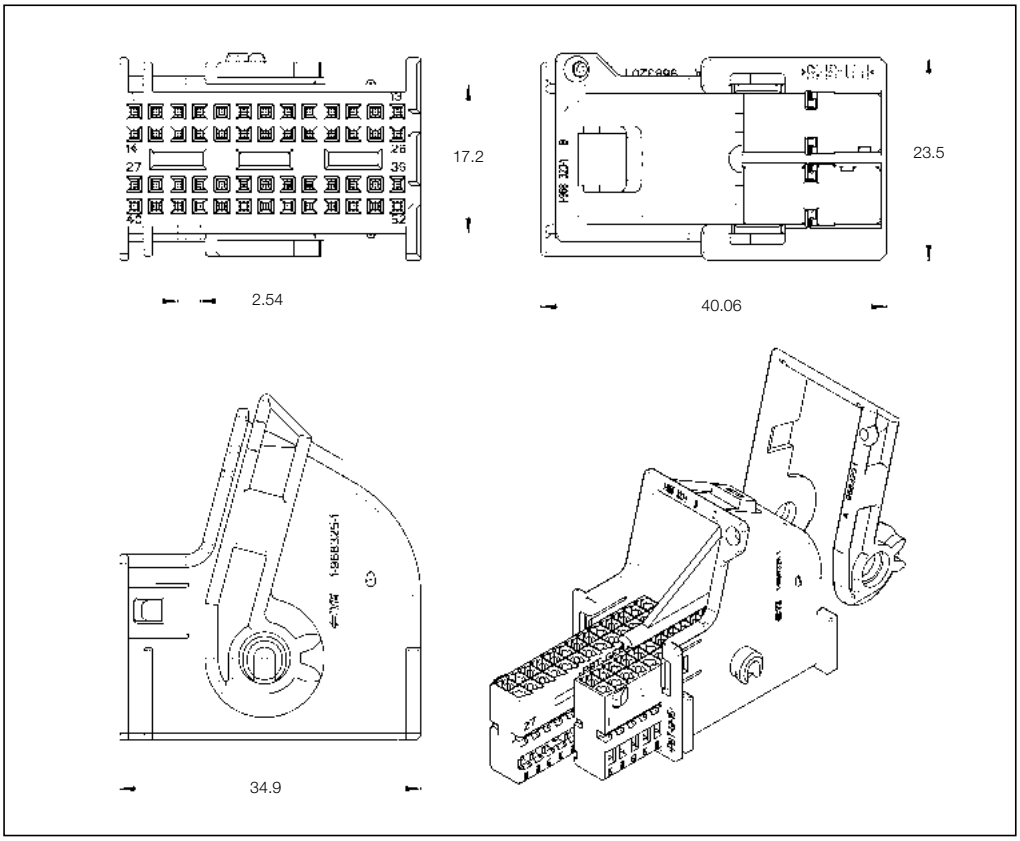

26 Position Receptacle Housings

No. of Pos.	Keying Options	Housing Color	Part Numbers						
			Receptacle Housing	Cover	Lever	Retainer Housing	Mating Pin Housing	Mating PCB Header Right-Angle	Mating PCB Header Vertical
26	–	Black	1-968326-1	1-968325-3	–	–	–	–	–
26		Gray	2-968326-1	–					

Receptacle Housings

Technical Features

No. of Positions:
26 Positions

Housing Material:
PBT GF15

Wire Size Range:
0.20–0.75 mm^2

Product Specification:
—

Application Specification:
—

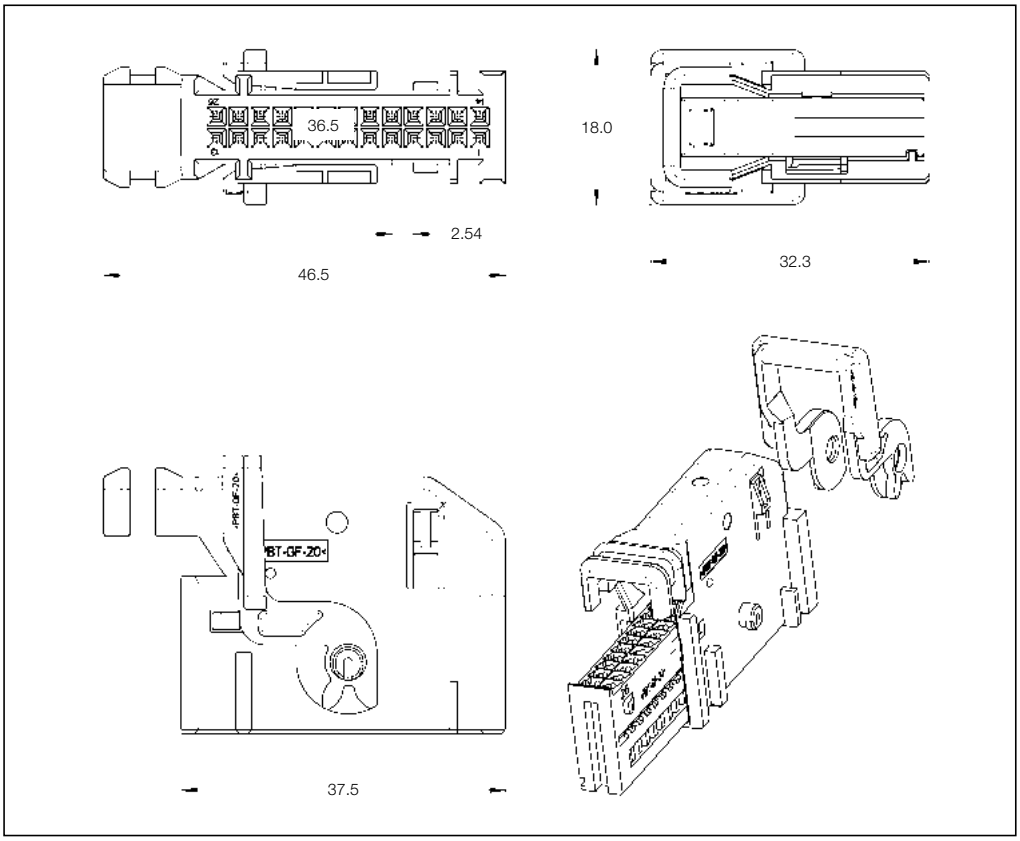

26 Position Receptacle Housings

No. of Pos.	Keying Options	Housing Color	Part Numbers						
			Receptacle Housing	Cover	Lever	Retainer Housing	Mating Pin Housing	Mating PCB Header Right-Angle	Mating PCB Header Vertical
26	–	Black	1801040-1	1801041-1	–	–	–	–	–

All specifications subject to change. Consult TE Connectivity for latest specifications.

Pin Housings

Technical Features

No. of Positions:
26 Positions

Housing Material:
PBT GF20

Wire Size Range:
0.35–0.50 mm^2

Product Specification:
108-15220

Application Specification:
411-15622

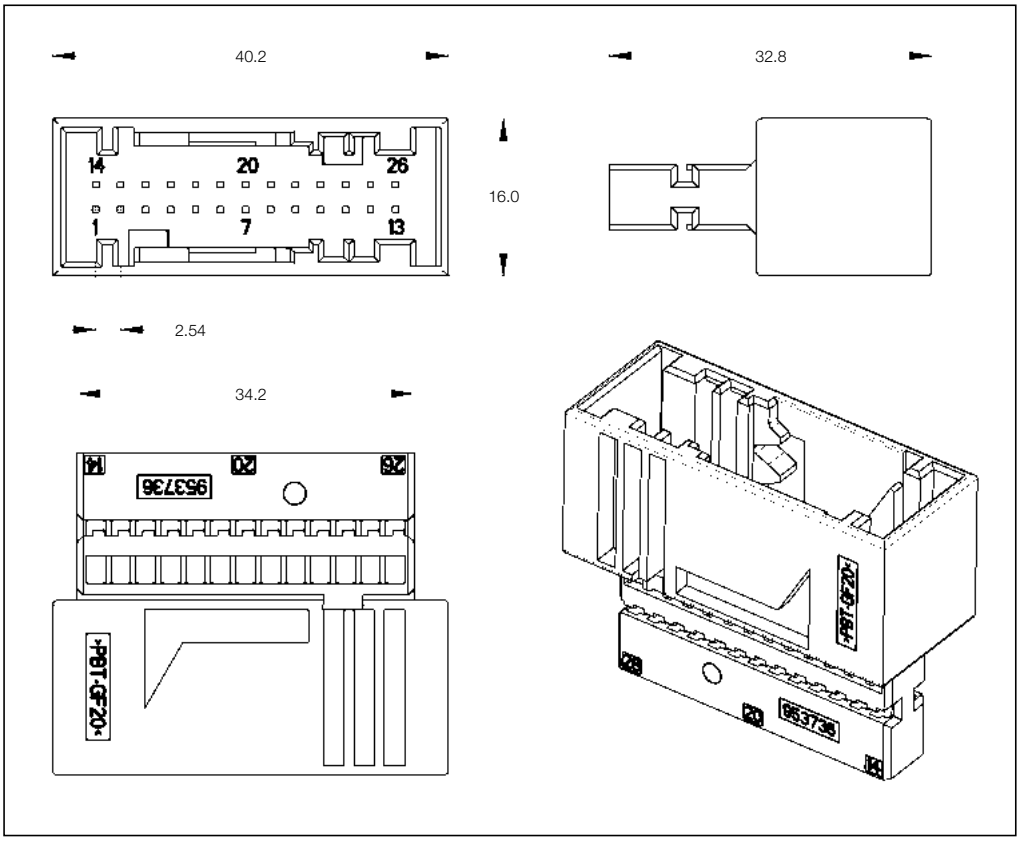

26 Position Pin Housings

No. of Pos.	Keying Options	Housing Color	Part Numbers					
			Pin Housing	Cover	Locking Device	Cover and Lever	Retainer Housing	Mating Counter Part
26	–	Black	–	–	–	–	–	144935-1
		Yellow	953736-1	–	–	–	–	–
		Blue	953736-2					
		Red	953736-3					
		Green	953736-4					
		Purple	953736-5					

Mating Receptacle Housing
See Page 5-6

Printed Circuit Board Headers

Technical Features

No. of Positions:
26 Positions

Housing Material:
PBT GF20

Material and Finish:
Tin, Gold over Nickel

Product Specification:
108-15106

Application Specification:
—

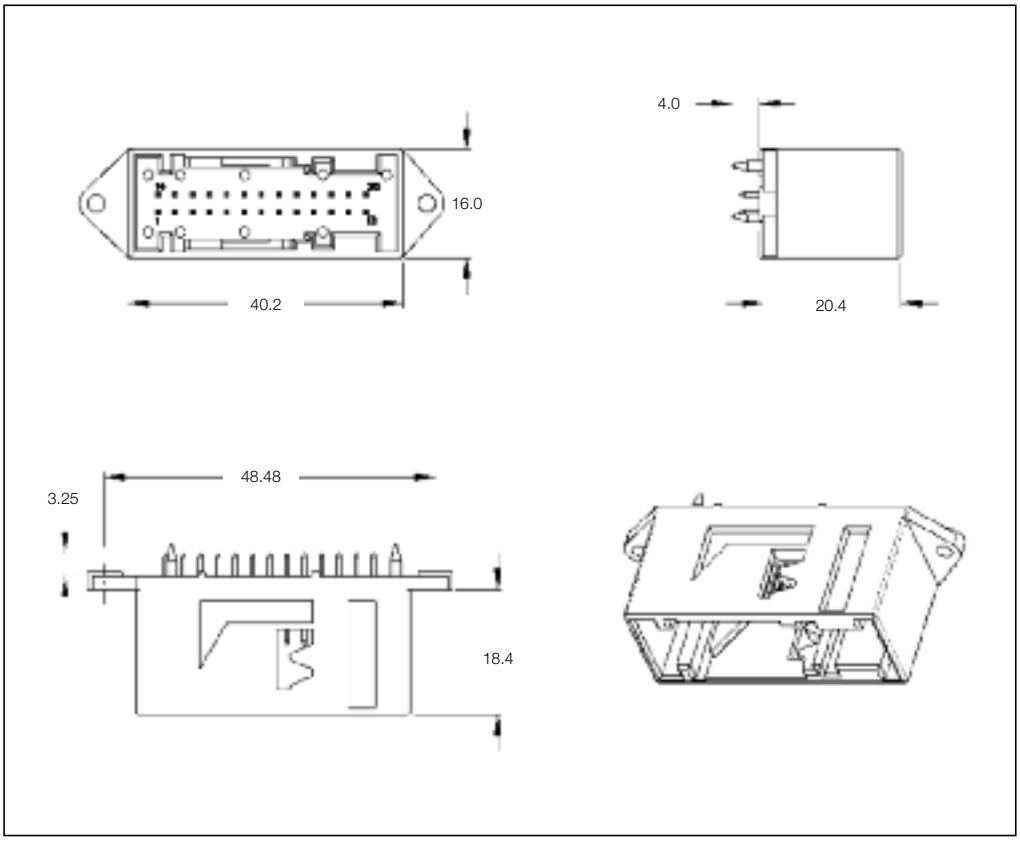

26 Position PCB Header

No. of Pos.	Keying Options*	Housing Color	Part Numbers					
			PCB Header Right-Angle	PCB Header Vertical	Cover	Cover and Lever	Retainer Housing	Mating Counter Part
26	A-E	Yellow	–	185226-1	–	–	–	144935-1 or 185875-1
	B-F	Blue	–	185226-2				
	A-E	Black	–	185226-3				
	B-F	White	–	185226-4				
	A-E	Black	–	1-185226-3				
	B-F	White	–	1-185226-4				

*) For details, see drawing.

Mating Receptacle Housing
See Page 5-6–5-7

All specifications subject to change. Consult TE Connectivity for latest specifications.

Printed Circuit Board Headers

Technical Features

No. of Positions:
26 Positions with Board Locks

Housing Material:
PBT GF20

Material and Finish:
CuSn6, post tin plated

Product Specification:
108-15181

Application Specification:
—

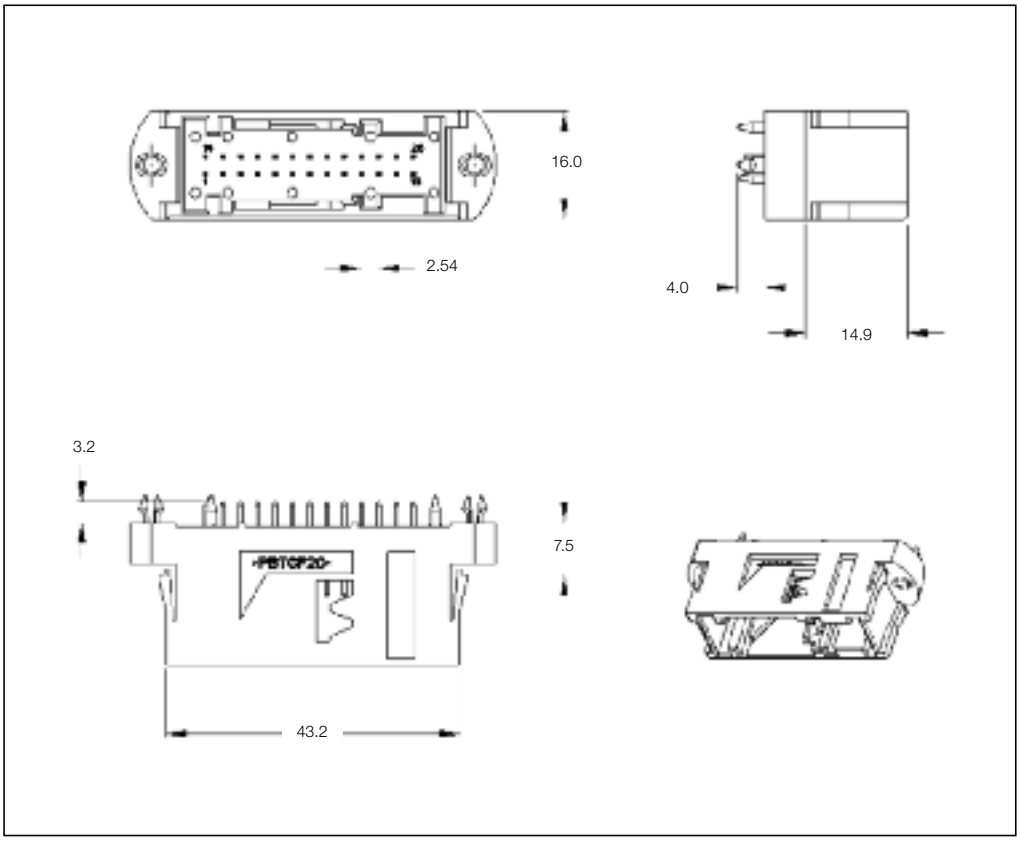

26 Position PCB Header

No. of Pos.	Keying Options	Housing Color	Part Numbers					
			PCB Header Right-Angle	PCB Header Vertical	Cover	Cover and Lever	Retainer Housing	Mating Counter Part
26	–	Yellow	–	953236-1	–	–	–	144935-1 or 185875-1
		Blue	–	953236-2				

Mating Receptacle Housing
See Page 5-6–5-7

Printed Circuit Board Headers

Technical Features

No. of Positions:
26 Positions

Housing Material:
PBT GF20

Material and Finish:
CuSn6, post tin plated

Product Specification:
108-15140

Application Specification:
—

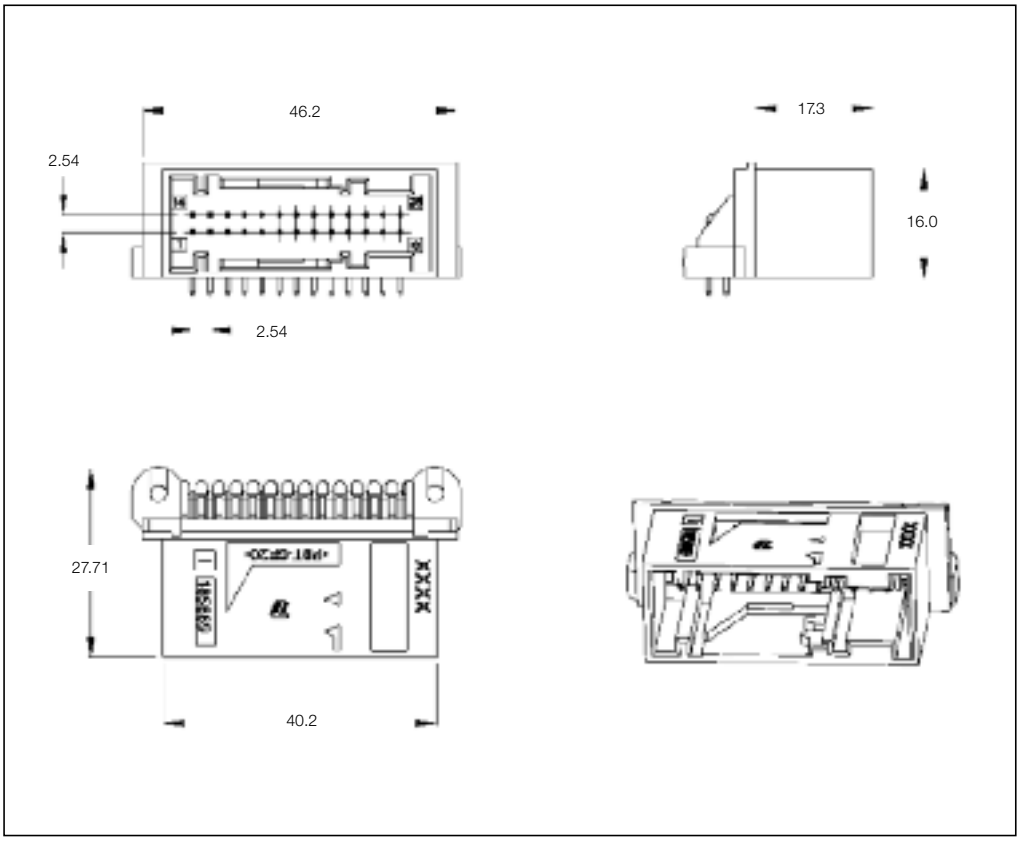

26 Position PCB Header

No. of Pos.	Keying Options	Housing Color	Part Numbers					
			PCB Header Right-Angle	PCB Header Vertical	Cover	Cover and Lever	Retainer Housing	Mating Counter Part
26	–	Yellow	185890-1	–	–	–	–	144935-1 or 185875-1
		Blue	185890-2	–				

Mating Receptacle Housing
See Page 5-6–5-7

All specifications subject to change. Consult TE Connectivity for latest specifications.

Printed Circuit Board Headers

Technical Features

No. of Positions:
26 Positions

Housing Material:
PCT GF30

Material and Finish:
CuSn6, post tin plated

Product Specification:
108-15215

Application Specification:
—

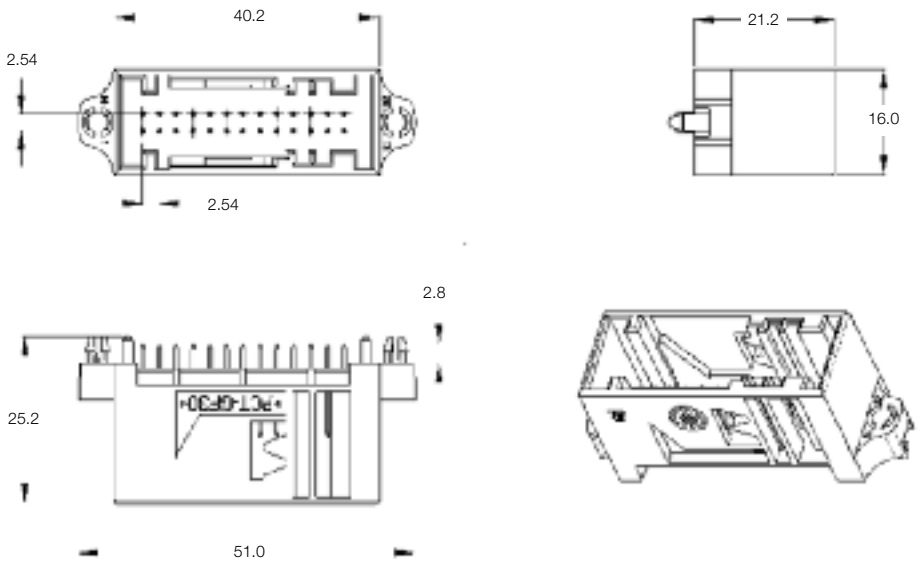

26 Position PCB Header

No. of Pos.	Keying Options	Housing Color	Part Numbers: PCB Header Right-Angle	Part Numbers: PCB Header Vertical	Part Numbers: Cover	Part Numbers: Cover and Lever	Part Numbers: Retainer Housing	Part Numbers: Mating Counter Part
18	–	Yellow (post no selective)	–	953472-1	–	–	–	144935-1 or 185875-1
		Yellow (post selective)	–	1-953472-1				
		Blue (post no selective)	–	953472-2				
		Blue (post selective)	–	1-953472-2				

Mating Receptacle Housing
See Page 5-6–5-7

Printed Circuit Board Headers

Technical Features

No. of Positions:
26 Positions with Board Locks

Housing Material:
PBT GF20

Material and Finish:
CuSn6, post tin plated

Product Specification:
108-15140

Application Specification:
—

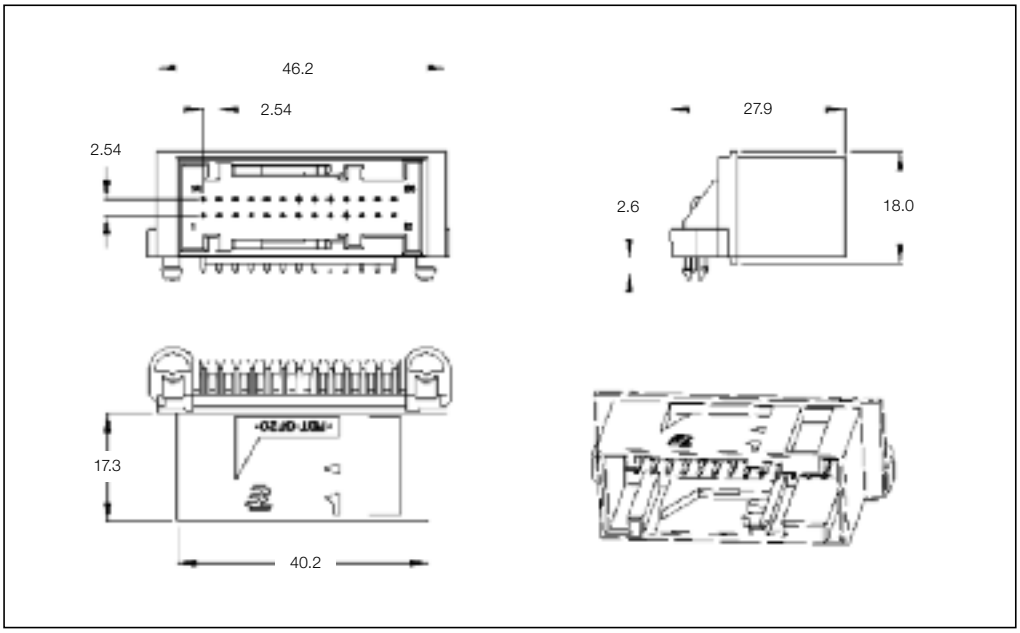

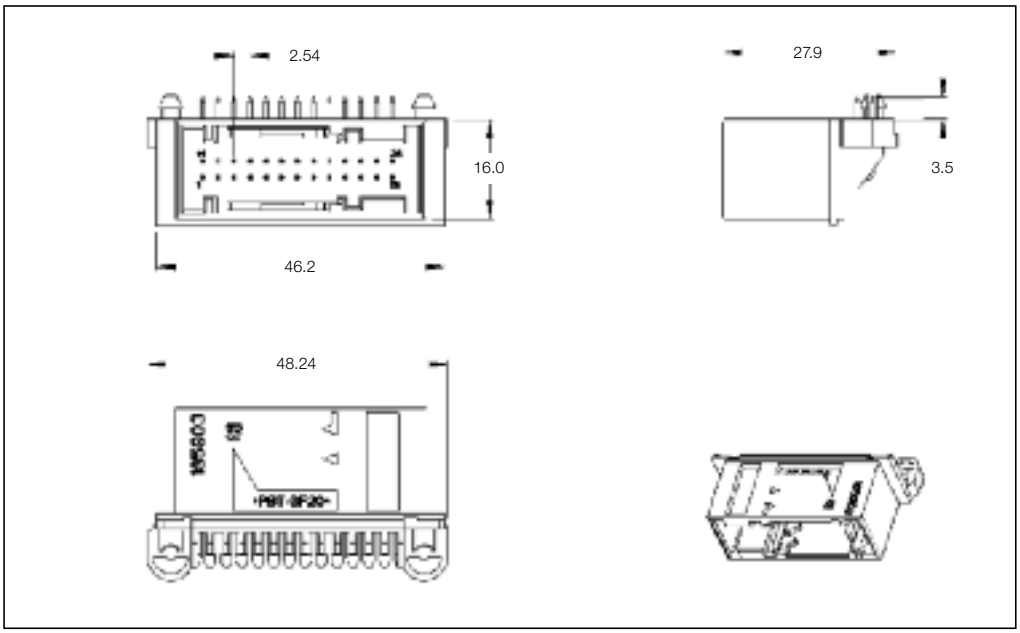

Mating Receptacle Housing
See Page 5-6–5-7

26 Position PCB Header

No. of Pos.	Keying Options	Housing Color	Part Numbers: PCB Header Right-Angle	Part Numbers: PCB Header Vertical	Part Numbers: Cover	Part Numbers: Cover and Lever	Part Numbers: Retainer Housing	Part Numbers: Mating Receptacle Housing
26	–	Yellow	185534-1	–	–	–	–	144935-1 or 185875-1
		Blue	185534-2	–				
	with long pin	Yellow	185534-3	–				
		Blue	185534-4	–				
	reverse version	Yellow	185904-1	–				
		Blue	185904-2	–				
	–	Black	185904-3	–				
		Blue	1-185904-2	–				

All specifications subject to change. Consult TE Connectivity for latest specifications.

Printed Circuit Board Headers

Technical Features

No. of Positions:
26 Positions

Housing Material:
PBT GF20

Material and Finish:
CuSn, tinned

Product Specification:
—

Application Specification:
—

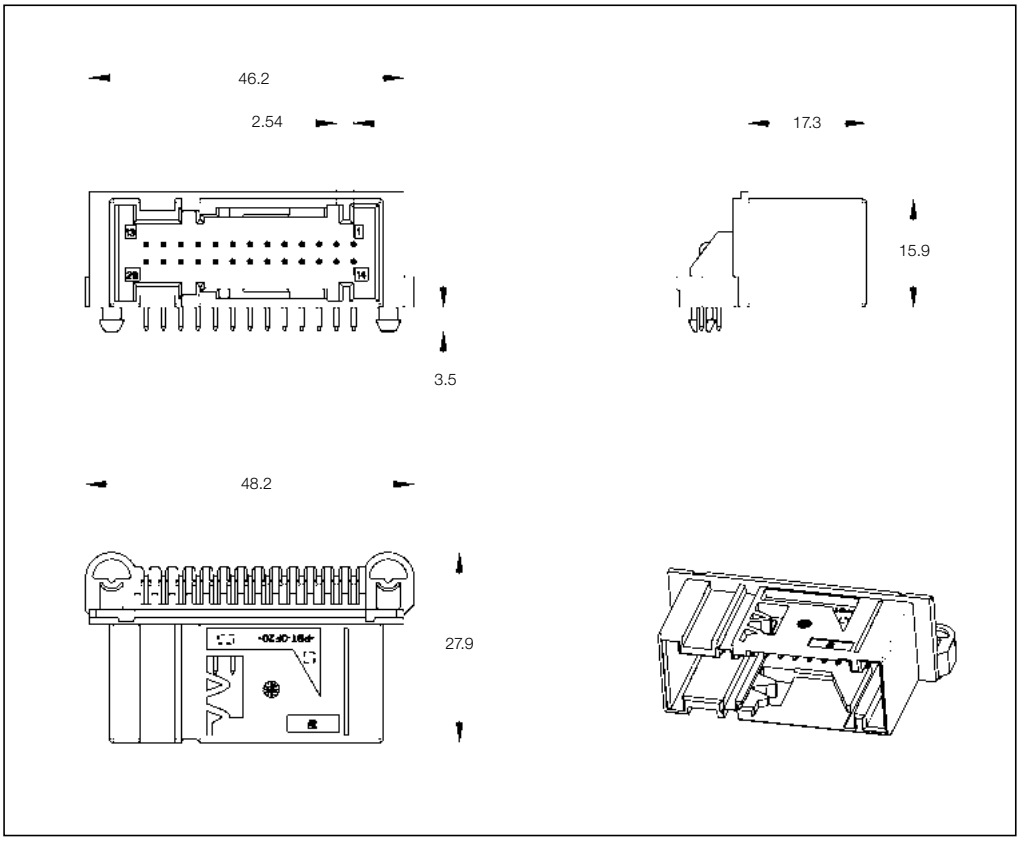

26 Position PCB Header

No. of Pos.	Keying Options	Housing Color	Part Numbers					
			PCB Header Right-Angle	PCB Header Vertical	Cover	Lever	Retainer Housing	Mating Receptacle Housing
26	AE	Black	1456736-1	–	–	–	–	–
	BF	Black	1456736-2	–				
	BF	Blue	1456736-3	–				

Printed Circuit Board Headers

Technical Features

No. of Positions:
28 Positions

Housing Material:
PBT GF20

Material and Finish:
CuSn, tinned

Product Specification:
108-15167

Application Specification:
—

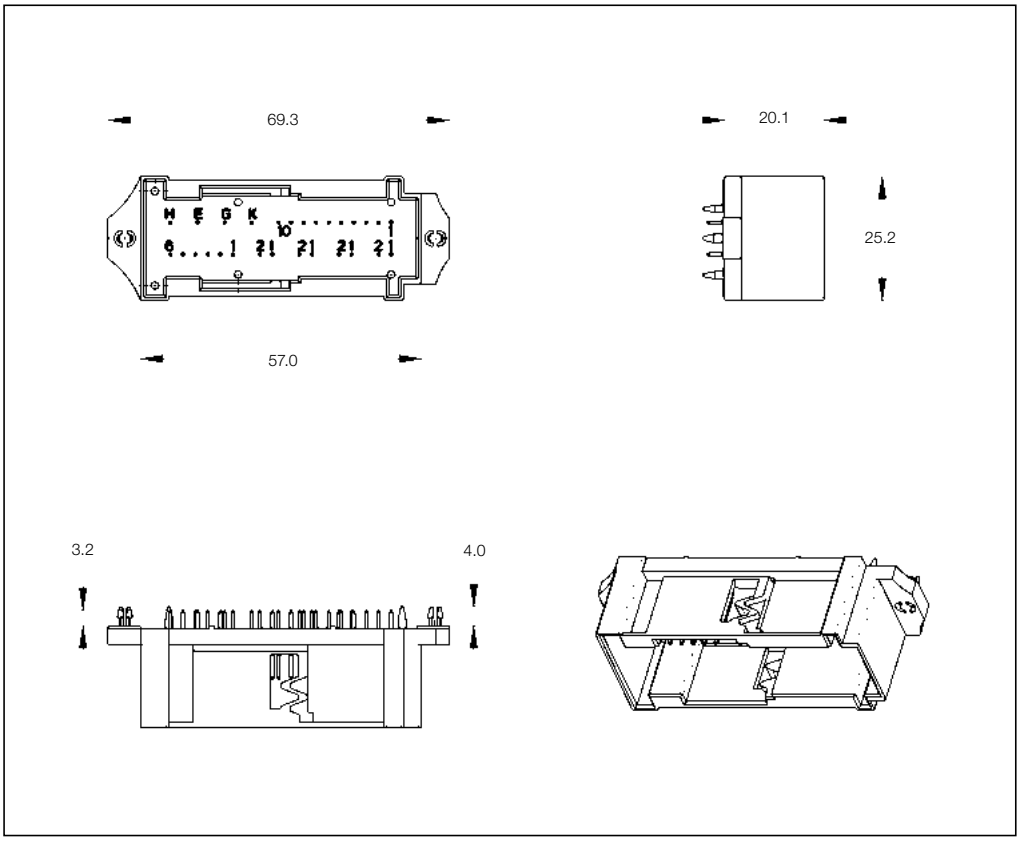

28 Position PCB Header

No. of Pos.	Keying Options	Housing Color	Part Numbers					
			PCB Header Right-Angle	PCB Header Vertical	Cover	Lever	Retainer Housing	Mating Receptacle Housing
28	–	Black	–	953002-1	–	–	–	–

All specifications subject to change. Consult TE Connectivity for latest specifications.

Printed Circuit Board Headers

Technical Features

No. of Positions:
30 Positions

Housing Material:
PET GF30

Material and Finish:
CuFe, tin plated

Product Specification:
108-18030

Application Specification:
114-18021

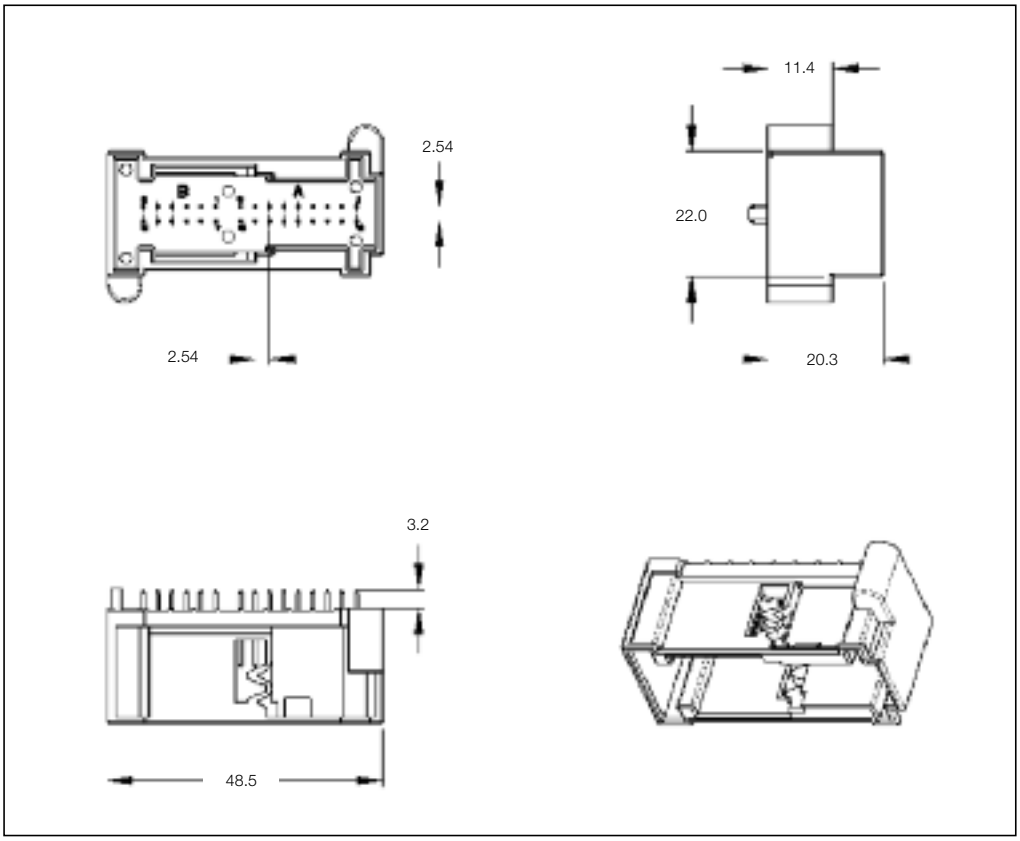

30 Position PCB Header

No. of Pos.	Keying Options	Housing Color	Part Numbers					
			PCB Header Right-Angle	PCB Header Vertical	Cover	Cover and Lever	Retainer Housing	Mating Receptacle Housing
30	–	–	–	967267-1	–	–	–	–

5

Technical Features

Application:
Airbag

No. of Positions:
30 Position Assembly

Housing Material:
PBT GF30

Material and Finish:
Mating Area Au
CuSn, tin plated

Product Specification:
108-61007

Application Specification:
114-18021

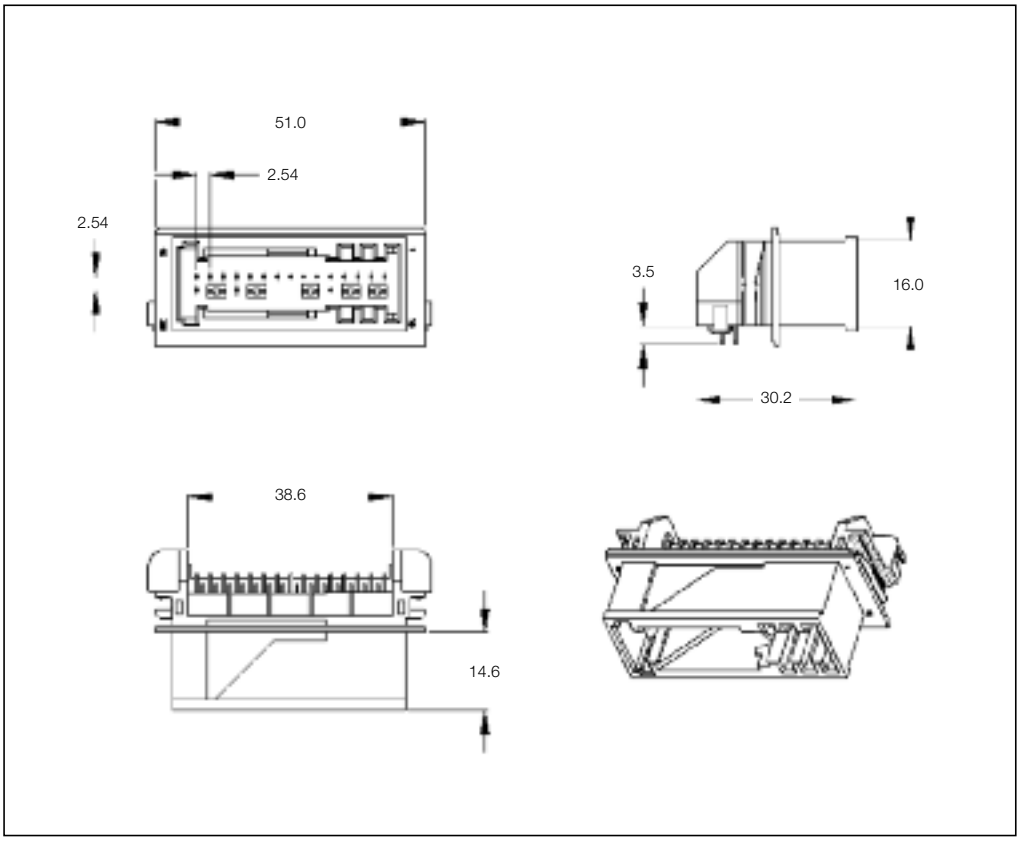

30 Position PCB Header

No. of Pos.	Keying Options	Housing Color	Part Numbers					
			PCB Header Right-Angle	PCB Header Vertical	Cover	Cover and Lever	Retainer Housing	Mating Receptacle Housing
30	See Drawing	See Drawing	85188-1/-9	–	–	–	–	85189-1
			1-85188-1/-2	–				
			1-85188-5/-9	–				
			2-85188-1/-9	–				

All specifications subject to change. Consult TE Connectivity for latest specifications.

Receptacle Housings

Technical Features

No. of Positions:
32 Positions

Housing Material:
PBT GF20

Wire Size Range:
0.20–0.75 mm^2

Product Specification:
108-18548-0

Application Specification:
114-18714-0

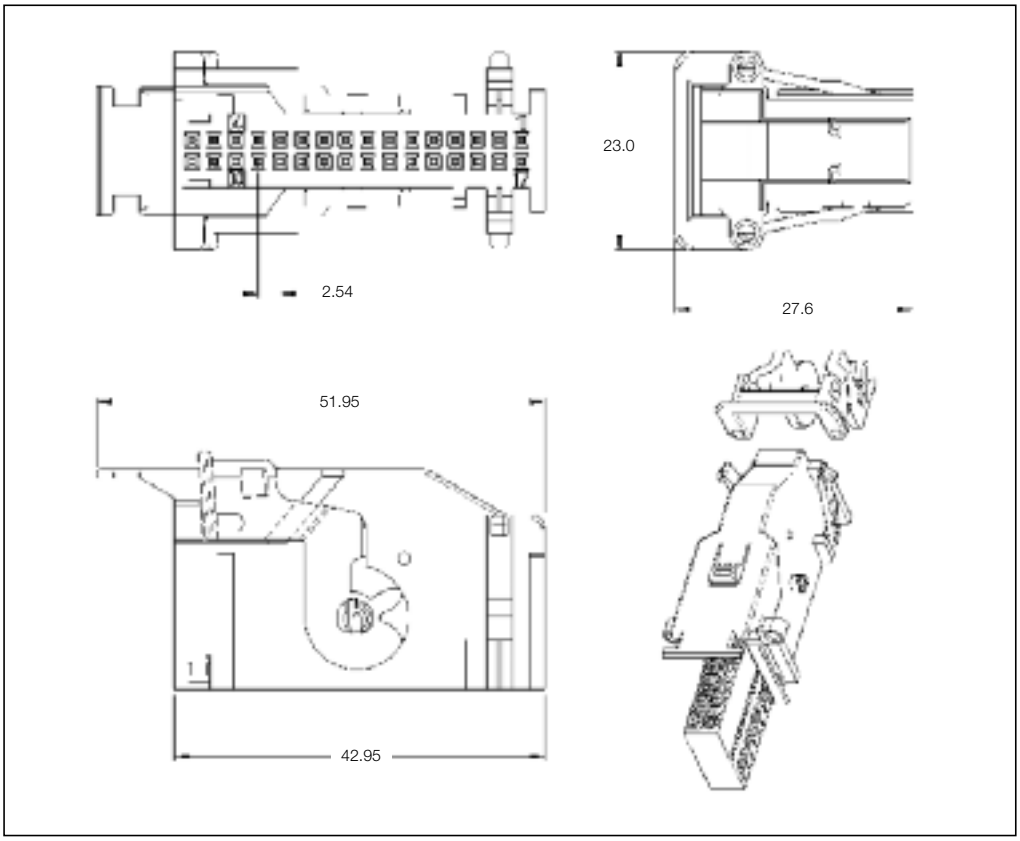

32 Position Receptacle Housings

No. of Pos.	Keying Options	Housing Color	Part Numbers							
			Receptacle Housing	Cover	Locking Device	Cover and Lever	Retainer Housing	Mating Pin Housing	Mating PCB Header Right-Angle	Mating PCB Header Vertical
32	–	Black	968265-1	–	–	–	–	–	–	1-967598-5
		Gray	–	–	–	929053-1	–	–	–	–
		Blue	–	–	–	929053-2				

Mating Header
See Page 5-27

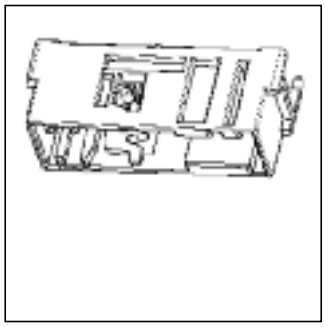

Receptacle Housings

Technical Features

No. of Positions:
32 Positions

Housing Material:
PBT GF20

Wire Size Range:
0.14–0.75 mm^2

Product Specification:
108-18924

Application Specification:
114-18630

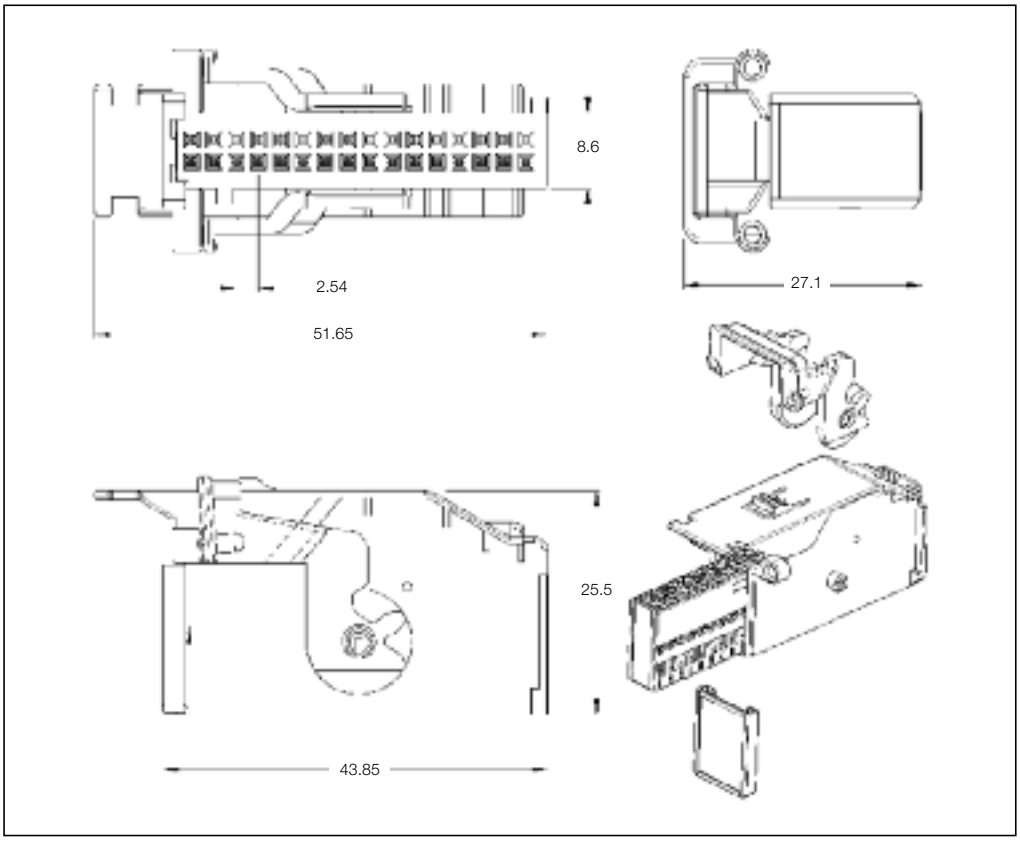

32 Position Receptacle Housings

No. of Pos.	Keying Options	Housing Color	Part Numbers							
			Receptacle Housing	Cover	Locking Device	Cover and Lever	Retainer Housing	Mating Pin Housing	Mating PCB Header Right-Angle	Mating PCB Header Vertical
32	A, F	Green	1420000-1	–	1420001-1	1534222-1	–	–	–	966658-1
	C, D	Blue	1420000-1	–	1420001-1	1534222-2	–	–	–	966658-2

Mating Header
See Page 5-28

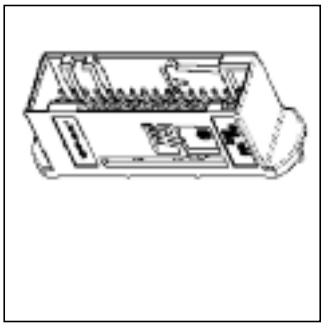

All specifications subject to change. Consult TE Connectivity for latest specifications.

Receptacle Housings

Technical Features

Application:
Airbag

No. of Positions:
32 Position Assembly

Housing Material:
PA66 GF13

Wire Size Range:
0.35–0.5 mm^2

Product Specification:
108-20223

Application Specification:
411-20054

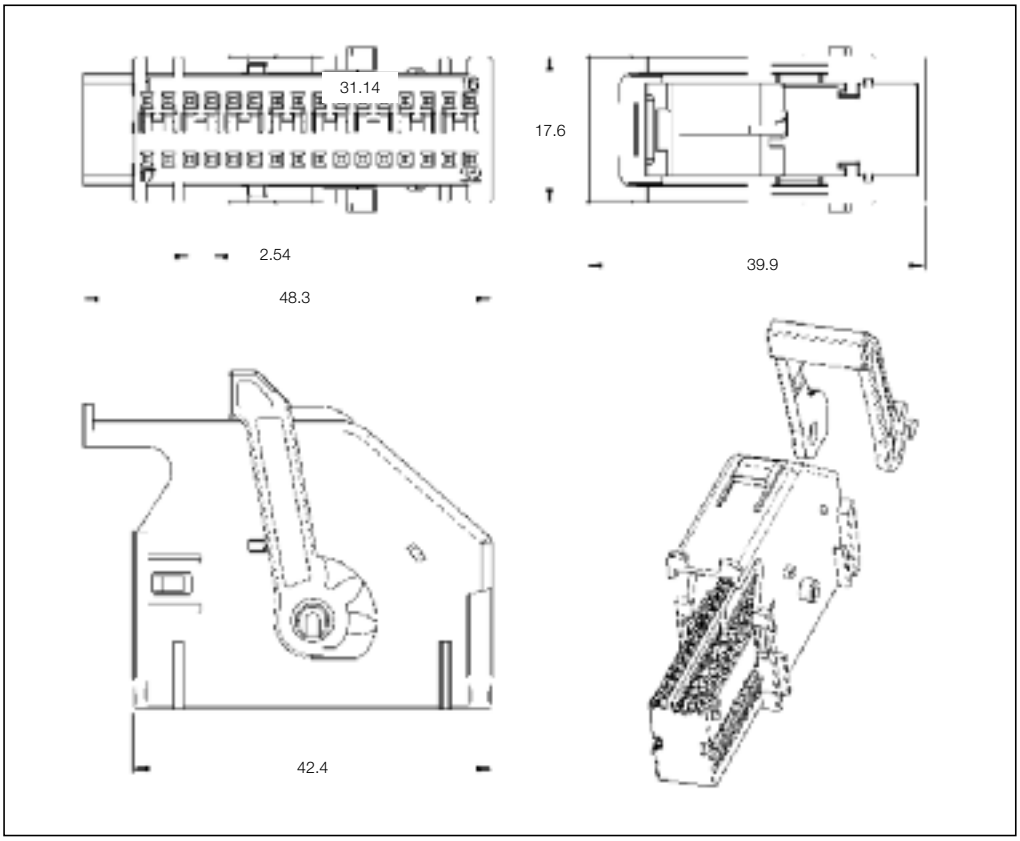

32 Position Receptacle Housings

No. of Pos.	Keying Options	Housing Color	Part Numbers							
			Receptacle Housing	Cover	Locking Device	Cover and Lever	Retainer Housing	Mating Pin Housing	Mating PCB Header Right-Angle	Mating PCB Header Vertical
32	B	Gray	284423-3	–	–	–	–	–	–	–
	A	Black	284423-4	–	–	–	–	–	1379046-1	–
	C	Brown	284423-5	–	–	–	–	–	–	–
	D	Blue	284423-6							
	AD-Ab	White	284423-7							

Receptacle Housings

Technical Features

Application:
Airbag

No. of Positions:
32 Positions

Housing Material:
PA66 GF13

Wire Size Range:
0.20–0.75 mm^2

Product Specification:
108-20223

Application Specification:
114-15077

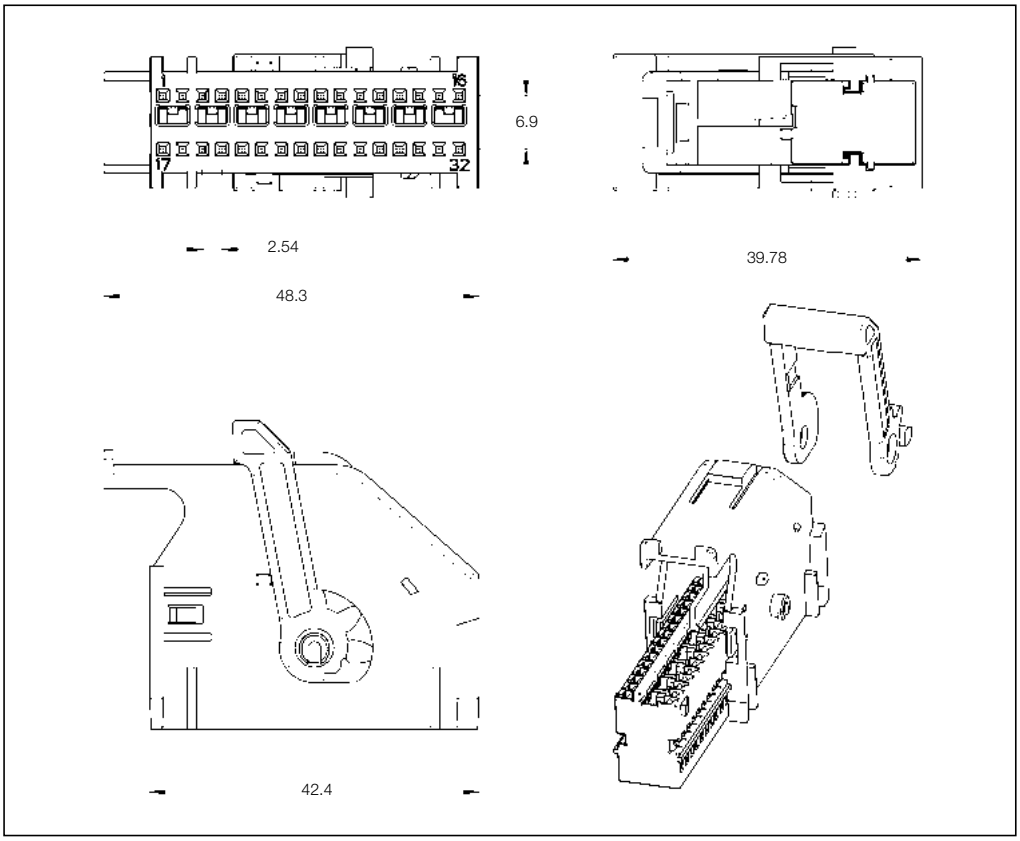

32 Position Receptacle Housings

No. of Pos.	Keying Options	Housing Color	Part Numbers						
			Receptacle Housing	Cover	Lever	Retainer Housing	Mating Pin Housing	Mating PCB Header Right-Angle	Mating PCB Header Vertical
32	–	Gray	284999-3	–	–	–	–	–	–
		Black	284999-4						
		Brown	284999-5						
		Blue	284999-6						
		White	284999-7						

All specifications subject to change. Consult TE Connectivity for latest specifications.

Receptacle Housings

Technical Features

Application:
Airbag

No. of Positions:
32 Positions
(of which 8 Shunts)

Housing Material:
PA66 GF

Wire Size Range:
0.35–0.75 mm^2

Product Specification:
108-20223

Application Specification:
411-15659

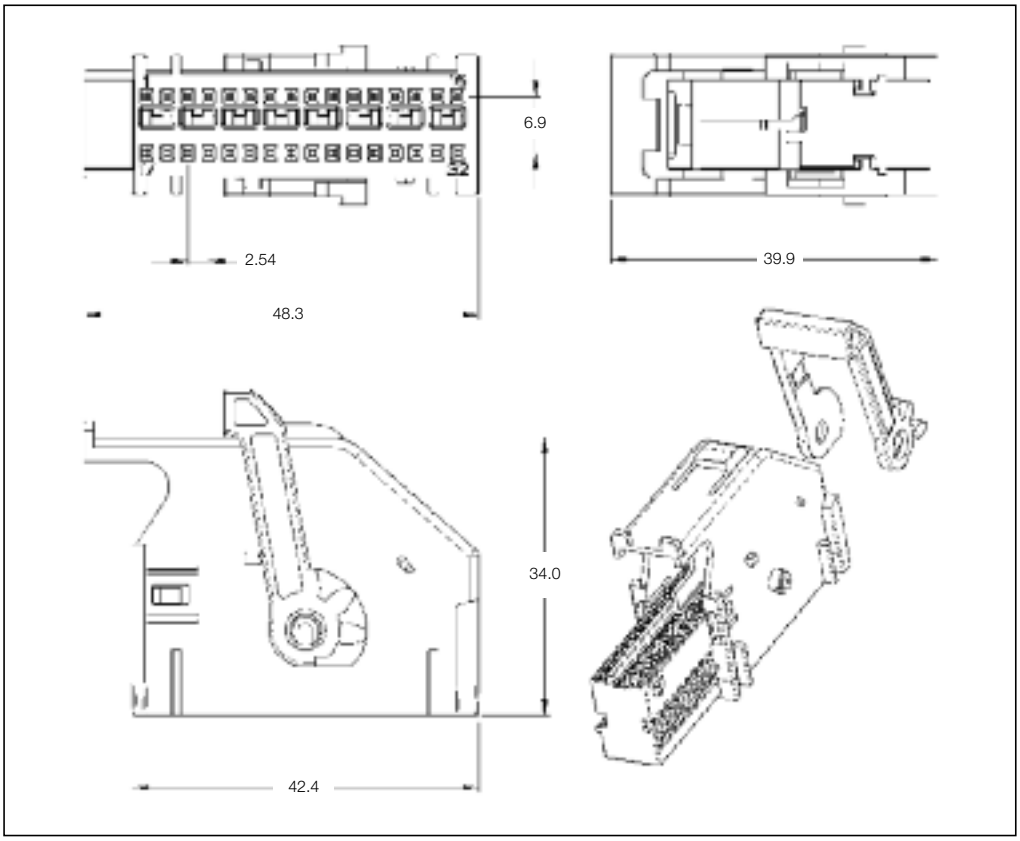

32 Position Receptacle Housings

No. of Pos.	Keying Options	Housing Color	Part Numbers							
			Receptacle Housing	Cover	Locking Device	Cover and Lever	Retainer Housing	Mating Pin Housing	Mating PCB Header Right-Angle	Mating PCB Header Vertical
32	–	Black	284422-1	284715-1	–	–	–	–	–	–

Receptacle Housings

Technical Features

No. of Positions:
32 Positions

Housing Material:
PBT GF15

Wire Size Range:
0.20–0.75 mm^2

Product Specification:
108-18689

Application Specification:
114-18332

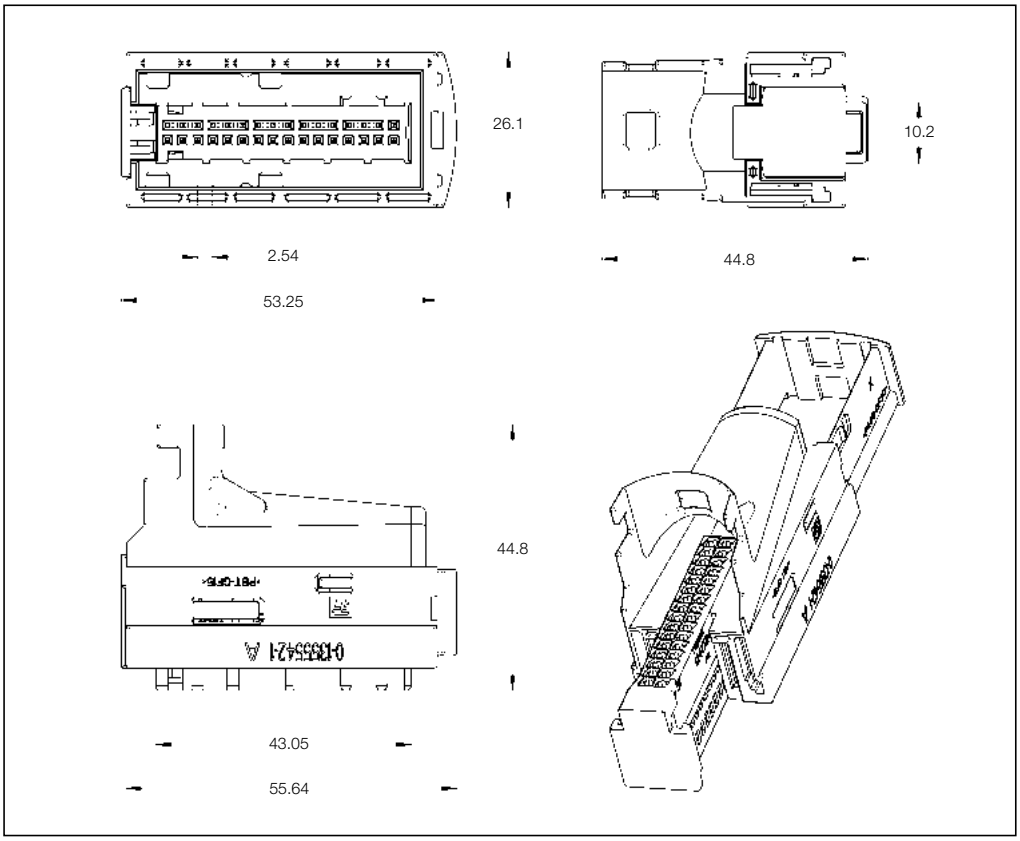

32 Position Receptacle Housings

No. of Pos.	Keying Options	Housing Color	Part Numbers						
			Receptacle Housing	Cover	Lever	Retainer Housing	Mating Pin Housing	Mating PCB Header Right-Angle	Mating PCB Header Vertical
32	–	Black	1241724-1	1355541-1	–	–	–	–	–
		Blue	1241724-2	1355541-2					

All specifications subject to change. Consult TE Connectivity for latest specifications.

Printed Circuit Board Headers

Technical Features

No. of Positions:
32 Positions

Housing Material:
PA66

Material and Finish:
CuSn, pre-tin plated

Product Specification:
108-18547-0

Application Specification:
114-18174-0

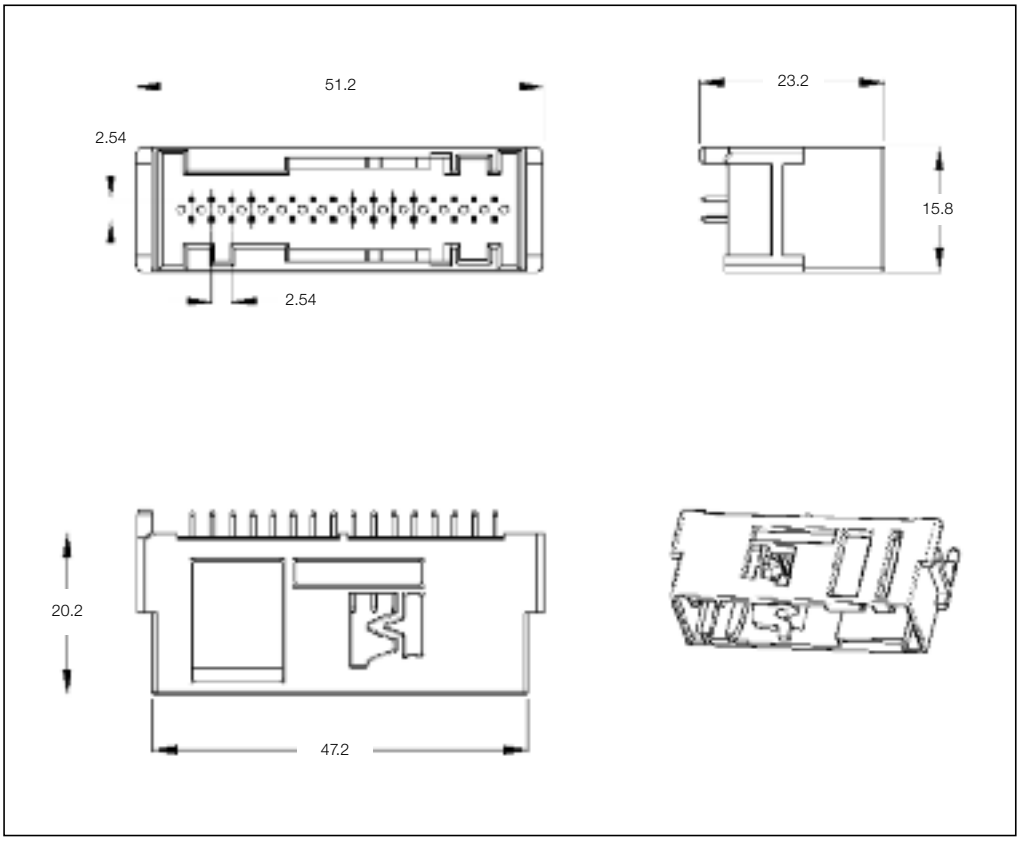

32 Position PCB Header

No. of Pos.	Keying Options	Housing Color	Part Numbers					
			PCB Header Right-Angle	PCB Header Vertical	Cover	Cover and Lever	Retainer Housing	Mating Receptacle Housing
32	A	Gray	–	967598-1	–	–	–	968265-1
	B	Blue	–	967598-4	–	–	–	–
	A	Gray	–	1-967598-1				
	B	Blue	–	1-967598-4				
	C	Black	–	1-967598-5				

Mating Receptacle Housing
See Page 5-21

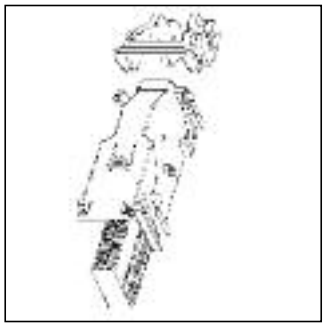

Printed Circuit Board Headers

Technical Features

No. of Positions:
32 Position Assembly (2 × 16)

Housing Material:
PBT GF15

Material and Finish:
CuSn, tin plated

Product Specification:
108-18692-0

Application Specification:
—

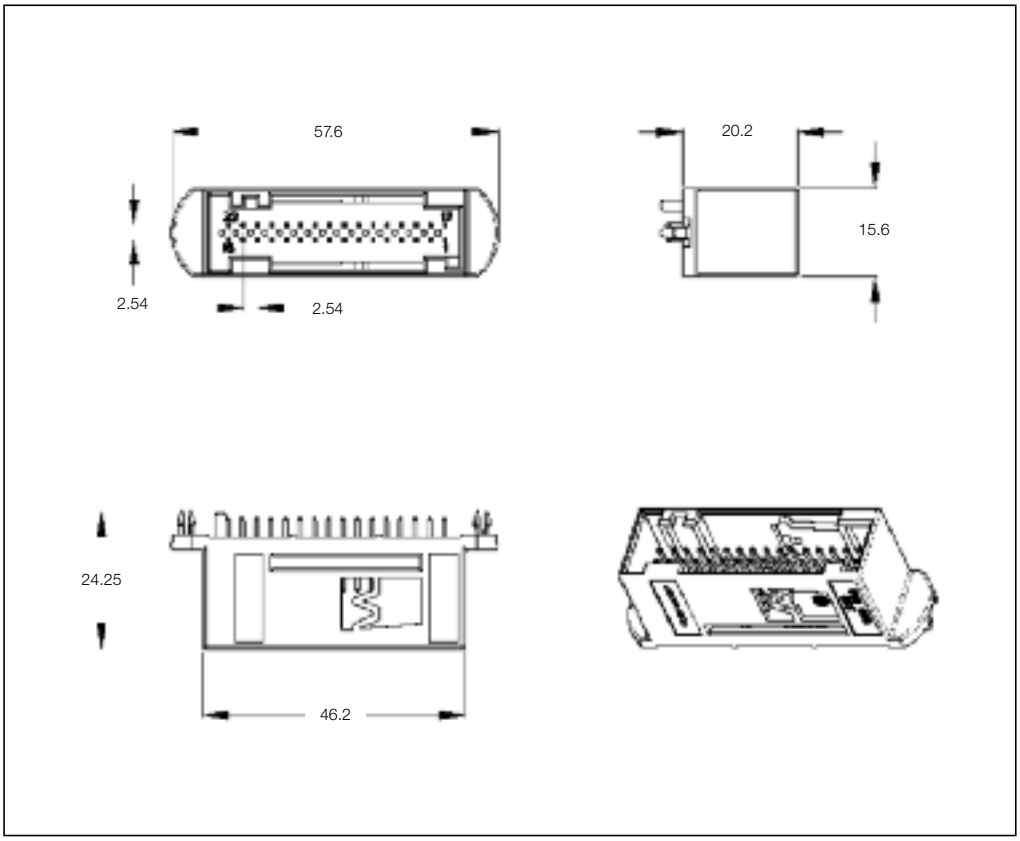

32 Position PCB Header

No. of Pos.	Keying Options	Housing Color	Part Numbers					
			PCB Header Right-Angle	PCB Header Vertical	Cover	Cover and Lever	Retainer Housing	Mating Receptacle Housing
32	A-F	Green	–	966658-1	–	–	–	1420000-1 1420001-1 & 1534222-1
	C-D	Blue	–	966658-2	–	–	–	1420000-1 1420001-1 & 1534222-2

Mating Receptacle Housing
See Page 5-25

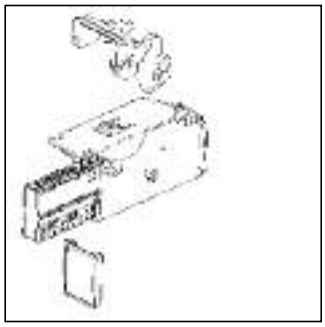

All specifications subject to change. Consult TE Connectivity for latest specifications.

Printed Circuit Board Headers

Technical Features

No. of Positions:
32 Positions

Housing Material:
PBT GF20/30

Material and Finish:
See customer drawing

Product Specification:
108-18214

Application Specification:
—

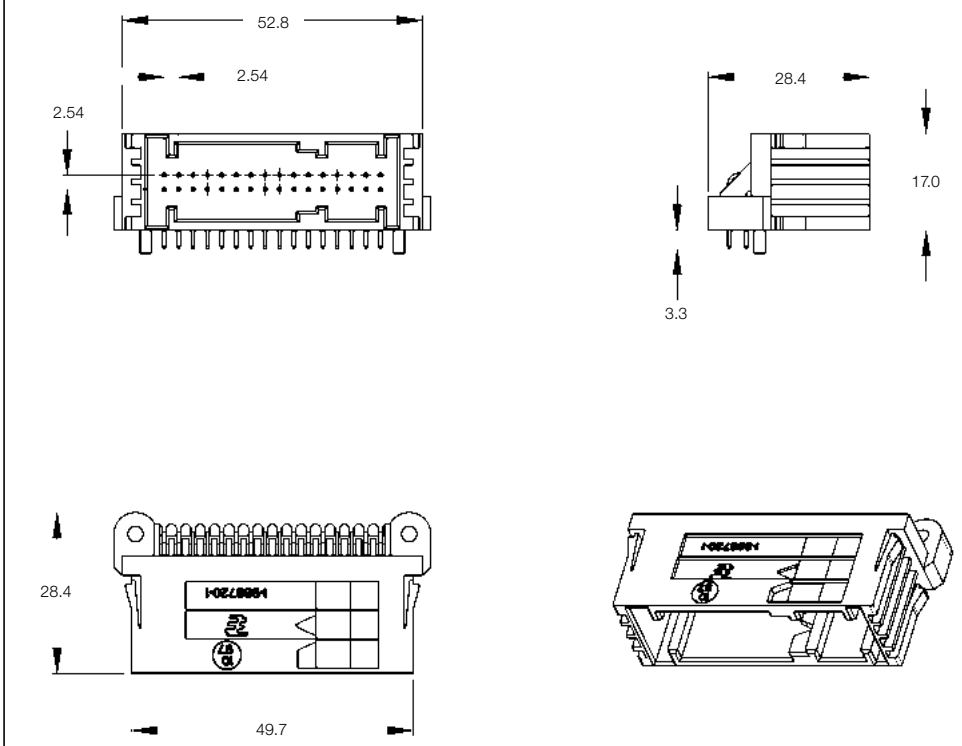

32 Position PCB Header

No. of Pos.	Keying Options	Housing Color	Part Numbers					
			PCB Header Right-Angle	PCB Header Vertical	Cover	Lever	Retainer Housing	Mating Receptacle Housing
32	–	Black	1-968720-1	–	–	–	–	–
		Black	1-968720-2	–				
		Black	1-968720-3	–				
		Natural	2-968720-2	–				
		Water Blue	9-968720-1	–				

Printed Circuit Board Headers

Technical Features

No. of Positions:
32 Positions for MODU II

Housing Material:
PBT GF30

Material and Finish:
CuSn6, pre tinned

Product Specification:
108-18547-0

Application Specification:
114-18174-0

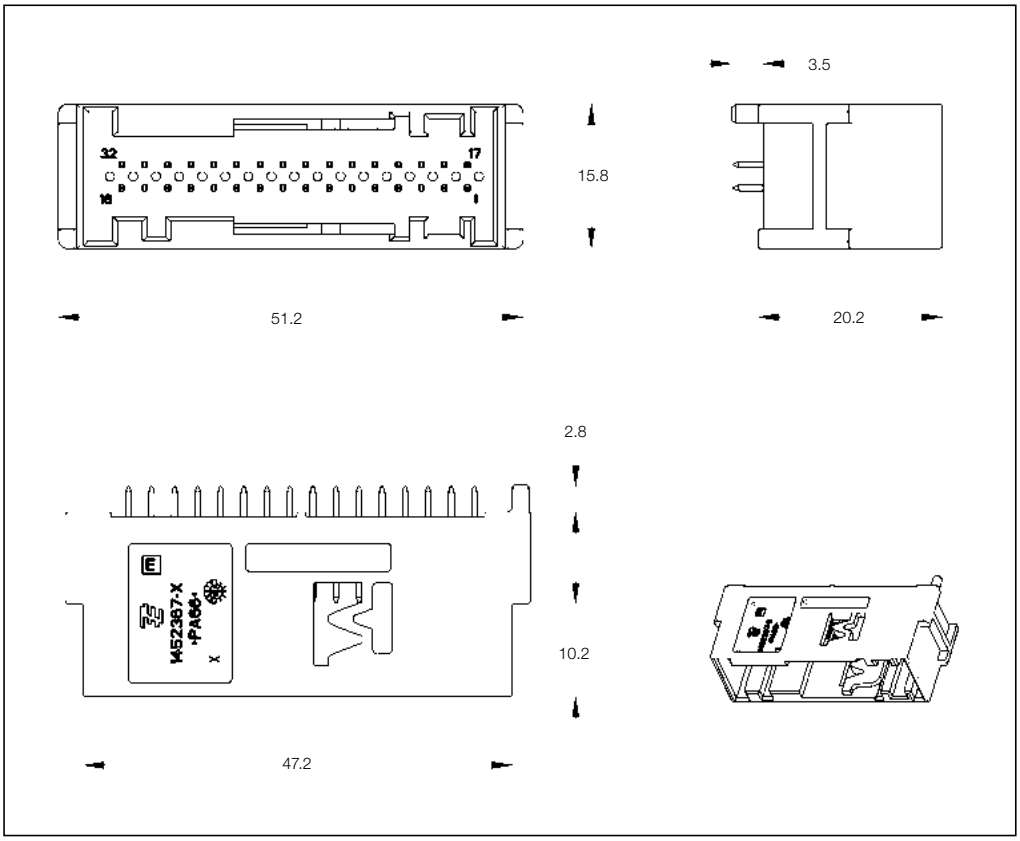

32 Position PCB Header

No. of Pos.	Keying Options	Housing Color	Part Numbers					
			PCB Header Right-Angle	PCB Header Vertical	Cover	Lever	Retainer Housing	Mating Receptacle Housing
32	A	Gray	–	1452368-1	–	–	–	–
	A	Gray	–	1-1452368-1				
	B	Blue	–	1-1452368-4				

All specifications subject to change. Consult TE Connectivity for latest specifications.

Printed Circuit Board Headers

Technical Features

No. of Positions:
32 Positions

Housing Material:
PBT GF20

Material and Finish:
CuFe2, pre tinned

Product Specification:
108-18214

Application Specification:
—

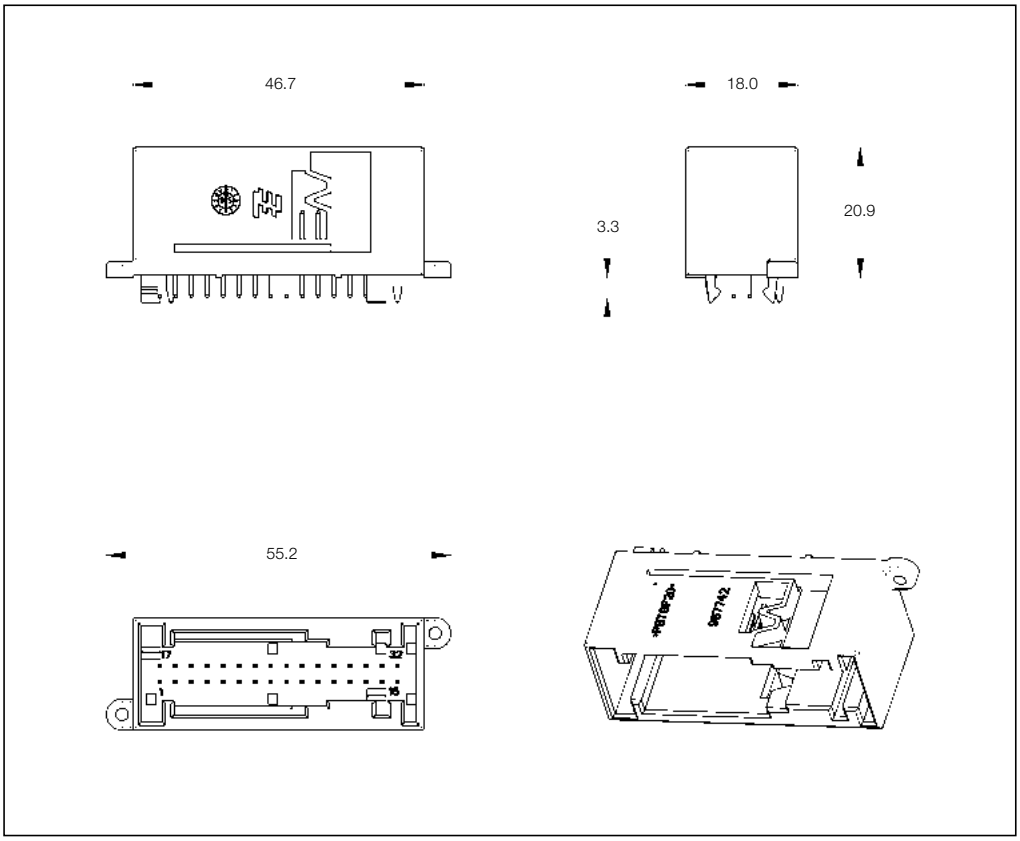

32 Position PCB Header

No. of Pos.	Keying Options	Housing Color	Part Numbers					
			PCB Header Right-Angle	PCB Header Vertical	Cover	Lever	Retainer Housing	Mating Receptacle Housing
32	–	Black	–	1-967742-1	–	–	–	–

Printed Circuit Board Headers

Technical Features

No. of Positions:
32 Position Header with Ears

Housing Material:
PBT GF20

Material and Finish:
CuSn6, post tin

Product Specification:
108-15211

Application Specification:
—

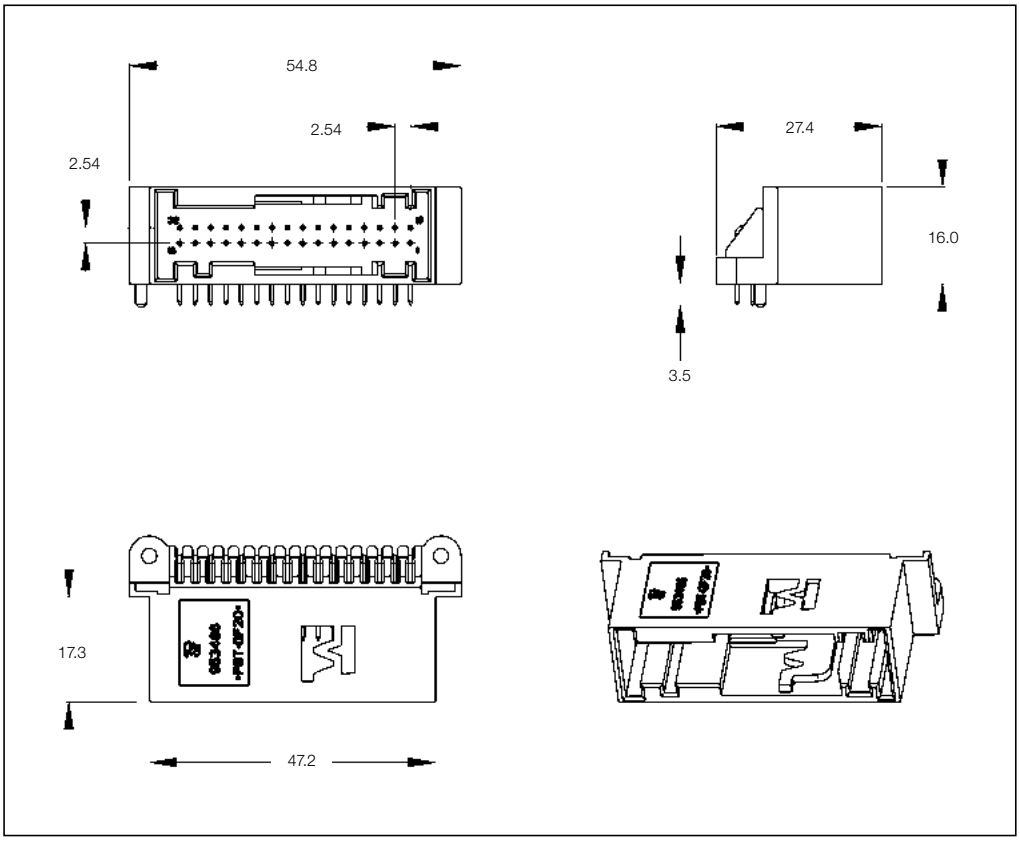

32 Position PCB Header

No. of Pos.	Keying Options	Housing Color	Part Numbers					
			PCB Header Right-Angle	PCB Header Vertical	Cover	Lever	Retainer Housing	Mating Receptacle Housing
32	B	Gray	953486-1	–	–	–	–	–
		Blue	953486-2	–				

All specifications subject to change. Consult TE Connectivity for latest specifications.

Receptacle Housings

Technical Features

No. of Positions:
34 Positions + 8 Shorting Bars

Housing Material:
PBT GF20

Wire Size Range:
0.35–0.75 mm^2

Product Specification:
108-15188

Application Specification:
411-15601

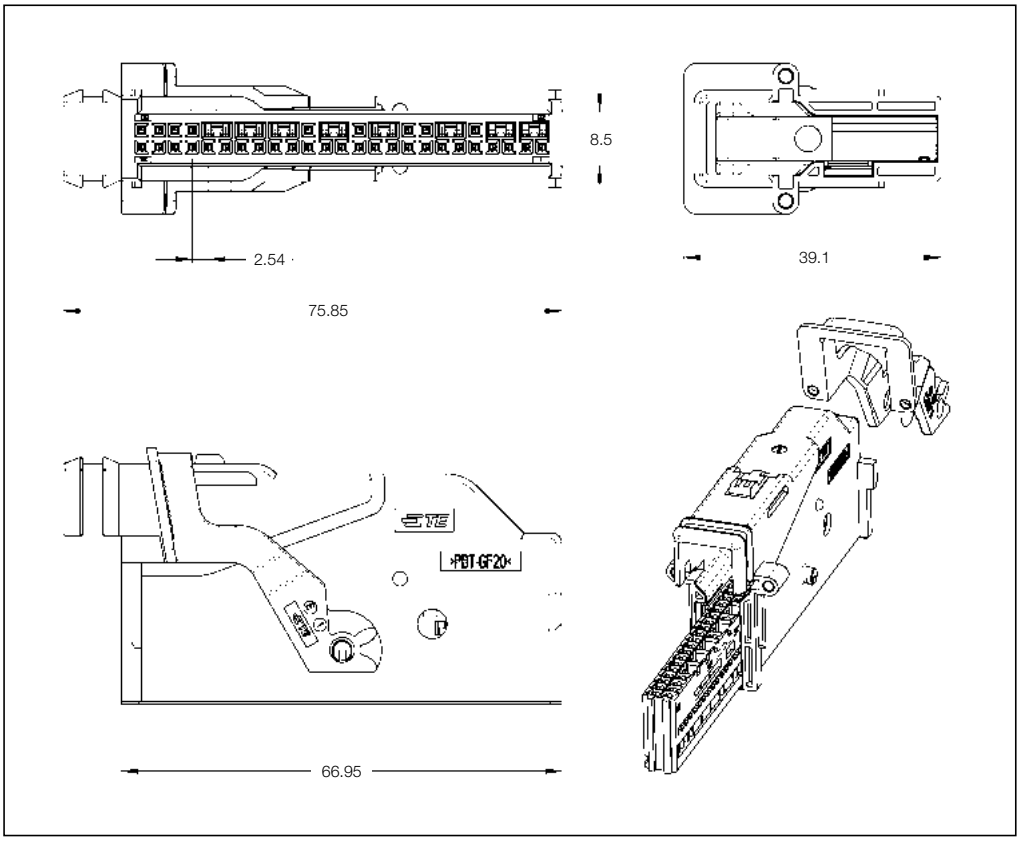

34 Position Receptacle Housings

No. of Pos.	Keying Options	Housing Color	Part Numbers							
			Receptacle Housing	Cover	Locking Device	Cover and Lever	Retainer Housing	Mating Pin Housing	Mating PCB Header Right-Angle	Mating PCB Header Vertical
34	–	Black	953222-1	–	–	–	–	–	–	–
		Orange	–	–	–	953221-1				

Receptacle Housings

Technical Features

No. of Positions:
36 Positions (9 + 18 + 9)

Housing Material:
PA66 GF

Wire Size Range:
0.35 – 0.75 mm^2

Product Specification:
108-20182

Application Specification:
411-20056

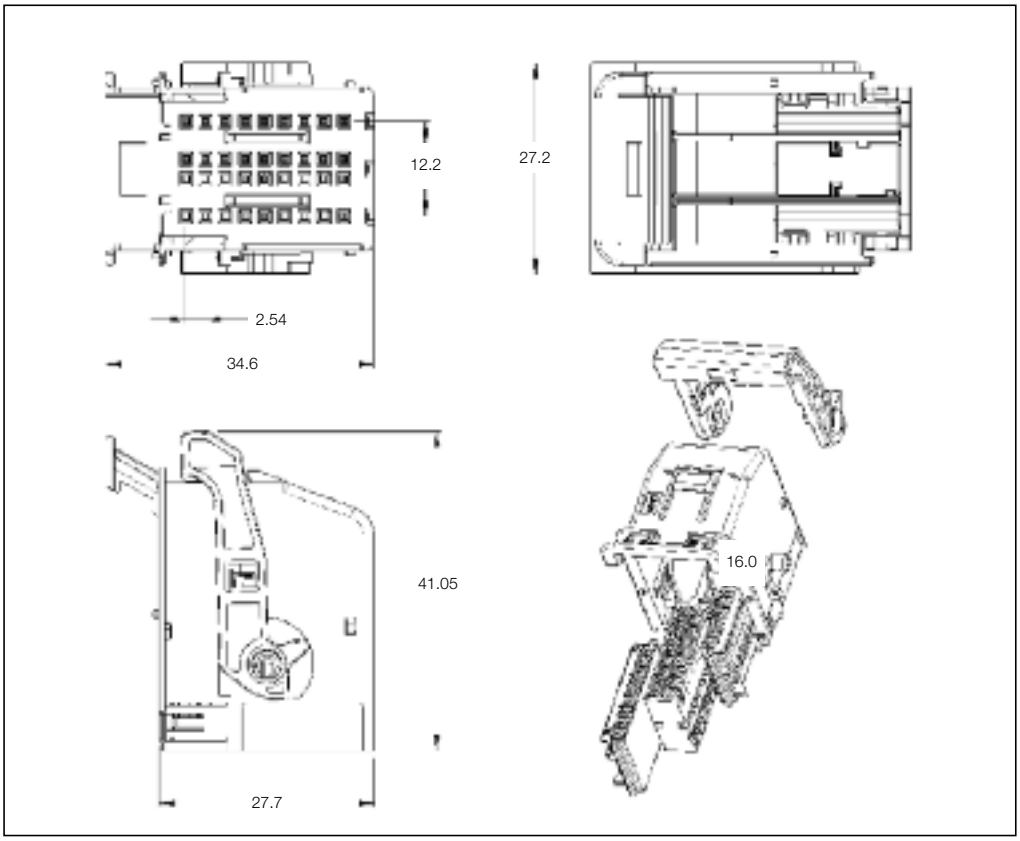

36 Position Receptacle Housings

No. of Pos.	Keying Options	Housing Color	Part Numbers							
			Receptacle Housing	Cover	Locking Device	Cover and Lever	Retainer Housing	Mating Pin Housing	Mating PCB Header Right-Angle	Mating PCB Header Vertical
36	–	Blue (Frame)	–	–	–	284438-1	–	–	284520-1	284317-1 284317-2
		Green	284134-5	–	–	–				
		White	284134-6 (9 Pos.)	–	–	–				
		Black	953599-1 (18 Pos.)	–	–	–				

Mating Header
See Page 5-35

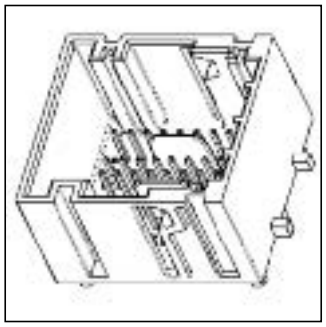

All specifications subject to change. Consult TE Connectivity for latest specifications.

Printed Circuit Board Headers

Technical Features

No. of Positions:
36 Position Assembly

Housing Material:
PBT GF

Material and Finish:
CuZn, tin plated

Product Specification:
108-20220

Application Specification:
411-20056

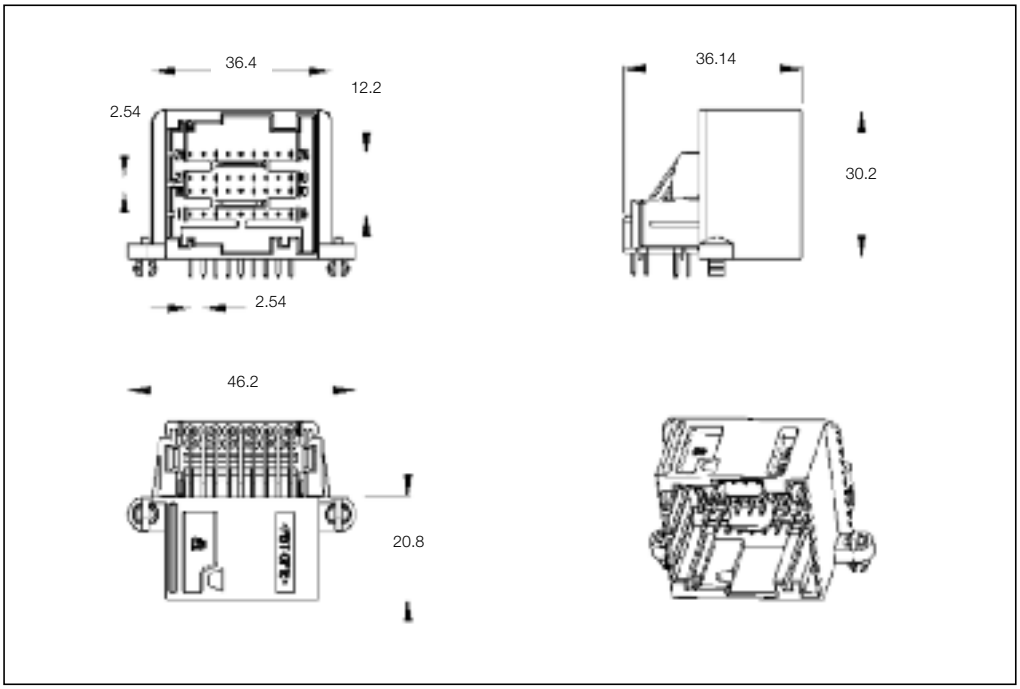

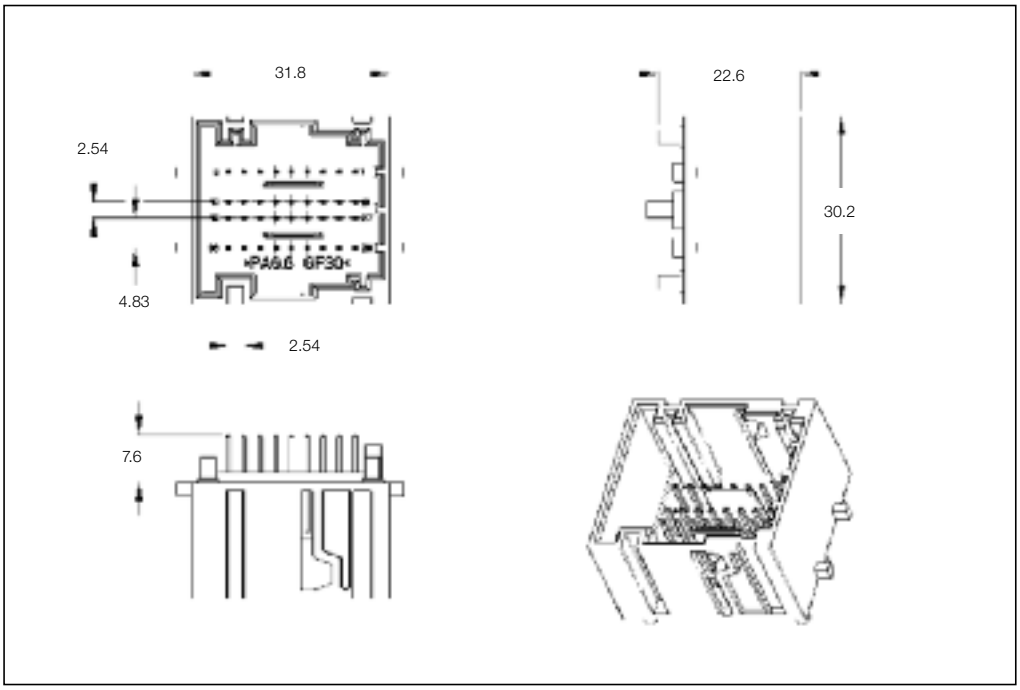

Mating Receptacle Housing
See Page 5-34

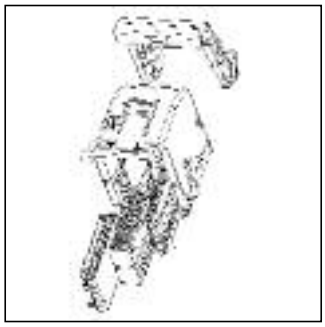

36 Position PCB Header

No. of Pos.	Keying Options	Housing Color	Part Numbers					
			PCB Header Right-Angle	PCB Header Vertical	Cover	Cover and Lever	Retainer Housing	Mating Receptacle Housing
36	–	Black	284520-1	284317-1 284317-2	–	–	–	953599-1

5

Technical Features

Application:
Body Computer

No. of Positions:
36 Positions

Housing Material:
PA66 GF30

Material and Finish:
CuSn, tin plated

Product Specification:
108-20206

Application Specification:
—

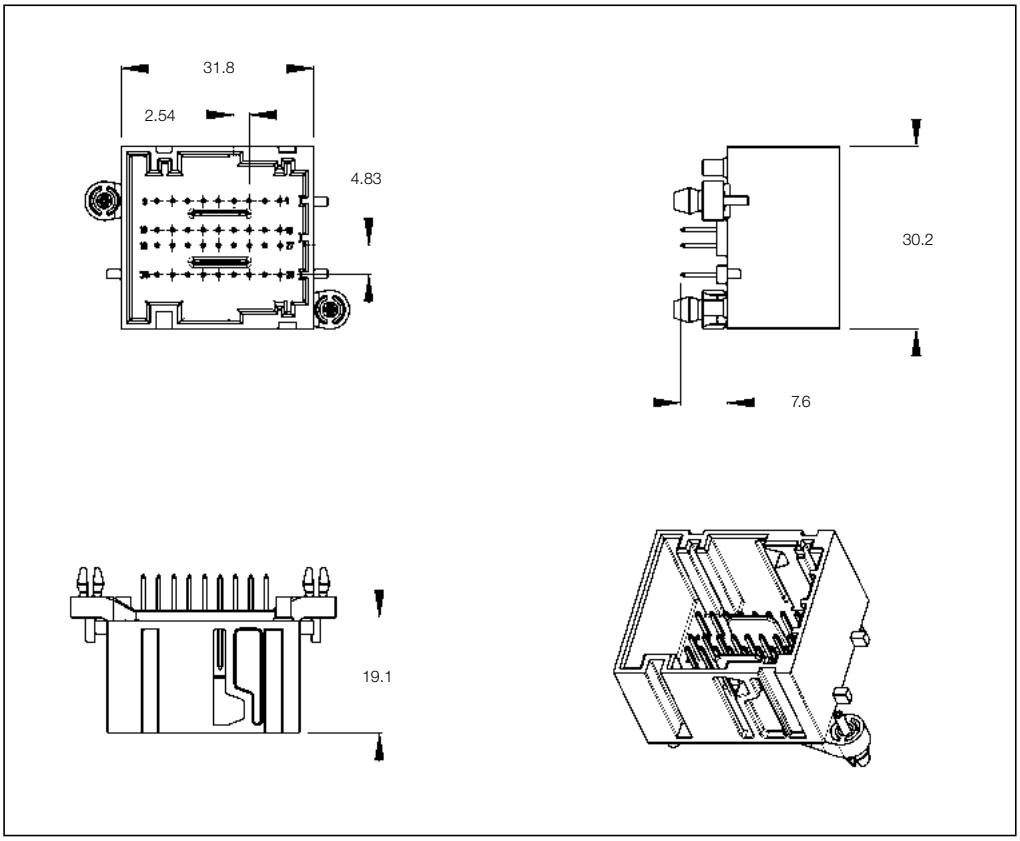

36 Position PCB Header

No. of Pos.	Keying Options	Housing Color	Part Numbers					
			PCB Header Right-Angle	PCB Header Vertical	Cover	Lever	Retainer Housing	Mating Receptacle Housing
36	–	Black	–	1599180-1	–	–	–	284137-1
								284126-1
								284126-2
								953599-1

All specifications subject to change. Consult TE Connectivity for latest specifications.

Printed Circuit Board Headers

Technical Features

Application:
Body Computer

No. of Positions:
36 Positions

Housing Material:
PA66 GF30

Material and Finish:
CuFe2, tin plated

Product Specification:
108-20206

Application Specification:
—

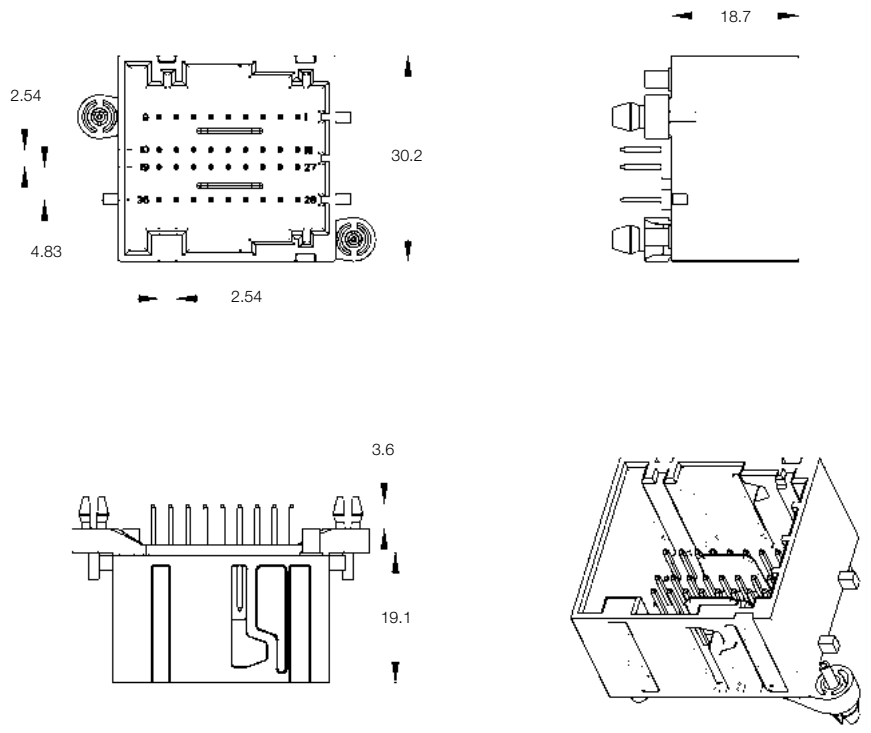

36 Position PCB Header

No. of Pos.	Keying Options	Housing Color	Part Numbers					
			PCB Header Right-Angle	PCB Header Vertical	Cover	Lever	Retainer Housing	Mating Receptacle Housing
36	–	Black	–	284976-1	–	–	–	284137-1
								284126-1
								284126-2
								953599-1

Receptacle Housings

Technical Features

No. of Positions:
40 Positions (20 + 20)

Housing Material:
PBT GF20

Wire Size Range:
0.35 – 0.75 mm^2

Product Specification:
108-15178

Application Specification:
411-15597

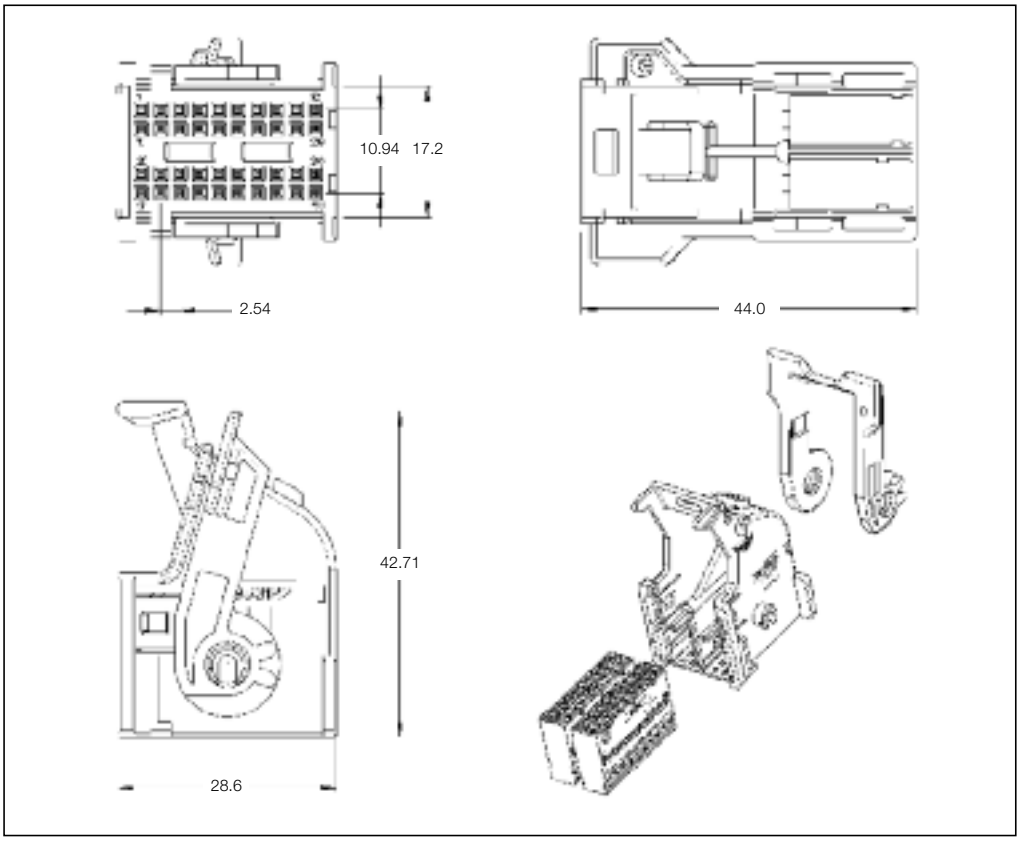

40 Position Receptacle Housings

No. of Pos.	Keying Options	Housing Color	Part Numbers: Receptacle Housing	Cover	Locking Device	Cover and Lever	Retainer Housing	Mating Pin Housing	Mating PCB Header Right-Angle	Mating PCB Header Vertical
40	–	Black	–	–	–	953122-1 or 953122-5	–	–	–	–
		Gray	–	–	–	953122-2 or 953122-6				
		White	–	–	–	953122-3 or 953122-7				
		Blue	–	–	–	953122-4 or 953122-8	–	–	–	1-953118-4
		Green	953119-1	–	–	–	–	–	–	–
		Brown	953119-2							
		Black	1-953119-3							
		White	1-953119-4							

Mating Header
See Page 5-40

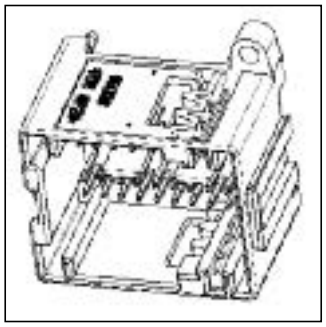

All specifications subject to change. Consult TE Connectivity for latest specifications.

Receptacle Housings

Technical Features

No. of Positions:
40 Positions (20 + 20 Kit)

Housing Material:
PA66 GF

Wire Size Range:
0.35–0.5 mm²

Product Specification:
—

Application Specification:
—

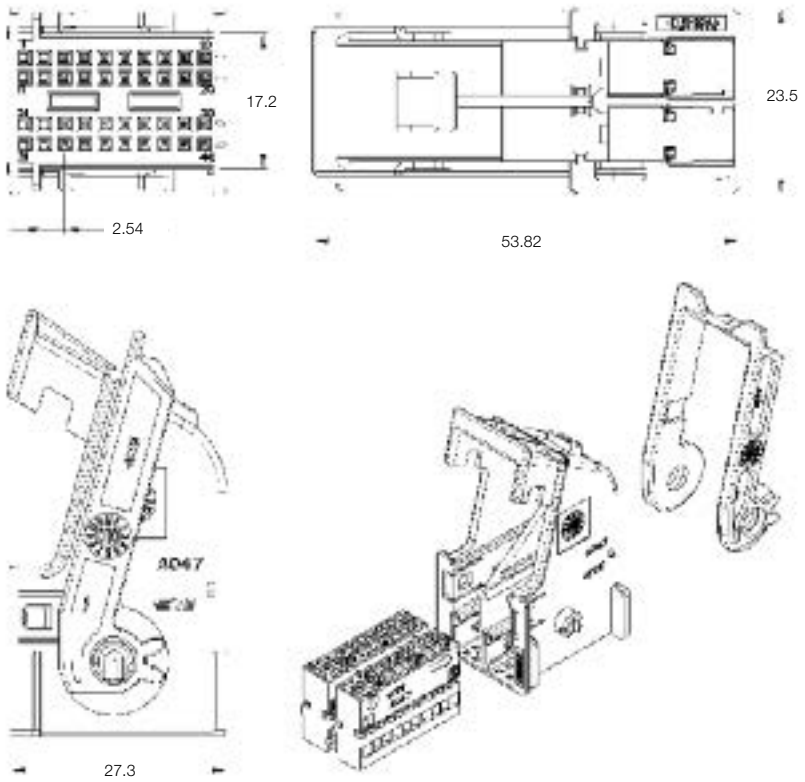

40 Position Receptacle Housings

No. of Pos.	Keying Options	Housing Color	Part Numbers							
			Receptacle Housing	Cover	Locking Device	Cover and Lever	Retainer Housing	Mating Pin Housing	Mating PCB Header Right-Angle	Mating PCB Header Vertical
40	A	Black	284229-1	284152-1	–	–	–	–	–	284316-1
	B	Blue	284229-2	284152-2	–	–	–	–	–	–

Printed Circuit Board Headers

Technical Features

No. of Positions:
40 Positions

Housing Material:
PBT GF20

Material and Finish:
See customer drawings

Product Specification:
108-15214

Application Specification:
—

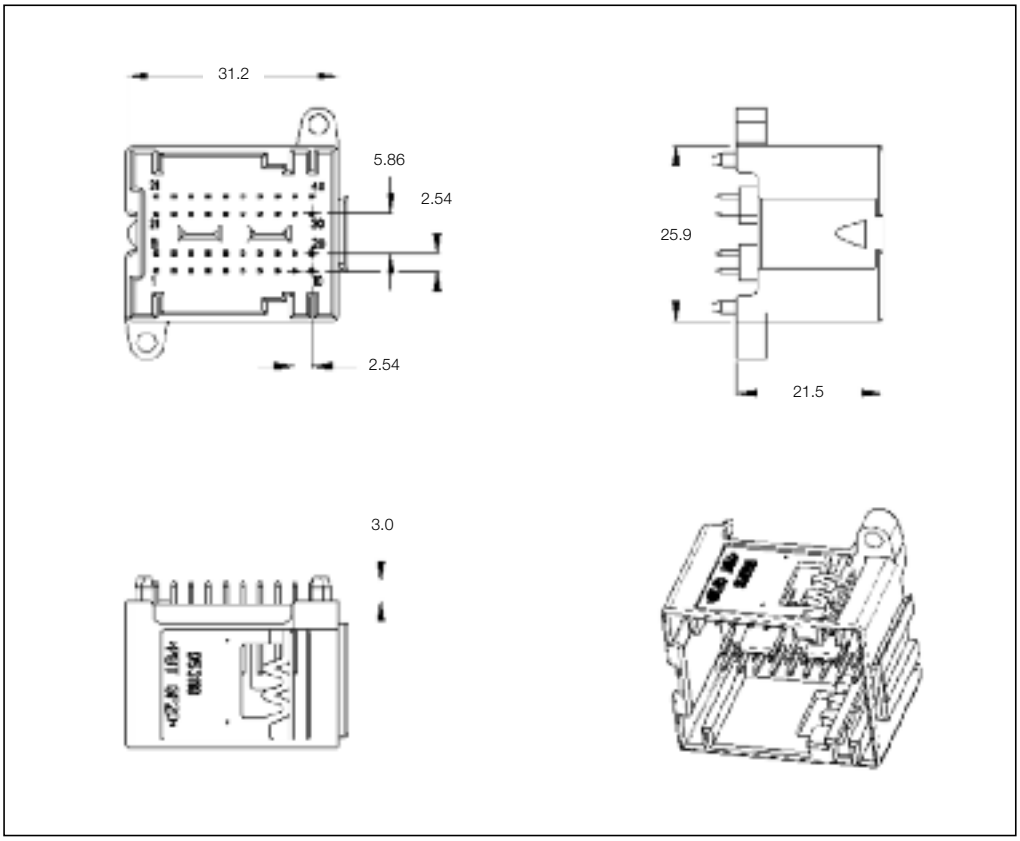

40 Position PCB Header

No. of Pos.	Keying Options	Housing Color	Part Numbers					
			PCB Header Right-Angle	PCB Header Vertical	Cover	Lever	Retainer Housing	Mating Receptacle Housing
40	See customer drawing	See customer drawing	–	953118-1/-8	–	–	1-953119-3 1-953119-4	–
			–	1-953118-3	–			
			–	1-953118-4				

Mating Receptacle Housing
See Page 5-38

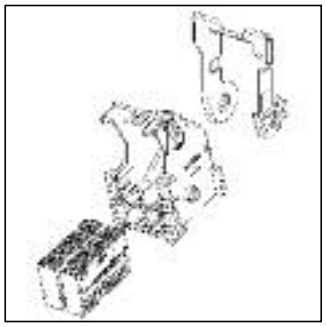

All specifications subject to change. Consult TE Connectivity for latest specifications.

Printed Circuit Board Headers

Technical Features

No. of Positions:
40 Positions

Housing Material:
PA66 GF30

Material and Finish:
CuSn, tinned

Product Specification:
108-20206

Application Specification:
—

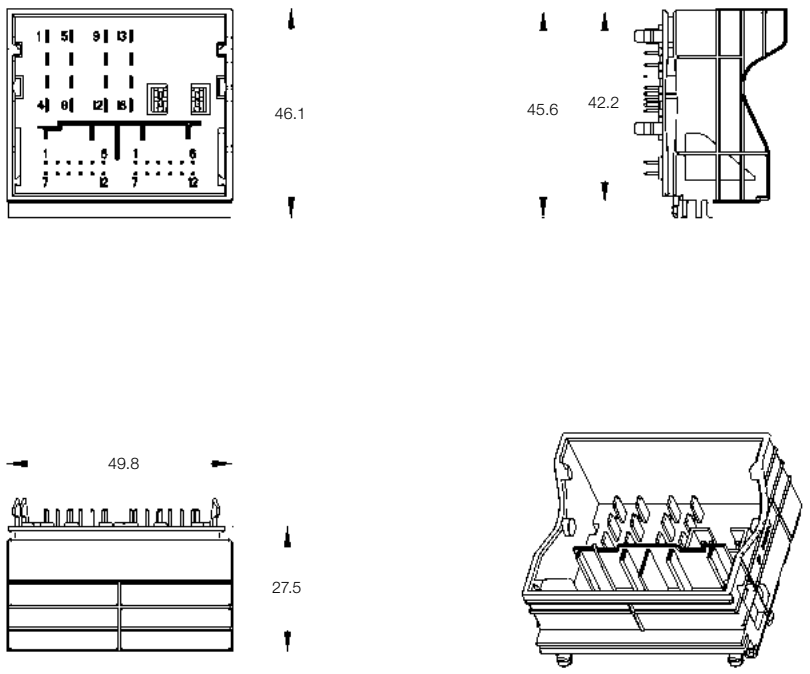

40 Position PCB Header

No. of Pos.	Keying Options	Housing Color	Part Numbers					
			PCB Header Right-Angle	PCB Header Vertical	Cover	Lever	Retainer Housing	Mating Receptacle Housing
40	–	Black	–	1718162-1	–	–	–	1241765-2
			–	1718162-3				1-1355035-1

Printed Circuit Board Headers

5

Technical Features

No. of Positions:
40 Positions

Housing Material:
PA66 GF30

Material and Finish:
CuSn, tinned

Product Specification:
108-15214

Application Specification:
—

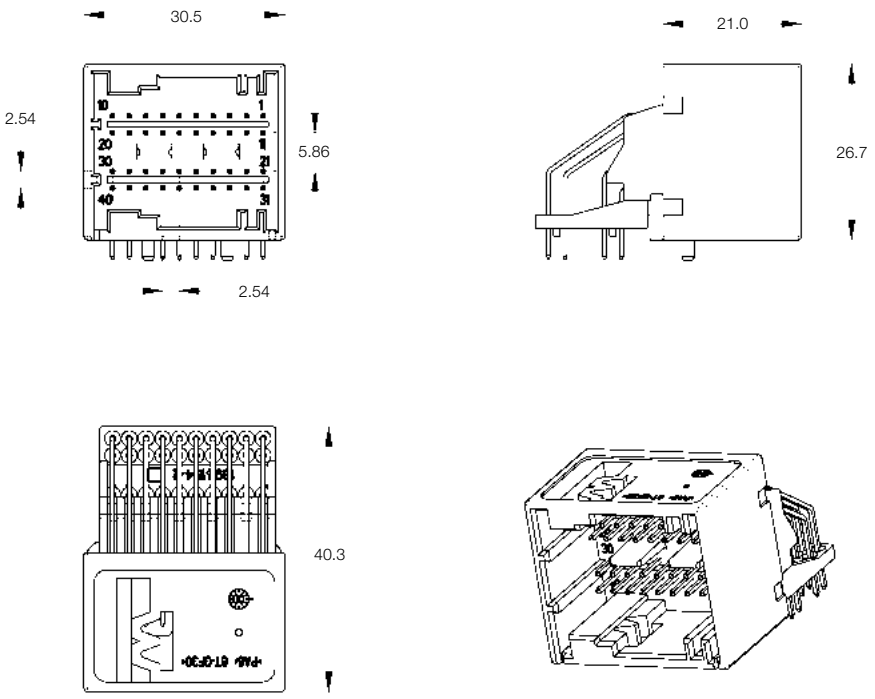

40 Position PCB Header

No. of Pos.	Keying Options	Housing Color	Part Numbers					
			PCB Header Right-Angle	PCB Header Vertical	Cover	Lever	Retainer Housing	Mating Receptacle Housing
40	–	Black	1-1394155-4	–		–	–	1-968322-1 2-968322-1

All specifications subject to change. Consult TE Connectivity for latest specifications.

Printed Circuit Board Headers

Technical Features

No. of Positions:
40 Positions

Housing Material:
PBT GF

Material and Finish:
See customer drawing

Product Specification:
108-15214

Application Specification:
—

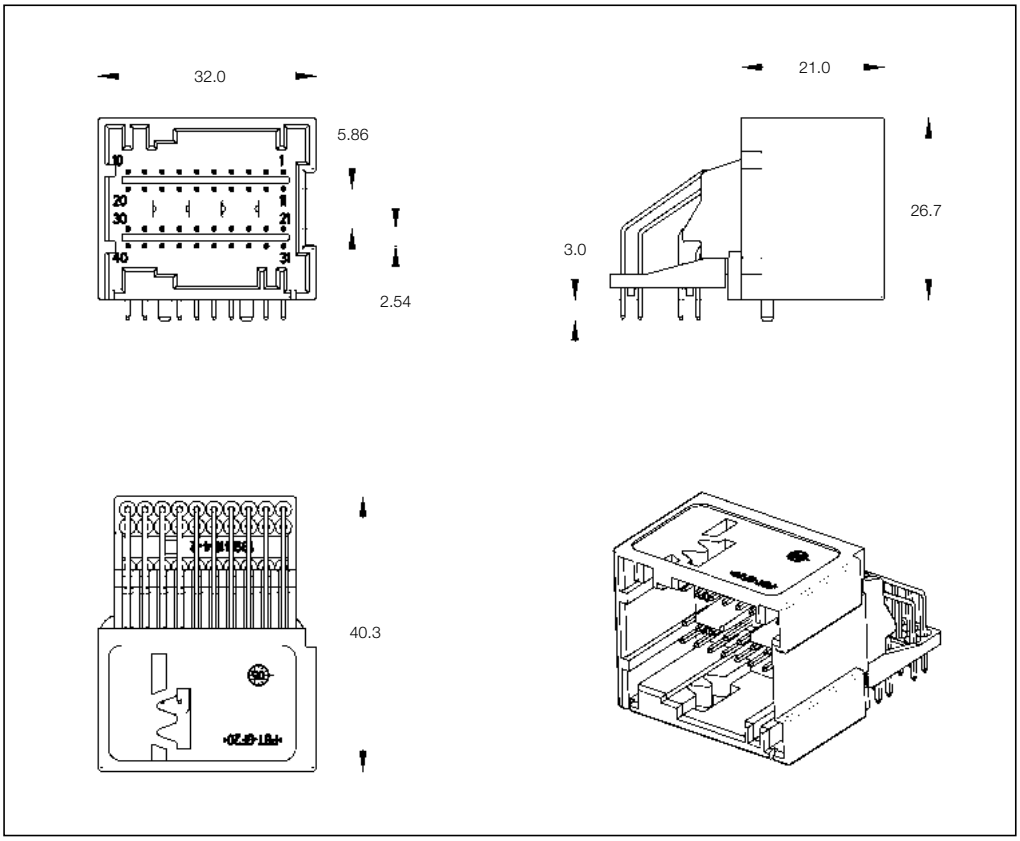

40 Position PCB Header

No. of Pos.	Keying Options	Housing Color	Part Numbers					
			PCB Header Right-Angle	PCB Header Vertical	Cover	Lever	Retainer Housing	Mating Receptacle Housing
40	–	Gray	1745060-1	–	–	–	–	–

Receptacle Housings

Technical Features

No. of Positions:
42 Positions

Housing Material:
PBT GF15

Wire Size Range:
0.20–0.75 mm^2

Product Specification:
108-18685-1

Application Specification:
114-18332-1

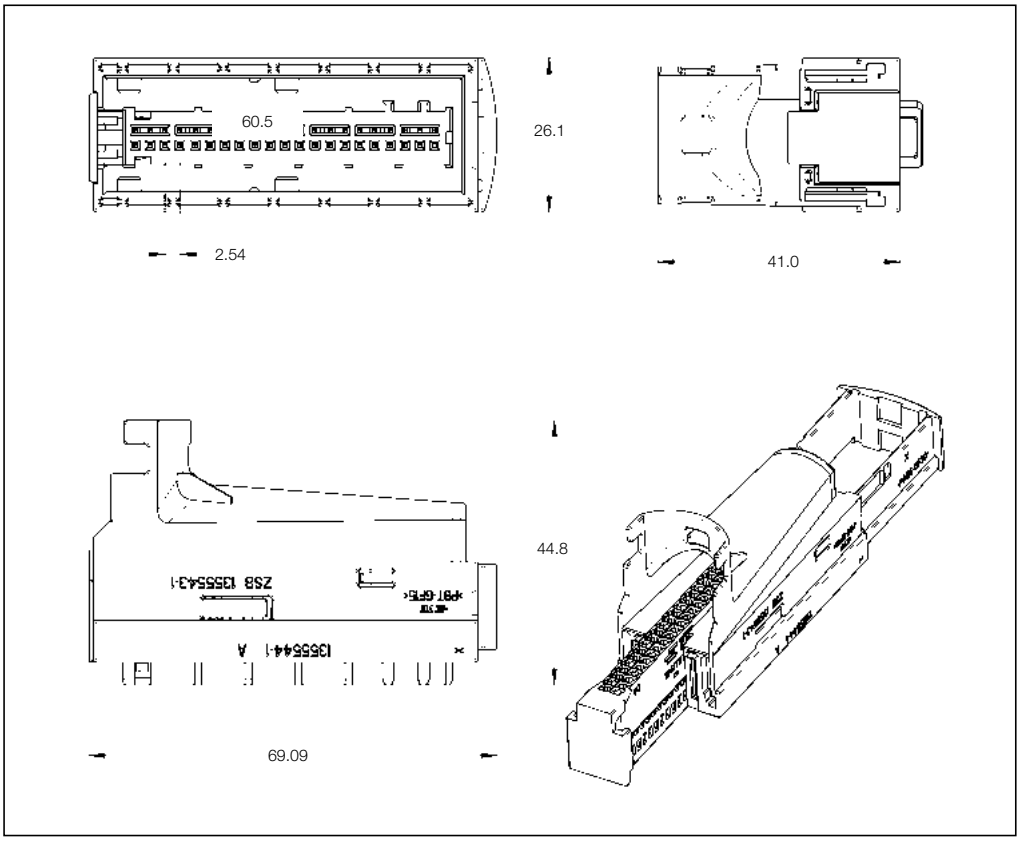

42 Position Receptacle Housings

No. of Pos.	Keying Options	Housing Color	Part Numbers						
			Receptacle Housing	Cover	Lever	Retainer Housing	Mating Pin Housing	Mating PCB Header Right-Angle	Mating PCB Header Vertical
42	–	Black	1241727-1	1355543-1 (Cod B, blue)	–	–	–	–	1534346-1
				1355543-2 (Cod A, black)					1534346-2
									1534346-3

All specifications subject to change. Consult TE Connectivity for latest specifications.

Printed Circuit Board Headers

Technical Features

No. of Positions:
48 Positions (24 + 24)

Housing Material:
PBT GF10

Material and Finish:
CuSn6, gold plated / tin at soldering area

Product Specification:
108-15214

Application Specification:
—

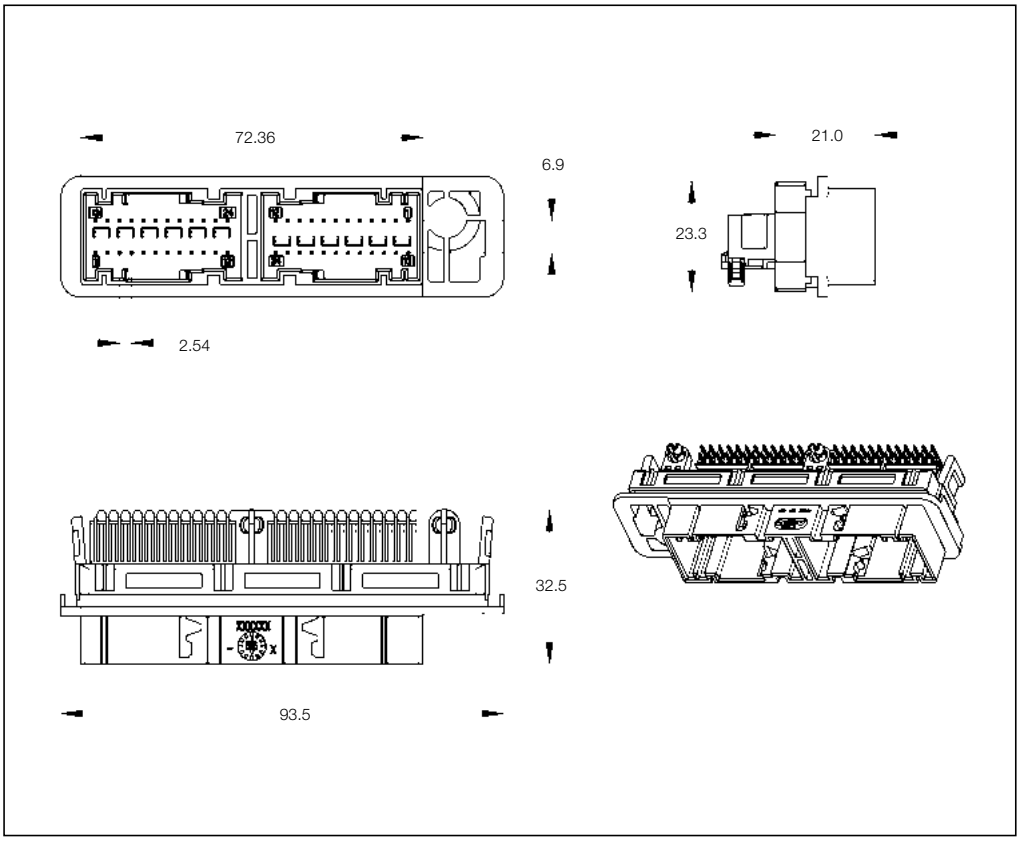

48 Position PCB Header

No. of Pos.	Keying Options	Housing Color	Part Numbers					
			PCB Header Right-Angle	PCB Header Vertical	Cover	Lever	Retainer Housing	Mating Receptacle Housing
48	See customer drawing	See customer drawing	1801317-1/-4 1801317-6/-9	–	–	–	–	–

Receptacle Housings

Technical Features

Application:
Airbag

No. of Positions:
50 Position Assembly

Housing Material:
PBT GF20

Wire Size Range:
0.25–0.75 mm^2

Product Specification:
108-61031

Application Specification:
114-18021

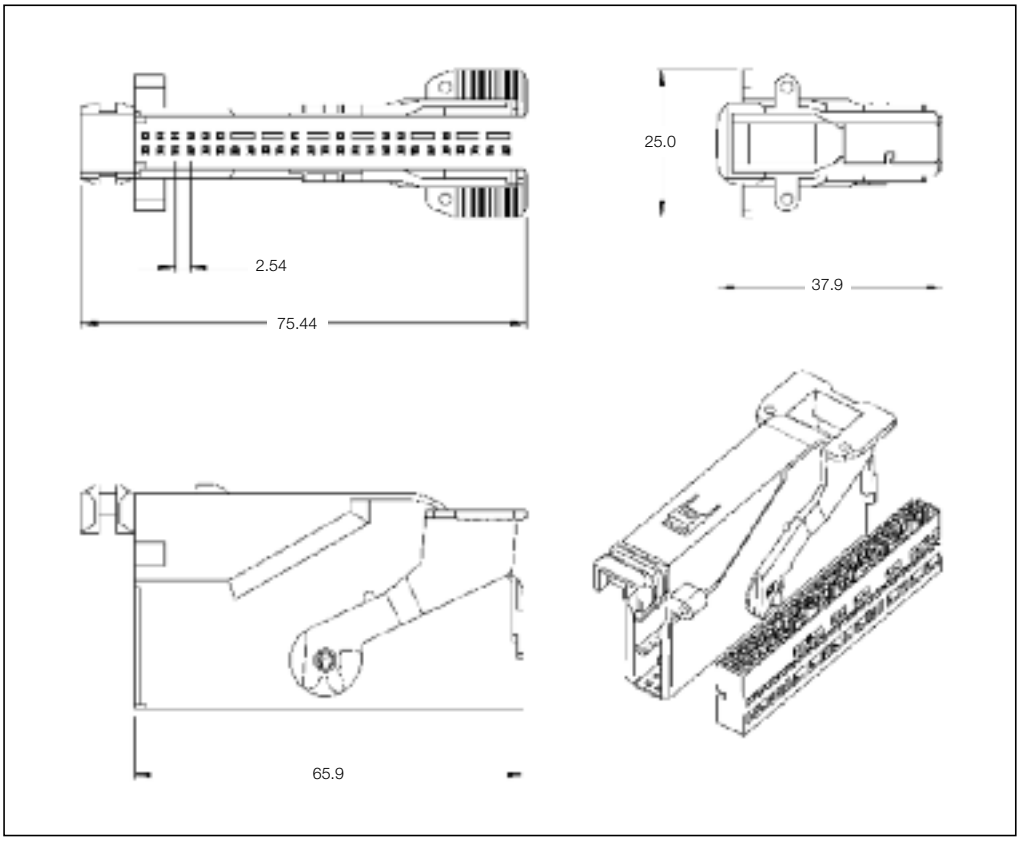

50 Position Receptacle Housings

No. of Pos.	Keying Options	Housing Color	Part Numbers							
			Receptacle Housing	Cover	Locking Device	Cover and Lever	Retainer Housing	Mating Pin Housing	Mating PCB Header Right-Angle	Mating PCB Header Vertical
50	–	Black	368233-1	–	–	368231-1/-5	–	–	368213-1/-5	–
						1-368231-2/-9	–	–	1-368213-2/-9	–

All specifications subject to change. Consult TE Connectivity for latest specifications.

Receptacle Housings

Technical Features

Application:
Body Computer

No. of Positions:
52 Position Assembly

Housing Material:
PA66 GF13

Wire Size Range:
0.20–0.75 mm^2

Product Specification:
—

Application Specification:
—

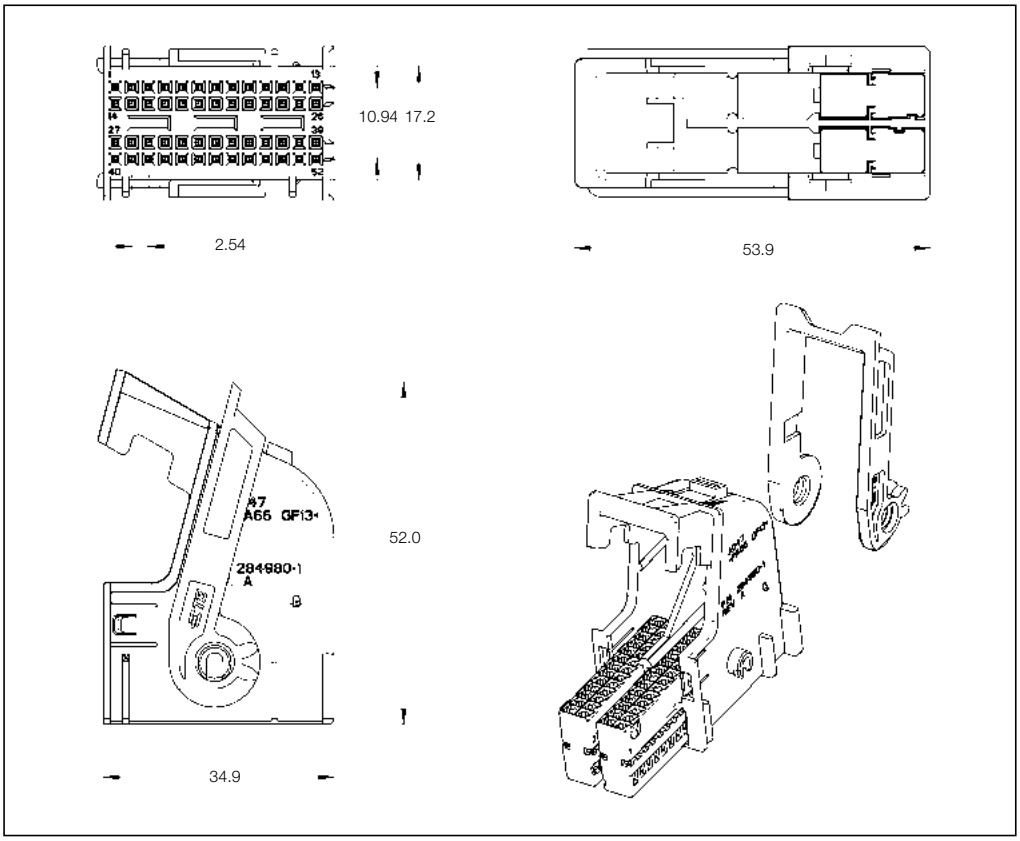

52 Position Receptacle Housings

No. of Pos.	Keying Options	Housing Color	Part Numbers						
			Receptacle Housing	Cover	Lever	Retainer Housing	Mating Pin Housing	Mating PCB Header Right-Angle	Mating PCB Header Vertical
52	–	Black	284972-1	–	–	–	–	284975-1	–
		Blue	284972-2					284975-2	

Mating Header
See Page 5-48

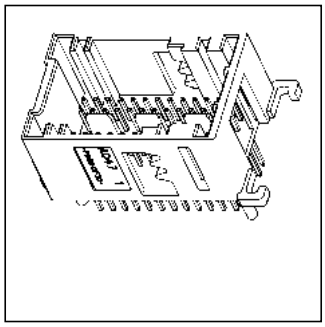

Printed Circuit Board Headers

Technical Features

Application:
Body Computer

No. of Positions:
52 Positions

Housing Material:
PA66

Material and Finish:
CuFe2 tin plated

Product Specification:
—

Application Specification:
—

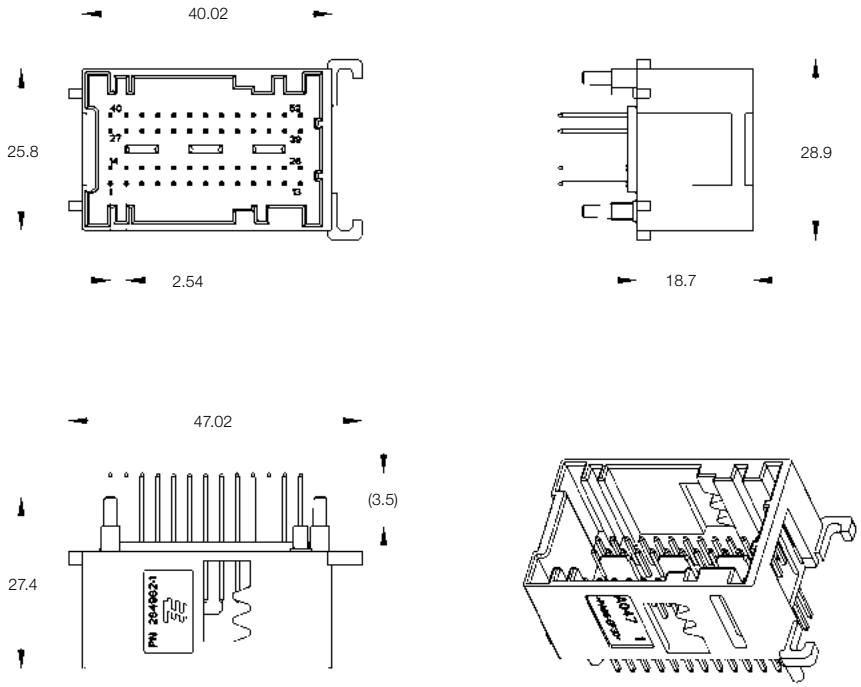

52 Position PCB Header

No. of Pos.	Keying Options	Housing Color	Part Numbers					
			PCB Header Right-Angle	PCB Header Vertical	Cover	Lever	Retainer Housing	Mating Receptacle Housing
52	–	Black	–	284975-1	–	–	–	284972-1
			–	294975-2				284972-2

Mating Receptacle Housing
See Page 5-47

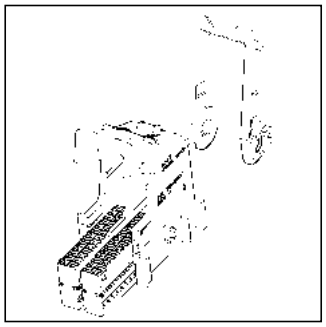

All specifications subject to change. Consult TE Connectivity for latest specifications.

Printed Circuit Board Headers

Technical Features

Application:
Airbag

No. of Positions:
56 Position Assembly

Housing Material:
PBT GF30

Wire Size Range:
0.20–0.75 mm^2

Product Specification:
—

Application Specification:
—

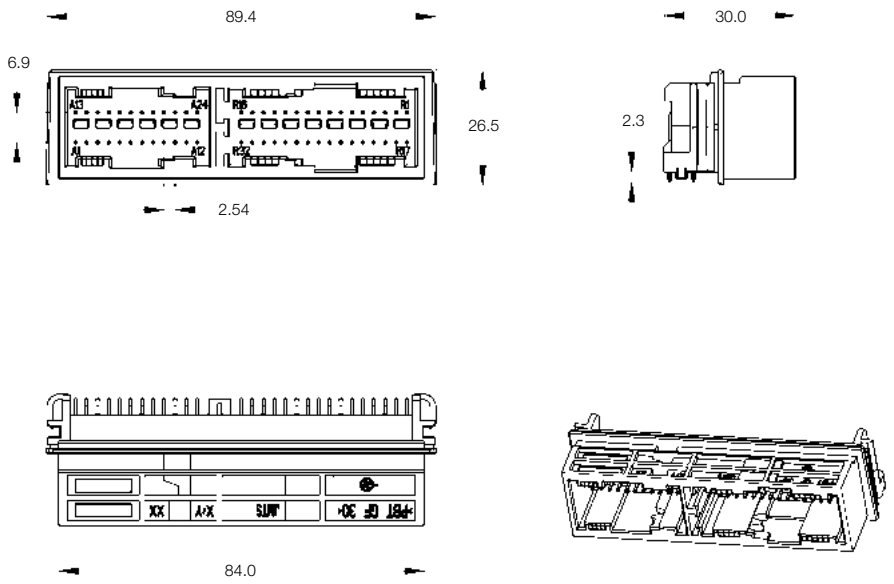

56 Position Receptacle Housings

No. of Pos.	Keying Options	Housing Color	Part Numbers						
			Receptacle Housing	Cover	Lever	Retainer Housing	Mating Pin Housing	Mating PCB Header Right-Angle	Mating PCB Header Vertical
56	See customer drawing	See customer drawing	1418939-1/-9 1-1418939-1/-9 2-1418939-1/-9 3-1418939-1/-9	–	–	–	see customer drawing	–	–

Printed Circuit Board Headers

Technical Features

No. of Positions:
56 (24 + 32) Positions Mixed

Housing Material:
PBT GF20

Material and Finish:
CuSn, post tin plated

Product Specification:
108-15312

Application Specification:
—

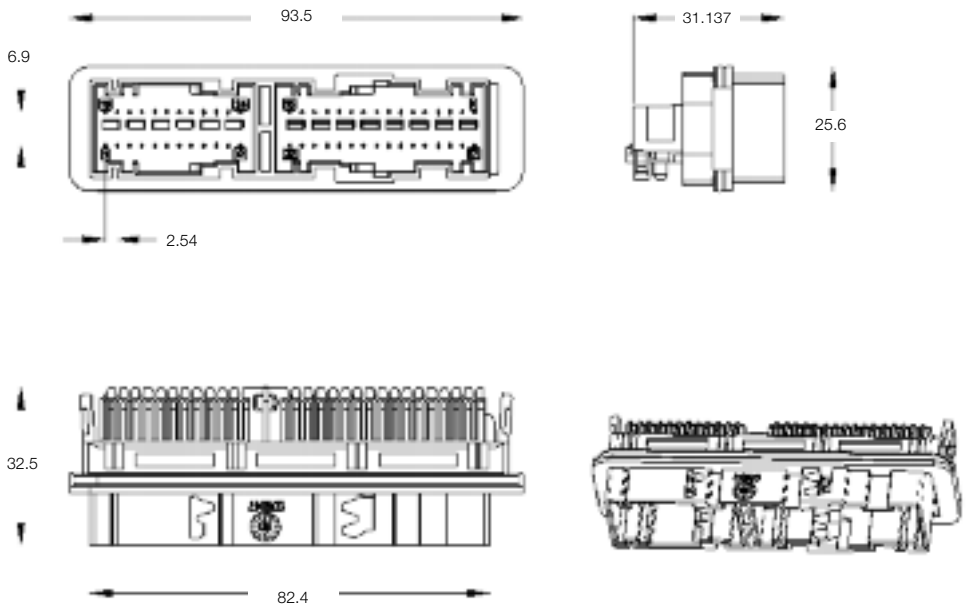

56 Position PCB Header

No. of Pos.	Keying Options	Housing Color	Part Numbers					
			PCB Header Right-Angle	PCB Header Vertical	Cover	Cover and Lever	Retainer Housing	Mating Counter Part
56	A-A	Black	1379046-1	–	–	–	–	–
	B-A	Black	1379046-2	–				
	B-B	Black	1379046-3	–				
	B-C	Black	1379046-4	–				
	A-E	Black	1379046-5	–				

All specifications subject to change. Consult TE Connectivity for latest specifications.

Receptacle Housings

Technical Features

No. of Positions:
75 Positions

Housing Material:
PA66 GF15

Wire Size Range:
0.20–0.75 mm^2

Product Specification:
—

Application Specification:
—

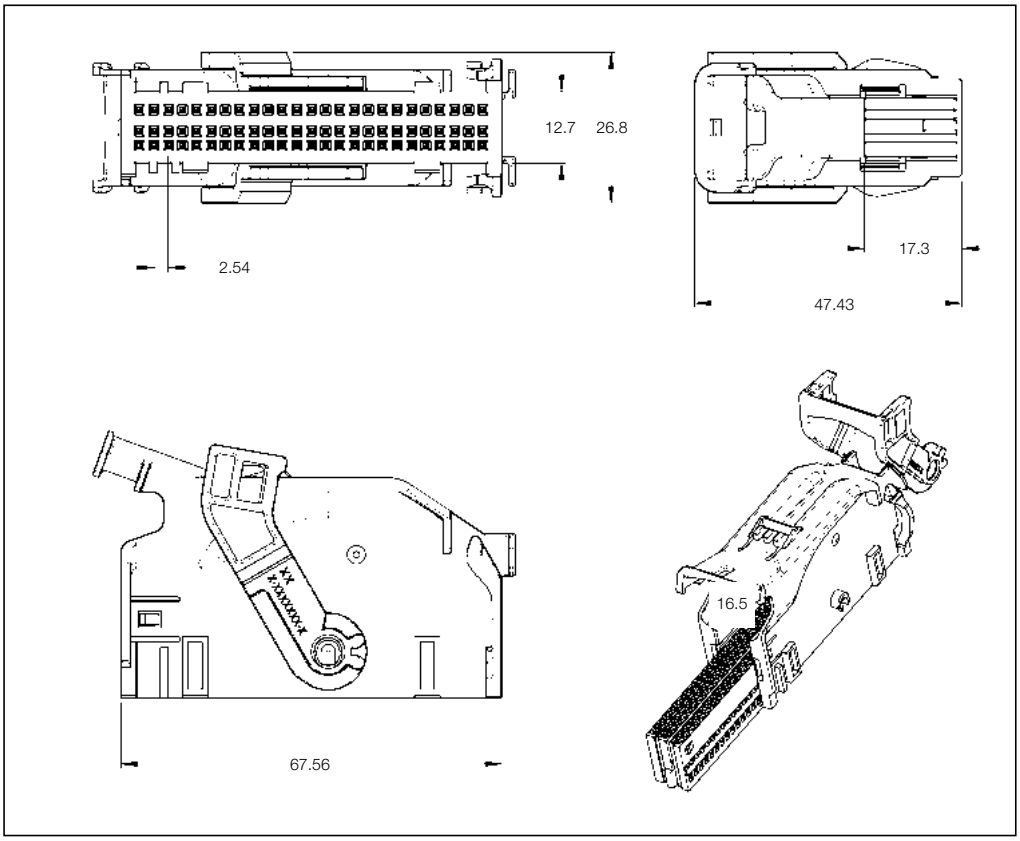

25 Position Receptacle Housings

No. of Pos.	Keying Options	Housing Color	Part Numbers						
			Receptacle Housing	Cover	Lever	Retainer Housing	Mating Pin Housing	Mating PCB Header Right-Angle	Mating PCB Header Vertical
50	D–H	Black	1-1703941-1	1-1703938-1	–	–	–	–	–
25		Gray	1-1703942-1						
50	C–H	Blue	2-1703941-1	2-1703938-1	–	–	–	–	–
25		Gray	1-1703942-1						

Printed Circuit Board Headers

Technical Features

Application:
Airbag

No. of Positions:
75 Positions

Housing Material:
PBT GF20

Material and Finish:
See customer drawing

Product Specification:
—

Application Specification:
—

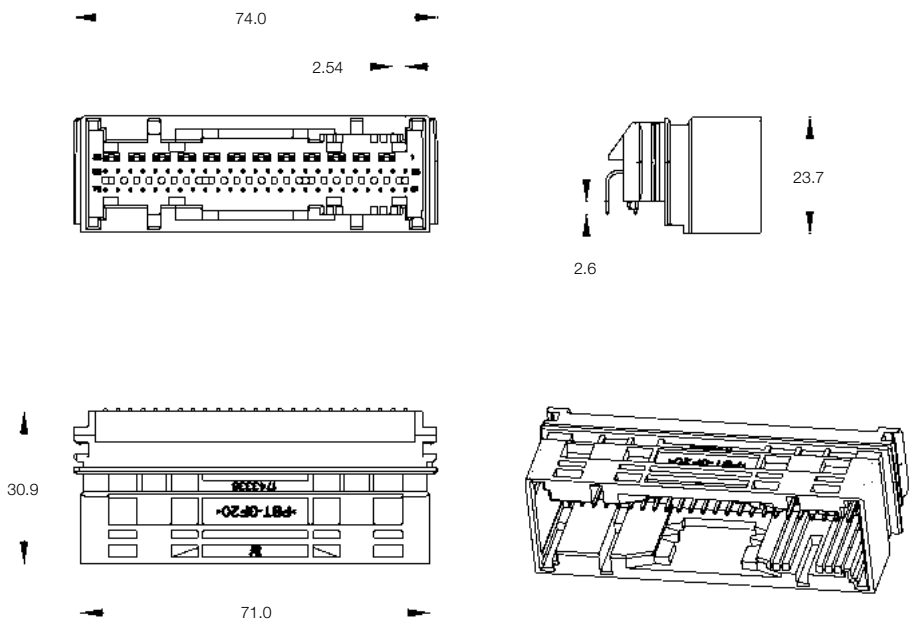

75 Position PCB Header

No. of Pos.	Keying Options	Housing Color	Part Numbers					
			PCB Header Right-Angle	PCB Header Vertical	Cover	Lever	Retainer Housing	Mating Receptacle Housing
75	See customer drawing	See customer drawing	1-1743336-1/-9 2-1743336-1/-9 3-1743336-1/-9 4-1743336-1/-9 5-1743336-1/-9 6-1743336-1/-9 7-1743336-1/-9	–	–	1-1703938-1 2-1703938-1	–	–

All specifications subject to change. Consult TE Connectivity for latest specifications.

Printed Circuit Board Headers

Technical Features

No. of Positions:
94 Positions

Housing Material:
PBT GF20

Material and Finish:
See customer drawing

Product Specification:
—

Application Specification:
—

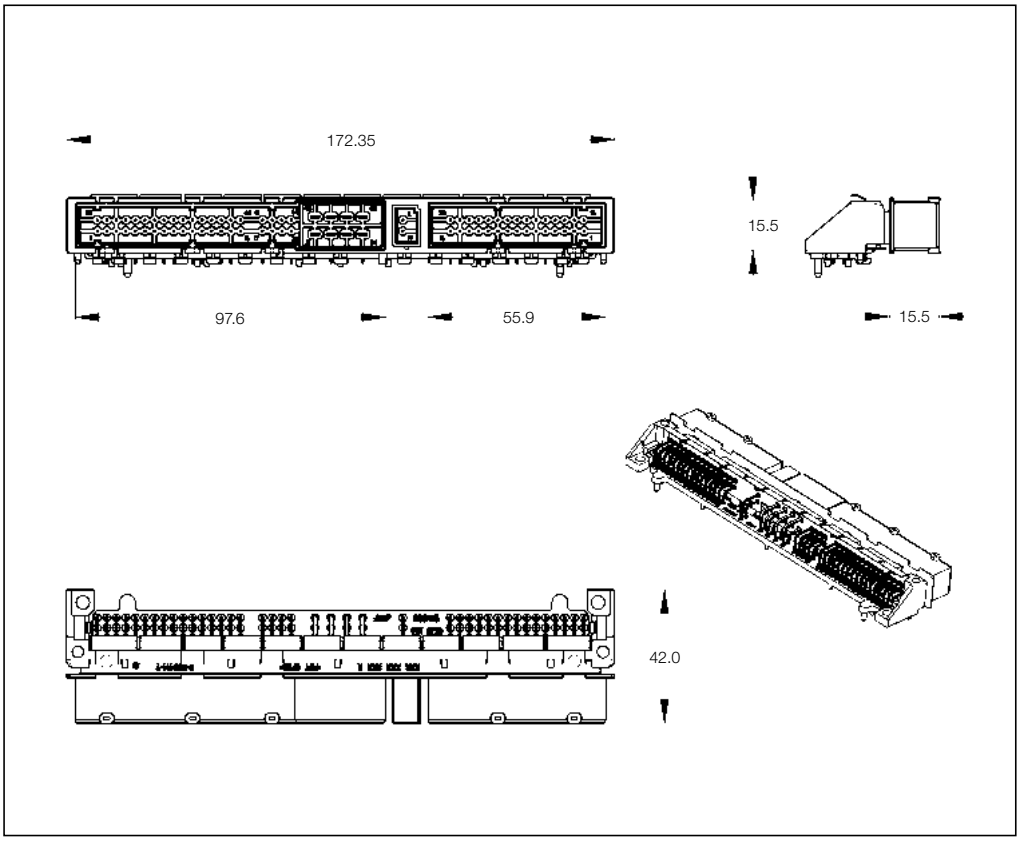

94 Position PCB Header

No. of Pos.	Keying Options	Housing Color	Part Numbers					
			PCB Header Right-Angle	PCB Header Vertical	Cover	Lever	Retainer Housing	Mating Receptacle Housing
94	–	see drawing	X-967224-Y	–	–	–	–	–

Printed Circuit Board Headers

Technical Features

Application:
ECU

No. of Positions:
115 Positions

Housing Material:
PCT GF30

Material and Finish:
CuZn, gold/tin plated

Product Specification:
108-61039

Application Specification:
114-18021-1

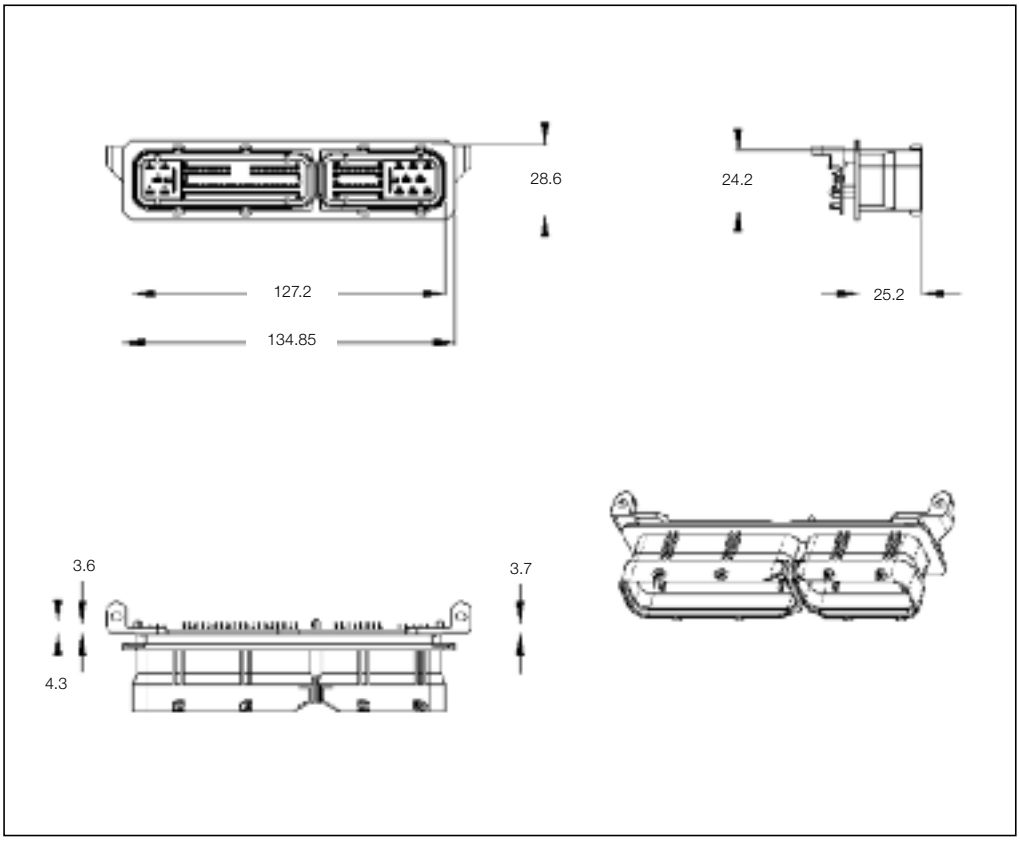

115 Position PCB Header

No. of Pos.	Keying Options	Housing Color	Part Numbers					
			PCB Header Right-Angle	PCB Header Vertical	Cover	Cover and Lever	Retainer Housing	Mating Receptacle Housing
115	–	Black	368146-1	–	–	–	–	368376-1
			368146-2	–				
			368146-3	–				

All specifications subject to change. Consult TE Connectivity for latest specifications.

Receptacle Housings

Technical Features

No. of Positions:
121 Position Assembly for MQS and Junior Power Timer

Housing Material:
PBT GF20

Wire Size Range:
0.20–0.75 mm^2

Product Specification:
108-5799

Application Specification:
114-18021/18050

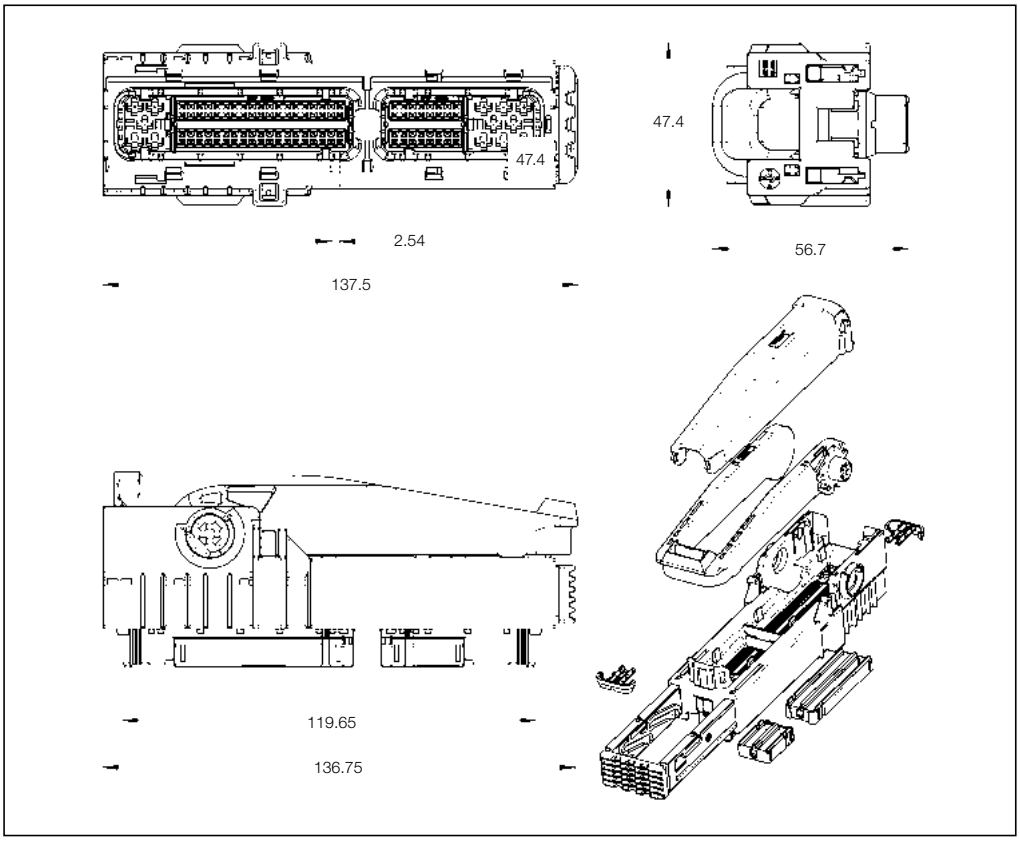

121 Position Receptacle Housings

No. of Pos.	Keying Options	Housing Color	Part Numbers						
			Receptacle Housing	Cover	Lever	Retainer Housing	Mating Pin Housing	Mating PCB Header Right-Angle	Mating PCB Header Vertical
121	–	Black	1565416-1	1565422-1	–	–	–	–	–

Printed Circuit Board Headers

Technical Features

No. of Positions:
121 (81/40) Position Assembly

Housing Material:
PA66 GF30

Material and Finish:
CuSn6, tin plated

Product Specification:
108-5793

Application Specification:
411-78008

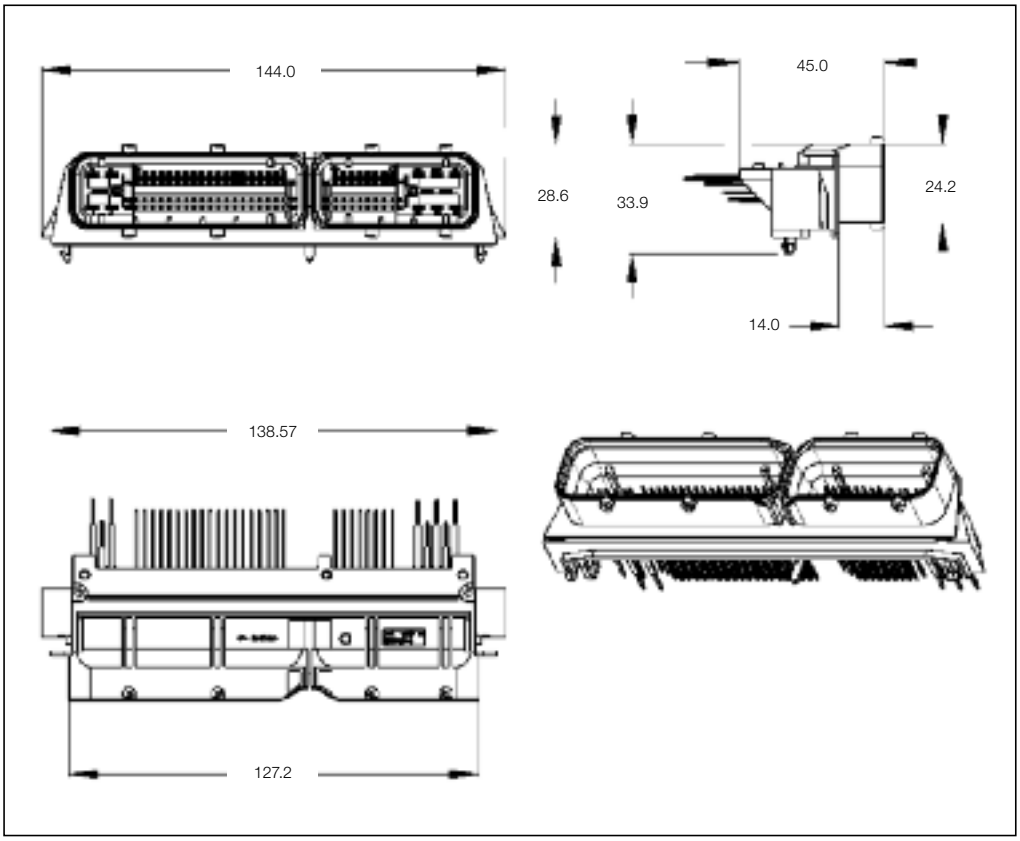

81/40 Position PCB Header

No. of Pos.	Keying Options	Housing Color	Part Numbers					
			PCB Header Right-Angle	PCB Header Vertical	Cover	Cover and Lever	Retainer Housing	Mating Receptacle Housing
81/40	see drawing	Black	1241434-1	–	–	–	–	1355171-1 + 1355172-1
			1241434-2					1355171-2 + 1355172-1
			1241434-3					1355171-1 + 1355172-1

All specifications subject to change. Consult TE Connectivity for latest specifications.

Receptacle Housings

Technical Features

No. of Positions:
2 Positions

Housing Material:
PBT Glas fibre reinforced

Wire Size Range:
0.22–0.35 mm^2

Product Specification:
108-94320

Application Specification:
114-94174

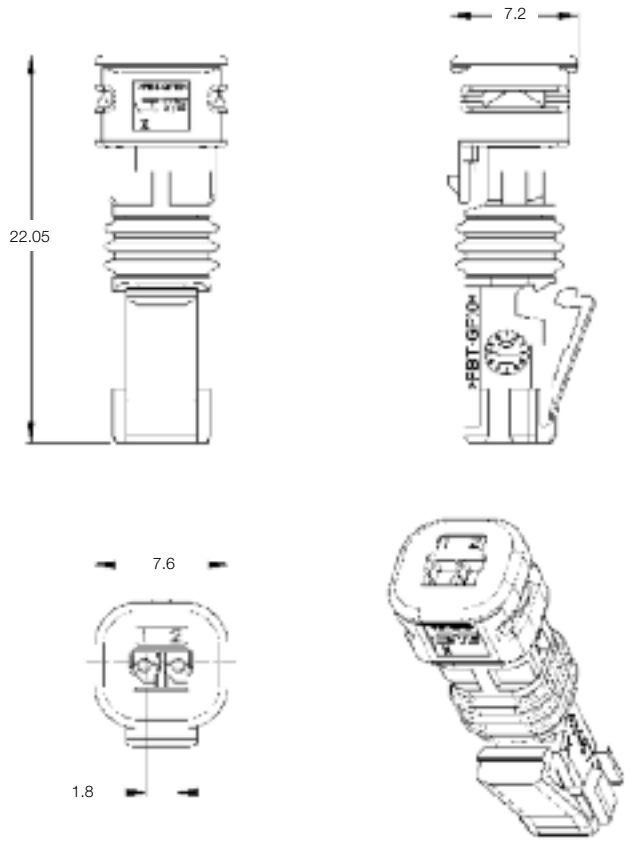

Receptacle Housings

No. of Positions	Keying Options	Housing Color	Part Numbers						
			Receptacle Housing	Cover	Locking Device	Cover and Lever	Mating Tab Housing	Mating PCB Headers	
								Right Angle	Vertical
2 pos.	Coding A	Black	2141467-1	N/A	N/A	N/A	114-94000-14	–	–
2 pos.	Coding B	Grey	2141467-2	N/A	N/A	N/A	114-94000-14	–	–
2 pos.	Coding C	Blue	2141467-3	N/A	N/A	N/A	114-94000-14	–	–

Technical Features

No. of Positions:
4 Positions

Housing Material:
PBT Glas fibre reinforced

Wire Size Range:
0.22–0.35 mm^2

Product Specification:
108-94320

Application Specification:
114-94174

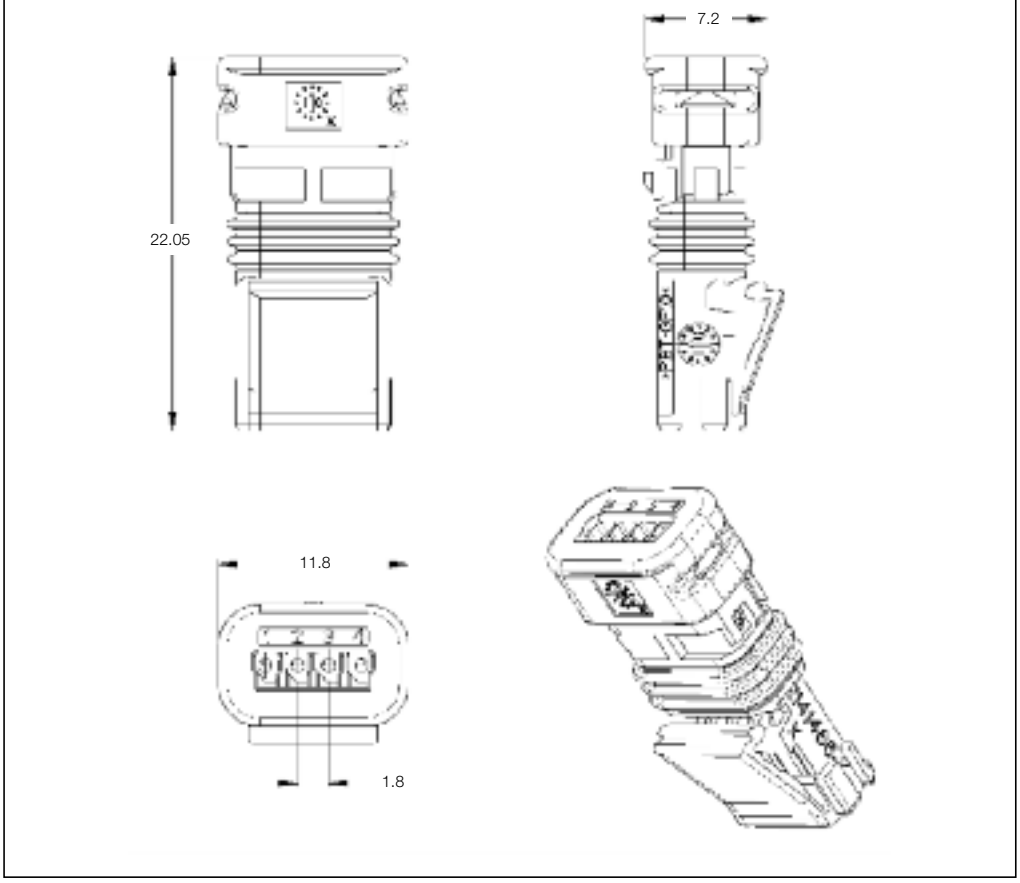

Receptacle Housings

No. of Positions	Keying Options	Housing Color	Part Numbers						
			Receptacle Housing	Cover	Locking Device	Cover and Lever	Mating Tab Housing	Mating PCB Headers	
								Right Angle	Vertical
4 pos.	Coding A	Black	2141466-1	N/A	N/A	N/A	114-94000-14	–	–

All specifications subject to change. Consult TE Connectivity for latest specifications.

Receptacle Housings

Technical Features

No. of Positions:
2–6 Positions

Housing Material:
PBT Glas fibre reinforced

Wire Size Range:
0.22–0.35 mm^2

Product Specification:
108-94288-4

Application Specification:
114-94033

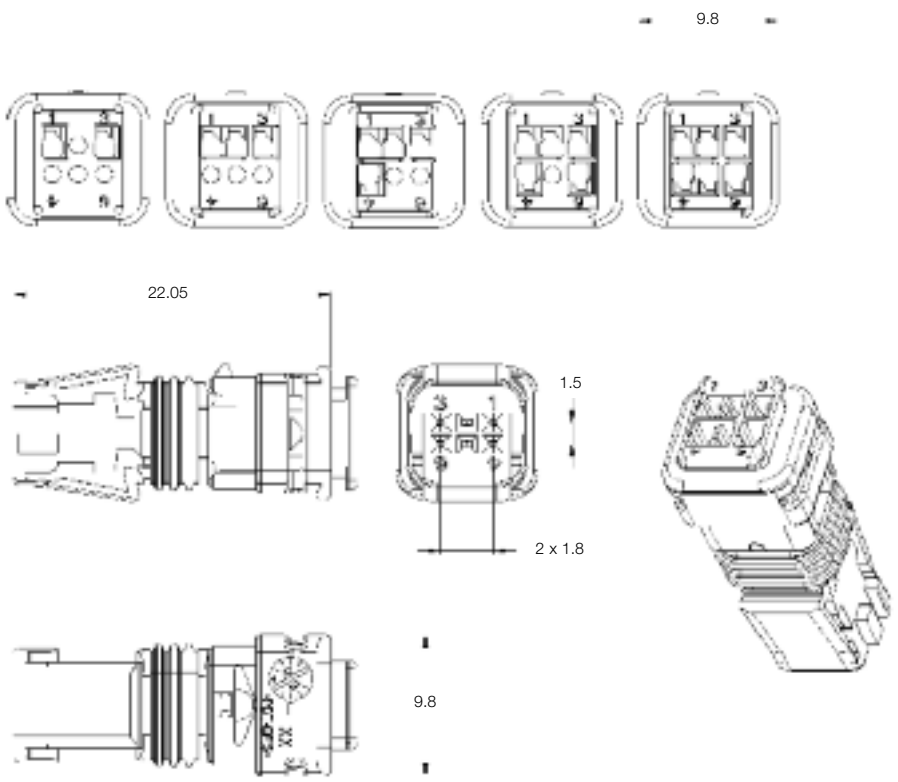

Receptacle Housings

No. of Positions	Keying Options	Housing Color	Part Numbers						
			Receptacle Housing	Cover	Locking Device	Cover and Lever	Mating Tab Housing	Mating PCB Headers	
								Right Angle	Vertical
6 pos.	Coding A	Black	0-2112594-1	N/A	N/A	N/A	–	–	–
6 pos.	Coding B	Grey	0-2112594-2	N/A	N/A	N/A	–	–	–
5 pos.	Coding A	Black	5-2112594-1	N/A	N/A	N/A	–	–	–
5 pos.	Coding B	Grey	5-2112594-2	N/A	N/A	N/A	–	–	–
4 pos.	Coding A	Black	4-2112594-1	N/A	N/A	N/A	–	–	–
4 pos.	Coding B	Grey	4-2112594-2	N/A	N/A	N/A	–	–	–
3 pos.	Coding A	Black	3-2112594-1	N/A	N/A	N/A	–	–	–
3 pos.	Coding B	Grey	3-2112594-2	N/A	N/A	N/A	–	–	–
2 pos.	Coding A	Black	2-2112594-1	N/A	N/A	N/A	–	–	–
2 pos.	Coding B	Grey	2-2112594-2	N/A	N/A	N/A	–	–	–

Receptacle Housings

Technical Features

No. of Positions:
6 Positions

Housing Material:
PBT Glas fibre reinforced

Wire Size Range:
0.22–0.35 mm^2

Product Specification:
108-94288-4

Application Specification:
114-94033

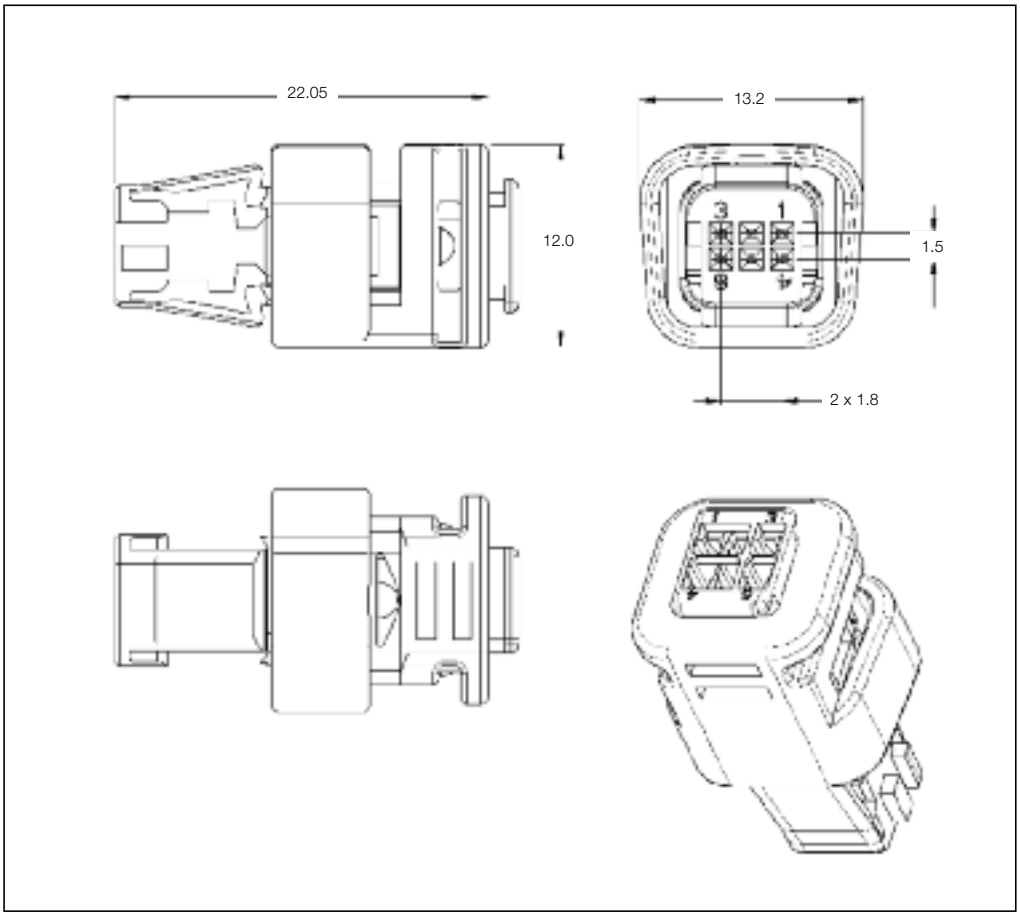

Receptacle Housings

No. of Positions	Keying Options	Housing Color	Part Numbers						
			Receptacle Housing	Cover	Locking Device	Cover and Lever	Mating Tab Housing	Mating PCB Headers	
								Right Angle	Vertical
6 pos.	Coding A	Black	0-2112593-1	N/A	N/A	N/A	–	–	–
6 pos.	Coding B	Grey	0-2112593-2	N/A	N/A	N/A	–	–	–

All specifications subject to change. Consult TE Connectivity for latest specifications.

Receptacle Housings

Technical Features

No. of Positions:
2 Position Assembly

Housing Material:
PBT GF15

Wire Size Range:
0.20 – 0.75 mm^2

Product Specification:
—

Application Specification:
—

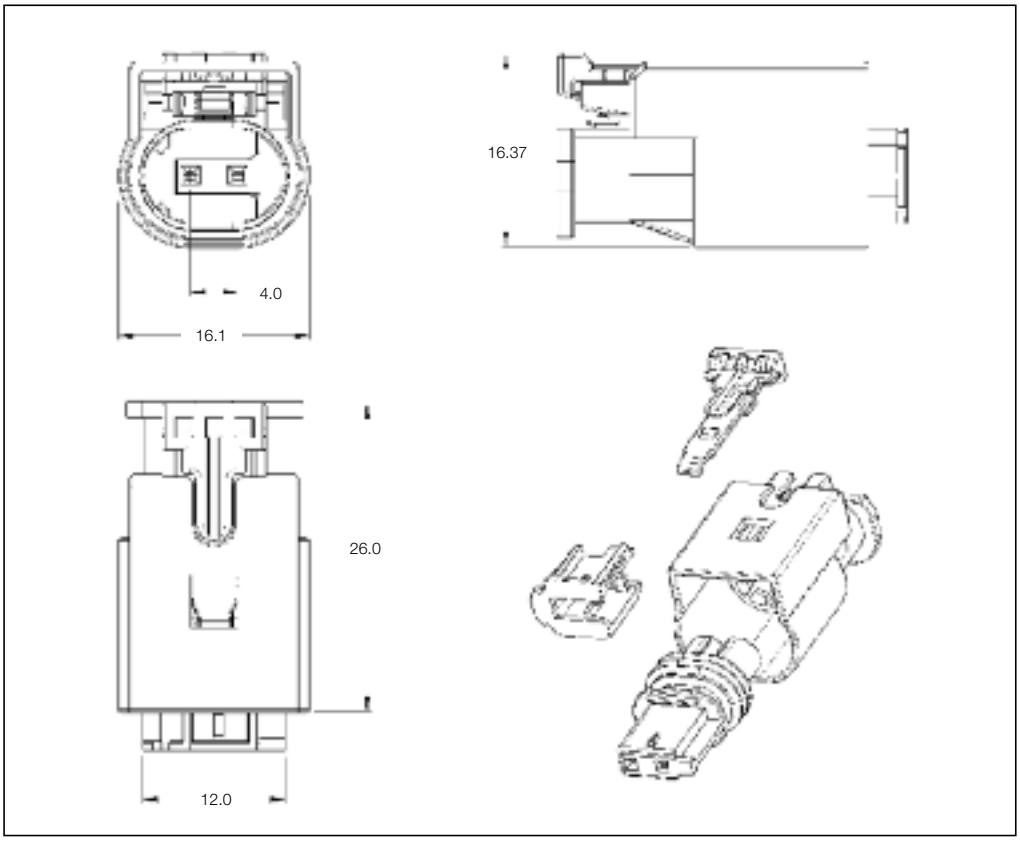

2 Position Receptacle Housing

No. of Pos.	Keying Options	Housing Color	Part Numbers						
			Receptacle Housing	Cover	Lever	Retainer Housing	Mating Pin Housing	Mating PCB Header Right-Angle	Mating PCB Header Vertical
2	A	Black	1-1418463-9	–	–	–	1-967570-1	–	–

Mating Pin Housing
See Page 6-9

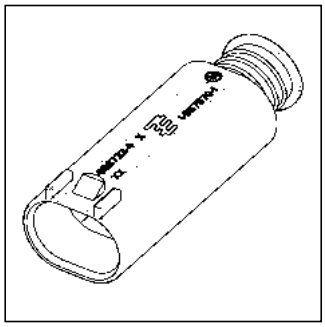

Receptacle Housings

Technical Features

No. of Positions:
2 Positions

Housing Material:
PBT GF15

Wire Size Range:
0.2–0.75 mm^2

Product Specification:
108-18272-0

Application Specification:
114-18061

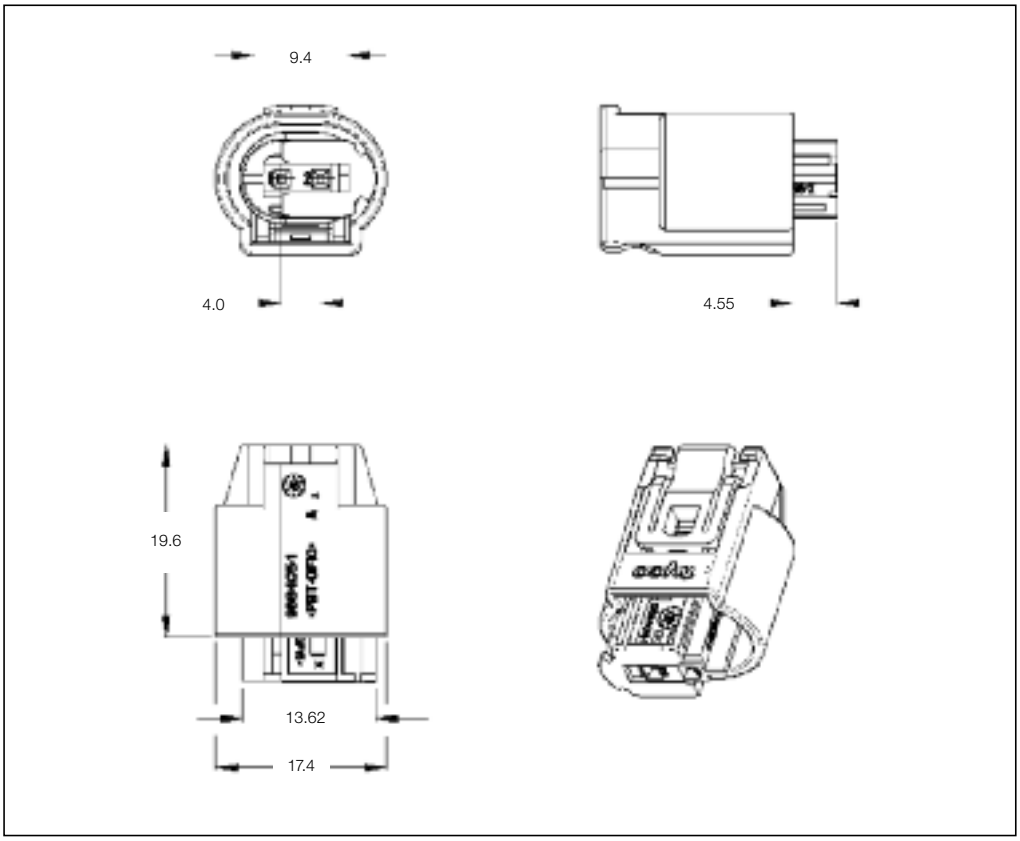

2 Position Receptacle Housings

No. of Pos.	Keying Options	Housing Color	Part Numbers							
			Receptacle Housing	Cover	Locking Device	Cover and Lever	Retainer Housing	Mating Pin Housing	Mating PCB Header Right-Angle	Mating PCB Header Vertical
2	A	Black	1-967644-1	–	–	–	–	–	–	–
	B	Gray	2-967644-1							
	C	Green	3-967644-1							
	A	Yellow	7-967644-3							

All specifications subject to change. Consult TE Connectivity for latest specifications.

Receptacle Housings

Technical Features

No. of Positions:
2 Positions

Housing Material:
PA66 GF

Wire Size Range:
0.35–0.75 mm^2

Product Specification:
108-20234

Application Specification:
411-20066

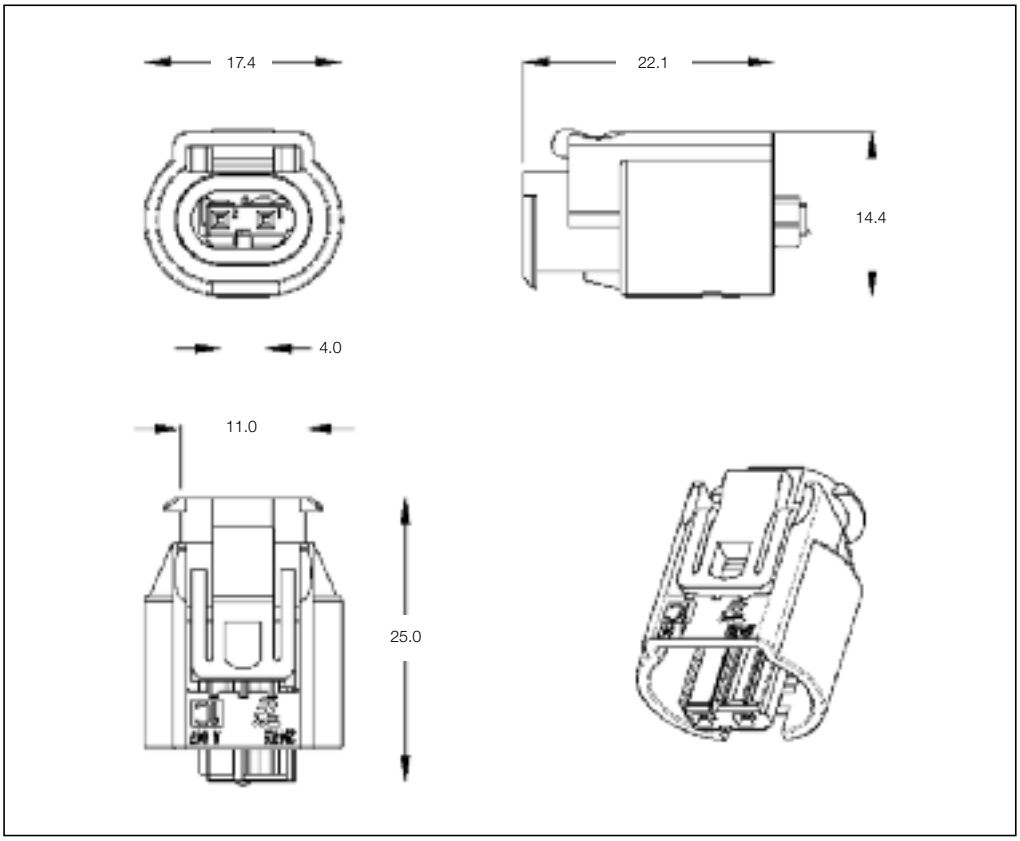

2 Position Receptacle Housing

No. of Pos.	Keying Options	Housing Color	Part Numbers							
			Receptacle Housing	Cover	Locking Device	Cover and Lever	Retainer Housing	Mating Pin Housing	Mating PCB Header Right-Angle	Mating PCB Header Vertical
2	A	Black	284703-1	–	–	–	–	–	–	–

Receptacle Housings

Technical Features

No. of Positions:
2 Position Assembly

Housing Material:
PBT GF20

Wire Size Range:
0.20 – 0.75 mm^2

Product Specification:
108-15200

Application Specification:
411-15612

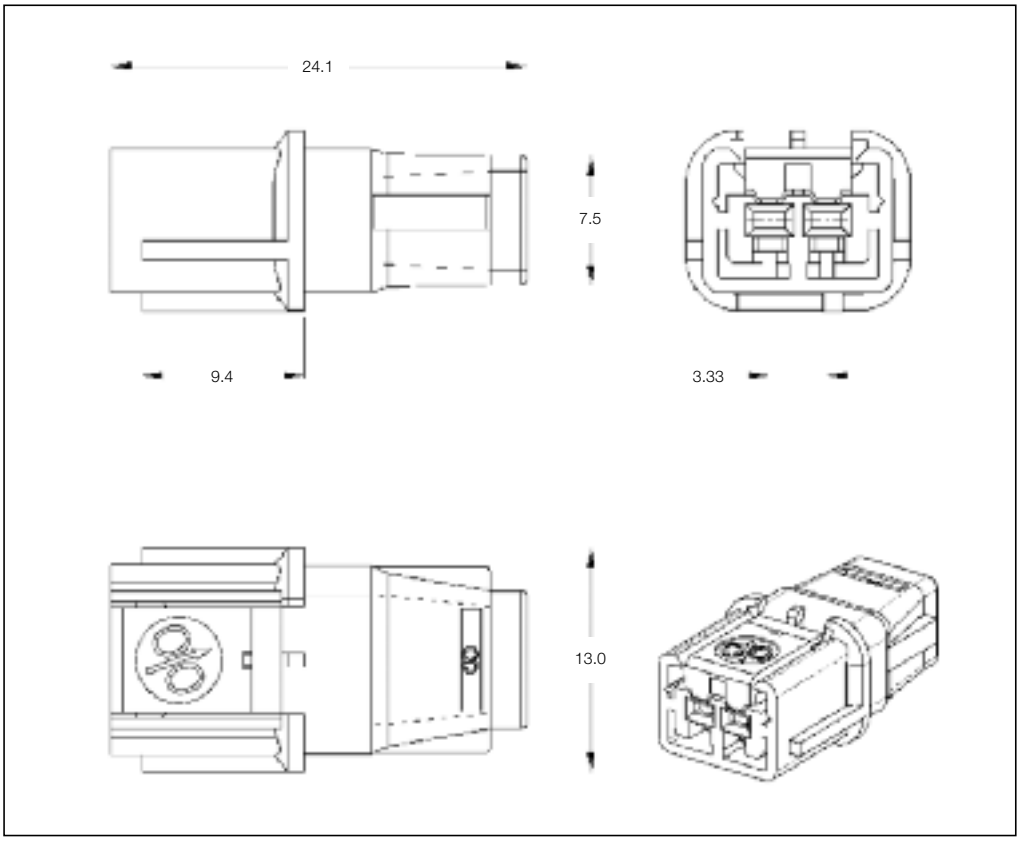

2 Position Receptacle Housings Long Version

No. of Pos.	Keying Options	Housing Color	Part Numbers						
			Receptacle Housing	Cover	Lever	Retainer Housing	Mating Pin Housing	Mating PCB Header Right-Angle	Mating PCB Header Vertical
2	See customer drawing	See customer drawing	953512-1/-9	–	–	–	–	–	–

All specifications subject to change. Consult TE Connectivity for latest specifications.

Pin Housings

Technical Features

No. of Positions:
2 Positions

Housing Material:
PBT GF20

Wire Size Range:
0.20 – 0.75 mm^2

Product Specification:
108-18659-1

Application Specification:
—

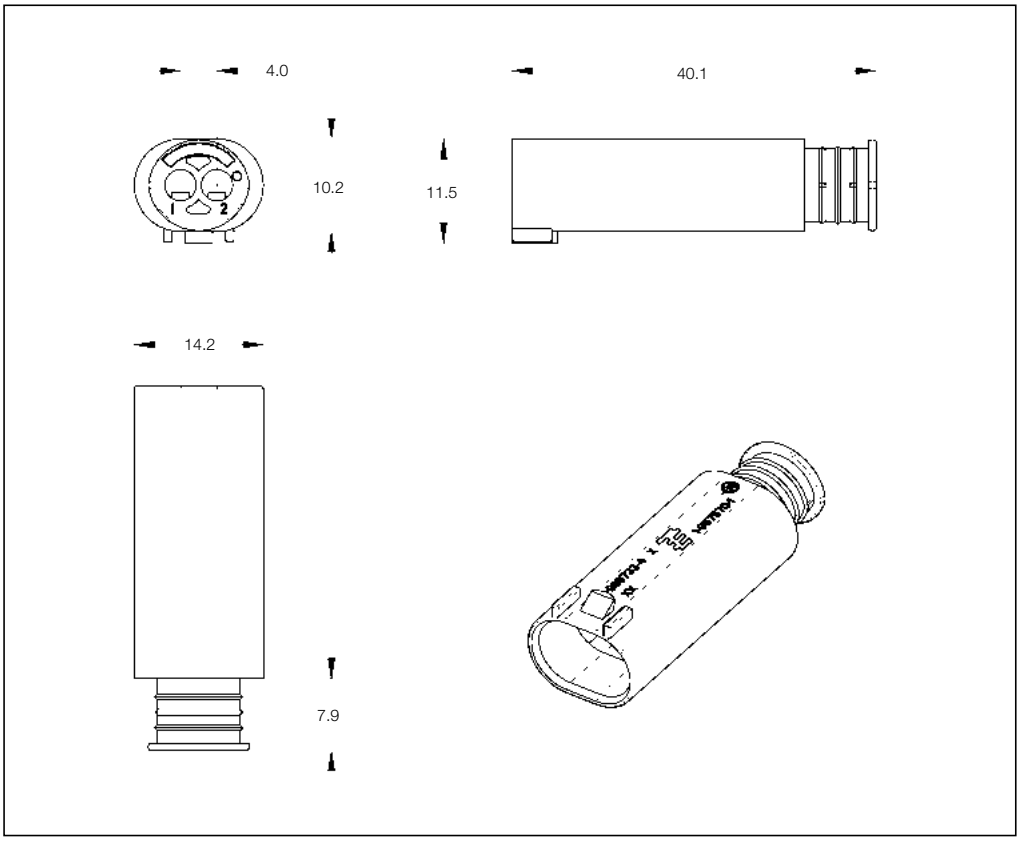

2 Position Pin Housings

No. of Pos.	Keying Options	Housing Color	Part Numbers				
			Pin Housing	Cover	Lever	Retainer Housing	Mating Receptacle Housing
2	A	Black	1-967570-1	–	–	–	1-1418463-9
		Yellow	7-967570-3				

Mating Receptacle Housing
See Page 6-5

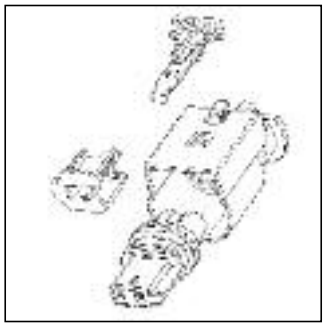

Receptacle Housings

Technical Features

No. of Positions:
3 Positions

Housing Material:
PBT GF15

Wire Size Range:
0.75 mm^2 Max.

Product Specification:
108-18272-0

Application Specification:
114-18061

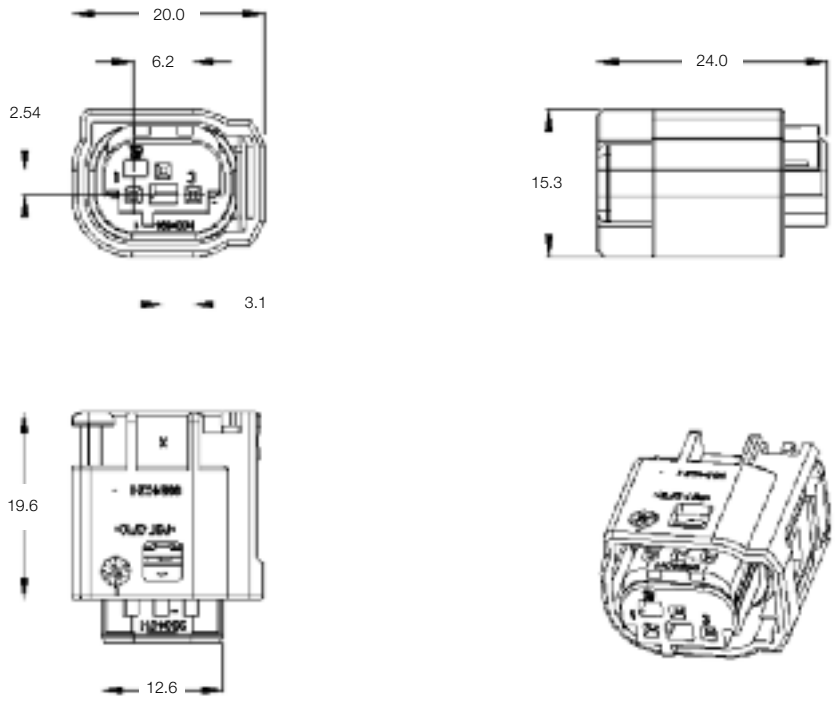

3 Position Receptacle Housings

No. of Pos.	Keying Options	Housing Color	Part Numbers							
			Receptacle Housing	Cover	Locking Device	Cover and Lever	Retainer Housing	Mating Pin Housing	Mating PCB Header Right-Angle	Mating PCB Header Vertical
3	A	Black	1-967642-1	–	–	–	–	–	–	–
	B	Gray	2-967642-1							
	B	Gray	2-967642-2							
	E	Brown	5-967642-1							

All specifications subject to change. Consult TE Connectivity for latest specifications.

Receptacle Housings

Technical Features

No. of Positions:
3 Position Assembly

Housing Material:
PBT GF20

Wire Size Range:
0.20 – 0.75 mm^2

Product Specification:
108-15200

Application Specification:
—

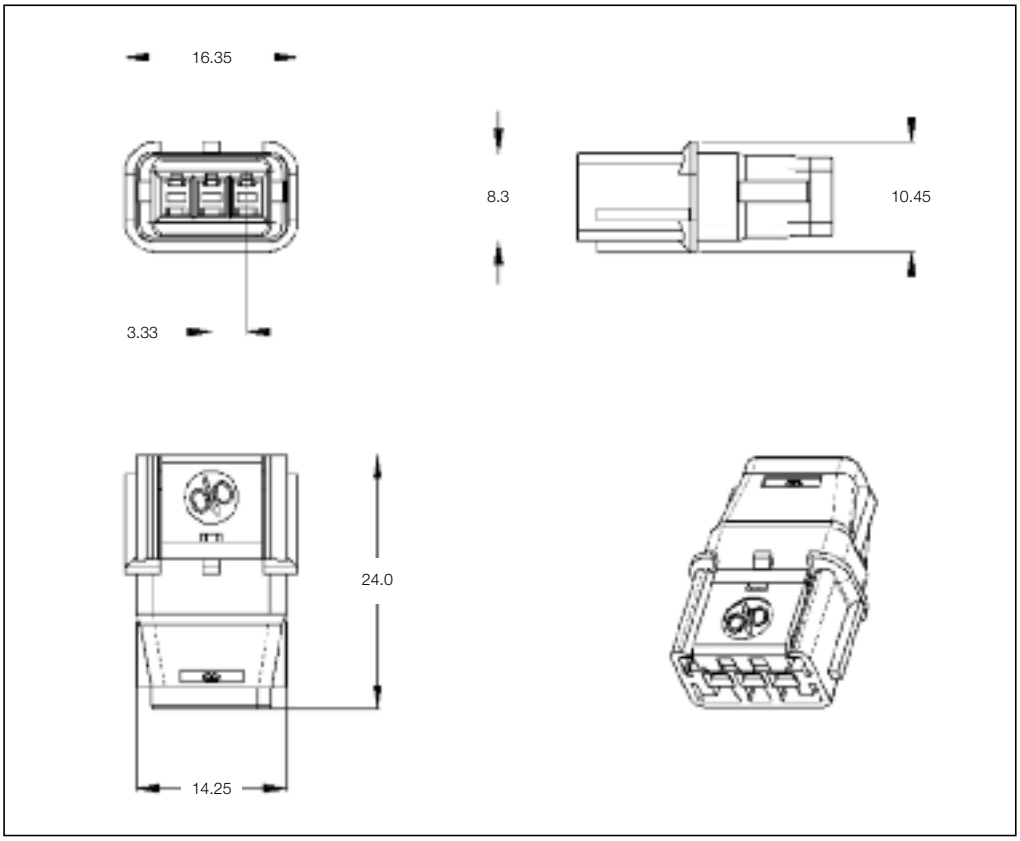

3 Position Receptacle Housings Short Version

No. of Pos.	Keying Options	Housing Color	Part Numbers						
			Receptacle Housing	Cover	Lever	Retainer Housing	Mating Pin Housing	Mating PCB Header Right-Angle	Mating PCB Header Vertical
3	See customer drawing	See customer drawing	953520-1/-8	–	–	–	–	–	–

Receptacle Housings

Technical Features

No. of Positions:
3 Positions

Housing Material:
PBT GF15

Wire Size Range:
0.20 – 0.75 mm^2

Product Specification:
108-18272

Application Specification:
114-18025

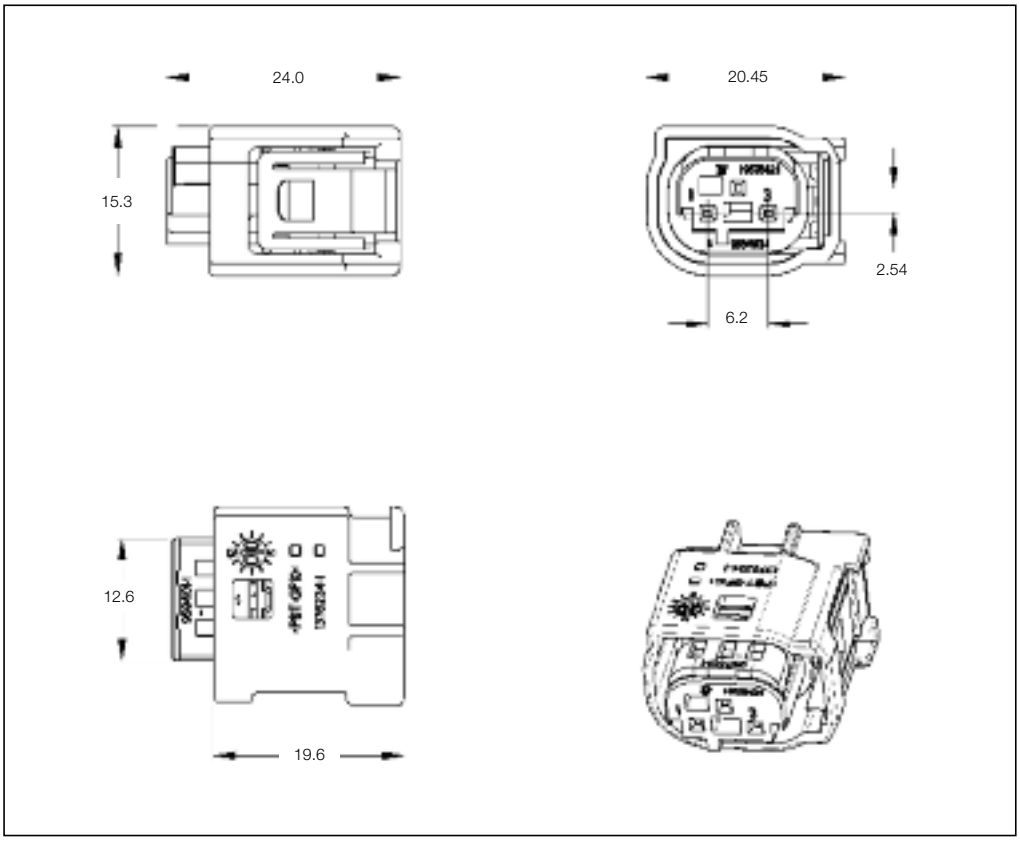

3 Position Receptacle Housings

No. of Pos.	Keying Options	Housing Color	Part Numbers						
			Receptacle Housing	Cover	Lever	Retainer Housing	Mating Pin Housing	Mating PCB Header Right-Angle	Mating PCB Header Vertical
3	A	Black	1376235-1	1376234-1	–	–	–	–	–
	B	Gray	1376235-2	–					

All specifications subject to change. Consult TE Connectivity for latest specifications.

Receptacle Housings

Technical Features

No. of Positions:
3 Positions MQS

Housing Material:
PBT GF10

Wire Size Range:
0.22 – 0.75 mm^2

Product Specification:
108-15286

Application Specification:
411-15670

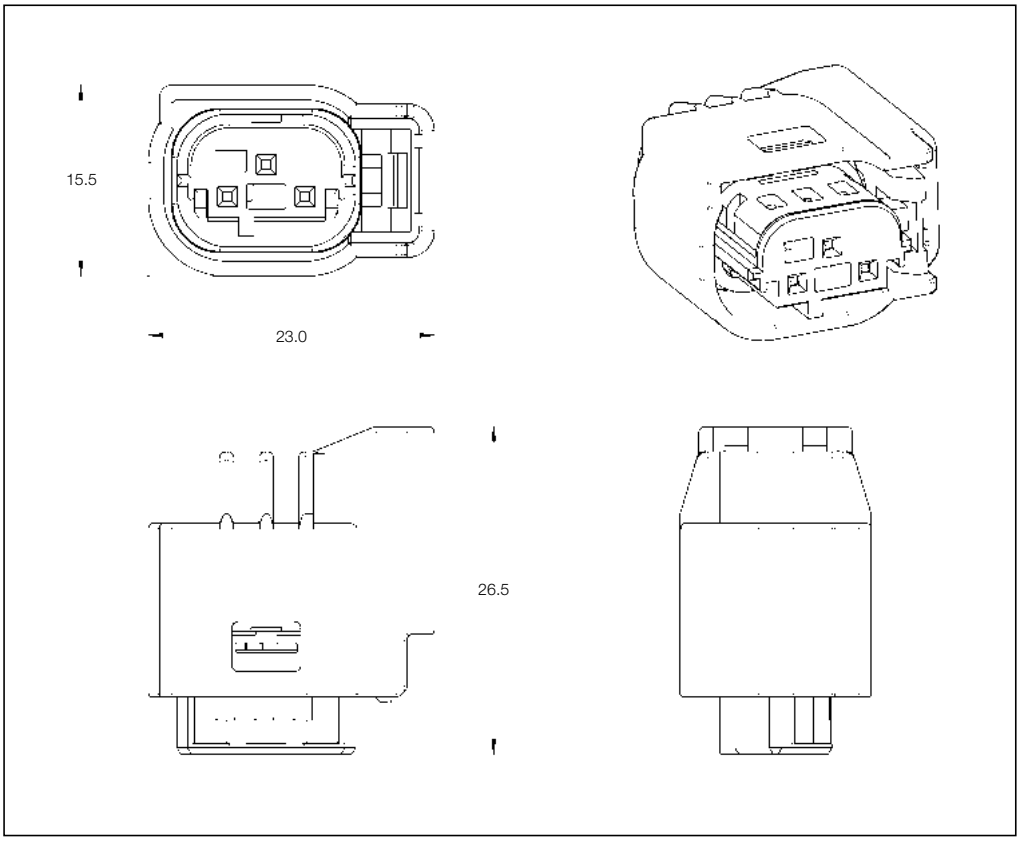

3 Position Receptacle Housings

No. of Pos.	Keying Options	Housing Color	Part Numbers						
			Receptacle Housing	Cover	Lever	Retainer Housing	Mating Pin Housing	Mating PCB Header Right-Angle	Mating PCB Header Vertical
3	A	Black	1379729-1	–	–	–	–	–	–
	B	Gray	1379729-2						

Receptacle Housings

Technical Features

No. of Positions:
4 Positions

Housing Material:
PBT GF15

Wire Size Range:
0.75 mm^2 Max.

Product Specification:
108-18272-0

Application Specification:
114-18061

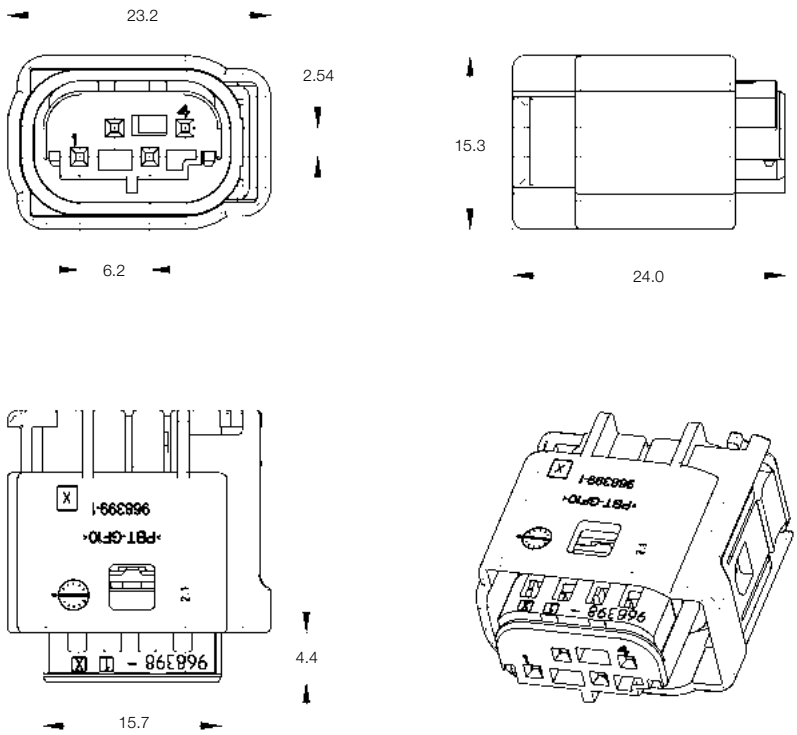

4 Position Receptacle Housings

No. of Pos.	Keying Options	Housing Color	Part Numbers							
			Receptacle Housing	Cover	Locking Device	Cover and Lever	Retainer Housing	Mating Pin Housing	Mating PCB Header Right-Angle	Mating PCB Header Vertical
4	A	Black	1-967640-1	–	–	–	–	1-967584-1	1-967657-1	967439-1
	B	Gray	2-967640-1							

Mating Pin Housing
See Page 6-16–6-17

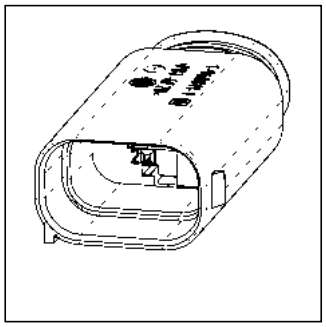

Mating Header
See Page 6-18–6-19

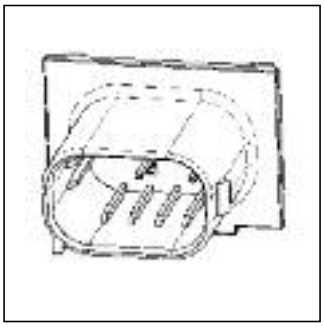

All specifications subject to change. Consult TE Connectivity for latest specifications.

Receptacle Housings

Technical Features

No. of Positions:
4 Positions Positive Mate

Housing Material:
PBT GF

Wire Size Range:
0.22 – 0.75 mm^2

Product Specification:
108-15286

Application Specification:
411-15670

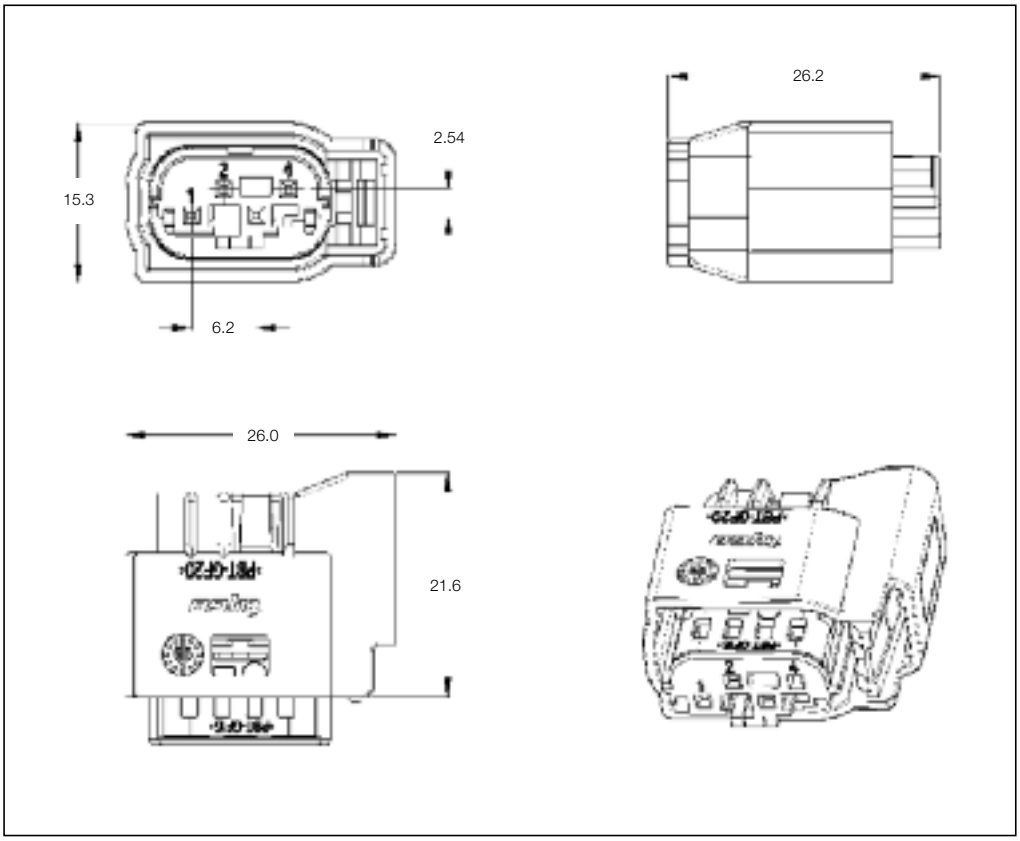

4 Position Receptacle Housing

No. of Pos.	Keying Options	Housing Color	Part Numbers						
			Receptacle Housing	Cover	Lever	Retainer Housing	Mating Pin Housing	Mating PCB Header Right-Angle	Mating PCB Header Vertical
4	A	Black	1379799-1	–	–	–	1-967584-1	967657-1	967439-1
	B	Gray	1379799-2				–	–	–

Pin Housings

Technical Features

No. of Positions:
4 Positions

Housing Material:
PBT GF20

Wire Size Range:
0.35–0.75 mm^2

Product Specification:
108-18569-0

Application Specification:
114-18061

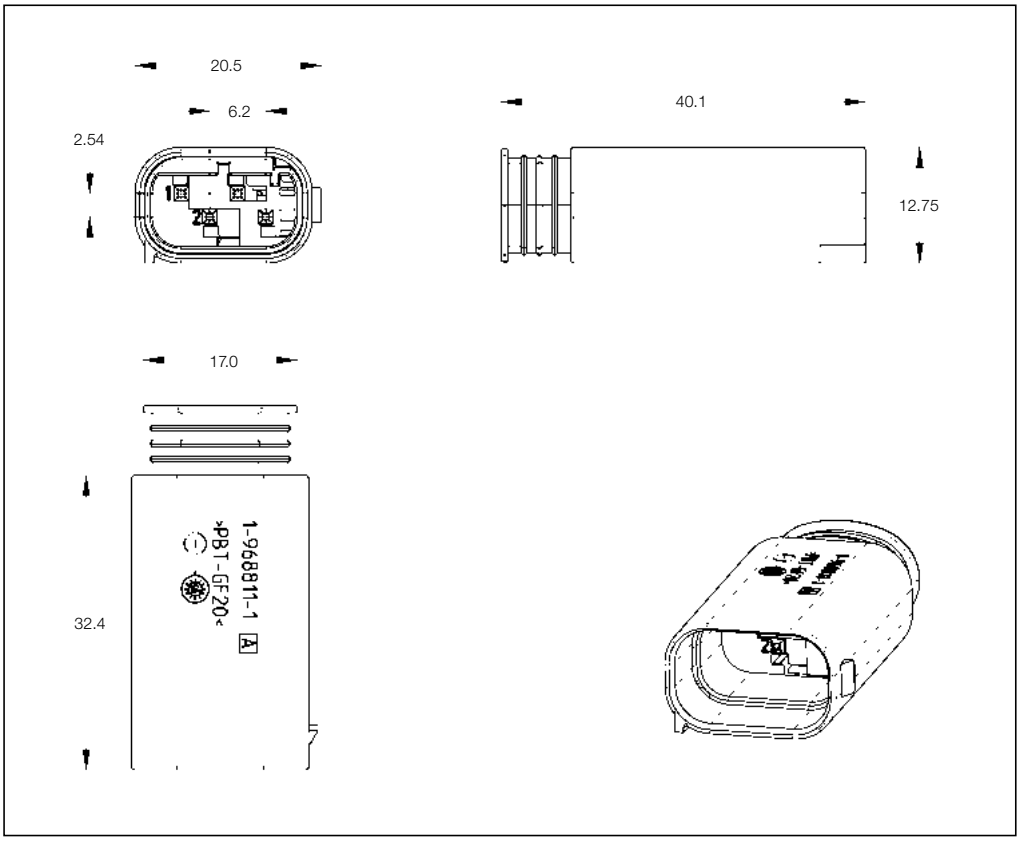

4 Position Pin Housings

No. of Pos.	Keying Options	Housing Color	Part Numbers					
			Pin Housing	Cover	Locking Device	Cover and Lever	Retainer Housing	Mating Receptacle Housing
4	A	Black	1-967584-1	–	–	–	–	1-967640-1
			1-967584-3					
		Yellow	7-967584-3	–	–	–	–	7-967640-3

Mating Receptacle Housing
See Page 6-14

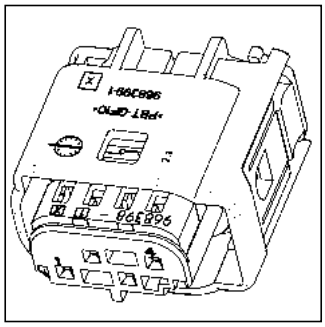

All specifications subject to change. Consult TE Connectivity for latest specifications.

Pin Housings

Technical Features

No. of Positions:
4 Positions

Housing Material:
PBT GF10

Wire Size Range:
0.20 – 0.75 mm^2

Product Specification:
—

Application Specification:
—

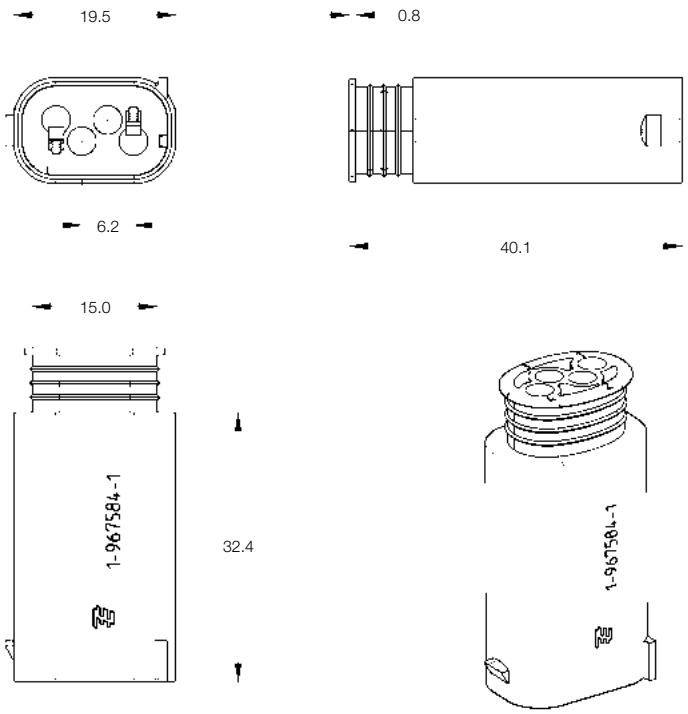

4 Position Pin Housing

No. of Pos.	Keying Options	Housing Color	Part Numbers				
			Pin Housing	Cover	Lever	Retainer Housing	Mating Receptacle Housing
4	–	Black	1-968811-4	–	–	–	1-967640-1

Mating Receptacle Housing
See Page 6-14

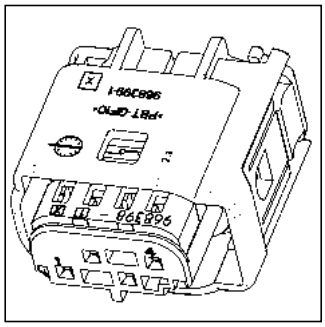

Printed Circuit Board Headers

Technical Features

No. of Positions:
4 Position Assembly

Housing Material:
PBT GF30

Material and Finish:
CuSn, pre-tin plated

Product Specification:
108-18030

Application Specification:
114-18021

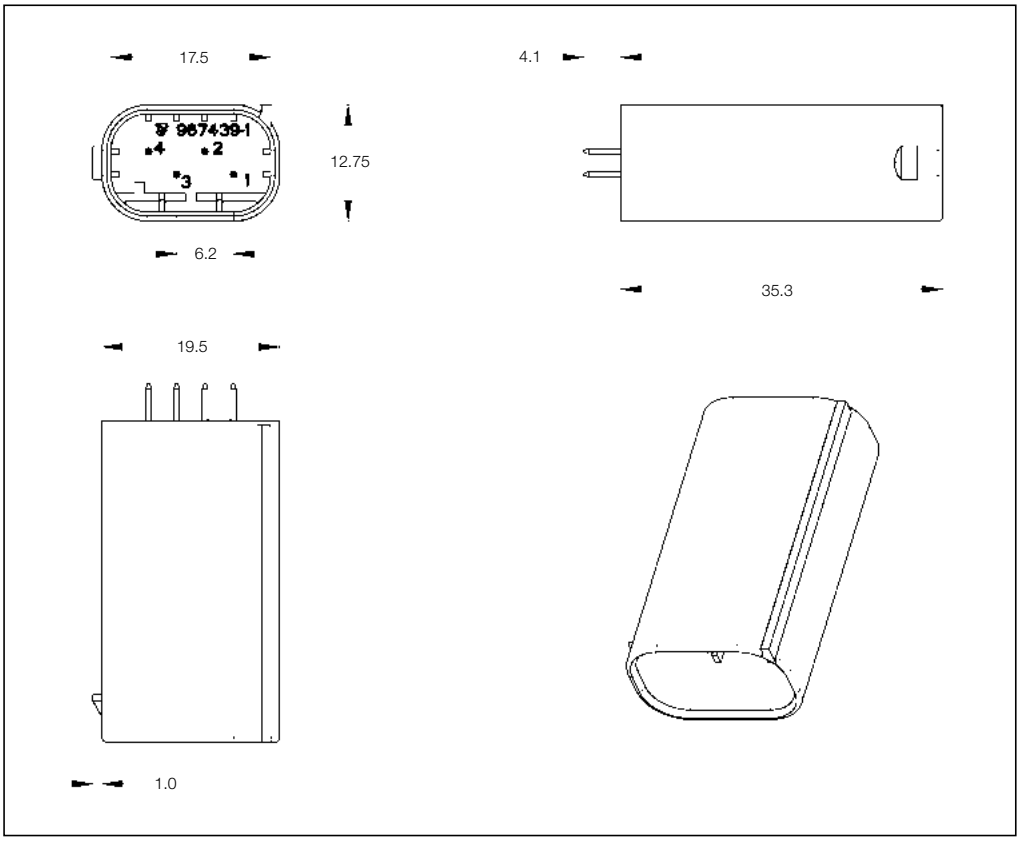

4 Position PCB Header

No. of Pos.	Keying Options	Housing Color	Part Numbers					
			PCB Header Right-Angle	PCB Header Vertical	Cover	Cover and Lever	Retainer Housing	Mating Receptacle Housing
4	–	Black	–	967439-1	–	–	–	1-967640-1

Mating Receptacle Housing
See Page 6-14

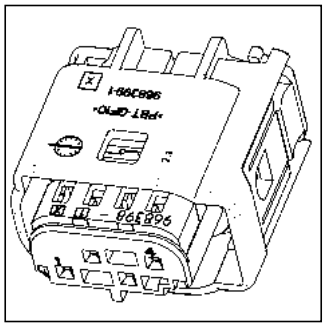

All specifications subject to change. Consult TE Connectivity for latest specifications.

Printed Circuit Board Headers

Technical Features

No. of Positions:
4 Positions

Housing Material:
PBT GF20

Material and Finish:
CuFe, tin plated

Product Specification:
108-18568

Application Specification:
—

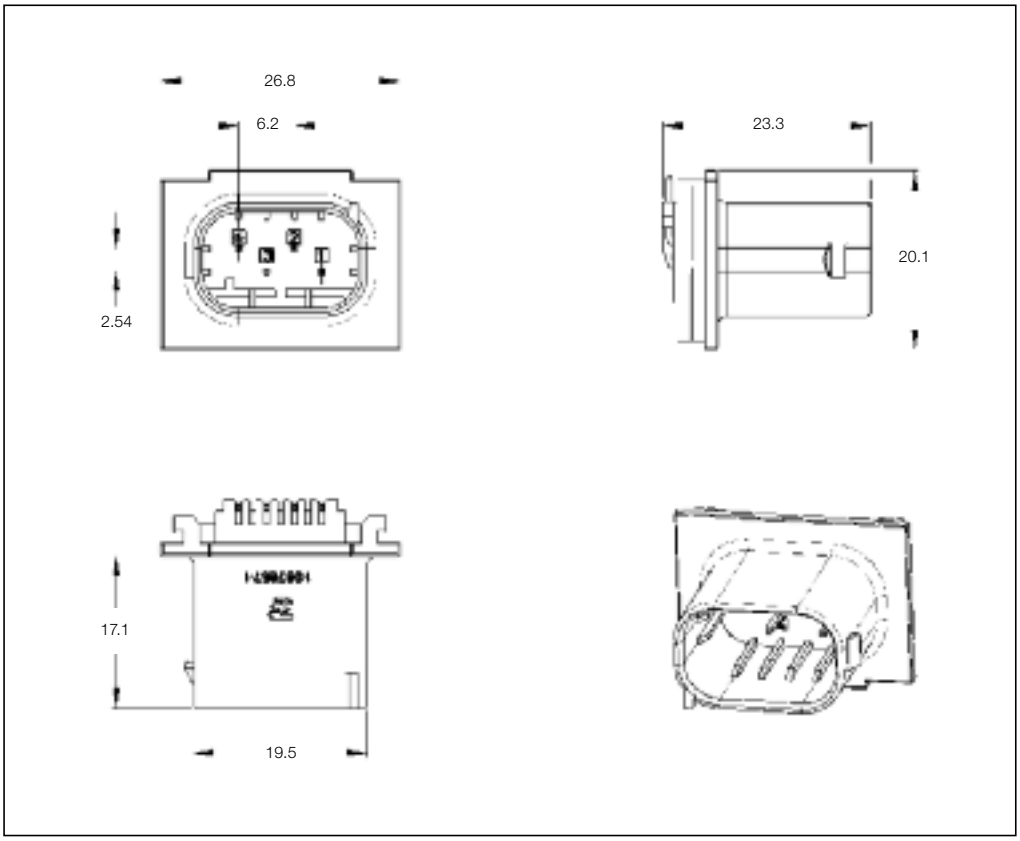

4 Position Pin Housing

No. of Pos.	Keying Options	Housing Color	Part Numbers					
			Pin Housing	Cover	Locking Device	Cover and Lever	Retainer Housing	Mating Receptacle Housing
4	–	Black	1-967657-1	–	–	–	–	1-967640-1

Mating Receptacle Housing
See Page 6-14

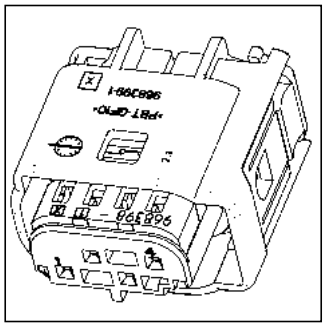

Receptacle Housings

Technical Features

No. of Positions:
6 Positions

Housing Material:
PBT GF15

Wire Size Range:
0.75 mm^2 Max.

Product Specification:
108-18272-0

Application Specification:
114-18061

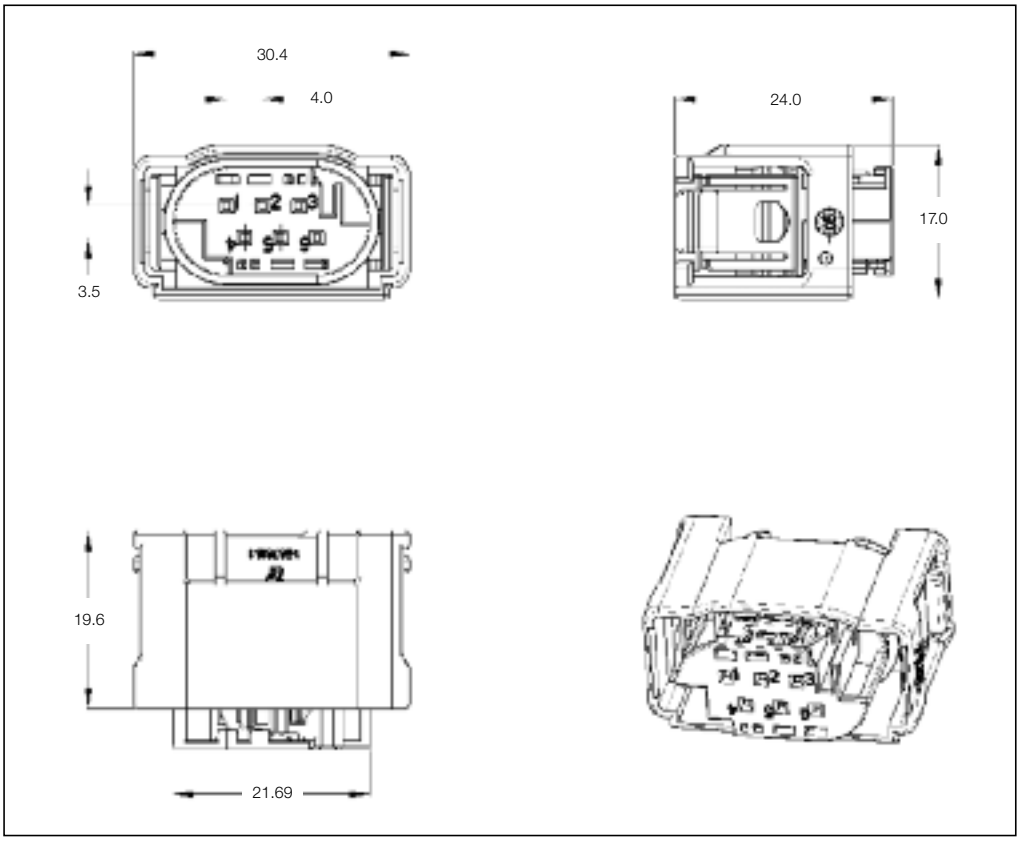

6 Position Receptacle Housings

No. of Pos.	Keying Options	Housing Color	Part Numbers							
			Receptacle Housing	Cover	Locking Device	Cover and Lever	Retainer Housing	Mating Pin Housing	Mating PCB Header Right-Angle	Mating PCB Header Vertical
6	A	Black	1-967616-1	–	–	–	–	1-967587-3	–	–
	A	Black	1-967616-2							
	B	Gray	2-967616-1							
	C	Blue	3-967616-1							

Mating Header
See Page 6-22

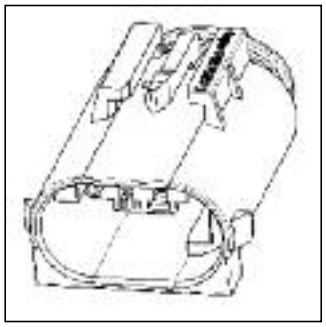

All specifications subject to change. Consult TE Connectivity for latest specifications.

Receptacle Housings

Technical Features

No. of Positions:
6 Position Assembly

Housing Material:
PBT GF15

Wire Size Range:
0.20 – 0.75 mm^2

Product Specification:
108-18272-0

Application Specification:
114-18061

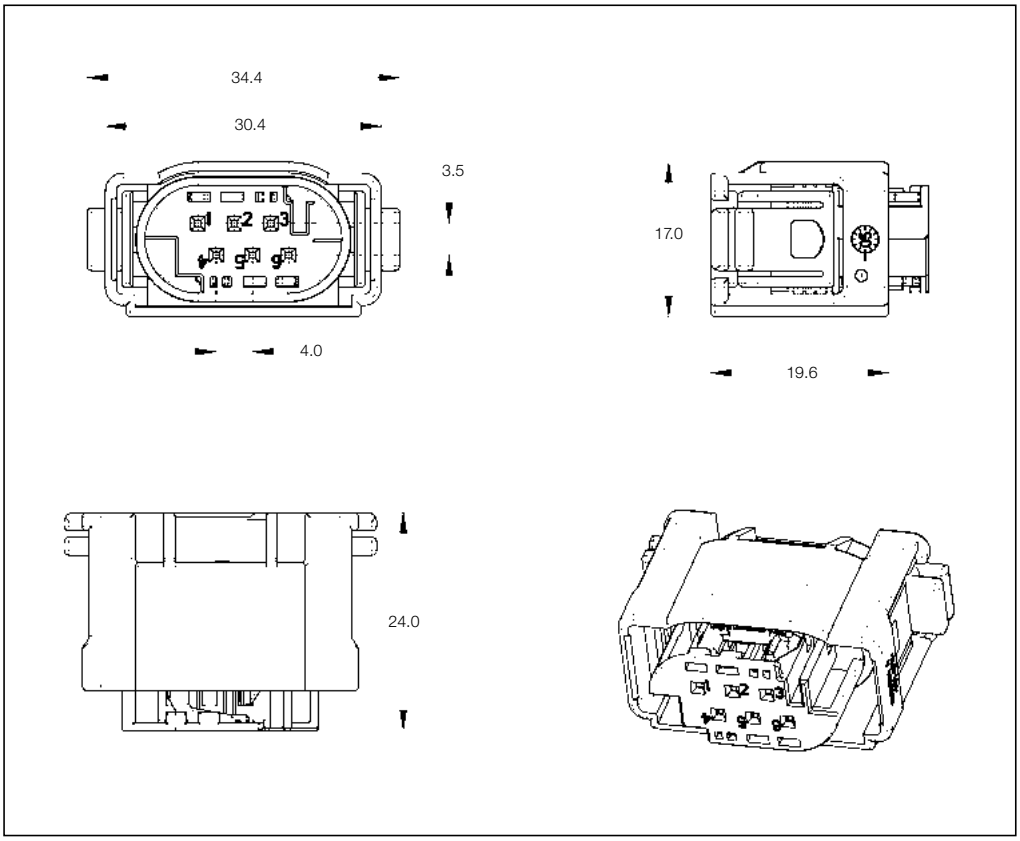

6 Position Receptacle Housings

No. of Pos.	Keying Options	Housing Color	Part Numbers						
			Receptacle Housing	Cover	Lever	Retainer Housing	Mating Pin Housing	Mating PCB Header Right-Angle	Mating PCB Header Vertical
6	A	Black	1563872-1	–	–	–	1-967361-3	–	–
	B	Gray	1563872-2				2-967361-3		
	C	Blue	1563872-3				–		
	A	Black	1-1563872-1*				1-967361-3		

*Cavity 2, 3 and 6 are blanked.

Pin Housings

Technical Features

No. of Positions:
6 Positions

Housing Material:
PBT GF20

Wire Size Range:
0.35–0.75 mm²

Product Specification:
108-18569-0

Application Specification:
114-18061

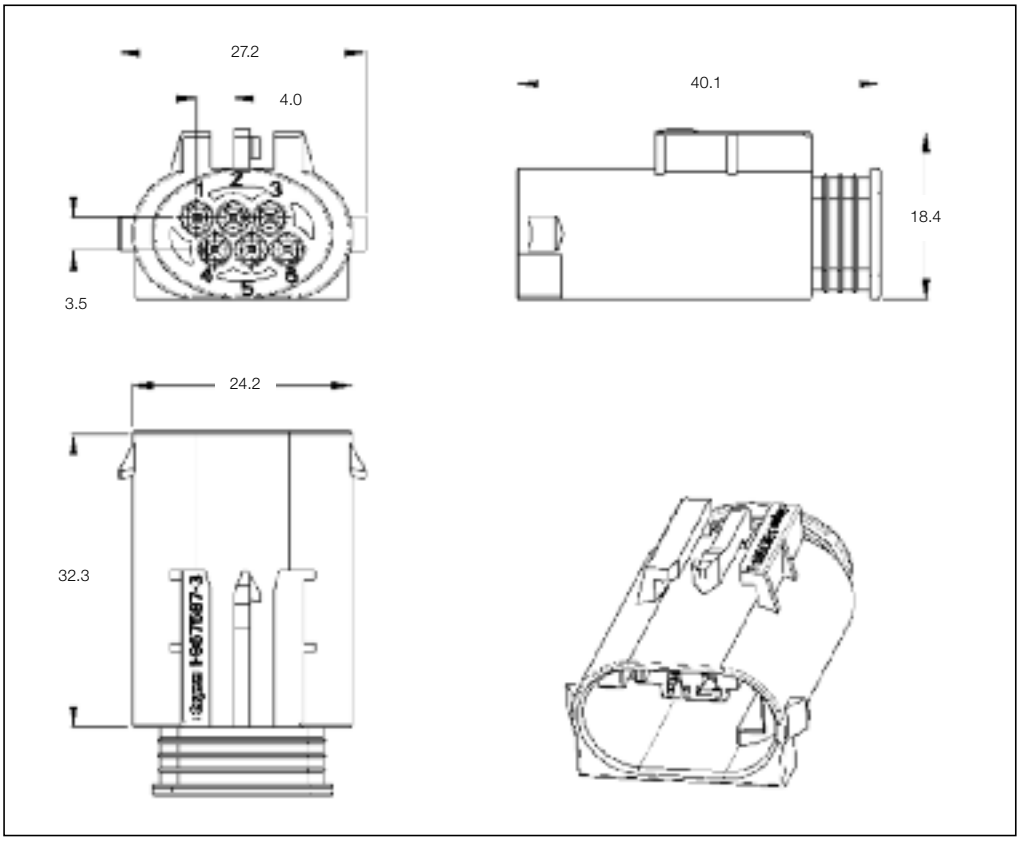

6 Position Pin Housings

No. of Pos.	Keying Options	Housing Color	Part Numbers					
			Pin Housing	Cover	Locking Device	Cover and Lever	Retainer Housing	Mating Receptacle Housing
6	A	Black	1-967587-3	–	–	–	–	1-967616-3
	B	Natural	2-967587-3					
		Black	6-967587-3					
		Yellow	7-967587-3					

Mating Receptacle Housing
See Page 6-20

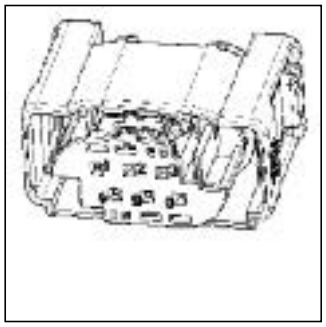

All specifications subject to change. Consult TE Connectivity for latest specifications.

Receptacle Housings

Technical Features

No. of Positions:
8 Positions

Housing Material:
PBT GF15

Wire Size Range:
0.20–0.75 mm^2

Product Specification:
—

Application Specification:
—

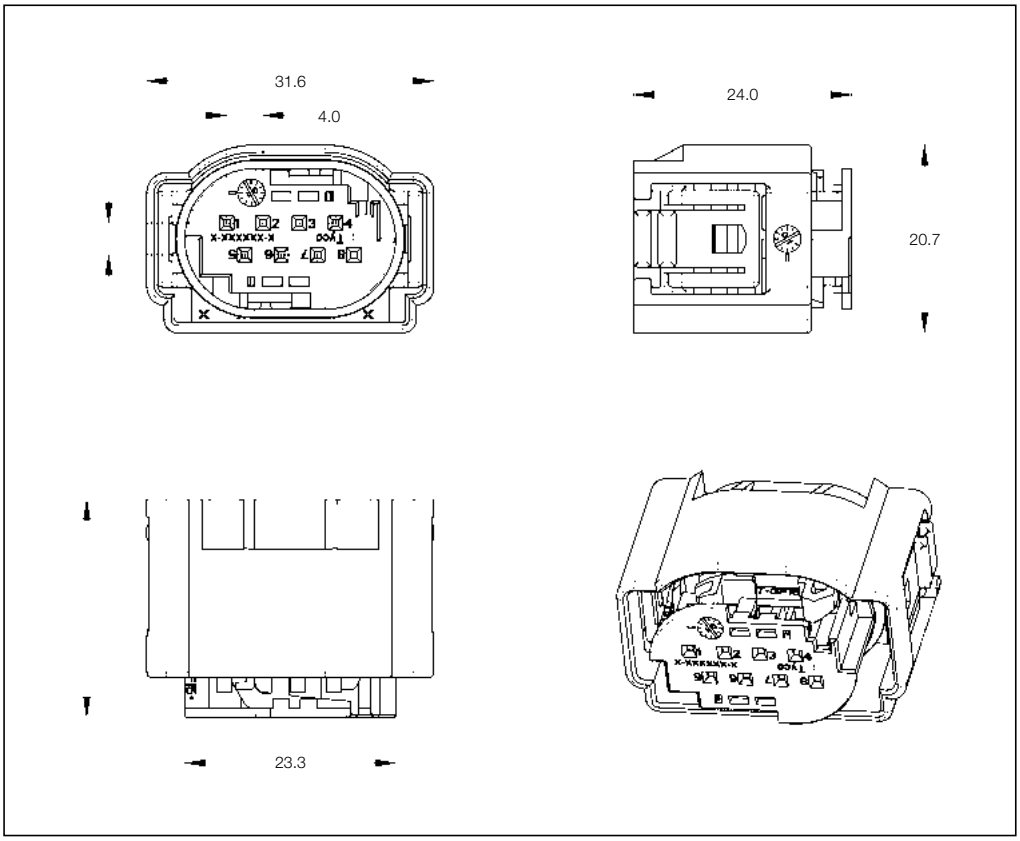

8 Position Receptacle Housings

No. of Pos.	Keying Options	Housing Color	Part Numbers						
			Receptacle Housing	Cover	Lever	Retainer Housing	Mating Pin Housing	Mating PCB Header Right-Angle	Mating PCB Header Vertical
8	A	Black	1-1534229-1	–	–	–	–	–	–
	B	Gray	2-1534229-1						
	C	Brown	2-1534229-2*						

*Cavity 1, 4, 5 and 8 locked.

Engineering Notes

All specifications subject to change. Consult TE Connectivity for latest specifications.

Receptacle Housings

Technical Features

No. of Positions:
30 Position Hybrid MQS–MPQ

Housing Material:
PBT / Silicon

Wire Size Range:
MQS: 0.35–0.75 mm^2
MPQ: 1–4 mm^2

Product Specification:
108-15379

Application Specification:
411-15729

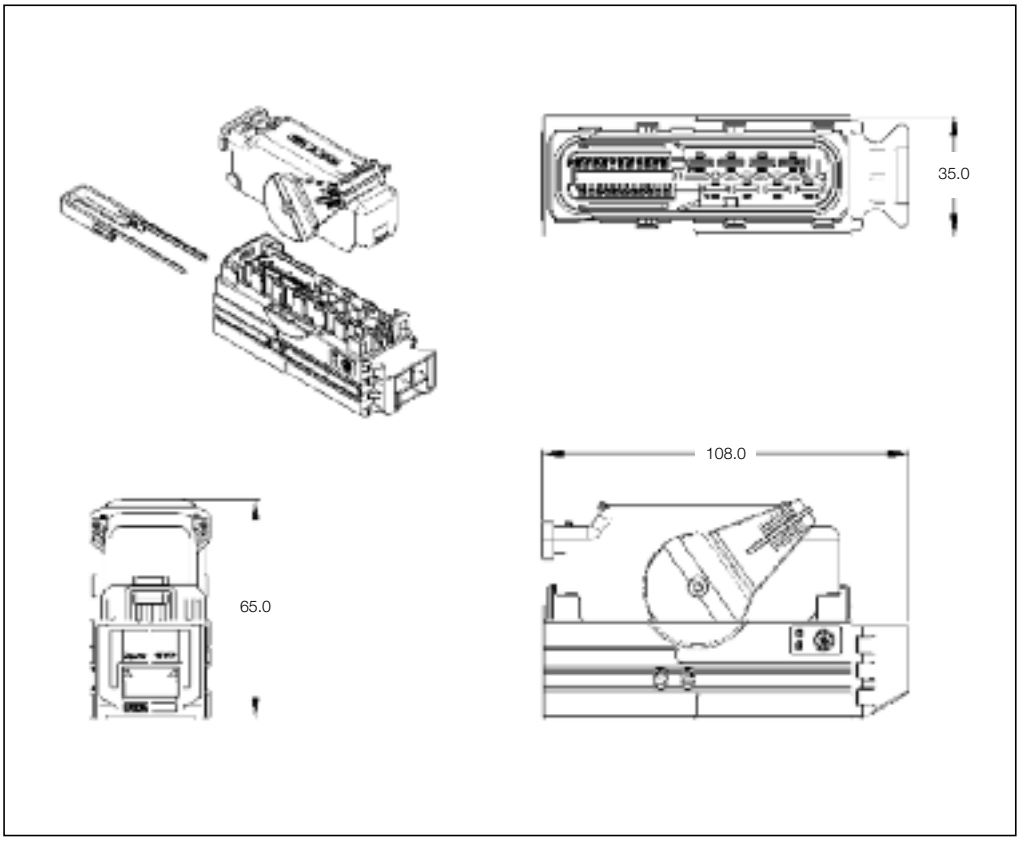

30 Position Receptacle Housings

No. of Pos.	Keying Options	Housing Color	Part Numbers						
			Receptacle Housing	Cover	Lever	Retainer Housing	Mating Pin Housing	Mating PCB Header Right-Angle	Mating PCB Header Vertical
30	A	Black	1801263-1	1801269-2	–	1801268-1	–	1452999-1	–
			1-1801263-1*	1801269-1					

*) •: 1801263-1: only cavities 1, 2, 3, 4, 5, 6, 7, 21 & 23 are blocked up.
•: 1-1801263-1: all cavities are opened.

Receptacle Housings

Technical Features

No. of Positions:
40 Position Assembly

Housing Material:
PBT GF20

Wire Size Range:
- 0.5–2.5 mm^2
  Junior Power Timer
- 0.5–0.75 mm^2
  MQS

Product Specification:
108-61036

Application Specification:
114-18021-1

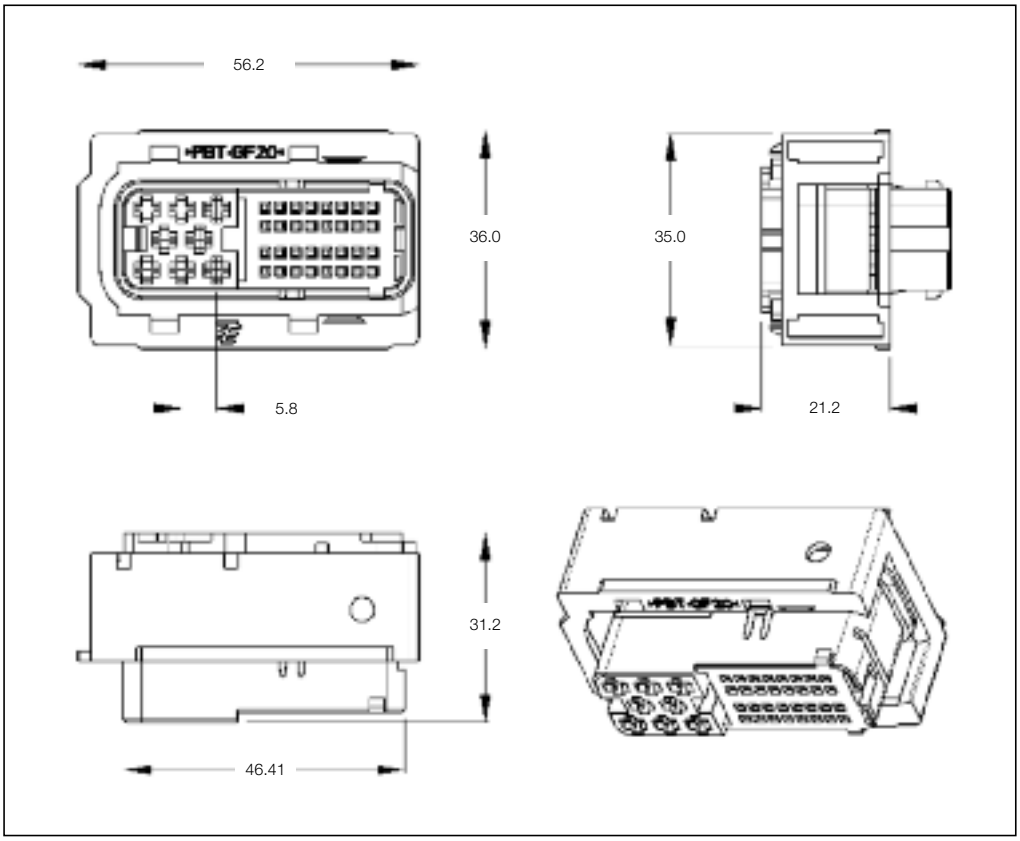

40 Position Pin Housing

No. of Pos.	Keying Options	Housing Color	Part Numbers					
			Pin Housing	Cover	Locking Device	Cover and Lever	Retainer Housing	Mating Receptacle Housing
40	–	Black	368319-1	–	–	–	–	368322-1 (Type A) 368323-1 (Type B)

All specifications subject to change. Consult TE Connectivity for latest specifications.

Receptacle Housings

Technical Features

No. of Positions:
40 Position Assembly

Housing Material:
PBT GF

Wire Size Range:
- 0.2–0.75 mm^2 MQS
- 0.2–2.5 mm^2 Junior Power Timer

Product Specification:
108-5793

Application Specification:
411-78008

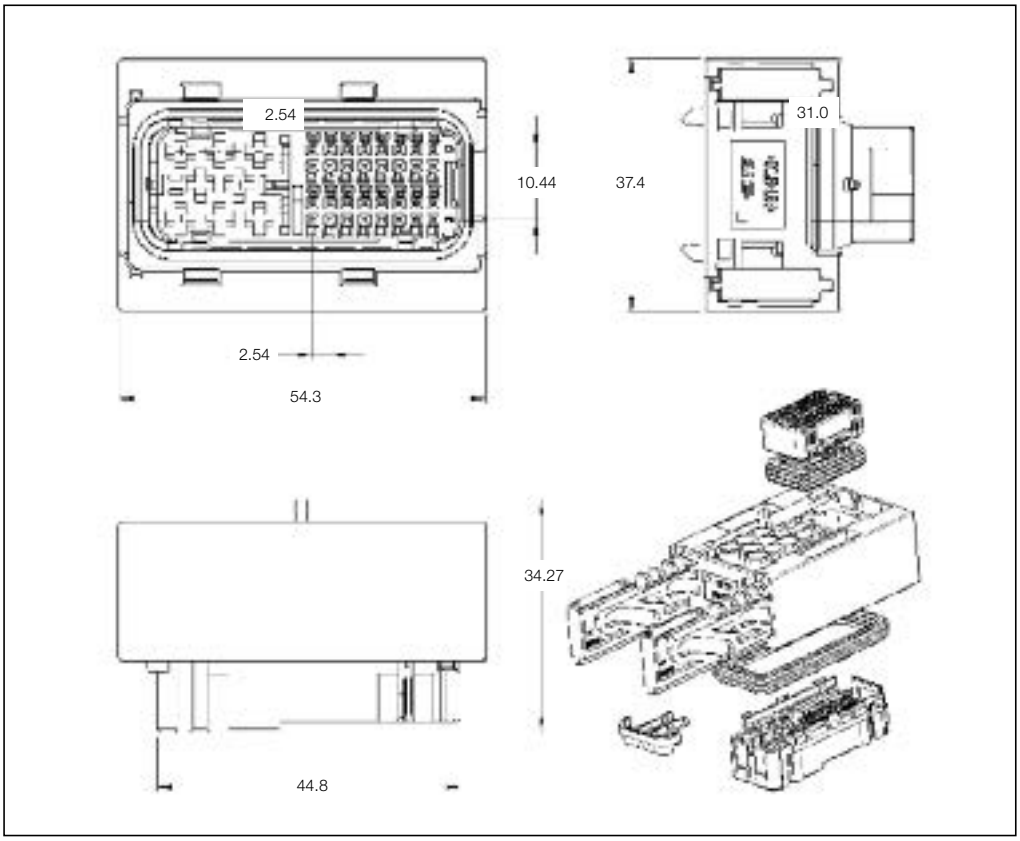

40 Position Receptacle Housing

No. of Pos.	Keying Options	Housing Color	Part Numbers							
			Receptacle Housing	Cover	Locking Device	Cover and Lever	Retainer Housing	Mating Pin Housing	Mating PCB Header Right-Angle	Mating PCB Header Vertical
40	–	–	1473252-1	–	–	1473255-1	368388-1	–	1241434-1	–

Receptacle Housings

Technical Features

No. of Positions:
40 Position Assembly

Housing Material:
PBT GF20

Wire Size Range:
- 0.5–2.5 mm^2
  Junior Power Timer
- 0.5–0.75 mm^2
  MQS

Product Specification:
108-61039

Application Specification:
114-18021-1

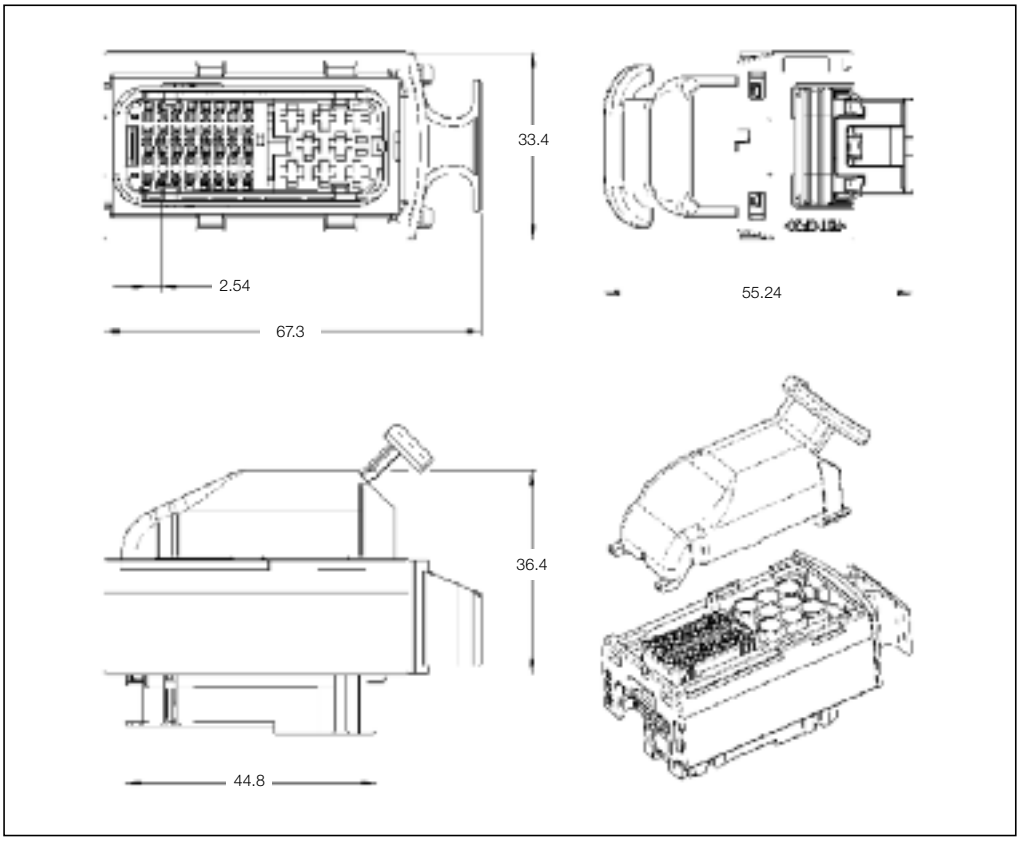

40 Position Receptacle Housings

No. of Pos.	Keying Options	Housing Color	Part Numbers							
			Receptacle Housing	Cover	Locking Device	Cover and Lever	Retainer	Mating Pin Housing	Mating PCB Header Right-Angle	Mating PCB Header Vertical
40	–	Black	368383-1	1743277-2	–	–	–	–	–	–
		Gray	368383-2							
		White	368383-3							
		Blue	368383-4							
		Yellow	–	–	–	–	368388-1	–	–	–

All specifications subject to change. Consult TE Connectivity for latest specifications.

Receptacle Housings

Technical Features

No. of Positions:
60 Position Assembly

Housing Material:
PA66 / PBT ASA GF

Wire Size Range:
- 0.35–0.75 mm² MQS Clean Body 0.63 mm
- 0.75–1.5 mm² MQS Clean Body 1.5 mm

Product Specification:
108-20235

Application Specification:
411-20067

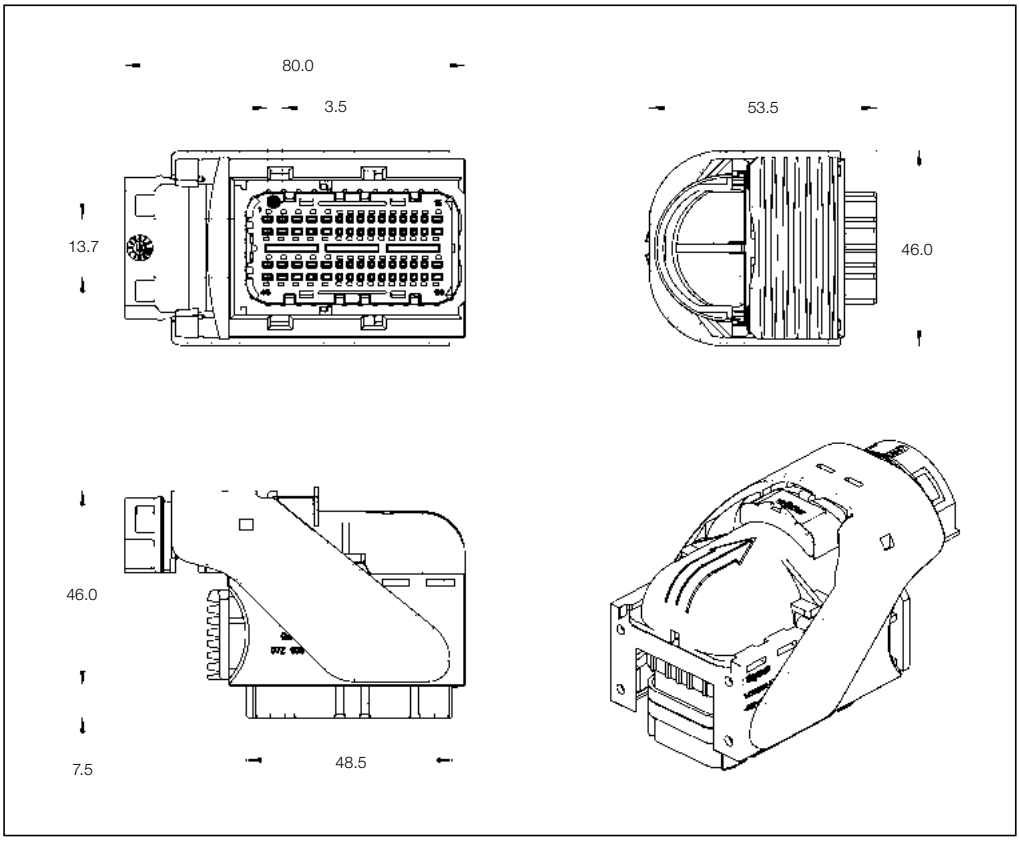

60 Position Receptacle Housings

No. of Pos.	Keying Options	Housing Color	Part Numbers							
			Receptacle Housing	Cover	Locking Device	Cover and Lever	Retainer Housing	Mating Pin Housing	Mating PCB Header Right-Angle	Mating PCB Header Vertical
60	–	Black / Light-Brown	284742-1	–	–	–	–	–	–	–
			284742-2*							

*) No C.P.A. supplied.

Receptacle Housings

Technical Features

No. of Positions:
60 Position Assembly

Housing Material:
PA66 GF30

Wire Size Range:
0.20–0.75 mm^2

Product Specification:
108-20235

Application Specification:
114-18598

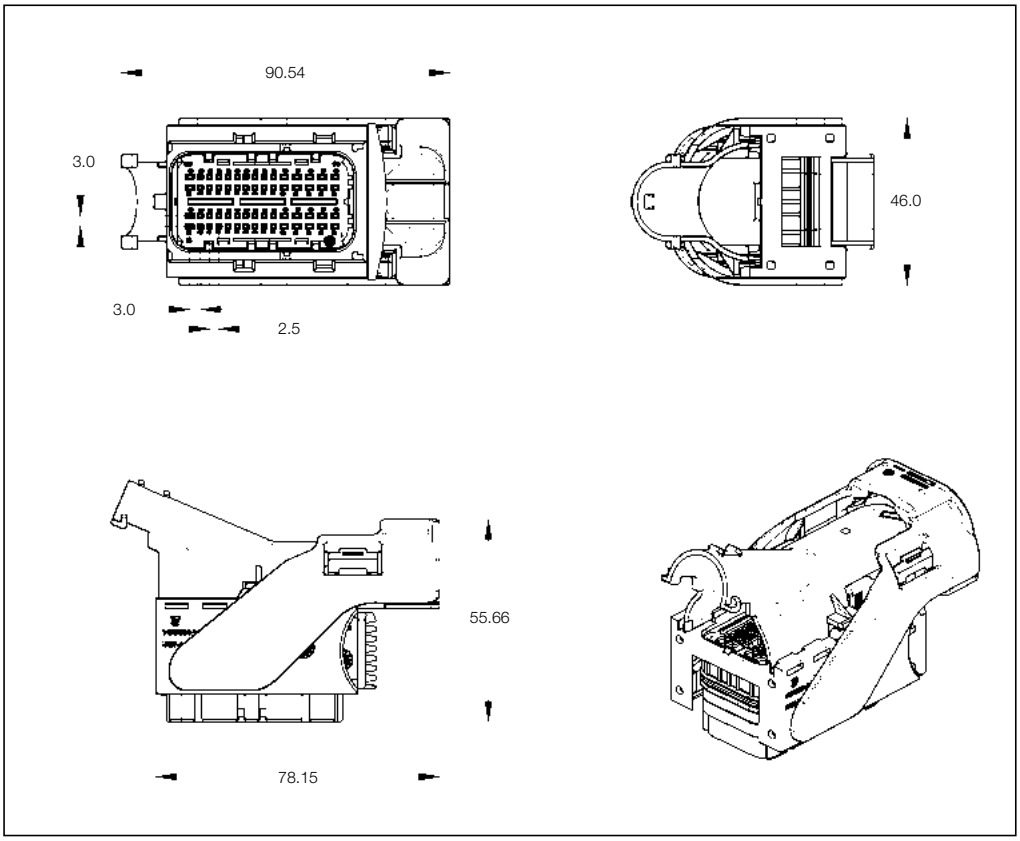

60 Position Receptacle Housings

No. of Pos.	Keying Options	Housing Color	Part Numbers						
			Receptacle Housing	Cover	Lever	Retainer Housing	Mating Pin Housing	Mating PCB Header Right-Angle	Mating PCB Header Vertical
60	–	Black	1745010-1	284726-1	–	–	–	–	–

All specifications subject to change. Consult TE Connectivity for latest specifications.

Receptacle Housings

Technical Features

No. of Positions:
60 Position Assembly

Housing Material:
PBT GF20

Wire Size Range:
0.20–0.75 mm^2

Product Specification:
108-18829

Application Specification:
114-18521

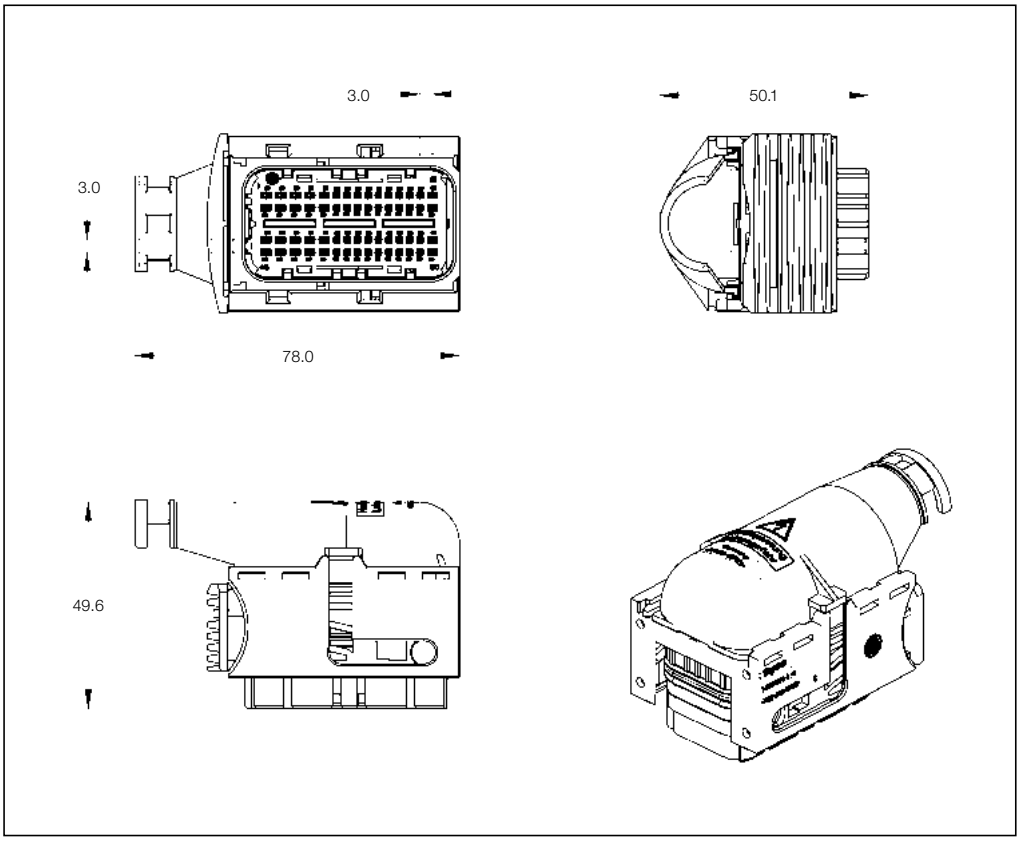

60 Position Receptacle Housings

No. of Pos.	Keying Options	Housing Color	Part Numbers						
			Receptacle Housing	Cover	Lever	Retainer Housing	Mating Pin Housing	Mating PCB Header Right-Angle	Mating PCB Header Vertical
60	–	Black	3-1534903-1	–	–	–	–	–	–
			3-1534903-2						
			3-1534903-3						
			3-1534903-5						

Receptacle Housings

Technical Features

No. of Positions:
64 Position Assembly

Housing Material:
PA 66 GF

Wire Size Range:
0.20 – 0.75 mm^2

Product Specification:
108-20205

Application Specification:
411-20061

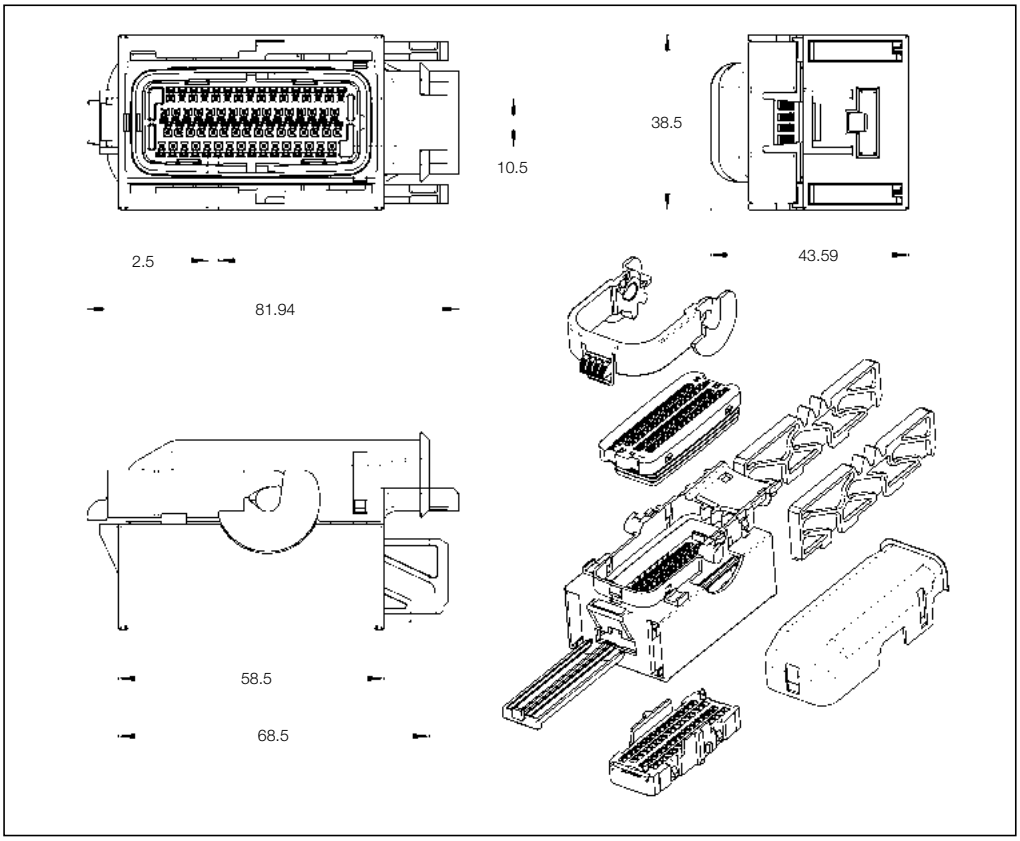

64 Position Receptacle Housings

No. of Pos.	Keying Options	Housing Color	Part Numbers						
			Receptacle Housing	Cover	Lever	Retainer Housing	Mating Pin Housing	Mating PCB Header Right-Angle	Mating PCB Header Vertical
64	See drawing	See drawing	284272-1/-9	–	–	–	–	–	–
			1-284272-0/-9						
			2-284272-0/-3						
			2-284272-7/-9						
			3-284272-0/-7						
			4-284272-0						

All specifications subject to change. Consult TE Connectivity for latest specifications.

Receptacle Housings

Technical Features

No. of Positions:
64 Position Assembly

Housing Material:
PBT GF20

Wire Size Range:
0.20–0.75 mm^2

Product Specification:
108-18030

Application Specification:
114-10021

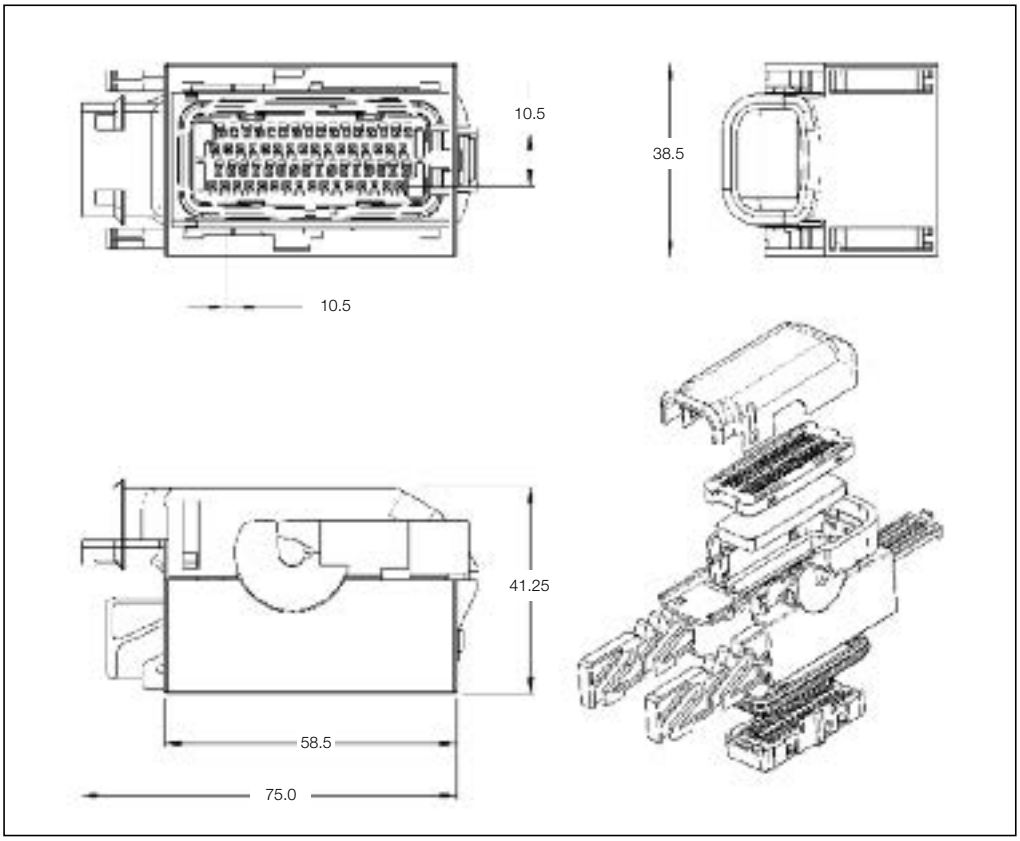

64 Position Receptacle Housings

No. of Pos.	Keying Options	Housing Color	Part Numbers							
			Receptacle Housing	Cover	Locking Device	Cover and Lever	Retainer Housing	Mating Pin Housing	Mating PCB Header Right-Angle	Mating PCB Header Vertical
64	A	Black	368434-1	368441-1	–	–	368440-1	–	–	–
	B	Blue	368434-2	–	–	–	–	–	–	–
	C	Gray	1-368434-1	–						
	D	Brown	1-368434-2	–						

Receptacle Housings

Technical Features

No. of Positions:
81 Position Assembly

Housing Material:
PBT GF20

Wire Size Range:
- 0.3–0.75 mm^2 MQS
- 0.5–2.5 mm^2 Junior Power Timer

Product Specification:
108-61036

Application Specification:
114-18021

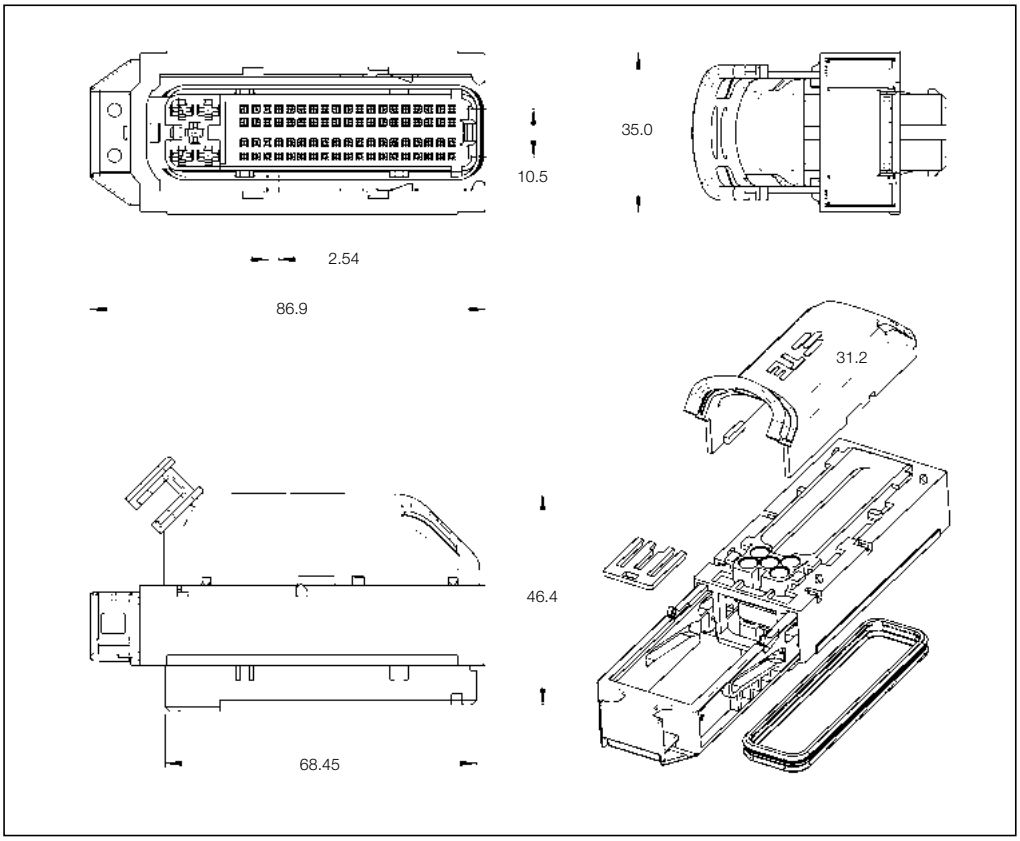

81 Position Receptacle Housing

No. of Pos.	Keying Options	Housing Color	Part Numbers							
			Receptacle Housing	Cover	Locking Device	Cover and Lever	Retainer Housing	Mating Pin Housing	Mating PCB Header Right-Angle	Mating PCB Header Vertical
81	–	Black	936274-1	368333-1	–	–	–	–	–	–

All specifications subject to change. Consult TE Connectivity for latest specifications.

Receptacle Housings

Technical Features

No. of Positions:
81 Position Assembly for Junior Power Timer and MQS

Housing Material:
PBT GF20

Wire Size Range:
- 0.5–2.5 mm^2 Junior Power Timer
- 0.5–0.75 mm^2 MQS

Product Specification:
108-61036

Application Specification:
114-18021-1

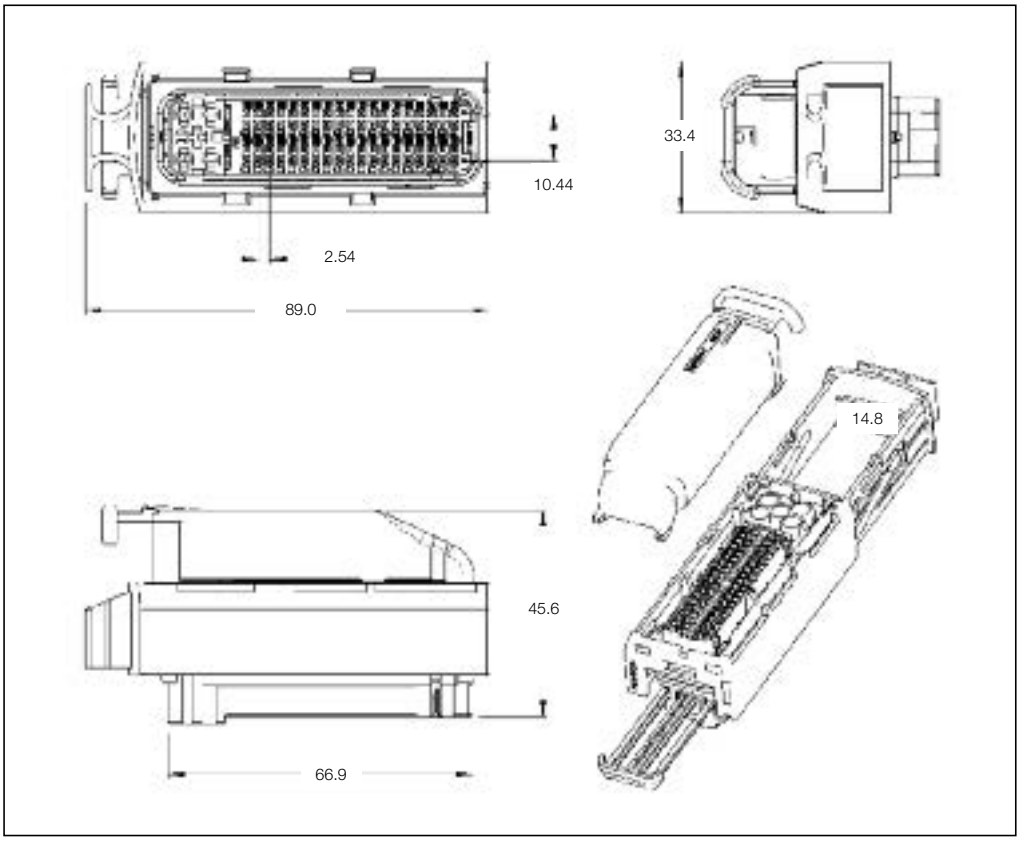

81 Position Receptacle Housings

No. of Pos.	Keying Options	Housing Color	Part Numbers							
			Receptacle Housing	Cover	Locking Device	Cover and Lever	Retainer Housing	Mating Pin Housing	Mating PCB Header Right-Angle	Mating PCB Header Vertical
81	–	Black	368376-1	368389-1	–	–	–	–	368146-1 368146-2 368146-3	–
		Gray	368376-2	–	–	–	–	–	–	–
		White	368376-3	–	–	–	–			
		Blue	368376-4	–	–	–	–			
		Yellow	–	–	–	–	368382-1			
		Red	–	368389-2	–	–	–			

Receptacle Housings

Technical Features

No. of Positions:
81 Position Assembly

Housing Material:
PA66 GF

Wire Size Range:
- 0.2–0.75 mm²
  MQS
- 0.5–2.5 mm²
  Junior Power Timer

Product Specification:
108-5793

Application Specification:
114-18021/18050

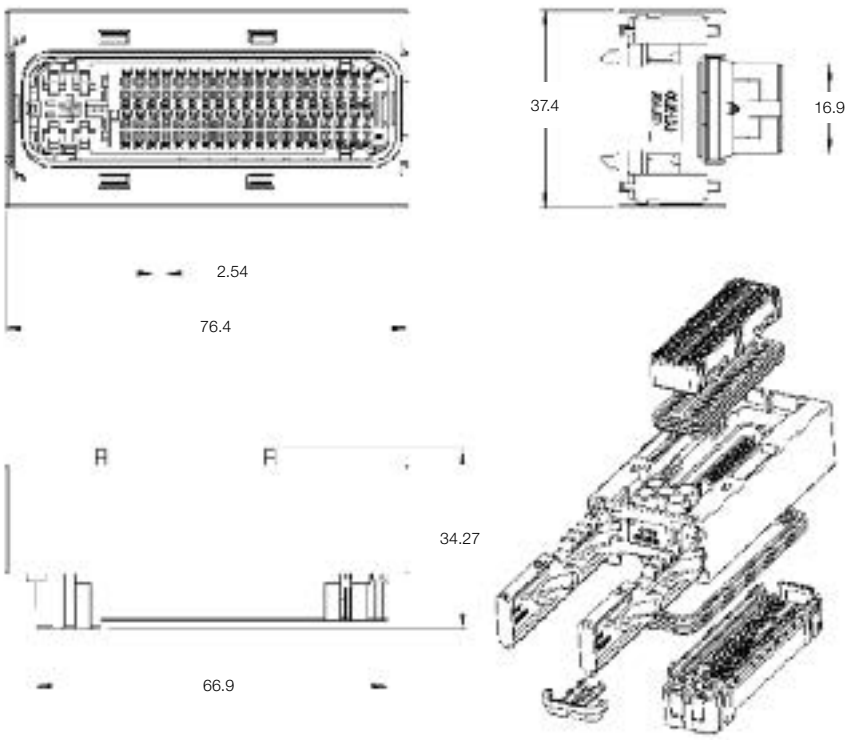

81 Position Receptacle Housing

No. of Pos.	Keying Options	Housing Color	Part Numbers							
			Receptacle Housing	Cover	Locking Device	Cover and Lever	Retainer Housing	Mating Pin Housing	Mating PCB Header Right-Angle	Mating PCB Header Vertical
81	–	Black	1473244-1	–	–	1473247-1 (Type A) 1473250-1 (Type B)	368382-1	–	1241434-1	–

All specifications subject to change. Consult TE Connectivity for latest specifications.

Receptacle Housings

Technical Features

No. of Positions:
81 Position Assembly
(2 x 36 MQS; 5 JPT)
Junior Power Timer and
MQS

Housing Material:
PBT GF20

Wire Size Range:
- 0.5–2.5 mm^2
  Junior Power Timer
- 0.5–0.75 mm^2
  MQS

Product Specification:
108-61036

Application Specification:
114-18021-1

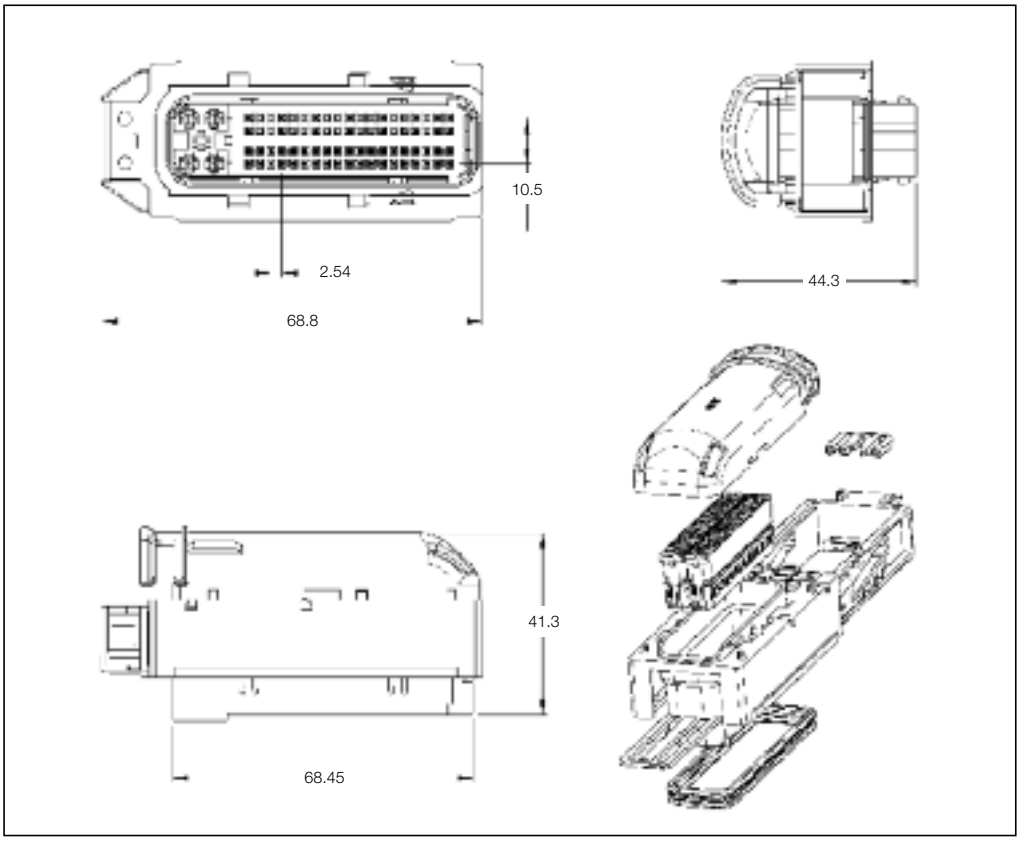

81 Position Receptacle Housings

No. of Pos.	Keying Options	Housing Color	Part Numbers							
			Receptacle Housing	Cover	Locking Device	Cover and Lever	Retainer Housing	Mating Pin Housing	Mating PCB Header Right-Angle	Mating PCB Header Vertical
36	–	Black	368293-1 (Type A)	368291-1	–	–	368297-1 (MQS)	–	–	–
36			368294-1 (Type B)							
5	–	–	368290-1	–	–	–	–	–	–	–

Receptacle Housings

Technical Features

No. of Positions:
94 Position Assembly

Housing Material:
PA66 / PBT ASA GF

Wire Size Range:
- 0.35–0.75 mm² MQS Clean Body 0.63 mm
- 0.5–2.5 mm² AMP MCP 2.8K
- 0.75–1.5 mm² MQS Clean Body 1.5 mm

Product Specification:
108-20235

Application Specification:
411-20067

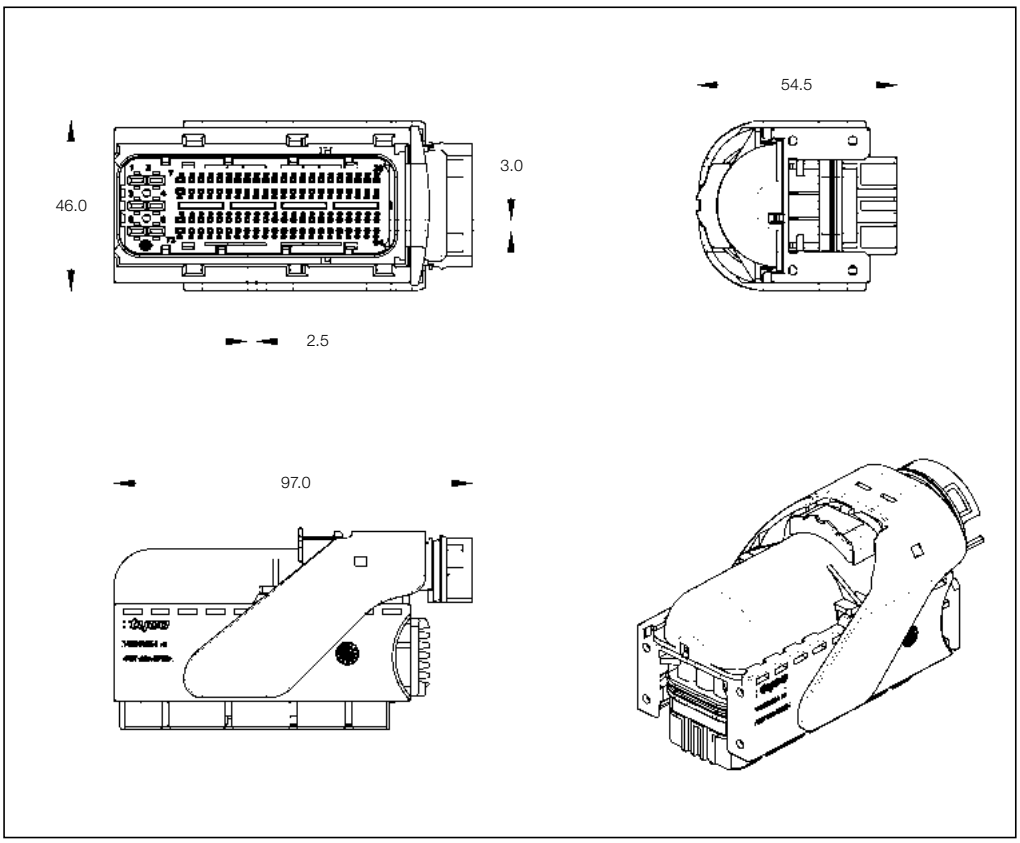

94 Position Receptacle Housings

No. of Pos.	Keying Options	Housing Color	Part Numbers							
			Receptacle Housing	Cover	Locking Device	Cover and Lever	Retainer Housing	Mating Pin Housing	Mating PCB Header Right-Angle	Mating PCB Header Vertical
94	–	Black / Light-Brown	284743-1	–	–	–	–	–	–	–
			284743-2*							

*) No C.P.A. supplied.

All specifications subject to change. Consult TE Connectivity for latest specifications.

Receptacle Housings

Technical Features

No. of Positions:
94 Position Assembly

Housing Material:
PBT GF20

Wire Size Range:
0.20–0.75 mm^2

Product Specification:
108-18829

Application Specification:
114-18521

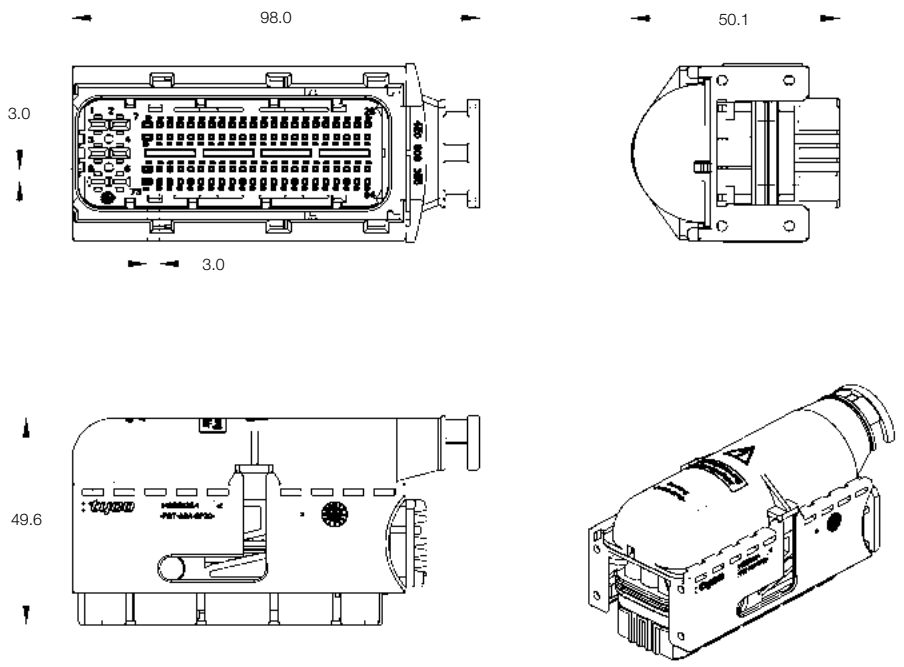

94 Position Receptacle Housings

No. of Pos.	Keying Options	Housing Color	Part Numbers						
			Receptacle Housing	Cover	Lever	Retainer Housing	Mating Pin Housing	Mating PCB Header Right-Angle	Mating PCB Header Vertical
94	–	Black	3-1534904-1	–	–	–	–	–	–
			3-1534904-2						
			3-1534904-3						
			3-1534904-4						
			3-1534904-5						
			9-1534904-4						

Engineering Notes

All specifications subject to change. Consult TE Connectivity for latest specifications.

Application Tooling and Equipment Portfolio

- Applicators
- Crimp Machines and Equipment
- FFC-FPC Equipment
- Hand Tools
- IDC Machines
- Pin Insertion and Press-Fit Machines
- Lead Makers
- Magnet Wire Equipment
- MOST Equipment
- SOLARLOK Equipment
- Wire Preparation Equipment
- Installation, Inspection and Service as well as Training and Short Term Rental Crimp Applicators within EMEA region

For more detailed information please visit our websites: **www.tooling.te.com • www.tooling.te.com/europe • www.tooling.te.com/china**

P 100 Pin Insertion Machine

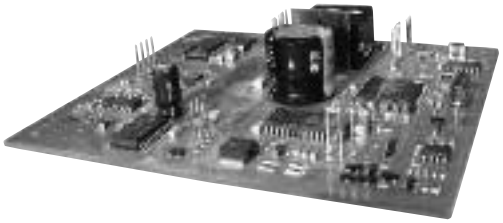

The semi-automatic P100 machine belongs to the TE Connectivity pin insertion system line. Designed and manufactured with a focus on mid-volume level production, the P100 machine provides a broad range of features at a very competitive price. With the ability to apply products from TE Connectivity and other manufacturers, the P100 machine does not limit your production to “TE Connectivity only” applications and provides flexibility to address both current and future tooling needs.

The P100 machine uses a pneumatic power unit together with product specific “quick change” tooling packs. The insertion heads can be equipped with a rotary insertion finger that can apply products at different angles without decreasing the insertion rate. The tooling packs can be exchanged within 30 minutes to meet your full range of application requirements.

CE approval is in process.

- X/Y-Table with stepper motors
- Database driven software for simple programming and automatic setup
- “Quick change” tooling packs allow easy and fast setup
- Wide range of tooling packs for TE and non-TE products available
- Easy-to-use operator interface

P 300 Fully-Automatic Machine for PCB Processing

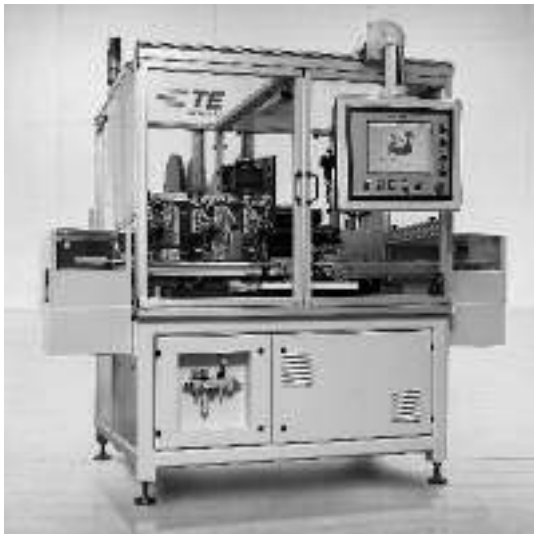

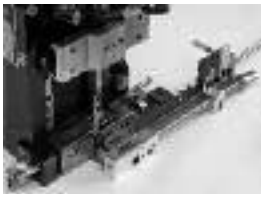

For the automatic assembly of printed circuit boards, the basic P 300 machine is equipped with a product specific insertion head. A speciality is the rotary insertion finger which allows the products to be inserted in different angles of rotation.

A XY table, powered by servo drives, positions the printed circuit boards under the insertion head. Up to 4 motor driven insertion heads, each equipped with a terminal specific conversion kit, allow the application of up to 4 different products. Available accessories like

- Insertion Force Monitoring
- Vision System for position detection and program correction
- Flip unit to insert terminals on both sides of a PCB
- PCB transfer belts for an in-line installation
- Pin length detection
- Traceability features such as reel scan, board scan, etc.
- Motor driven insertion head for continuous wire products
- Tool changer for up to 4 Insertion heads and lower tools allows the P 300 to be adapted to the most varied manufacturing tasks.

All specifications subject to change. Consult TE Connectivity for latest specifications.

P 50 Insertion Machine

The successful product line of single pin insertion machines has been expanded with the addition of a manual operated bench machine for low volume production, repair work and sample production.

The P 50 manual bench insertion machine uses a tracer slide to position the PCB under the pneumatic insertion head. A regular PCB is used as master to position the indexing pin above the insertion hole. When activating the two hand start, the indexing pin extracts. If a hole is detected, the terminal is inserted into the board in production.

To fulfil automotive requirements, the P 50 insertion machine can be equipped with an insertion force monitoring system. In cooperation with an optional barcode scanner, the insertion forces can be stored for traceability purposes.

- Pneumatic insertion head can also be used on other machines of the product line.
- Conversion kits can be changed without too much difficulty to run different terminal types.
- Conversion kits can also be installed on motor-driven insertion heads used on P 200, P 300 and P 350 machines
- Terminal insertion is possible at different angles without the need to re-load the PCB in different orientations.

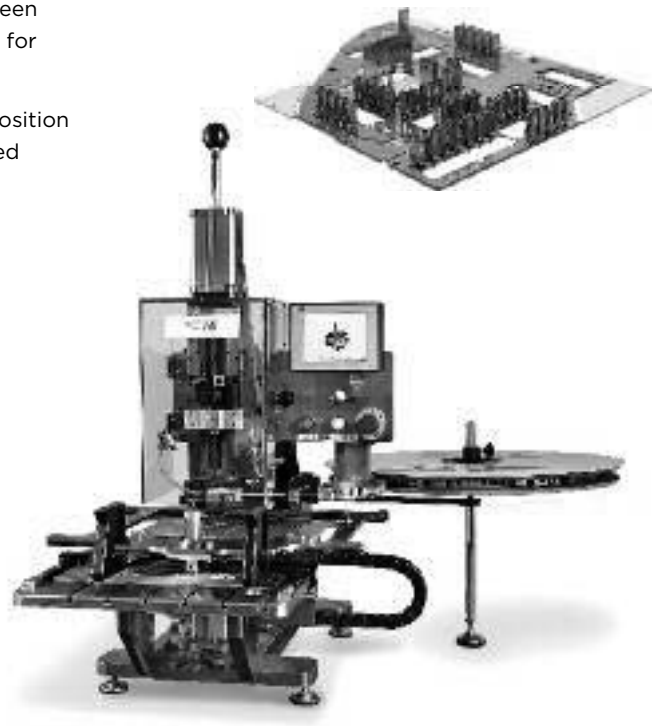

M200C Mulserter Insertion Machine

The Mulserter series of insertion machines from TE Connectivity provides the flexibility and the cost savings to meet a wide range of customer requirements in the through hole technology. Our full range of systems can help with the application of insertion from reeled components, loose components to odd shaped components.

The M200C Mulserter machine is designed to insert eyelet, round pin, gripper, etc. into PCBs automatically with insertion program made by operator. The head for tooling can be chosen from 1 to max. 4 and each head can have individual tooling depending on customer's parts.

Application Tooling for Processing Small Wire Sizes

A range of application tooling solutions is available to embrace the current trend in the automotive industry towards using wires with increasingly smaller cross sections.

Thinner stranded wires require crimp connections with smaller contacts such as the NanoMQS, MQS and other contact systems that allow stranded wires to be processed up to a minimum of 0.13 mm^2 cross section.

Miniaturization of the connectors place higher demand both on the processing machines and tools as well as the machine operator. The hand tool, crimp tool, and fully automatic machine manufacturers have addressed the issue of processing small wire sizes by equipping the machines with tailored components to ensure reliable and secure processing.

To process crimp contacts both hand tools and applicators with pneumatic feed or motorized contact feed can be used.

For automatic processing the quality of the crimp connection can be recorded with standard commercial crimp monitoring systems, modified to accommodate the small cross section.

Available tooling and accessories for the processing of small wire sizes:

- Hand tools for crimping NanoMQS and MQS contacts
- Ocean Applicator with pneumatic or servo-motor contact feed
- Fully automatic crimping machines, equipped with special part kit to apply small wire sizes from 0.13–0.22 mm^2.
- Komax Zeta, with automatic housing loading, customized for small wire applications

Example: The Komax Alpha 355 lead maker can be equipped with special application tooling kits and applicators for small wire sizes.

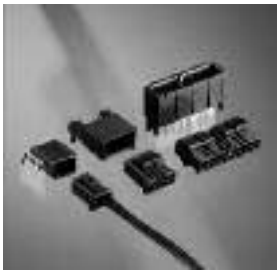

All specifications subject to change. Consult TE Connectivity for latest specifications.

Gamma 255 Fully Automatic Crimping Machine

The Gamma 255 lead maker is a flexible fully automatic crimping machine for efficient wire processing. It processes cross sections in a range from 0.0123 mm^2/AWG 36 to 2.5 mm^2/AWG 14. It is compatible with all commercially available applications. It also handles double-sided crimped wires as short as 20 mm.The entire cross section is processed using programmable, highly dynamic servo-drives and V stripping blades.

As part of its standard equipment, the machine has a prefeeder, splice, wire-end and knot detection, as well as two wire straightening units. A bad wire handling system with automatic post-production is also integrated in the Gamma 255 lead maker. To verify quality, you can also integrate devices for measuring crimp height and pull-out force right into the production process. The compact layout is carefully thought-out and allows you to change over from crimping to twisting, fluxing and tinning very fast.

With its vertically opening safety cover, the Gamma 255 lead maker is readily accessible from all sides. Operations and material handling are convenient and simple. The reliable TopWin software user interface adds to this high level of user convenience in over 20 different languages.

Gamma 263 Fully Automatic Crimping Machine

The combination of simplicity, functionality, efficiency and process safety, in addition to high production output on a small footprint offers an excellent price-performance ratio for this fully automatic crimping machine. Whether roller or belt drive, the application can be adapted to individual needs.

The machine is designed for one and two-sided crimping and for one-sided seal loading. The wire transport system ensures gentle processing of varying conductors with cross-sections ranging from 0.13 mm^2 to 4 mm^2 (26–12 AWG). Proven quality monitoring systems are integrated. A second integrated encoder ensures maximum length and repetition accuracy for stripping and wire length.

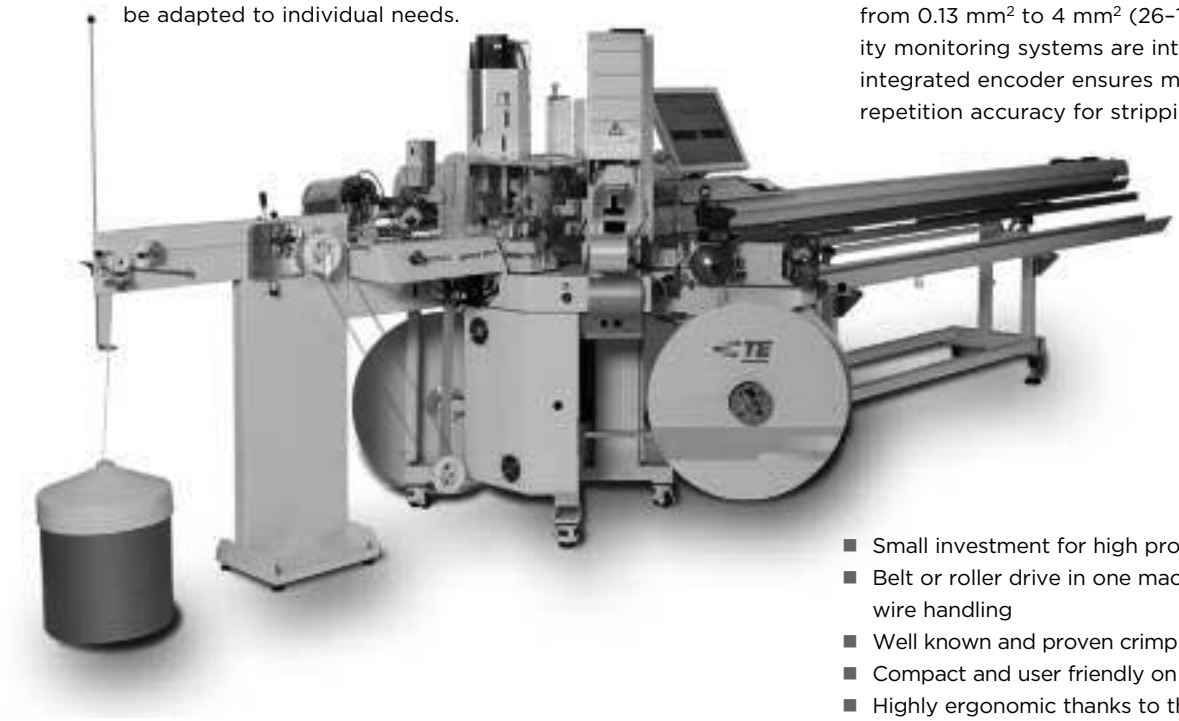

- Small investment for high production output
- Belt or roller drive in one machine for gentle wire handling
- Well known and proven crimping press technology
- Compact and user friendly on very small floor space
- Highly ergonomic thanks to the touch screen control

Gamma 333 PC-B Flexible Wire Processing

The Gamma 333 PC-B lead maker is a flexible fully automatic crimping machine for efficient wire processing. It processes cross sections in a range from 0.13–5.0 mm^2 (AWG 26–AWG 10).

Short conversion times, additional applications and a user-friendly user interface with multiple-language capability. The Gamma 333 PC-B lead makers with belt-drive makes it all possible! With its third processing station and state of the art control software, you are provided high flexibility and an even more efficient way of meeting your wire processing needs.

With an additional processing station on side 1, the Gamma 333 PC-B lead maker enables you to crimp both ends of the wire, to create double crimp connections with three different contacts, to carry out one-ended seal application, tinning or ink-jet marking.

In addition, process monitoring is all integrated to ensure that the wire is cut to length and stripped perfectly.

- Exact reproducible settings for processing stations
- Maintenance-free step and servo motor of top quality
- Very short conversion times thanks to integrated processing modules
- Highly comfortable and convenient to operate thanks to graphic-based TopWin software
- User specified language – more than ten different languages to choose from
- Integrated good/bad sorting
- Can be networked with additional WPCS (Wire Processing Communication Standard) software

All specifications subject to change. Consult TE Connectivity for latest specifications.

Alpha 355 and Alpha 355 S Fully Automatic Crimping Machines

Short setup and changeover times, integrated quality measurements, and top performance are the three main features of the Alpha 355 fully automatic crimping machines.

Alpha 355 Lead Maker

The Alpha 355 lead maker is designed for one and two-sided crimping and seal loading. It even handles double-crimp connections involving varying lengths and the same wire types without any problem. The precise dual-channel blade system allows for a large range of wire sizes without blade changes. With options like the manual wire selector and/or the quick-change system for crimping tools, materials and tools can be prepared for the next job while the machine is running.

- Short changeover times
- Reliable process monitoring
- High production output
- Setup of next job while production of current job is underway
- WPCS (Wire Processing Communication Standard)
- Q-monitoring, CFA+ (Crimp Force Analyzer), SPM (Seal Position Monitor)

Alpha 355 S Lead Maker

The Alpha 355 fully automatic crimping machine is a proven performer and now available in a model offering the flexible selection of modules. The high safety cover and the flat table design is the most striking difference between this version and the Alpha 355 lead maker. It allows processing modules not specifically designed for certain machines to be mounted. One of the two module slots on each processing side is fitted with special mounting tables to accommodate the various mounting methods. Combined with the ingenious open-ended software interface, the flexibility of the Alpha 355 S lead maker can be increased.

- Flexibility in module selection
- Reliable basic machine
- Open-ended software interface
- WPCS
- Q-monitoring, CFA+ (Crimp Force Analyzer), SPM (Seal Position Monitor)

Alpha 356 Fully Automatic Crimping Machine

The Alpha 356 fully automatic crimping machine has room for up to seven processing stations.

A wide variety of configurations are possible, in fact, almost any combination of crimping, seal loading, fluxing/tinning, twisting, fitting with insulating sleeves and end sleeves for strands as well as bulk turned contacts and customer-specific processes. In a configuration featuring three crimping presses, for example, you can crimp the three wire ends for double-crimp connections with different contacts or select different articles without a machine changeover.

With the rotating wire selector and the TopWin user software, you can complete most of the preparations for the next job while the current one is still being produced on the machine.

Crimping tools, contact rolls and other application-specific parts can be changed without tools. Thanks to the use of the modern technology, the production output – and the degree of process control – is extremely high in this machine generation.

- High flexibility with up to seven processing stations
- Both standard and customer-specific processes can be integrated
- Wide choice of different processing configurations
- High productivity thanks to the latest technology
- Integrated quality measurements
- Next job can be prepared while machine is processing current job
- Combinable in networks using WPCS (Wire Processing Communication Standard) interface

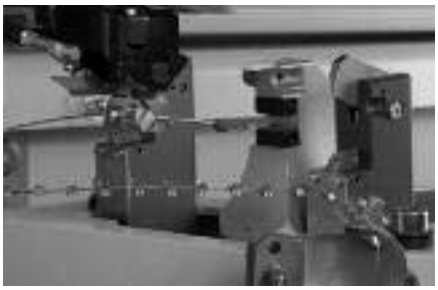

All specifications subject to change. Consult TE Connectivity for latest specifications.

Alpha 433 H Fully Automatic Crimping Machine

The Alpha 433 lead maker is a flexible fully automatic crimping machine for efficient wire processing. Large wires no longer pose a problem. The machine is capable of processing large wires from 0.20–16 mm^2 / AWG 24-6 (fine-wire conductors). The P104 crimping press delivers the requisite force to process large terminals. Terminals can be crimped on both ends but seals can also be loaded at one end. Wire processing to the most exacting standards – great versatility without conversion. The Alpha 433 fully automatic crimping machine is based on state of the art technology and is designed for processing single conductors as well as double crimp connections.

- High flexibility with up to five processing stations
- Short conversion times
- Maximum ease of operation thanks to TopWin user software
- Networkable with WPCS interface
- Modern quality monitoring
- Belt drive for high processing speed
- Extensive range of accessories

Alpha 477 Fully Automatic Crimping Machine

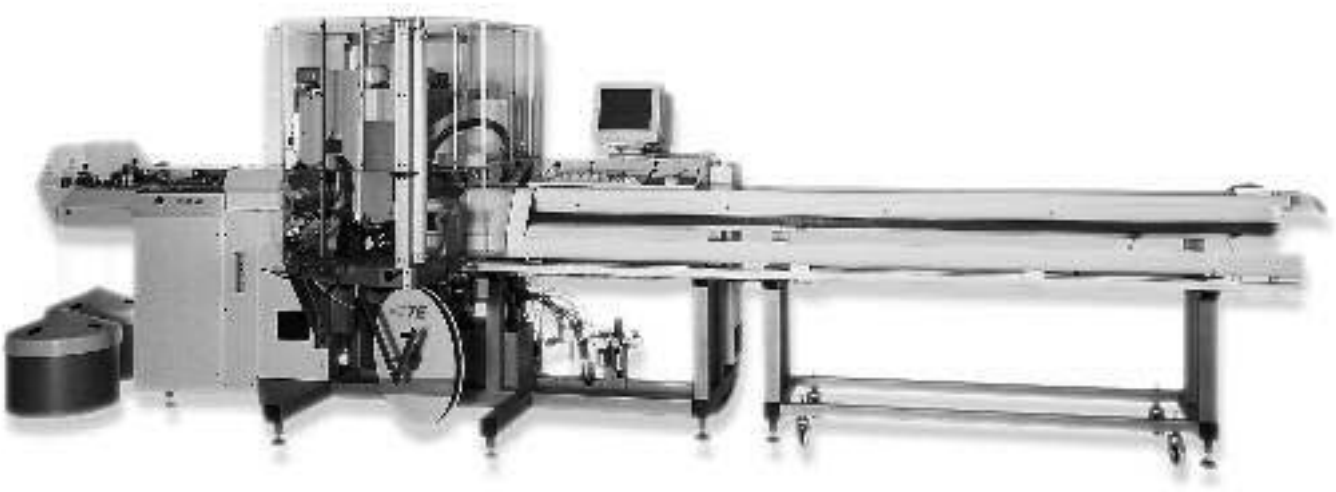

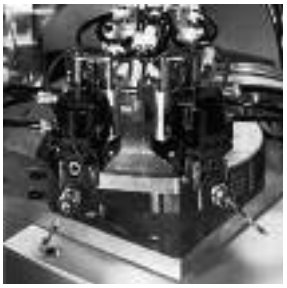

The Alpha 477 fully automatic double crimping machine allows you to process two different wires simultaneously to produce your choice of double crimp or single wires. The two wire drives are fitted with highly dynamic AC-servo axes and an integrated anti-slip system. With this sophisticated handling technology, two wires can be fed in parallel and their ends cut to length and terminated in a controlled process. Wires are handled gently throughout.

With four processing stations at the lead termination and two at the trailing end, you have a large number of possible processes at your command.

- No conversion required when switching from double crimp to single wire production
- Double crimp connections can be produced side-by-side or one above the other
- Integrated head separation and batch sorting
- Active good/bad wire sorting
- An ergonomic layout assures the operator optimum accessibility and minimal walking/reaching distances
- mci 722/mci 712 module assure superb flexibility and shorter changeover times
- Integrated quality monitoring
  – CFA (Crimp Force Analyzer),
  – SPM (Seal Position Monitor)
  with automatic post-production of defective parts
- Accommodates up to six processing stations
- Great ease of operation thanks to TopWin software
- Networking possibilities with reliable WPCS and special software

All specifications subject to change. Consult TE Connectivity for latest specifications.

Alpha 488 Fully Automatic Processing Machine

The high machine output of twisted wires results from the parallel processing of the two conductors and a division of overall processing into three main processes, all optimally synchronized with each other. The linear wire draw-in unit with integrated delta length analyzer (DLA) assures the gentle handling of the wires. The twisting head with AC servo-drive is the heart of the Alpha 488 lead maker. The integrated twist force analyzer (TFA) enables uniform twisting by analyse the forces during the twisting process.

Drawing on continuous stock, the Alpha 488 fully automatic twister produces twisted pairs completely cut to length and terminated. It can handle wire cross sections ranging from 2x 0.13 mm^2 to 2x 2.5 mm^2 with no trouble at all. Four stations on side 1 and two stations on side 2 open up flexible processing possibilities such as two-ended seals loading and crimping.

- Complete processing of continuous stock into twisted pairs with processed ends
- Gentle handling of base stock to ensure high-quality end products
- Also possible to process different open ends up to 125 mm in length on side 1 (as an option)
- Usable as well for two-end crimping and seal loading on two identical single wires
- High degree of flexibility and reduction of conversion times
- Integrated quality monitoring
  - DLA (Delta Length Analyzer),
  - CFA+ (Crimp Force Analyzer),
  - SPM (Seal Position Monitor), also during twisting
  - TFA (Twist Force Analyzer)
- Active good/bad sorting
- Accommodates up to six processing stations
- Great ease of operation thanks to TopWin software
- Networking possibilities with reliable WPCS (Wire Processing Communication Standard) and special software

Zeta 633 L Fully Automatic Processing Machine

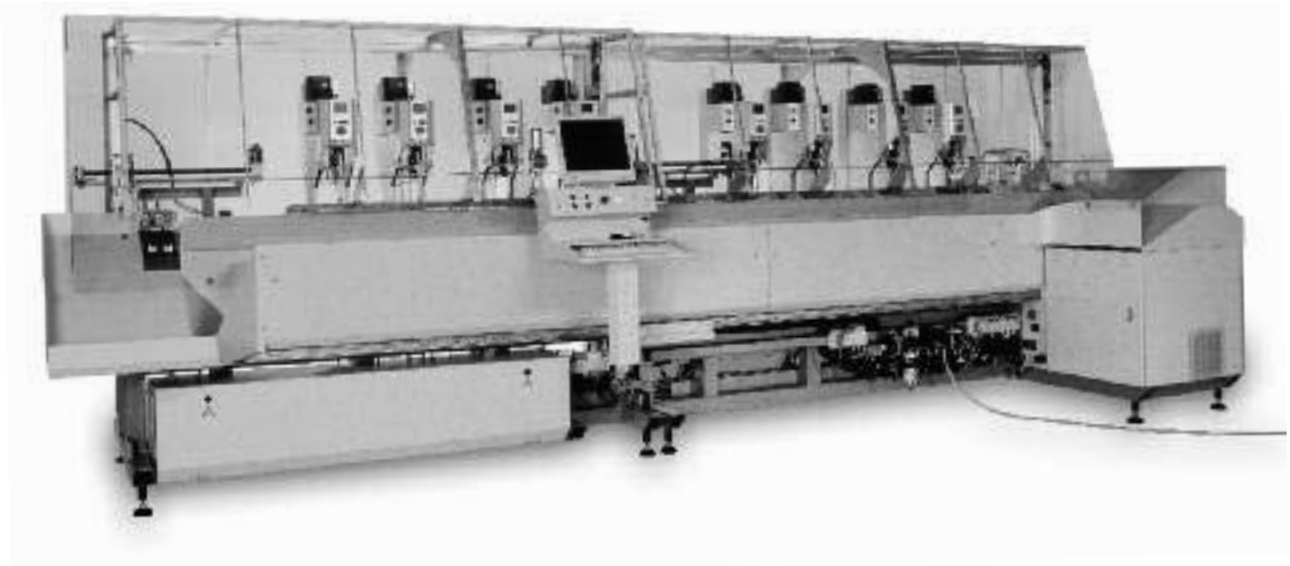

Zeta 633 harness maker is a highly flexible fully automatic crimping machine used for just-in-time production.
With its flexible machine concept, the Zeta 633 harness maker opens up many possibilities for handling small jobs and wire sequences.

Up to 36 conductors are available for wire feed without changeover. Wire transport can be adapted to the specific properties of each conductor. Applying the loop transfer principle, the device feeds the two wire ends of the loop individually one after the other to the appropriate processing station.

Modules can be configured as desired along the entire length of the Zeta 633 harness maker. That means total flexibility for each area of application. The Zeta 633 standard machine accommodates up to five processing stations, the Zeta 633 L Version even 8 processing station. If need be, both Zeta versions can be successively expanded and still have space for additional processing stations.

The wires can be bundled or deposited in predefined order as a chain.

- Up to 36 different conductors can be processed without changeover
- Station layout can be defined as desired
- Full integration of existing processing stations
- High processing quality
- TopWin software: Existing user expertise can be applied immediately.
- Excellent accessibility and safety
- Expandable
- Prepared for Zeta 651 and Zeta 655 machines
- Fully integrated quality monitoring with good/bad sorting
- Customer specified special applications possible

All specifications subject to change. Consult TE Connectivity for latest specifications.

Zeta 651 Fully Automatic Processing Machine

Together, the Zeta 633 and Zeta 651 harness makers offer a reliable and attractively priced complete solution for the single-sided loading of single and double row blocks.

The Zeta 633 fully automatic crimping machine applies the loop transfer principle to feed the two wire ends of the loop individually one after the other to the appropriate processing station. With the Zeta 651 harness maker, the contacts are mechanically centered prior to loading and optionally rotated, if needed. The use of the reliable loading head and the process monitoring systems of the Zeta 655 harness maker ensure optimum loading. The entire loading process is monitored, from insert in chamber to correct locking. Blocks are fed automatically and can be replenished while the machine is running.

Feed and deposit can be adapted to meet the respective needs of the specific customer.

The long deposit system with batch separation and integrated bad part cutter is used for producing harnesses with long conductors up to 3000 mm in length.

- Fully automatic block loading
- Full integration into TopWin software
- Integrated process monitoring with good/bad separation
- Automatic block feed
- Blocks can be replenished while machine is running.
- Economical production of harnesses undergoing single-sided loading

Zeta 656 Fully Automatic Processing Machine

The Zeta 656 harness maker is a block loading robot designed to take into account the ever smaller sizes of production batches. Thanks to its machine design, the Zeta 656 harness maker allows investment costs to be amortized in parallel on different types of wire harnesses, markedly reducing the cost per lead set. The Zeta 656 harness maker allows new applications to be subsequently incorporated. With the flexible pallet carousel, the most varied types of wire harnesses can be produced just-in-time and changeover times are very short. All the operator has to do to change over to a new type of block is switch the two pallets. The loading of each and every block is monitored and controlled by a force sensor.

The Zeta 633 basic machine has a 36-wire changer and several crimping stations with automatic crimp height adjustment, allowing far more than 300 different wire/terminal variations to be processed without any changeover at all. In combination with a machine extension, another four processing stations can be accommodated. Moreover, wire marking systems can be connected, allowing different wires within the same harness to be marked with the operator's choice of black or colored text.

- Extremely broad variety of harnesses on one machine – no application-specific parts
- New applications can be easily added later on
- Economical even for tiny production batches
- Non-contact position recognition for the terminals
- Uniform top quality processing – high degree of process reliability
- Integrated quality monitoring with good/bad sorting
- Short amortization period

All specifications subject to change. Consult TE Connectivity for latest specifications.

Ocean Applicator Series

Crimping standards continue to rise to higher levels of quality and repeatability. Taking customer input and market demands into consideration, TE Application Tooling has created the Ocean Applicator series to meet those higher demands and to take terminal crimping to a new level.

By consolidating our applicator offering, TE can provide design consistency and tooling standardization to the market. One of the resulting benefits to customers of this consolidation is flexibility in the choice of feeding options: new and improved mechanical and pneumatic feeds along with the innovative and precise servo feed option. The Ocean Applicator series design also allows customers to perform field upgrades to system III technology. It provides an upgrade path for terminal intelligence that allows the machine to obtain set-up features as the applicator is upgraded.

- One applicator platform – modular family design
- Two ram interface styles
- Three interchangeable feed options:
  - Mechanical
  - Pneumatic
  - Servo

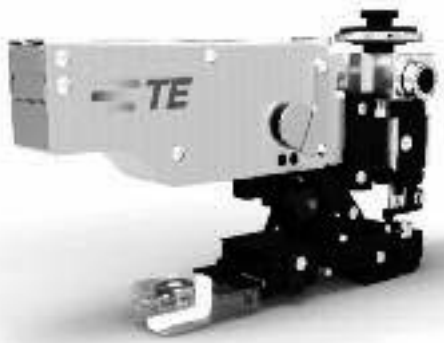

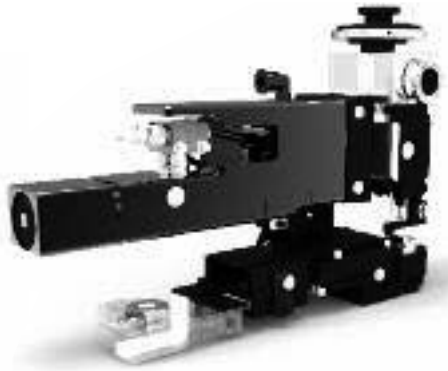

Applicator Wear Parts

Applicator Wear Parts Stocking Programme

To ensure the support of our installed Applicator base, we have established a stocking programme for wear parts. Subsequently, all crimpers and anvils for your applicator are normally available ex stock, ensuring the shortest possible lead times.

Wear Tooling to Apply Stainless Steel Contacts

The application of nickel plated stainless steel terminals has always been a problem with regard to the uptime of the crimp tooling. We have developed crimpers and anvils, using special base materials and surface treatments in the crimp area. These have enabled us to significantly increased the tool life and thus reduce the applied cost of these products.

If you are experiencing specific wear problems in your production, please contact your TE Connectivity Service representative.

Applicator for Large Wire Sizes

For processing of large contacts, eg for battery terminals, we offer heavy and solidly built tools, which are extremely precise in repetitive work for end-feed and side-feed contacts with large cross sections.

A pneumatically driven feed which is efficient and precisely adjustable, as well as a specially robust crimping unit, produce reliable connections which are extremely stable over the long term.

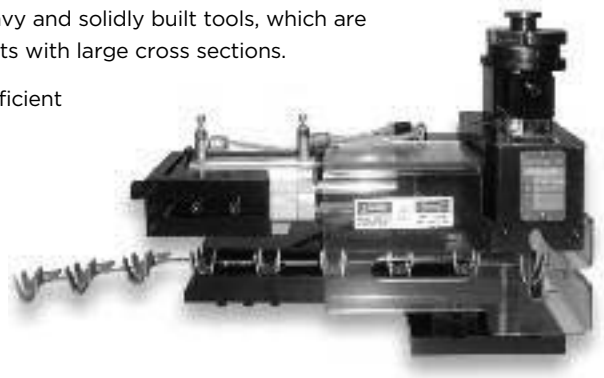

Smart Applicator

Now it is possible to have smart applicators in any of the feed styles of the Ocean Applicator series. The system III applicator data is now extended to an entire smart applicator strategy. It allows the operator to conveniently view all the data about the applicator. The data contains serial numbers, part numbers, wearable tooling part numbers (and tooling cycle counters), strip length, instruction sheet numbers and more. This data includes the terminals, with acceptable crimp heights, that can be terminated with the applicator. With this information conveniently available to the operator, programming and verifying the crimp application has never been easier. Setup will be less time consuming and more accurate.

This system also extends the availability of the high-precision servo feeder technology recently developed by TE Application Tooling.

- Smart applicator data module stores complete information about the applicator
- Feeder automatically reads terminal information from the applicator data chip

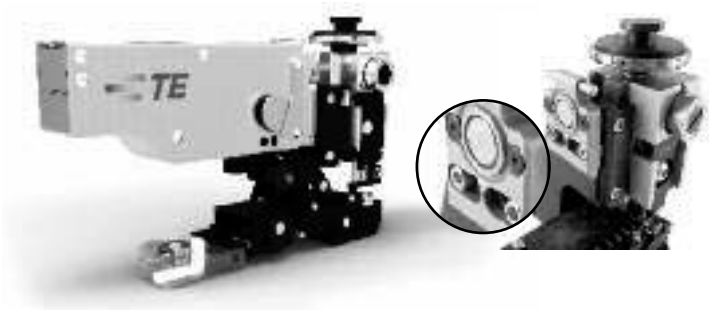

TE Application Tooling has teamed up with Komax Wire to provide a fully integrated smart applicator system into a wire-processing machine. This smart applicator solution is a must for any demanding harness manufacturer. Your wire-processing machine is now able to verify that the applicator installed in the machine is capable of terminating the programmed terminal and that the crimp height specification is correct. This integration allows the operator to view all the applicator data and maintenance counts, wearable tooling, crimp heights, strip length and list terminals that can be used. When a smart applicator is attached to the machine, the operator can select the terminal from a list while programming the article. This makes setup less time consuming and more accurate. With other information provided by the applicator programming parts and verifying application is easy.

- Verification of the installed applicator
- View applicator data
- Less time consuming and more accurate setup

All specifications subject to change. Consult TE Connectivity for latest specifications.

AMP 3/K-40 und AMP 5/K-40

The AMP 3/K-40 and AMP 5/K-40 terminators use a DC motor with gearbox drive. The result is a small-foot-print design that is fast and quiet.

Cycle time is less than 0.4 seconds with an operation sound level of 76 dB(A) with AMP 3/K-40 or 80 dB(A) with AMP 5/K-40 terminator.

Standard features such as tool-less precision crimp height adjust, CQM capability, batch counter and a work light are integral parts of serial equipment. By offering options the AMP 3/K-40 and AMP 5/K-40 terminators can be tailored to the specific application requirements without inflating the price for unwanted features.

With a crimp force capacity of 1.361 kg [3,000 lb], the AMP 3/K-40 is capable of crimping 0.03-2.5 mm^2 [32-14 AWG] wire size.

The AMP 5/K-40 and it's 2.268 kg [5,000 lb] crimp force is capable of crimping 0.03-6.0 mm^2 [32-10 AWG] wire size.

Tooling for processing larger wire sizes is available upon request.

Both the AMP 3/K-40 and AMP 5/K-40 terminators are CE approved.

Features

- Tool-less removal of applicators and guards for quick and simple maintenance and product change over
- Universal electrical input
- Quiet and fast operation
- Customer Manual 409-10204

AMP 5/K-40 Splice Terminator

Applying thru-splices is fast and efficient when you have access to both sides of the applicator for placing and holding the wires.
The AMP 5/K-40 splice terminator with a standard splice applicator provides front and rear access to maximize production efficiency.
And it has full guarding for operator safety.
The splice terminator is offered in two versions, with and without crimp quality monitoring. Equipped with optional CQM II, force and position can be measured during every crimp cycle, providing real-time monitoring of crimp height, the fundamental crimp characteristic.
The CQM II also monitors the shape of the work curve for every termination. Variations in the work curve may indicate improper wire placement, incorrect wire size, insulation in the wire barrel, tooling wear, etc. CQM II details and part numbers are shown on the other side of this sheet. Like other AMP 5/K-40 terminators, the splice version includes fine crimp height adjustment, full guarding with interlocks, and capabilities for jog operation. Splice terminators do not accept heavy-duty mini (HDM), heavy duty industrial (HDI) and Ocean applicators.

Features
- Open access behind crimper maximizes production efficiency
- All the features of the proven AMP 5/K-40 terminating machine
- Magnet-wire splice capability
- Crimp Quality Monitor II (CQM II) option
- Precision manual crimpheight adjustment
- Low maintenance
- Standard 15/8 [41.3] stroke
- Manufactured under an ISO 9001 Certified Quality System
- Universal electric input 100/240 VAC, 50/60 Hz
- Customer Manual 409-10204

Crimp Quality Monitor II (CQM II)

When used on TE terminators the CQM II provides a complete crimp detection analysis. It checks every crimp as it is produced, measuring crimp height of each termination and evaluating the quality of each crimp. If a crimp has questionable characteristics, visual and audible alarms alert the operator. The CQM II includes data ports for printing and networking.

CQM II offers five different crimp analysis methods.
- Crimp height
- Work index
- Peak force
- FFT (Fast Fourier Transform)
- Point-to-point

Features
- Good measurement to check compliance with crimp design
- Real time measurement during crimp cycle
- Inspects 100% of terminations
- Crimp height measurement accuracy: +/-0.012 mm
- Data can be saved to a USB flash drive
- 5 unique analysis methods capable of detecting most crimp faults.

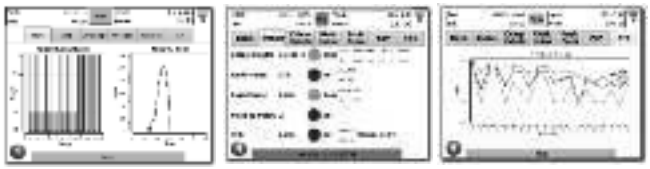

All specifications subject to change. Consult TE Connectivity for latest specifications.

SC15 QC Stripper Crimper

With the SC 15 QC, you can strip and crimp solid and stranded wire with or without insulation as needed in one machine cycle each. The machine processes side-feed contacts with 1 or 2 carrier strips up to a max. 0.5 mm material thickness.

The machine cycle is cam and pneumatic controlled. With the cam control system, a high level of crimping force and repetitive accuracy can be attained. The pneumatic control allows for product-independent, individual settings of the remaining machine functions.

The tool holder of the machine was conceived for a three-piece interchangeable tool. When a non-specified crimp connection is recognised by the crimping force monitoring system, the cable clamping device remains closed. It will only open if the reset button on the crimp quality monitor is pressed. The starting requirements and the complete cycle sequence can be monitored with the LED display on the front of the machine.

When the guard door is opened in automatic mode, the electrical and pneumatic energy supply is interrupted by means of the emergency-off function. The design of the machine is service-friendly.
There are interfaces for the parameter remote diagnosis.

Features

- Automatic bare wire detection during crimping to deactivate stripping and suction and to switch the CQM at this level.
- Crimp force monitoring with statistic analysis (optional).
- Individual parameter setting via software.
- Testing and setting the various functions in setup creep speed.
- Wire sizes range from 0.09 to 4.00 mm
- Insulation diameter: 0.5 to 3.6 mm
- Stripping length: 12 mm and less, depending on the number of wires
- Wire insertion depth: 10 mm
- Flexible work light
- Excellent work area visibility
- Low operational noise

Electrical Connection
115-230 V, 50/60 Hz

Compressed Air
600 kPa [6 bar]

Repeatability
Crimp height: 0,01 mm [0.0004 in.]
Stripping length: 0,1 mm [0.004 in.]

Dimensions (H x W x D)
460 x 480 x 625 mm [18.1 x 18.9 x 24.6 in.]

Noise Level
<70 dB(A)

Weight
55 kg [121.3 lb.] (without reel)

BT 752 Stripping, Sealing and Crimping Machine

The BT 752 delivers three processes in a single device: stripping, seal loading and crimping. Reliability and top production performance coupled with the user friendly TopTouch interface are the features that make this semi-automatic device such a compelling product. The BT 752 is an economical alternative to fully-automatic machines.

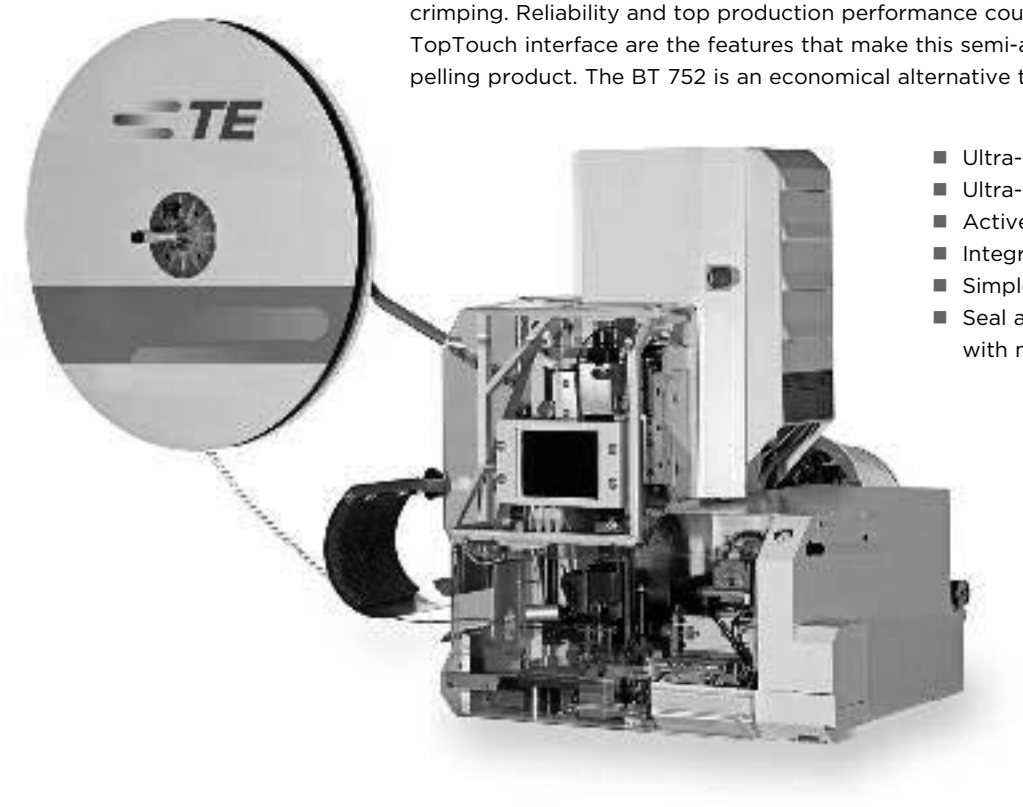

- Ultra-short setup and cycle times
- Ultra-simple changeovers
- Active quality control
- Integrated crimp force analysis
- Simple operation with TopTouch
- Seal applications compatible with mci 761, mci 762 and bt 700

BT 712 Bench Top Crimping Machine

This all-purpose press accommodates the use of all common commercial crimping tools.

The software (in 12 languages) can be operated from a small touch screen interface (TCI). The bench top press is also a service tool with a data memory for storing up to 500 articles, for making backups and for uploading updates. The crimp force analyzer that comes with the press detects good and bad wires reliably and gives a detailed description of errors.

Proven and useful options such as short projecting cable, bad contact cutter (BCC), fine adjustment and a contact strip chopper can all be integrated in the press to boost efficiency and process quality even more.

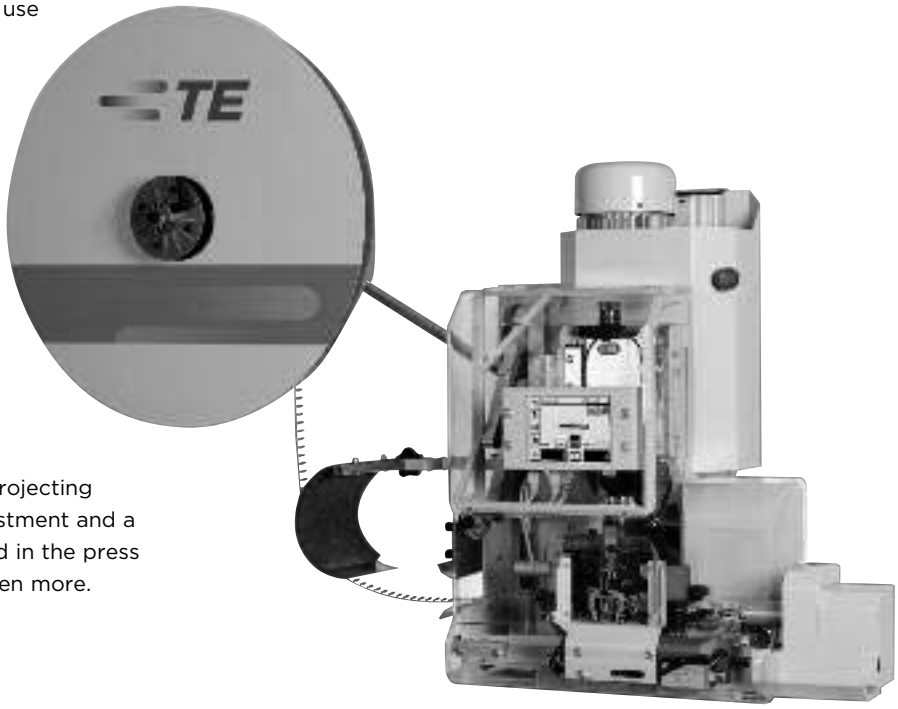

All specifications subject to change. Consult TE Connectivity for latest specifications.

BT 722 Crimping Machine

The BT 722 crimping machine is used for the manual crimping of contacts. The BT 722 is operated from a touch screen. The new TopTouch user interface allows jobs to be set-up quickly and easily. Even during production set-up, the machine operator is prompted to conduct quality measurements. Following the input of the calculated values in the user interface, the crimp height is automatically corrected. This prevents errors arising from the manual setting of the crimp height.

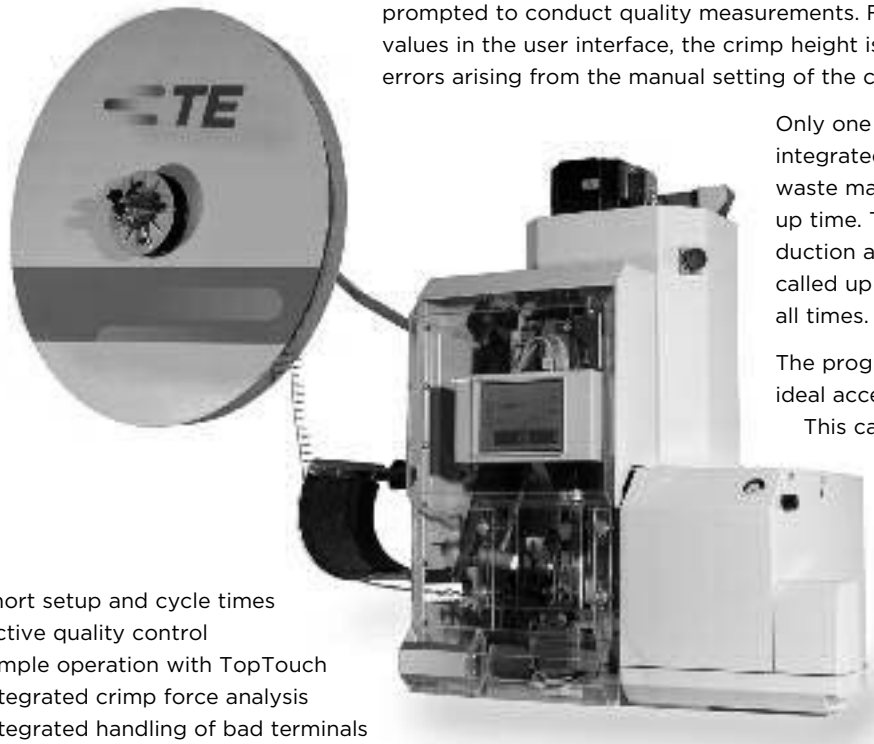

Only one crimp is needed for referencing the integrated crimp force monitoring. This reduces waste material consumption and minimizes set-up time. The quality values measured during production are saved and can therefore always be called up later. This ensures traceable quality at all times.

The programmable DigiStripper (Option) is an ideal accessory to the BT 722 crimping machine. This can be set-up without any mechanical adjustment. Thanks to the functions zero cut and pull back, as well as the pre-programmable cutting depth, the perfect stripping is ensured.

- Short setup and cycle times
- Active quality control
- Simple operation with TopTouch
- Integrated crimp force analysis
- Integrated handling of bad terminals

Gauge for Presses

In order to help you to ensure that our applicators are placed correctly in the presses we offer you this press gauge.

It is possible to have a mis-alignment between the center of the applicator and the terminator due to the way they mount in the terminator. If this happens, a side load is applied to the applicator which can lead to pre-mature wear and/or quality problems with the crimped terminals.

The use of the gauge is simple: You install the press gauge into the press like an applicator. Then you unlock the gauge head, on which is mounted a gauge ring. A spring in the gauge is now pressing the gauge head upwards. The gauge ring should now fit easily into the press head. If this is not the case the applicator ram would not be in a centred position and the mounting plate of the press has to be adjusted. The special design of the press gauge base plate allows free access to the press mounting plate fixing screws.

Crimpmatic 970/971 Crimp Machines for Reeled or Loose Piece Terminals

Both machine versions permit the cost effective manufacturing of crimp connections with a high production efficiency. The Crimpmatic 970 machines are cabable of processing wires of up to approx. 16 mm^2 (AWG 5), depending on the terminal stock thickness.

- Compact, space-saving design
- Compatible with MQC applicators
- Step mode during set-up

The Crimpmatic 971 machine is capable of processing wires of up to approx. 50 mm^2 (AWG 0), depending on the terminal stock thickness. The machines can be equipped with a quick change device for power crimp tools. MQC applicators with a lower dead center of 135.78 mm can be mounted by means of an adapter plate. These machines can be utilized as manual work stations and can be integrated into fully-automatic processing lines. The terminator as shown is a manual work station Crimpmatic 971. The unit can be supplied with or without crimp process monitoring, or it maybe retrofitted later.

Options are available upon request
- Crimp force monitoring
- Paper spooler
- Adapter plate for MQC applicator

Applicators
- Especially designed for larger wire sizes
- Pneumatic feed
- Can be used with both crimp presses Crimpmatic 970 and Crimpmatic 971

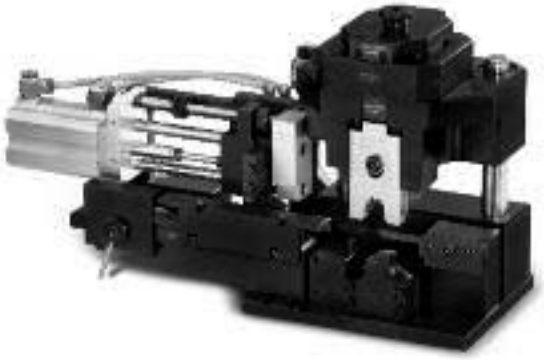

All specifications subject to change. Consult TE Connectivity for latest specifications.

AT-SC Pneumatic Safety Crimping Machine for Loose Piece Terminals

Maximum ease of use with optimum safety was the challenge when developing this pneumatic crimping machine for loose contacts.

This pneumatic crimping machine features a newly developed safety mechanism, and is designed to crimp connections up to 50.0 mm2 depending on the terminal design. By means of a fitted safety valve, crimping is not released where the size of the opening between the impact surfaces of the dies exceeds 5.9 mm. Consequently, there is no need to specify any safety covers to protect the operator.

- Parallel closing mechanism
- Variable closing speed
- Electronic piece counter
- Safety system

AT-55 Pneumatic Crimping Machine for Loose Piece Terminals

This pneumatic crimping machine was designed for crimping insulated and non-insulated terminals from 0.14 mm2 to 120.0 mm2 depending on the terminal.

With the additional of an optional cutting unit, the AT-55 crimping machine is able to cut ribbon cable up to a width of 30.0 mm as well as copper conductors up to max. Ø 28.0 mm.

This series is equipped with a battery cycle counter. Safety guards allow crimp terminals up to a diameter of 25.0 mm. Larger terminals can be applied upon request.

AT-66 Hydraulic Crimping Machine for Loose Piece Terminals

The AT-66 hydraulic crimping machine features an extremely compact design resulting in low space requirement. The hydraulic power is provided by a separate hydraulic unit with main switch, power distribution and pump. The machine offers possibilities for various applications with a crimp force of 150 kN and an open operating space of 100.0 mm in height.

A key operated switch protects the basic and operation data. It permits adapting and safeguarding the particular procedure for the application. The fitted memory module allows 250 different programs to be stored.

- Programmable
- Key operated switch protected user interface
- Fast changeover times
- Compact design
- Short cycle time

All specifications subject to change. Consult TE Connectivity for latest specifications.

AT-ST Wire Stripping and Twisting Machine

The AT-ST machine strips and twists wires with sizes from 0.03 mm^2 up to 6 mm^2 / AWG 32-10. The adjustable turret head with 8 guide tubes for different wire sizes centralizes positioning of wires. Special ground blades cut and strip special insulations.

The machine can be set either clockwise or anticlockwise dependent on wire drilling direction.

- Adjustable turret head
- Cutting/Stripping blades for special insulation
- Stripping and twisting process

AT-FE 0400 Strip Box

The strip box is an electric driven machine to strip standard PVC (polyvinylchlorid) wires up to an outside diameter of 4.2 mm. Except of power supply no further equipment required. Due to the low weight the AT-FE 0400 machine can be placed on nearly every workplace.

- Electrically driven
- Simple adjustment
- Easy handling
- Stepping switch for manual operation
- Small space required
- Practically maintenance-free
- Clear cut through insulation by special shape of cutting blades / 4 cutting blades
- Continues adjustment of wire size and stripping length

Kappa Cut and Strip Family

The Kappa family strippers are ideal for cutting individual and special wires to length and stripping them. They can strip in sections, allowing them to strip even extremely long length in perfect quality. The machines cover an extraordinarily broad range of cross sections.

Kappa 310, 320, 321, 330 and 350 strippers support a variety of processing options such as wire marking with hot-stamp or ink jet markers. Hot stamp marking can even be done on the Kappa 310 stripper, the entry-level model.

New Kappa Generation:

- Dynamic, flexible cutting and stripping unit
- New intelligent sensors
- New electronic and software
- Optional TopWin™ connection

All specifications subject to change. Consult TE Connectivity for latest specifications.

Micrograph Laboratories for IDC and Crimp Contact Systems

The micrograph laboratory is designed for TE Connectivity terminal systems but is not restricted to them. With a modified sample holder, cross sections of competitors products are also possible. The flexibility of the laboratory allows cross sections of a variety of terminals.

Better than conventional processes the new cutting method makes potting and long drying times a thing of the past. So processing time can be reduced dramatically.

For special requirements an optional impregnation module is available. With it the cutting area can be lightly fixed.

If you need more detailed information please contact your local TE Application Tooling representative.
The relevant contact can be found on the website below.

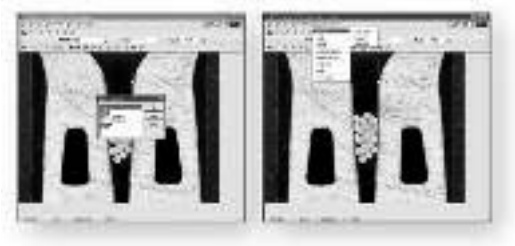

- Quick process flow of 5 to 10 minutes
- Sample range: 0.22 mm² up to 100 mm², depending on sample holder
- No cross section potting
- Evaluation according to DIN and different electrical and physical parameters
- PC specific software for micrograph evaluation
- Compact, easy to operate
- Sample range: 0.22 mm² up to 6 mm²
- Optional electrolyte etching module
- Easy fixation station for sample holder
- Secure mechanism for optic during transportation
- 1.3 megapixels USB 2.0 camera with SL Vision II evaluation and documentation module

Automatic Micrograph Laboratory for Crimp Terminal Systems

The automatic micrograph laboratory allows continuous preparation and analysis of micrographs.

It is the ideal solution for production lines especially in the automotive wire harness industry, thanks to small footprint, low weight (app. 35 kg) and short cycle time for micrograph production time down to 1 minute per sample.

Cutting and grinding are done fully automatically. Therefore the automatic micrograph laboratory provides excellent repeatability.

- Compact automatic micrograph laboratory for production of micrographs within shortest time.
- Automatic sample transport system conveying the mobile sample holder through the stations for sample cutting and grinding
- Accurate alignment of the sample with the sample holder by laser
- Sample range: 0.08 mm² up to 6 mm²
- Integrated etching system
- Integrated optical evaluation system for micrograph analysis

Resistance Welding Module

TE Application Tooling offers semi- and fully-automatic modules for resistance compact welding of terminals. This resistance welding process allows us to achieve minimum transitional resistance between conductor and contact, higher current capacity and long-term stability of the wire termination.

In this process, the bundle of strands in the conductor is condensed into a block by side-mounted ceramic plates. After this the strand bundle is welded to the contact by the introduction of a powerful current via an electrode. Typical features of the resistance welding unit offered by TE Application Tooling are a very short cycle time, a long electrode life time, a fully-automatical parameter setting process and the recording of all process relevant data.

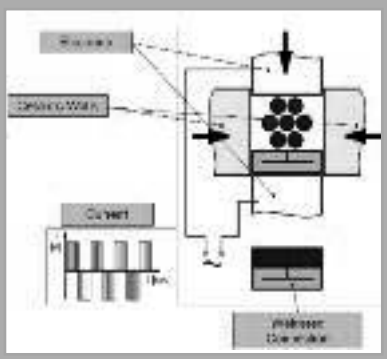

All specifications subject to change. Consult TE Connectivity for latest specifications.

MOST™ Sets

The MOST Sets are simple and inexpenisve solutions for repair work in the workshop. To meet your requirements we offer several different versions of sets.

The basic version is equipped with two hand tools. One for stripping and cutting of POF (Plastic Optical Fibres), another one for crimping of POF and an additional spare cutting unit.

A further version contains such items as a 20 meters POF, some male and female contacts and one position inline couplings. Other accessories are available in different equipment versions.

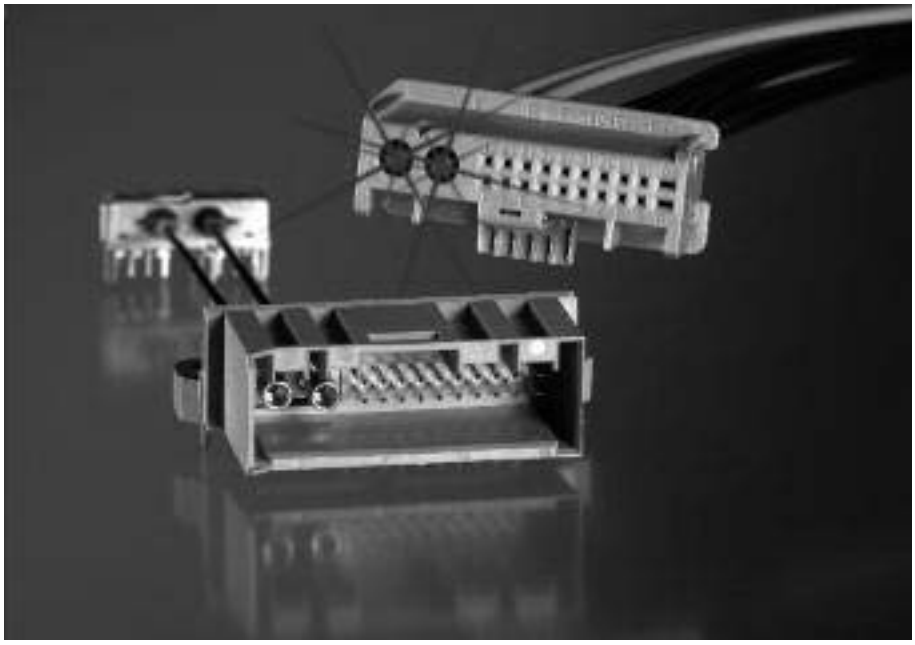

SDE Standard Die Envelope

SDE is a flexible approach to crimp tooling that allows the use of the same dies with tooling across a range of application platforms. A large selection of die options are already available for crimping a broad range of terminals and wire sizes. Many die sets have multiple cavities for crimping more than one wire or terminal size and we can provide custom designs where volumes permit.

SDE Crimp Tools

SDE dies are interchangeable in tools from portable hand tools (manually or battery-powered) to pneumatic hand tools and electric bench terminators. It's a family of tools that you can take from bench to production or into the field, without the need for different dies to fit each kind of tool.

You can rely on SDE to provide for your long term needs because of our commitment to continued development of dies and the tool range.

All specifications subject to change. Consult TE Connectivity for latest specifications.

Hand Tool Kits

TE Connectivity provides standard kits that contain the necessary equipment to carry out specific tasks to the high professional standards. We can also provide custom kits for volume requirements containing only tools, or a combination of tools and terminals tailored to your specific requirements. Please visit our tooling website to view our online hand tool catalogue for standard kits, or find your local contact to discuss custom kits.

Insertion and Extraction Tools

Insertion and extraction tools are used for inserting discrete terminals into connector housings or removing them, without causing damage to either the terminals or housings. Our new standard design features a comfortable handle and snap-in/out protective cover that allows users to stow the business end of the tool to help protect from inadvertent personal injury when the tools are not in use.

Many different design types currently exist for our vast terminal product range, which we continue to convert. If you would like the tool you use converted to the new design, want a custom kit or tools in this design for other manufacturers products – contact us, and where volumes permit we will be pleased to provide you with a quotation for your requirement.

Flexible Flat Cable (FFC) Termination Machine

The termination machine is an electrical driven semi-automatic assembly machine that uses different applicators to terminate reel-feed FFC contacts to manually supplied FFC cables.

The machine terminates a predefinded number of contacts to the supplied cable end. Individual wire positions can be skipped during the assembly sequence.

- Alignment of the cable is effected in the machine
- Number of pins can be programmed
- Pitches between 1.27 mm and 5.08 mm can be programmed
- Individual wire positions can be skipped
- Operator friendly interface via touch screen
- Interchangeable applicators available for different products
- Quick change of the applicator

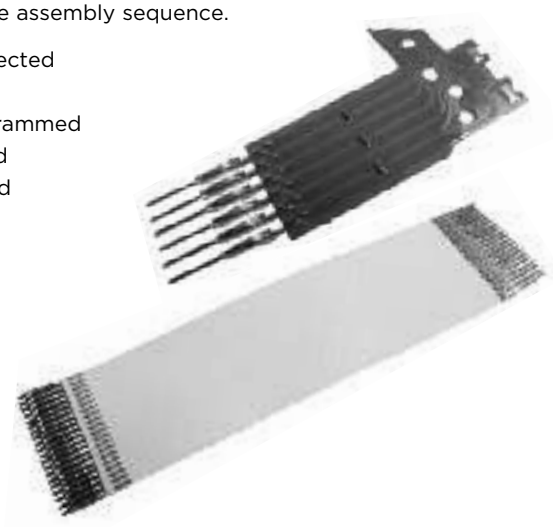

FFC Applicator

The FFC applicator was desinged for the FFC termination machine. The adjustment of the crimp hight is similar to other TE Application Tooling crimp applicators. All wear parts are easy to change.

Different types are available for following terminals:

- FFC MQS and MQS+ terminals
- FFC Junior Timer terminals
- FFC AMPMODU .100 terminals
- FFC AMPMODU .050 terminals
- FFC Card Edge
- ACTION PIN contacts
- FFC soldering contacts

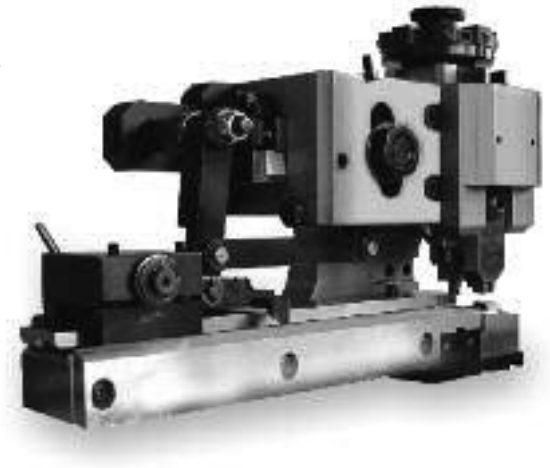

Hand Tool for FFC Connections

This tool allows crimp connections to be made between foil and FFC terminals. Flexibility is built in, through the hand tools variable
settings. The settings have to correspond to the specification. The crimp height is adjustable according to the foil thickness.

The hand tool was designed for FFC loose piece terminals with multi-crimp barrel.

- FFC foils with 2.54 mm pitch
- Max. width of the foil 88 mm
- Manual foil feed by hand wheel
- Table clamp for ergonomic handling

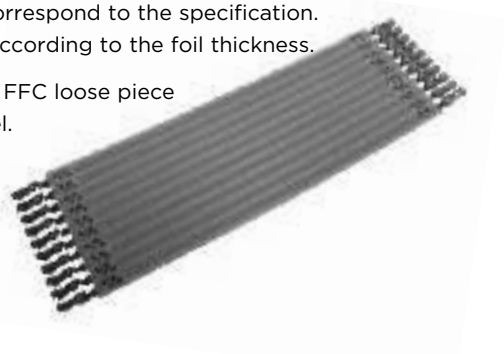

All specifications subject to change. Consult TE Connectivity for latest specifications.

FFC/FPC Machine

The FFC/FPC bench machine creates electrical connections between TE Connectivity FFC terminals and flexible flat cables. Thanks to its adaptable circuit fixture the machine is simple and easy to load.

Prior to initializing a crimp cycle, the vision system establishes the precise location of the first conductor track. A positional correction is effected as appropriate.

The equipment combines the functions of terminal feed, cutting the product off the carrier strip, crimping and chopping of the carrier strip. An integrated crimp force monitor ensures high quality crimp connections. An optional faulty crimp cut off device prevents the further use of defect circuits.

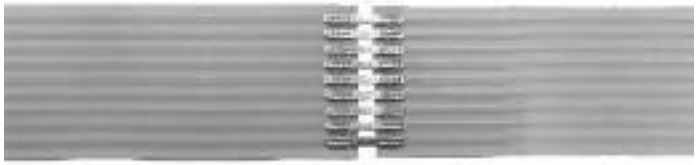

Flexible Flat Cable (FFC) Termination Machine

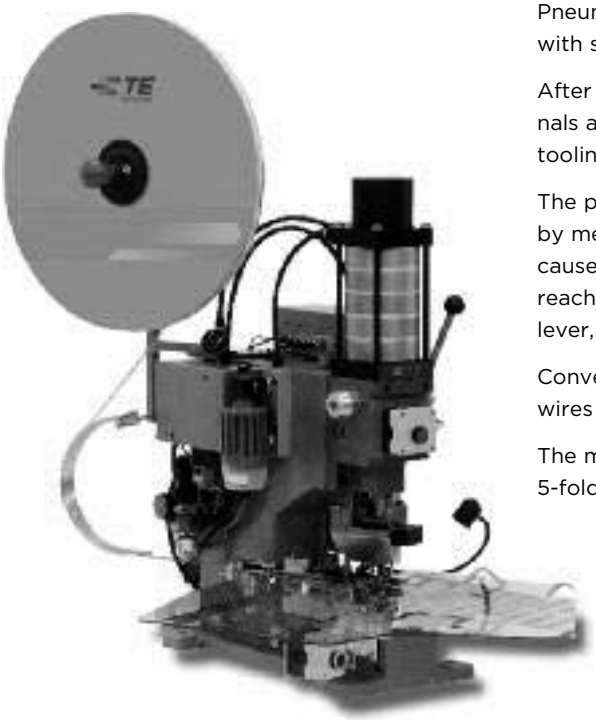

Pneumatic machine for the semi-automatic termination of AMP splices with sensor foil on one side and flexible leads or diodes on the other.

After inserting the sensor foil, diode and the stripped wires, 4 terminals are supplied for each separate function. The upper and lower tooling is brought together with the manual lever.

The power stroke which produces the complete assembly is initiated by means of a 2-handed operation. An automatic back stroke control causes the ram to reverse after Bottom Dead Centre has been reached. After opening the upper and lower tooling with the manual lever, the finished assemblies can be removed.

Conversion kits allow different configurations of foils, diodes and wires to be accommodated.

The maximum pressure of 25 kN at 500 kPa is achieved by means of a 5-fold tandem cylinder with a diameter of 125 mm.

Compatible TE Connectivity Terminals
FFC/F-Crimp Splice

All specifications subject to change. Consult TE Connectivity for latest specifications.

TE heat and shrink application equipment is designed and engineered specifically for the installation of TE Raychem heat-shrinkable products.

It provides the optimal heating temperatures, performance, and control features for maximum production efficiency. It is designed for general industry use or developed specifically in close collaboration with customers, using standard heater components.

Raychem AD-3050 Seal Test Equipment

The AD-3050 seal test equipment is a manually operated pneumatic device, intended for use as a convenient 'inprocess' sampling technique for checking sealed splices. Different combinations of in-line or stub splices can be pressure tested in any of the combination of fixtures (8 in total).

There is also a facility to allow leak testing of various connectors. The tool is also intended for use as a quick and easy sampling technique for the preliminary selection of installation conditions where Raychem products are used for protection of the splice.

TE Connectivity has seen good correlation between results obtained with the AD-3050 seal test and those obtained through water immersion testing.

However testing in accordance with the OEM (Original Equipment Manufacturer) specification is the only way of confirming that the OEM specification is being met. The splice products are located in clamps which deliver the test pressure.

The product is immersed in water and pressure is delivered down the wire(s) to the sealed area. The test result is determined visually by looking for bubbles in the area of the sealing products.

Raychem RBK-ILS Processor Mark II

The RBK-ILS processor MarkII is a semi-automatic unit designed specifically to install splice sealing products onto ultrasonically welded or crimped splice joints used in auto-motive harnesses.

The tool can operate in several modes:

- Stand-alone – operator sets time and temperature.
- Sequenced – preset times and temperatures can be sequenced automatically (and can also be randomly selected from sequence stored.)
- Automatic communication with upstream ultrasonic welder can allow time and temperature to be automatically set without operator intervention.

In this way the operator is able to efficiently load both machines and so minimise 'dead time'. Installing Raychem splice sealing products immediately after welding gives reduced installation time and earliest possible mechanical protection for the welded joint. The operator positions the splice sealing product centrally over the splice joint and then locates the assembly into the gripper mechanism.

Pushing the two start buttons initiates the machine cycle thus bringing the heating chamber into place over the joint area. The heating chamber remains in place for the set period and then returns to the rest position. The wire assembly is automatically ejected, with the splice sealing product installed and the joint area sealed, insulated and strain relieved.

The machine can install sealing product on in-line or stub-type splices.

All specifications subject to change. Consult TE Connectivity for latest specifications.

Application Tooling Field Service Organization

TE Connectivity provides global field service support on our application tooling. Field specialists are located across every continent to provide timely response to customer needs. In addition to installation, warranty and repair service, TE Connectivity field specialists can help you with equipment choices, training of maintenance and operation personnel, troubleshooting assistance and spare parts. Service contracts to cover all your
application equipment needs are also available. We have implemented a service management tool that provides standardization of reporting that gives us the ability to continuously improve our global service organization. Throughout the year we educate our field service engineers on the latest industry technologies and equipment. See for yourselves the advantages of our professional consultation and individual services. Our qualified service teams are ready to assist you.

Service Offerings:

Standard Service
Includes troubleshooting problems, making repairs, and/or installing parts.

Equipment Installations
Providing installation, set-up and training of application equipment at the time of delivery.

Training
Providing customers with practical training programs addressing machine operation, set-up, maintenance, inspection, and connector application. Training programs can be scheduled at the customer's site or a TE Connectivity training center. A training certificate will be issued upon the completion of each formal training course.

We are proud to be able to offer a comprehensive range of customer training programs. The following are some of the standard training programs we offer:

- The Fundamentals of Crimp Technology, 4901
- The Proper Handling of Crimping Applicators, 4902
- Crimping Training Program, 4903 (combination of 4901 and 4902)
- The Proper Handling of Crimping Hand Tools, 4904
- FFC Crimp Technology, 4906
- Fundamentals of Crimping Technology for Machine Operators, 4907
- Magnet Wire Connection Technology, 4910
- Advanced Seminar on Crimping Quality, 4911
- Advanced Seminar on Crimp Force Monitoring, 4912
- Advanced Cross Sectioning - Photos, 4913
- Pin Insertion and Press-Fit Technology, 4914
- Insulation Displacement Technology, 4930

Service Contracts

Preventive Maintenance and/or Inspection Calibration

Provides service for periodic visits to perform preventive maintenance and/or inspection calibration service on hand tools, applicators, bench and automatic equipment.

Comprehensive Service

Provides for a specified number of field specialist visits. A visit can be used for services such as standard service, installation, set-up and training for all application equipment, preventive maintenance and/or inspection calibration, spare parts management, equipment process evaluation and technical assistance on application tooling and/or product related problems or concerns.

"A customized service / training contract ensures equipment optimization"

Short Term Rental of Crimping Applicators
Applicators are being increasingly required at short notice for a limited period. This may include preproduction runs, prototype series, and the subsequent production of single part requirement or simply small series production. It is often uneconomical to purchase a crimp tool or to rent it on a long-term basis, when it is only required for a few weeks in the year. Our short-term rental service has applicators readily available for you, which you can return when complete with your rental period.
Your local TE Connectivity representative will gladly inform you about the availability of an appropriate applicator for your specific need.

Americas

USA – Harrisburg, PA
Tooling Sales
Phone: +1-888-777-5917
Phone: +1-717-810-2080
toolingsales@te.com

Technical Assistance
Phone: +1-800-722-1111
Phone: +1-717-986-3434

Canada
Rick Grawehr
Phone: +1-908-612-6499
richard.grawehr@te.com

Brazil
Mauricio Oliveira
Phone: +55-11-2103-6062
maolivei@te.com

Mexico – Mexico City
Tooling Assistance Center
Phone: +1-717-986-3434

For more detailed information please visit our websites: **www.tooling.te.com • www.tooling.te.com/europe • www.tooling.te.com/china**

All specifications subject to change. Consult TE Connectivity for latest specifications.

Europe, Middle East, Africa and India

Austria
Phone: +43-1-90-560-0
gatd.at@te.com

Belarus - Russia - Ukraine
Phone: +7-910-452-3571
gatd.ru@te.com

Belgium - Netherlands - Luxemburg
Phone: +31-73-6246246
gatd.nl@te.com

Bulgaria - Hungary - Latvia
Lithuania - Poland - Romania
Phone: +48-601-522-935
gatd.pl@te.com

Czech - Slovakia
Phone: +420-541-162-150
gatd.cz@te.com

Denmark - Norway - Sweden
Phone: +46-8-50-72-50-00
gatd.se@te.com

Egypt - Ireland - United Kingdom
Phone: +44-1237-42-8657
gatd.gb@te.com

Finland - Estonia
Phone: +46-8-50-72-50-00
gatd.se@te.com

France - Morocco - Tunisia
Phone: +33-1-34-20-87-70
gatd.fr@te.com

Germany - Slovenia
Phone: +49-6251-133-1376
gatd.de@te.com

India - Middle East
Phone: +91-981-002-7244
gatd.in@te.com

Italy - Greece
Phone: +39-011-401-2272
gatd.it@te.com

Spain - Portugal
Phone: +34-93-291-03-96
gatd.sp@te.com

Switzerland
Phone: +41-71-447-02-84
gatd.ch@te.com

Turkey
Phone: +90-212-339-92-18
e.davasli@te.com

Product Information Center France
Phone: +33-134208943
Fax: +33-134208623
pic.france@te.com

Product Information Center Germany
Phone: +49-6251-133-1999
Fax. +49-6251-133-1998
germany-pic@te.com

Product Information Center Netherlands
Phone: +31-736246999
Fax: +31-736246931
picbenelux@te.com

Product Information Center Poland
Phone: +48-224576704
Fax: +48-224576720
jmatasz@te.com

Product Information Center Spain
Phone: +34-932910330
Fax: +34-932017879
pic.spain@te.com

For more detailed information please visit our websites: **www.tooling.te.com • www.tooling.te.com/europe • www.tooling.te.com/china**

Asia / Pacific

China

Beijing
Phone +86-10-65693488
Fax +86-10-65693208

Changchun
Phone +86-431-88964709
Fax +86-431-88961143

Hongkong
Phone +852-27351628
Fax +852-27350243

Shanghai
Phone +86-21-24071588
Fax +86-21-24071599

Shenzhen
Phone +86-755-25154700
Fax +86-755-25980416

Taibei
Phone +886-2-87682788
Fax +886-2-87681866

Wuhan
Phone +86-27-85778391
Fax +86-27-85778390

Others

Australia
Phone +61-2-95542612
Fax +61-2-9554-3859

Japan
Phone +81-44-900-5027
Fax +81-44-900-5037

Korea
Phone +82-2-3415-4636
Fax +82-2-3486-6873

Malaysia
Phone +60-3-7906-7688
Fax +60-3-7805-3066

Singapore
Phone +65-64164567
Fax +65-6482-1012

Thailand
Phone +66-2-834-6271
Fax +66-2-955-0515

All specifications subject to change. Consult TE Connectivity for latest specifications.

Numerical Index

Part Number	Page
0-0058589-1	1-18
0-0058589-1	1-19
0-0058590-1	1-18
0-0058590-1	1-19
0-0058591-1	1-18
0-0058591-1	1-19
0-0058593-1	1-22
0-0058594-1	1-21
0-0058594-1	1-22
0-0058595-1	1-21
0-0058595-1	1-22
0-0058596-1	1-21
0-0058596-1	1-22
0-0085188-1	5-20
0-0085188-9	5-20
0-0085189-1	5-20
0-0144930-1	5-6
0-0144930-1	5-7
0-0144934-1	5-6
0-0144934-2	5-6
0-0144935-1	5-6
0-0144935-1	5-11
0-0144935-1	5-12
0-0144935-1	5-13
0-0144935-1	5-14
0-0144935-1	5-15
0-0144935-1	5-16
0-0144936-1	4-4
0-0144936-1	4-32
0-0144936-1	5-6
0-0144950-1	4-32
0-0144951-1	4-32
0-0144951-2	4-32
0-0144951-3	4-32
0-0144951-4	4-32
0-0144952-1	4-32
0-0185180-1	4-32
0-0185226-1	5-6
0-0185226-1	5-7
0-0185226-1	5-12
0-0185226-2	5-12
0-0185226-3	5-12
0-0185226-4	5-12
0-0185300-1	4-4
0-0185300-1	4-10
0-0185300-1	4-11
0-0185300-1	4-12
0-0185300-1	4-13
0-0185308-1	3-5

Part Number	Page
0-0185308-2	3-5
0-0185308-3	3-5
0-0185308-4	3-5
0-0185309-1	3-5
0-0185309-1	3-12
0-0185311-1	3-33
0-0185311-1	3-44
0-0185311-1	3-45
0-0185311-1	3-46
0-0185311-1	3-47
0-0185311-1	3-48
0-0185311-1	3-49
0-0185341-1	4-4
0-0185341-2	4-4
0-0185343-1	4-4
0-0185343-2	4-4
0-0185454-1	5-6
0-0185454-1	5-7
0-0185458-1	4-29
0-0185526-1	4-20
0-0185526-2	4-20
0-0185526-3	4-20
0-0185534-1	5-6
0-0185534-1	5-7
0-0185534-1	5-16
0-0185534-2	5-16
0-0185534-3	5-16
0-0185534-4	5-16
0-0185680-1	4-29
0-0185683-1	4-29
0-0185683-1	4-36
0-0185683-2	4-36
0-0185730-1	3-12
0-0185740-1	4-3
0-0185740-1	4-4
0-0185740-1	4-12
0-0185740-2	4-12
0-0185740-3	4-4
0-0185740-3	4-12
0-0185875-1	5-7
0-0185875-1	5-12
0-0185875-1	5-13
0-0185875-1	5-14
0-0185875-1	5-15
0-0185875-1	5-16
0-0185879-1	5-7
0-0185879-2	5-7
0-0185879-3	5-7
0-0185879-4	5-7

Part Number	Page
0-0185890-1	5-6
0-0185890-1	5-7
0-0185890-1	5-14
0-0185890-2	5-14
0-0185904-1	5-6
0-0185904-1	5-7
0-0185904-1	5-16
0-0185904-2	5-16
0-0185904-3	5-16
0-0284126-1	5-36
0-0284126-1	5-37
0-0284126-2	5-36
0-0284126-2	5-37
0-0284134-1	4-39
0-0284134-1	4-40
0-0284134-5	5-34
0-0284134-6	5-34
0-0284136-1	4-31
0-0284136-2	4-31
0-0284137-1	5-36
0-0284137-1	5-37
0-0284152-1	5-39
0-0284152-2	5-39
0-0284223-3	5-2
0-0284223-4	5-2
0-0284223-5	5-2
0-0284223-6	5-2
0-0284223-7	5-2
0-0284224-1	5-3
0-0284224-2	5-3
0-0284224-5	5-3
0-0284224-6	5-3
0-0284229-1	5-39
0-0284229-2	5-39
0-0284272-1	7-8
0-0284272-9	7-8
0-0284316-1	5-39
0-0284317-1	5-34
0-0284317-1	5-35
0-0284317-2	5-34
0-0284317-2	5-35
0-0284321-1	4-5
0-0284322-1	4-5
0-0284422-1	5-25
0-0284423-3	5-23
0-0284423-4	5-23
0-0284423-5	5-23
0-0284423-6	5-23
0-0284423-7	5-23

Numerical Index

Part Number	Page
0-0953442-3	3-33
0-0953442-3	3-47
0-0953442-4	3-33
0-0953442-4	3-47
0-0953444-1	3-33
0-0953444-1	3-48
0-0953444-2	3-48
0-0953466-1	4-31
0-0953466-1	4-39
0-0953466-2	4-31
0-0953466-2	4-39
0-0953472-1	5-6
0-0953472-1	5-7
0-0953472-1	5-15
0-0953472-2	5-15
0-0953486-1	5-32
0-0953486-2	5-32
0-0953512-1	6-8
0-0953512-9	6-8
0-0953520-1	6-11
0-0953520-8	6-11
0-0953599-1	5-34
0-0953599-1	5-35
0-0953599-1	5-36
0-0953599-1	5-37
0-0953697-1	3-6
0-0953697-1	3-9
0-0953697-2	3-6
0-0953697-2	3-9
0-0953697-3	3-6
0-0953697-3	3-9
0-0953697-4	3-6
0-0953697-4	3-9
0-0953697-5	3-6
0-0953697-5	3-9
0-0953697-6	3-6
0-0953697-6	3-9
0-0953698-1	3-6
0-0953698-1	3-9
0-0953698-2	3-6
0-0953698-2	3-9
0-0953698-3	3-6
0-0953698-3	3-9
0-0953698-4	3-6
0-0953698-4	3-9
0-0953698-5	3-6
0-0953698-5	3-9
0-0953698-6	3-6
0-0953698-6	3-9

Part Number	Page
0-0953736-1	5-6
0-0953736-1	5-7
0-0953736-1	5-11
0-0953736-2	5-7
0-0953736-2	5-11
0-0953736-3	5-7
0-0953736-3	5-11
0-0953736-4	5-7
0-0953736-4	5-11
0-0953736-5	5-11
0-0953892-1	4-23
0-0953892-1	4-25
0-0953893-1	4-23
0-0953893-1	4-25
0-0963142-1	1-11
0-0963142-1	1-16
0-0963142-2	1-11
0-0963142-2	1-16
0-0963143-1	1-11
0-0963143-1	1-16
0-0965383-1	3-56
0-0965413-1	3-37
0-0965601-2	3-55
0-0965601-2	3-59
0-0966658-1	5-22
0-0966658-1	5-28
0-0966658-2	5-22
0-0966658-2	5-28
0-0966870-1	4-24
0-0966870-1	4-26
0-0967056-1	1-11
0-0967056-1	1-16
0-0967067-1	1-11
0-0967067-1	1-16
0-0967067-2	1-11
0-0967067-2	1-16
0-0967250-1	4-1
0-0967250-1	4-8
0-0967267-1	5-19
0-0967279-1	3-7
0-0967279-1	3-11
0-0967279-4	3-7
0-0967279-4	3-11
0-0967289-1	4-14
0-0967290-1	4-46
0-0967290-2	4-46
0-0967321-1	4-41
0-0967439-1	6-14
0-0967439-1	6-15

Part Number	Page
0-0967439-1	6-18
0-0967598-1	5-27
0-0967598-4	5-27
0-0967607-1	1-23
0-0967608-1	1-23
0-0967609-1	1-20
0-0967610-1	1-20
0-0967618-1	4-43
0-0967618-2	4-43
0-0967618-3	4-43
0-0967618-4	4-43
0-0967646-1	4-18
0-0967646-2	4-18
0-0967646-3	4-18
0-0967646-6	4-18
0-0967646-9	4-18
0-0967652-1	1-23
0-0967653-1	1-20
0-0967657-1	6-15
0-0967741-1	3-68
0-0967741-2	3-68
0-0968072-2	1-21
0-0968073-2	1-21
0-0968074-2	1-18
0-0968074-5	1-18
0-0968075-2	1-18
0-0968075-5	1-18
0-0968119-2	1-18
0-0968119-4	1-18
0-0968119-5	1-18
0-0968120-2	1-18
0-0968120-5	1-18
0-0968121-2	1-21
0-0968121-4	1-21
0-0968122-2	1-21
0-0968122-4	1-21
0-0968131-2	1-22
0-0968132-2	1-22
0-0968133-2	1-22
0-0968134-2	1-22
0-0968136-2	1-19
0-0968136-5	1-19
0-0968137-2	1-19
0-0968137-5	1-19
0-0968138-2	1-19
0-0968138-5	1-19
0-0968139-2	1-19
0-0968139-5	1-19
0-0968220-6	1-7

Part Number	Page
0-0968221-6	1-7
0-0968265-1	5-21
0-0968265-1	5-27
0-0968473-1	4-2
0-0968473-1	4-9
0-0968678-2	1-18
0-0968678-5	1-18
0-0968679-2	1-19
0-0968679-5	1-19
0-0968680-2	1-18
0-0968680-5	1-18
0-0968681-2	1-19
0-0968681-5	1-19
0-0968685-1	4-49
0-0968987-1	1-6
0-0969587-1	3-64
0-0969682-1	3-53
0-1238043-0	1-5
0-1238043-0	1-7
0-1238043-0	1-9
0-1238043-0	1-10
0-1238051-0	1-5
0-1238051-0	1-7
0-1238051-0	1-9
0-1238051-0	1-10
0-1241434-1	5-56
0-1241434-1	7-3
0-1241434-1	7-12
0-1241434-2	5-56
0-1241434-3	5-56
0-1241601-2	1-21
0-1241602-2	1-21
0-1241603-1	1-14
0-1241605-1	1-14
0-1241608-1	1-14
0-1241614-2	1-22
0-1241615-2	1-22
0-1241634-1	3-19
0-1241634-2	3-19
0-1241634-3	3-19
0-1241637-1	3-51
0-1241637-2	3-51
0-1241719-1	5-1
0-1241724-1	5-26
0-1241724-2	5-26
0-1241726-1	5-1
0-1241727-1	5-44
0-1241729-1	5-5
0-1241765-2	5-41

Numerical Index

Part Number	Page
0-0284438-1	5-34
0-0284442-1	4-6
0-0284443-1	4-6
0-0284443-2	4-6
0-0284443-3	4-6
0-0284443-4	4-6
0-0284443-5	4-6
0-0284443-6	4-6
0-0284520-1	5-34
0-0284520-1	5-35
0-0284522-1	4-40
0-0284582-1	4-40
0-0284703-1	6-7
0-0284714-1	5-3
0-0284714-2	5-3
0-0284714-3	5-3
0-0284714-4	5-3
0-0284715-1	5-25
0-0284726-1	7-6
0-0284742-1	7-5
0-0284742-2	7-5
0-0284743-1	7-14
0-0284743-2	7-14
0-0284802-1	3-34
0-0284802-2	3-34
0-0284803-1	3-63
0-0284869-1	3-54
0-0284869-1	3-58
0-0284972-1	5-47
0-0284972-1	5-48
0-0284972-2	5-47
0-0284972-2	5-48
0-0284975-1	5-47
0-0284975-1	5-48
0-0284975-2	5-47
0-0284975-2	5-48
0-0284976-1	5-37
0-0284977-1	4-51
0-0284979-1	4-27
0-0284999-3	5-24
0-0284999-4	5-24
0-0284999-5	5-24
0-0284999-6	5-24
0-0284999-7	5-24
0-0368146-1	5-54
0-0368146-1	7-11
0-0368146-2	5-54
0-0368146-2	7-11
0-0368146-3	5-54

Part Number	Page
0-0368146-3	7-11
0-0368213-1	5-46
0-0368213-5	5-46
0-0368231-1	5-46
0-0368231-5	5-46
0-0368233-1	5-46
0-0368290-1	7-13
0-0368291-1	7-13
0-0368293-1	7-13
0-0368294-1	7-13
0-0368297-1	7-13
0-0368312-1	3-14
0-0368319-1	7-2
0-0368322-1	7-2
0-0368323-1	7-2
0-0368333-1	7-10
0-0368376-1	5-54
0-0368376-1	7-11
0-0368376-2	7-11
0-0368376-3	7-11
0-0368376-4	7-11
0-0368382-1	7-11
0-0368382-1	7-12
0-0368383-1	7-4
0-0368383-2	7-4
0-0368383-3	7-4
0-0368383-4	7-4
0-0368388-1	7-3
0-0368388-1	7-4
0-0368389-1	7-11
0-0368389-2	7-11
0-0368434-1	7-9
0-0368434-2	7-9
0-0539635-1	1-5
0-0539635-1	1-7
0-0539635-1	1-9
0-0539635-1	1-10
0-0539635-1	1-14
0-0539682-2	1-5
0-0539682-2	1-7
0-0539682-2	1-9
0-0539682-2	1-10
0-0539685-2	1-5
0-0539685-2	1-10
0-0539692-2	1-14
0-0539692-2	1-15
0-0539693-2	1-14
0-0539711-1	1-18
0-0539711-1	1-19

Part Number	Page
0-0539712-1	1-18
0-0539712-1	1-19
0-0585891-1	1-18
0-0929051-1	4-2
0-0929053-1	5-21
0-0929053-2	5-21
0-0929387-1	1-6
0-0936119-1	3-16
0-0936119-1	3-22
0-0936119-1	3-25
0-0936119-2	3-16
0-0936119-2	3-22
0-0936119-2	3-25
0-0936121-1	3-16
0-0936121-1	3-22
0-0936121-1	3-24
0-0936121-2	3-16
0-0936121-2	3-22
0-0936121-2	3-24
0-0936124-1	4-21
0-0936124-1	4-22
0-0936124-2	4-21
0-0936124-2	4-22
0-0936126-1	4-21
0-0936126-1	4-22
0-0936126-2	4-21
0-0936126-2	4-22
0-0936274-1	7-10
0-0936287-2	3-32
0-0936287-2	3-43
0-0936289-2	3-32
0-0936289-5	3-32
0-0936289-5	3-43
0-0936399-1	3-16
0-0936399-1	3-25
0-0936399-5	3-16
0-0936399-5	3-25
0-0936640-2	3-52
0-0936640-3	3-52
0-0953002-1	5-18
0-0953118-1	5-40
0-0953118-8	5-40
0-0953119-1	5-38
0-0953119-2	5-38
0-0953122-1	5-38
0-0953122-2	5-38
0-0953122-3	5-38
0-0953122-4	5-38
0-0953122-5	5-38

Part Number	Page
0-0953122-6	5-38
0-0953122-7	5-38
0-0953122-8	5-38
0-0953130-1	4-3
0-0953130-1	4-4
0-0953130-1	4-10
0-0953130-2	4-10
0-0953130-3	4-4
0-0953130-3	4-10
0-0953221-1	5-33
0-0953222-1	5-33
0-0953236-1	5-6
0-0953236-1	5-7
0-0953236-1	5-13
0-0953236-2	5-13
0-0953264-1	4-29
0-0953264-1	4-45
0-0953264-2	4-45
0-0953302-1	4-29
0-0953302-1	4-34
0-0953302-2	4-34
0-0953302-3	4-34
0-0953363-1	3-33
0-0953363-1	3-46
0-0953363-2	3-46
0-0953363-3	3-33
0-0953363-3	3-46
0-0953363-4	3-46
0-0953381-1	3-33
0-0953382-0	3-45
0-0953382-0	3-46
0-0953382-0	3-47
0-0953382-0	3-48
0-0953382-1	3-33
0-0953382-2	3-33
0-0953382-3	3-33
0-0953382-4	3-33
0-0953440-1	3-33
0-0953440-1	3-49
0-0953440-2	3-33
0-0953440-2	3-49
0-0953440-3	3-33
0-0953440-3	3-49
0-0953440-4	3-33
0-0953440-4	3-49
0-0953442-1	3-33
0-0953442-1	3-47
0-0953442-2	3-33
0-0953442-2	3-47

All specifications subject to change. Consult TE Connectivity for latest specifications.

Numerical Index

Part Number	Page
0-1355081-1	3-38
0-1355081-2	3-38
0-1355081-3	3-38
0-1355081-4	3-38
0-1355082-1	3-38
0-1355082-2	3-38
0-1355082-3	3-38
0-1355082-4	3-38
0-1355082-5	3-38
0-1355171-1	5-56
0-1355171-2	5-56
0-1355172-1	5-56
0-1355348-1	4-30
0-1355348-1	4-33
0-1355348-1	4-37
0-1355348-1	4-38
0-1355505-1	4-2
0-1355505-1	4-9
0-1355505-3	4-9
0-1355505-4	4-9
0-1355541-1	5-26
0-1355541-2	5-26
0-1355543-1	5-5
0-1355543-1	5-44
0-1355543-2	5-44
0-1355553-1	1-14
0-1355556-1	1-14
0-1355717-1	1-5
0-1355717-5	1-5
0-1355719-1	1-10
0-1355719-2	1-10
0-1355950-2	1-18
0-1355964-2	1-19
0-1376234-1	6-12
0-1376235-1	6-12
0-1376235-2	6-12
0-1379029-1	3-20
0-1379029-2	3-20
0-1379029-3	3-20
0-1379029-4	3-20
0-1379029-5	3-20
0-1379029-6	3-20
0-1379030-1	4-3
0-1379030-1	4-13
0-1379030-3	4-4
0-1379030-3	4-13
0-1379040-1	4-42
0-1379046-1	5-23
0-1379046-1	5-50

Part Number	Page
0-1379046-2	5-50
0-1379046-3	5-50
0-1379046-4	5-50
0-1379046-5	5-50
0-1379095-1	4-3
0-1379095-2	4-3
0-1379096-1	4-3
0-1379096-2	4-3
0-1379096-3	4-3
0-1379100-1	4-29
0-1379100-2	4-29
0-1379101-1	4-29
0-1379101-2	4-29
0-1379102-1	4-29
0-1379102-1	4-34
0-1379102-1	4-35
0-1379102-1	4-36
0-1379114-1	4-3
0-1379114-1	4-4
0-1379114-1	4-11
0-1379114-2	4-11
0-1379114-3	4-4
0-1379114-3	4-11
0-1379118-1	3-33
0-1379118-1	3-44
0-1379118-2	3-33
0-1379118-2	3-44
0-1379118-3	3-33
0-1379118-3	3-44
0-1379118-4	3-33
0-1379118-4	3-44
0-1379165-1	3-27
0-1379165-3	3-27
0-1379165-7	3-27
0-1379219-1	4-3
0-1379219-1	4-10
0-1379219-1	4-11
0-1379219-1	4-12
0-1379219-1	4-13
0-1379640-2	4-19
0-1379640-3	4-19
0-1379729-1	6-13
0-1379729-2	6-13
0-1379731-1	4-29
0-1379731-1	4-35
0-1379731-2	4-35
0-1379731-3	4-35
0-1379799-1	6-15
0-1379799-2	6-15

Part Number	Page
0-1379816-1	3-33
0-1379816-1	3-45
0-1379816-3	3-33
0-1379816-3	3-45
0-1379816-4	3-33
0-1379816-4	3-45
0-1379913-1	4-48
0-1379913-2	4-48
0-1394005-1	3-39
0-1418776-1	3-30
0-1418776-2	3-30
0-1418939-1	5-49
0-1418939-9	5-49
0-1420000-1	5-22
0-1420000-1	5-28
0-1420001-1	5-22
0-1420001-1	5-28
0-1426108-0	1-5
0-1426108-0	1-10
0-1426123-0	1-5
0-1426123-0	1-10
0-1426196-0	1-14
0-1426196-0	1-15
0-1426259-0	1-18
0-1426259-0	1-19
0-1426313-0	1-21
0-1426402-0	1-5
0-1426402-0	1-10
0-1426403-0	1-14
0-1438992-1	3-29
0-1438992-2	3-29
0-1438992-3	3-29
0-1438992-4	3-29
0-1438992-5	3-29
0-1452128-1	1-10
0-1452158-1	1-14
0-1452349-1	3-65
0-1452368-1	5-30
0-1452690-1	5-5
0-1452999-1	7-1
0-1456736-1	5-17
0-1456736-2	5-17
0-1456736-3	5-17
0-1473244-1	7-12
0-1473247-1	7-12
0-1473250-1	7-12
0-1473252-1	7-3
0-1473255-1	7-3
0-1488973-1	3-67

Part Number	Page
0-1488973-2	3-67
0-1530107-6	1-4
0-1534027-1	3-1
0-1534027-1	3-3
0-1534100-1	4-7
0-1534100-1	4-8
0-1534101-1	4-26
0-1534102-1	4-47
0-1534112-1	3-1
0-1534112-1	3-3
0-1534125-1	3-64
0-1534131-1	3-17
0-1534131-1	3-23
0-1534149-1	3-17
0-1534149-1	3-23
0-1534193-0	4-7
0-1534196-0	4-7
0-1534222-1	5-22
0-1534222-1	5-28
0-1534222-2	5-22
0-1534222-2	5-28
0-1534346-1	5-44
0-1534346-2	5-44
0-1534346-3	5-44
0-1534841-1	4-7
0-1563872-1	6-21
0-1563872-2	6-21
0-1563872-3	6-21
0-1565416-1	5-55
0-1565422-1	5-55
0-1579001-4	1-6
0-1599178-1	4-52
0-1599180-1	5-36
0-1599644-1	4-28
0-1703032-1	1-8
0-1703032-5	1-8
0-1703874-1	3-41
0-1718162-1	5-41
0-1718162-3	5-41
0-1719532-1	1-8
0-1719532-5	1-8
0-1719545-1	1-8
0-1719545-5	1-8
0-1743156-1	3-15
0-1743156-2	3-15
0-1743164-1	3-8
0-1743164-2	3-8
0-1743218-5	3-26
0-1743277-2	7-4

All specifications subject to change. Consult TE Connectivity for latest specifications.

Numerical Index

Part Number	Page
0-1743282-1	3-57
0-1743284-1	3-61
0-1743386-1	3-62
0-1745000-1	3-58
0-1745000-3	3-54
0-1745000-4	3-54
0-1745010-1	7-6
0-1745034-1	5-4
0-1745034-2	5-4
0-1745034-3	5-4
0-1745034-4	5-4
0-1745034-5	5-4
0-1745060-1	5-43
0-1801040-1	5-10
0-1801041-1	5-10
0-1801065-1	4-44
0-1801065-2	4-44
0-1801263-1	7-1
0-1801268-1	7-1
0-1801269-1	7-1
0-1801269-2	7-1
0-1801317-1	5-45
0-1801317-4	5-45
0-1801317-6	5-45
0-1801317-9	5-45
0-1801434-1	4-15
0-1801434-2	4-15
0-1897344-2	5-8
0-1897352-2	5-8
0-1897355-3	5-8
0-1976156-1	1-4
0-1976157-1	1-4
0-2063041-1	1-5
0-2063041-1	1-7
0-2063041-1	1-9
0-2063041-1	1-10
0-2063433-1	1-14
0-2063433-1	1-15
0-2063525-1	1-5
0-2063525-1	1-7
0-2063529-1	1-5
0-2063529-1	1-10
0-2063530-1	1-5
0-2063530-1	1-10
0-2063563-1	1-14
0-2063576-1	1-5
0-2063576-1	1-10
0-2112593-1	6-4
0-2112593-2	6-4

Part Number	Page
0-2112594-1	6-3
0-2112594-2	6-3
0-2141466-1	6-2
0-2141467-1	6-1
0-2141467-2	6-1
0-2141467-3	6-1
0-2141576-1	2-5
0-2141576-1	2-13
0-2141576-1	2-9
0-2141576-2	2-5
0-2141576-2	2-13
0-2141576-2	2-9
0-2141576-3	2-5
0-2141576-3	2-13
0-2141576-3	2-9
0-2141576-4	2-5
0-2141576-4	2-13
0-2141576-4	2-9
0-2177367-0	2-4
0-2177367-1	2-4
0-2177367-2	2-4
0-2177367-3	2-4
0-2177367-3	2-12
0-2177370-0	2-3
0-2177370-1	2-3
0-2177370-2	2-3
0-2177370-3	2-3
0-2177370-3	2-11
0-2177372-0	2-2
0-2177372-1	2-2
0-2177372-2	2-2
0-2177372-3	2-2
0-2177372-3	2-10
0-2177419-0	2-5
0-2177419-1	2-5
0-2177419-2	2-5
0-2177419-3	2-5
0-2177419-3	2-13
0-2177586-1	2-2
0-2177586-1	2-6
0-2177586-1	2-10
0-2177586-2	2-2
0-2177586-2	2-6
0-2177586-2	2-10
0-2177586-3	2-2
0-2177586-3	2-6
0-2177586-3	2-10
0-2177586-4	2-2
0-2177586-4	2-6

Part Number	Page
0-2177586-4	2-10
0-2177587-1	2-3
0-2177587-1	2-7
0-2177587-1	2-11
0-2177587-2	2-3
0-2177587-2	2-7
0-2177587-2	2-11
0-2177587-3	2-3
0-2177587-3	2-7
0-2177587-3	2-11
0-2177587-4	2-3
0-2177587-4	2-7
0-2177587-4	2-11
0-2177588-1	2-4
0-2177588-1	2-8
0-2177588-1	2-12
0-2177588-2	2-4
0-2177588-2	2-8
0-2177588-2	2-12
0-2177588-3	2-4
0-2177588-3	2-8
0-2177588-3	2-12
0-2177588-4	2-4
0-2177588-4	2-8
0-2177588-4	2-12
0-2177748-3	2-13
0-2177748-3	2-9
0-2177766-0	2-8
0-2177766-1	2-8
0-2177766-2	2-8
0-2177766-3	2-8
0-2177766-3	2-12
0-2177767-0	2-7
0-2177767-1	2-7
0-2177767-2	2-7
0-2177767-3	2-7
0-2177767-3	2-11
0-2177768-0	2-6
0-2177768-1	2-6
0-2177768-2	2-6
0-2177768-3	2-6
0-2177768-3	2-10
1-0085188-1	5-20
1-0085188-2	5-20
1-0085188-5	5-20
1-0085188-9	5-20
1-0185226-3	5-12
1-0185226-4	5-12
1-0185740-2	4-12

Part Number	Page
1-0185904-2	5-16
1-0284272-0	7-8
1-0284272-9	7-8
1-0368213-2	5-46
1-0368213-9	5-46
1-0368231-2	5-46
1-0368231-9	5-46
1-0368434-1	7-9
1-0368434-2	7-9
1-0936119-2	3-25
1-0936124-2	4-21
1-0953118-3	5-40
1-0953118-4	5-38
1-0953118-4	5-40
1-0953119-3	5-38
1-0953119-3	5-40
1-0953119-4	5-38
1-0953119-4	5-40
1-0953264-1	4-45
1-0953264-2	4-45
1-0953472-1	5-15
1-0953472-2	5-15
1-0953892-1	4-23
1-0953892-1	4-25
1-0953893-1	4-23
1-0953893-1	4-25
1-0962692-2	4-30
1-0962692-2	4-33
1-0963539-1	4-30
1-0963539-1	4-38
1-0963539-2	4-38
1-0963540-1	4-38
1-0967361-3	6-21
1-0967570-1	6-5
1-0967570-1	6-9
1-0967582-1	4-16
1-0967584-1	6-14
1-0967584-1	6-15
1-0967584-1	6-16
1-0967584-3	6-16
1-0967587-3	6-20
1-0967587-3	6-22
1-0967598-1	5-27
1-0967598-4	5-27
1-0967598-5	5-21
1-0967598-5	5-27
1-0967616-1	6-20
1-0967616-2	6-20
1-0967616-3	6-22

Numerical Index

Part Number	Page
1-0967640-1	6-14
1-0967640-1	6-16
1-0967640-1	6-17
1-0967640-1	6-18
1-0967640-1	6-19
1-0967642-1	6-10
1-0967644-1	6-6
1-0967646-1	4-18
1-0967657-1	6-14
1-0967657-1	6-19
1-0967658-1	3-60
1-0967742-1	5-31
1-0968291-2	3-34
1-0968322-1	5-42
1-0968325-3	5-9
1-0968326-1	5-9
1-0968636-2	3-66
1-0968684-1	4-49
1-0968696-3	3-21
1-0968699-1	3-2
1-0968699-1	3-4
1-0968700-1	3-7
1-0968700-1	3-10
1-0968720-1	5-29
1-0968720-2	5-29
1-0968720-3	5-29
1-0968811-4	6-17
1-1241370-3	3-36
1-1355035-1	5-41
1-1355154-1	4-30
1-1355154-1	4-37
1-1355350-1	4-30
1-1355897-1	3-28
1-1379165-3	3-27
1-1379165-5	3-27
1-1379165-6	3-27
1-1379913-1	4-48
1-1379913-2	4-48
1-1394067-1	4-50
1-1394155-4	5-42
1-1394172-1	3-50
1-1418463-9	6-5
1-1418463-9	6-9
1-1418775-1	3-30
1-1418778-1	3-31
1-1418784-1	3-40
1-1418939-1	5-49
1-1418939-9	5-49
1-1452058-1	1-15

Part Number	Page
1-1452350-1	1-15
1-1452368-1	5-30
1-1452368-4	5-30
1-1534013-1	3-55
1-1534095-1	4-47
1-1534096-1	4-1
1-1534096-2	4-1
1-1534097-1	4-24
1-1534097-2	4-24
1-1534099-1	4-47
1-1534113-1	3-1
1-1534113-1	3-3
1-1534150-1	3-17
1-1534150-1	3-23
1-1534155-1	3-1
1-1534155-1	3-3
1-1534157-1	3-17
1-1534157-1	3-23
1-1534171-1	3-64
1-1534229-1	6-23
1-1534840-1	4-7
1-1563872-1	6-21
1-1564011-2	3-42
1-1564012-3	3-55
1-1564012-3	3-59
1-1564013-1	3-59
1-1703930-1	1-4
1-1703930-2	1-4
1-1703938-1	5-51
1-1703938-1	5-52
1-1703941-1	5-51
1-1703942-1	5-51
1-1718333-1	3-2
1-1718333-1	3-4
1-1718346-1	3-7
1-1718346-1	3-10
1-1718346-1	3-11
1-1718346-3	3-7
1-1719039-7	4-17
1-1743218-3	3-26
1-1743282-2	3-57
1-1743282-3	3-57
1-1743282-6	3-57
1-1743284-2	3-61
1-1743284-3	3-61
1-1743284-6	3-61
1-1743336-1	5-52
1-1743336-9	5-52
1-1743386-2	3-62

Part Number	Page
1-1743386-3	3-62
1-1743386-6	3-62
1-1801065-1	4-44
1-1801065-2	4-44
1-1801263-1	7-1
1-2112449-1	1-4
1-2112449-2	1-4
1-2177367-3	2-12
1-2177367-3	2-4
1-2177370-3	2-11
1-2177370-3	2-3
1-2177372-3	2-10
1-2177372-3	2-2
1-2177419-3	2-13
1-2177419-3	2-5
1-2177748-3	2-13
1-2177748-3	2-9
1-2177766-3	2-12
1-2177766-3	2-8
1-2177767-3	2-11
1-2177767-3	2-7
1-2177768-3	2-10
1-2177768-3	2-6
2-0085188-1	5-20
2-0085188-9	5-20
2-0284272-0	7-8
2-0284272-3	7-8
2-0284272-7	7-8
2-0284272-9	7-8
2-0953892-1	4-23
2-0953892-1	4-25
2-0953893-1	4-23
2-0953893-1	4-25
2-0962692-2	4-30
2-0962692-2	4-33
2-0967361-3	6-21
2-0967587-3	6-22
2-0967616-1	6-20
2-0967640-1	6-14
2-0967642-1	6-10
2-0967642-2	6-10
2-0967644-1	6-6
2-0968291-2	3-34
2-0968322-1	5-42
2-0968326-1	5-9
2-0968636-2	3-66
2-0968696-3	3-21
2-0968699-1	3-2
2-0968699-1	3-4

Part Number	Page
2-0968700-1	3-7
2-0968700-1	3-10
2-0968720-2	5-29
2-1241370-3	3-36
2-1355154-1	4-30
2-1355154-1	4-37
2-1355350-1	4-30
2-1394067-1	4-50
2-1418939-1	5-49
2-1418939-9	5-49
2-1534229-1	6-23
2-1534229-2	6-23
2-1564011-2	3-42
2-1703930-1	1-4
2-1703930-2	1-4
2-1703938-1	5-51
2-1703938-1	5-52
2-1703941-1	5-51
2-1718333-1	3-2
2-1718333-1	3-4
2-1718346-1	3-7
2-1718346-1	3-10
2-1743336-1	5-52
2-1743336-9	5-52
2-2112449-1	1-4
2-2112449-2	1-4
2-2112594-1	6-3
2-2112594-2	6-3
2-2177367-3	2-12
2-2177367-3	2-4
2-2177370-3	2-11
2-2177370-3	2-3
2-2177372-3	2-10
2-2177372-3	2-2
2-2177419-3	2-13
2-2177419-3	2-5
2-2177748-3	2-13
2-2177748-3	2-9
2-2177766-3	2-12
2-2177766-3	2-8
2-2177767-3	2-11
2-2177767-3	2-7
2-2177768-3	2-10
2-2177768-3	2-6
3-0284272-0	7-8
3-0284272-7	7-8
3-0953892-1	4-23
3-0953892-1	4-25
3-0953893-1	4-23

All specifications subject to change. Consult TE Connectivity for latest specifications.

Numerical Index

Part Number	Page
3-0953893-1	4-25
3-0967616-1	6-20
3-0967618-1	4-43
3-0967618-2	4-43
3-0967644-1	6-6
3-0968636-2	3-66
3-0968696-2	3-18
3-0968696-2	3-21
3-0968700-1	3-7
3-0968700-1	3-10
3-1355154-1	4-30
3-1355154-1	4-37
3-1355397-3	3-18
3-1355397-3	3-21
3-1418939-1	5-49
3-1418939-9	5-49
3-1534903-1	7-7
3-1534903-2	7-7
3-1534903-3	7-7
3-1534903-5	7-7
3-1534904-1	7-15
3-1534904-2	7-15
3-1534904-3	7-15
3-1534904-4	7-15
3-1534904-5	7-15
3-1579001-5	1-5
3-1579001-5	1-7
3-1718333-1	3-2
3-1718346-1	3-7
3-1718346-1	3-10
3-1743336-1	5-52
3-1743336-9	5-52
3-2112594-1	6-3
3-2112594-2	6-3
3-2177367-3	2-12
3-2177367-3	2-4
3-2177370-3	2-11
3-2177370-3	2-3
3-2177372-3	2-10
3-2177372-3	2-2
3-2177419-3	2-13
3-2177419-3	2-5
3-2177748-3	2-13
3-2177766-3	2-12
3-2177766-3	2-8
3-2177767-3	2-11
3-2177767-3	2-7
3-2177768-3	2-10
3-2177768-3	2-6

Part Number	Page
4-0284272-0	7-8
4-0953892-1	4-23
4-0953892-1	4-25
4-0953893-1	4-23
4-0953893-1	4-25
4-0968636-2	3-66
4-0968696-3	3-18
4-0968696-3	3-21
4-1718333-1	3-2
4-1718346-1	3-7
4-1718346-1	3-11
4-1743336-1	5-52
4-1743336-9	5-52
4-2112594-1	6-3
4-2112594-2	6-3
5-0928999-1	1-5
5-0928999-5	1-5
5-0928999-6	1-5
5-0962885-1	1-5
5-0962885-5	1-5
5-0962885-6	1-5
5-0962886-1	1-10
5-0962886-2	1-10
5-0963715-1	1-5
5-0963715-5	1-5
5-0963715-6	1-5
5-0963716-1	1-10
5-0963716-2	1-10
5-0965906-1	1-5
5-0965906-5	1-5
5-0965906-6	1-5
5-0965908-1	1-10
5-0965908-2	1-10
5-0967642-1	6-10
5-0968220-1	1-7
5-0968220-5	1-7
5-0968221-1	1-7
5-0968221-5	1-7
5-0968696-3	3-21
5-1241918-1	1-9
5-1241920-1	1-9
5-1355397-3	3-18
5-1355397-3	3-21
5-1355730-1	3-13
5-1579001-1	1-5
5-1579001-1	1-10
5-1579001-2	1-10
5-1743336-1	5-52
5-1743336-9	5-52

Part Number	Page
5-2112594-1	6-3
5-2112594-2	6-3
6-0928918-1	1-10
6-0928918-2	1-10
6-0967587-3	6-22
6-1379731-1	4-35
6-1379731-2	4-35
6-1743336-1	5-52
6-1743336-9	5-52
7-0967570-3	6-9
7-0967584-3	6-16
7-0967587-3	6-22
7-0967640-3	6-16
7-0967644-3	6-6
7-1743336-1	5-52
7-1743336-9	5-52
9-0965382-2	3-56
9-0968720-1	5-29
9-1534904-4	7-15
9-1718333-1	3-2
9-1718346-1	3-7

Engineering Notes

All specifications subject to change. Consult TE Connectivity for latest specifications.

Disclaimer

While TE has made every reasonable effort to ensure the accuracy of the information in this catalog, TE does not guarantee that it is error-free, nor does TE make any other representation, warranty or guarantee that the information is accurate, correct, reliable or current. TE reserves the right to make any adjustments to the information contained herein at any time without notice. TE expressly disclaims all implied warranties regarding the information contained herein, including, but not limited to, any implied warranties of merchantability or fitness for a particular purpose. The dimensions in this catalog are for reference purposes only and are subject to change without notice. Specifications are subject to change without notice. Consult TE for the latest dimensions and design specifications.

www.te.com
www.te.com/automotive
www.te.com/automotive/most

AMP, AMP 3/K-40, AMP 5/K-40, MQS, NanoMQS, Raychem, SOLARLOK, TE Connectivity and TE connectivity (logo) are trademarks.

MOST, TopWin, ALPHA and ZETA are trademarks.

Other products, logos and company names mentioned herein may be trademarks of their respective owners.

Copyright 2012. Tyco Electronics AMP GmbH a TE Connectivity Ltd. company, AMPèrestr. 12–14, 64625 Bensheim / Germany

Engineering Notes

All specifications subject to change. Consult TE Connectivity for latest specifications.

Americas

Argentina – Buenos Aires
Phone: +54-11-4733-2202
Fax: +54-11-4733-2250

Brasil – São Paulo
Phone: +55-11-2103-6105
Fax: +55-11-2103-6204

Chile – Santiago
Phone: +56-2-345-0300
Fax: +56-2-223-1477

Canada – Toronto
Phone: +1-905-475-6222
Fax: +1-905-474-5520
Product Information Center:
Phone: +1-905-470-4425
Fax: +1-905-474-5525

Colombia – Bogotá
(Venezuela/Ecuador)
Phone: +57-1-319-8999
Fax: +57-1-319-8989

Mexico – Mexico City
Phone: +52-55-1106-0800
+01-800-733-8926
Fax: +52-55-1106-0910

For Latin/South American Countries not shown
Phone: +54-11-4733-2015
Fax: +54-11-4733-2083

United States
Harrisburg, PA
Phone: +1-717-564-0100
Fax: +1-717-986-7575
Product Information Center:
Phone: +1-800-522-6752
Fax: +1-717-986-7575

Asia/Pacific

Australia – Sydney
Phone: +61-2-9554-2600
Fax: +61-2-9502-2556
Product Information Center:
Phone: +61-2-9840-8200
Fax: +61-2-9634-6188

Indonesia – Jakarta
Phone: +65-6482-0311
Fax: +65-6482-1012

Japan – Kawasaki, Kanagawa
Phone: +81-44-844-8111
Fax: +81-44-812-3207

Korea – Seoul
Phone: +82-2-3415-4500
Fax: +82-2-3486-3810

Malaysia – Kuala Lumpur
Phone: +60-3-7805-3055
Fax: +60-3-7805-3066

New Zealand – Auckland
Phone: +64-9-634-4580
Fax: +64-9-634-4586

Philippines – Makati City
Phone: +632-848-0171
Fax: +632-867-8661

People's Republic of China
Hong Kong
Phone: +852-2738-8731
Fax: +852-2735-0243

Shanghai
Phone: +86-21-2407-1588
Fax: +86-21-2407-1599

Singapore – Singapore
Phone: +65-6482-0311
Fax: +65-6482-1012

Taiwan – Taipei
Phone: +886-2-8768-2788
Fax: +886-2-8768-2268

Thailand – Bangkok
Phone: +66-2-955-0500
Fax: +66-2-955-0505

Vietnam – Ho Chi Minh City
Phone: +84-8-930-5546
Fax: +84-8-930-3443

Europe/Middle East/Africa

Austria – Vienna
Phone: +43-1-905-60-0
Fax: +43-1-905-60-1333
Product Information Center:
Phone: +43-1-905-60-1228
Fax: +43-1-905-60-1333

Belarus – Minsk
Phone: +375-17-237-47-94
Fax: +375-17-237-47-94
Product Information Center:
Phone: +7-495-790-7902
Fax: +7-495-721-1893

Belgium – Kessel-Lo
Phone: +31-73-6246-246
Fax: +31-73-6212-365
Product Information Center:
Phone: +31-73-6246-999
Fax: +31-73-6246-998

Bulgaria – Sofia
Phone: +359-2-971-2152
Fax: +359-2-971-2153

Czech Republic and Slovakia
Czech Republic – Kurim
Phone: +420-541-162-108
Fax: +420-541-162-104
Product Information Center:
Phone: +420-541-162-113
Fax: +420-541-162-104

Denmark – Glostrup
Phone: +45-43-48-04-00
Fax: +46-8-50-72-50-01
Product Information Center:
Phone: +46-8-50-72-50-20
Fax: +46-8-50-72-52-20

Egypt – Cairo
Phone: +20-2417-7647
Fax: +20-2419-2334

Estonia – Tartu
Phone: +372-5138-274
Fax: +372-7400-779

Finland – Helsinki
Phone: +358-95-12-34-20
Fax: +46-8-50-72-50-01
Product Information Center:
Phone: +46-8-50-72-50-20
Fax: +46-8-50-72-52-20

France – Cergy-Pontoise Cedex
Phone: +33-1-3420-8888
Fax: +33-1-3420-8800
Product Information Center:
Phone: +33-1-3420-8686
Fax: +33-1-3420-8623

France Export Divisions –
Cergy-Pontoise Cedex
Phone: +33-1-3420-8866
Fax: +33-1-3420-8300

Germany – Bensheim
Phone: +49-6251-133-0
Fax: +49-6251-133-1600
Product Information Center:
Phone: +49-6251-133-1999
Fax: +49-6251-133-1988

Greece – Athens
Phone: +30-210-9370-396/397
Fax: +30-210-9370-655

Hungary – Budapest
Phone: +36-1-289-1000
Fax: +36-1-289-1010
Product Information Center:
Phone: +36-1-289-1016
Fax: +36-1-289-1017

India – Bangalore
Phone: +91-80-2854-0800
Fax: +91-80-2854-0814

Italy – Collegno (Torino)
Phone: +39-011-4012-111
Fax: +39-011-4031-116
Product Information Center:
Phone: +39-011-4012-632
Fax: +39-011-4028-7632

Lithuania and Latvia
Lithuania – Vilnius
Phone: +370-5-213-1402
Fax: +370-5-213-1403

Netherlands – 's-Hertogenbosch
Phone: +31-73-6246-246
Fax: +31-73-6212-365
Product Information Center:
Phone: +31-73-6246-999
Fax: +31-73-6246-998

Norway – Nesbru
Phone: +47-66-77-88-50
Fax: +46-8-50-72-50-01
Product Information Center:
Phone: +46-8-50-72-50-20
Fax: +46-8-50-72-52-20

Poland – Warsaw
Phone: +48-22-4576-700
Fax: +48-22-4576-720
Product Information Center:
Phone: +48-22-4576-704
Fax: +48-22-4576-720

Romania – Bucharest
Phone: +40-21-311-3479/3596
Fax: +40-21-312-0574

Russia – Moscow
Phone: +7-495-790-7902
Fax: +7-495-721-1893
Product Information Center:
Phone: +7-495-790-7902
Fax: +7-495-721-1893

Russia – Yekaterinburg
Phone: +7-343-2531-153
Fax: +7-343-2531-152

Russia – Nizhniy Novgorod
Phone: +7-831-220-33-05/-06
Fax: +7-831-220-33-39/-40

Slovenia – Ljubljana
Phone: +386-1561-3270
Fax: +386-1561-3240

South Africa – Port Elizabeth
Phone: +27-41-503-4500
Fax: +27-41-581-0440

Spain – Barcelona
Phone: +34-93-291-0330
Fax: +34-93-201-7879
Product Information Center:
Phone: +34-93-291-0366
Fax: +34-93-209-1030

Sweden – Upplands Väsby
(Switchboard)
Phone: +46-8-50-72-50-00
Fax: +46-8-50-72-50-01
Product Information Center:
Phone: +46-8-50-72-50-20
Fax: +46-8-50-72-52-20

Switzerland – Steinach
Phone: +41-71-447-0447
Fax: +41-71-447-0444
Product Information Center:
Phone: +41-71-447-0447
Fax: +41-71-447-0400

Turkey – Istanbul
Phone: +90-212-281-8181/2/3
+90-212-282-5130/5430
Fax: +90-212-281-8184

Ukraine – Kiev
Phone: +380-44-206-2265
Fax: +380-44-206-2264
Product Information Center:
Phone: +380-44-206-2265
Fax: +380-44-206-2264

United Kingdom and Ireland – Swindon
Phone: +44-8706-080208
Fax: +44-208-954-6234
Product Information Center:
Phone: +44-800-267-666
Fax: +44-208-420-8095

Tyco Electronics AMP GmbH
a TE Connectivity Ltd. company
AMPèrestrasse 12–14
64625 Bensheim/Germany
Phone: +49 (0)6251 133-0
Fax: +49 (0)6251 133-1600

www.te.com
www.te.com/automotive
www.te.com/automotive/most

Tyco Electronics AMP GmbH certified
acc. ISO 14001 and ISO/TS 16949:2002

© 2012 Tyco Electronics AMP GmbH
1307999-3 | Revised 10-2012 | 4M · ST

AUTOMOTIVE