# 4PCV-10-006 ✔ ACTIVE

Buchanan | BUCHANAN 4 Series

TE Internal #: 1437649-5

10 Position Barrier Strip, Tri-Barrier, Printed Circuit Pin Bottom Termination, Wire-to-Board, 8.26 mm [.325 in] Centerline, 1 Row, BUCHANAN 4 Series

View on TE.com >

Connectors > Terminal Blocks & Strips > Barrier Strips

Barrier Strip Style: **Tri-Barrier**

Bottom Termination Type: **Printed Circuit Pin**

Connector System: **Wire-to-Board**

Number of Positions: **10**

Centerline (Pitch): **8.26 mm [ .325 in ]**

## Features

### Product Type Features

| | |
|---|---|
| Block Style | Flat Bottom with standoffs |
| Connector System | Wire-to-Board |
| Connector & Contact Terminates To | Printed Circuit Board |

### Configuration Features

| | |
|---|---|
| Number of Levels | 1 |
| Number of Positions | 10 |
| Number of Rows | 1 |

### Electrical Characteristics

| | |
|---|---|
| Operating Voltage | 150 V, 300 V |

### Body Features

| | |
|---|---|
| Primary Product Color | Black |
| Product Orientation | Vertical |
| Barrier Strip Style | Tri-Barrier |

## Contact Features

| | |
|---|---|
| Contact Base Material | Copper Alloy |
| PCB Contact Termination Area Plating Material | Tin |
| Contact Current Rating (Max) | 20 A |

## Termination Features

| | |
|---|---|
| Bottom Termination Type | Printed Circuit Pin |

## Mechanical Attachment

| | |
|---|---|
| Top Termination Type | Wire Clamp Combo Head |
| Mounting Options | None |
| Screw Plating Material | Zinc |
| Screw Material | Steel |
| Thread Size | 4-40 |
| Screw Head Type | Combo Phil-Slot |
| Connector Mounting Type | Board Mount |

## Housing Features

| | |
|---|---|
| Housing Material | Polyamide |
| Centerline (Pitch) | 8.26 mm[.325 in] |

## Dimensions

| | |
|---|---|
| Product Length | 83.95 mm[3.305 in] |
| Wire Size | 22 – 12 AWG |

## Operation/Application

| | |
|---|---|
| Circuit Application | Power |

## Industry Standards

| | |
|---|---|
| UL Flammability Rating | UL 94V-0 |

## Packaging Features

| | |
|---|---|
| Packaging Method | Package |
| Packaging Quantity | 140 |

## Product Compliance

For compliance documentation, visit the product page on TE.com>

| | |
|---|---|
| EU RoHS Directive 2011/65/EU | Compliant |
| EU ELV Directive 2000/53/EC | Compliant |

| | |
|---|---|
| China RoHS 2 Directive MIIT Order No 32, 2016 | 有害物质含量符合标准要求 No Restricted Substance(s) Above Threshold |
| EU REACH Regulation (EC) No. 1907/2006 | Current ECHA Candidate List: JUNE 2025 (250)<br>Candidate List Declared Against: JAN 2025 (247)<br>Does not contain REACH SVHC |
| Halogen Content | Low Halogen - Br, Cl, F < 900 ppm per homogenous material. Also BFR/CFR/PVC Free |
| Solder Process Capability | Wave solder capable to 265°C |

Product Compliance Disclaimer

This information is provided based on reasonable inquiry of our suppliers and represents our current actual knowledge based on the information they provided. This information is subject to change. The part numbers that TE has identified as EU RoHS compliant have a maximum concentration of 0.1% by weight in homogenous materials for lead, hexavalent chromium, mercury, PBB, PBDE, DBP, BBP, DEHP, DIBP, and 0.01% for cadmium, or qualify for an exemption to these limits as defined in the Annexes of Directive 2011/65/EU (RoHS2). Finished electrical and electronic equipment products will be CE marked as required by Directive 2011/65/EU. Components may not be CE marked. Additionally, the part numbers that TE has identified as EU ELV compliant have a maximum concentration of 0.1% by weight in homogenous materials for lead, hexavalent chromium, and mercury, and 0.01% for cadmium, or qualify for an exemption to these limits as defined in the Annexes of Directive 2000/53/EC (ELV). Regarding the REACH Regulation, the information TE provides on SVHC in articles for this part number is based on the latest European Chemicals Agency (ECHA) 'Guidance on requirements for substances in articles' posted at this URL: https://echa.europa.eu/guidance-documents/guidance-on-reach

## Also in the Series | BUCHANAN 4 Series

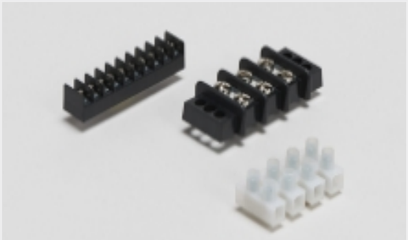

Barrier Strips(32)

## Customers Also Bought

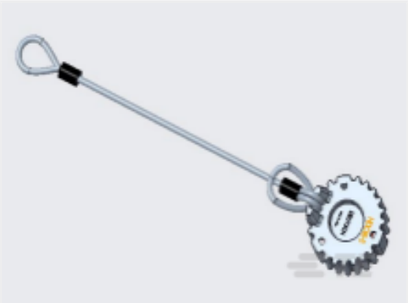

TE Part #HDC16-5-LA
DUST CAP, 5P, REC, GRY, LANYARD, HD10

TE Part #34112
SOLIS R 22-16COMM 22-18MIL 10

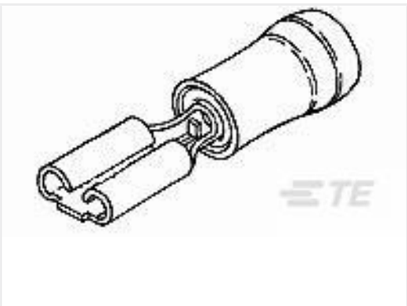

TE Part #60894-1
RECEPT,PIDG FASTON 22-18 110

TE Part #5-103635-6
07 MTE HDR SRRA LTCH.100CL LF

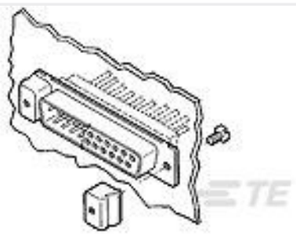

TE Part #208101-8
LATCH BLOCK (SZ 1-4)

TE Part #350689-7
UMNL SOK 24-18 AUBR L/P

TE Part #5-534237-2
04 MODII VRT SR CE 100/115

TE Part #3-1437653-5
6PCV-10-006=6PCV ASSEMBLY

TE Part #1658539-2
PIN CONT DUPL PLT STRIP HD-20

TE Part #1658613-3
15 POS HDF PLUG, MS, LEAD FREE

## Documents

### Product Drawings

4PCV-10-006=4PCV ASSEMBLY

English

### CAD Files

Customer View Model

ENG_CVM_CVM_1437649-5_T1.3d_stp.zip

English

Customer View Model

ENG_CVM_CVM_1437649-5_T1.3d_igs.zip

English

Customer View Model

ENG_CVM_CVM_1437649-5_T1.2d_dxf.zip

English

3D PDF

3D

By downloading the CAD file I accept and agree to the Terms and Conditions of use.

### Datasheets & Catalog Pages

1-1773458-2_BARRIER_STRIPS_QUICK_REFERENCE_GUIDE

English