# 474665-E ✔ ACTIVE

ERNI | M12 Connector

TE Internal #: 474665-E

Cable-to-Board, Circular Connector Receptacle, 4 Position, Printed Circuit Board, Power, Signal & High Speed Data, Board Mount, Code D, M12 Connector

View on TE.com >

Connectors > Circular Connectors > Standard Circular Connectors

Connector System: **Cable-to-Board**

Connector Mounting Type: **Board Mount**

Number of Positions: **4**

Sealable: **No**

Connector & Contact Terminates To: **Printed Circuit Board**

## Features

### Product Type Features

| | |
|---|---|
| Connector Product Type | Connector Assembly |
| Connector System | Cable-to-Board |
| Sealable | No |
| Connector & Contact Terminates To | Printed Circuit Board |
| Circular Connector Type | Circular Connector Receptacle |

### Configuration Features

| | |
|---|---|
| Number of Positions | 4 |
| Contacts Preloaded | Yes |

### Body Features

| | |
|---|---|
| Entry Style | Top |
| Environmental Protection | IP65, IP67 |

### Contact Features

| | |
|---|---|
| Contact Current Rating (Max) | 4 A |
| Reverse Gender | No |

| | |
|---|---|
| Circular Connector Contact Type | Socket |

### Termination Features

| | |
|---|---|
| Termination Method to PCB | Surface Mount |

### Mechanical Attachment

| | |
|---|---|
| Mating Alignment | With |
| PCB Mount Alignment | With |
| PCB Mount Retention | With |
| Connector Mounting Type | Board Mount |
| Polarization Code | D |
| Mating Alignment Type | Polarization |
| Mating Retention | Without |

### Dimensions

| | |
|---|---|
| Assembly Length | 17 mm |

### Usage Conditions

| | |
|---|---|
| IP Water Sealing Level | IP67 |
| Operating Temperature Range | -25 – 85 °C[-13 – 185 °F] |

### Operation/Application

| | |
|---|---|
| Durability Rating | 100 Cycles |
| Circuit Application | Power, Signal & High Speed Data |
| Shielded | No |

### Industry Standards

| | |
|---|---|
| UL Flammability Rating | UL 94V-0 |

## Product Compliance

For compliance documentation, visit the product page on TE.com>

| | |
|---|---|
| EU RoHS Directive 2011/65/EU | Compliant with Exemptions |
| EU ELV Directive 2000/53/EC | Not Yet Reviewed |
| China RoHS 2 Directive MIIT Order No 32, 2016 | 有害物质含量超出标准 Restricted Substance(s) Above Threshold |
| EU REACH Regulation (EC) No. 1907/2006 | Current ECHA Candidate List: FEB 2026 (253)<br>Candidate List Declared Against: JUNE 2025 (250)<br>SVHC > Threshold: |

| | |
|---|---|
| | Pb (3.5%)<br>Article Safe Usage Statements:<br>Do not eat, drink or smoke when using this product. Wash thoroughly after handling. Recycle if possible and dispose of the article by following all applicable governmental regulations relevant to your geographic location. |
| Halogen Content | Low Halogen - Br, Cl, F < 900 ppm per homogenous material. Also BFR/CFR/PVC Free |
| Solder Process Capability | Not reviewed for solder process capability |

Product Compliance Disclaimer

This information is provided based on reasonable inquiry of our suppliers and represents our current actual knowledge based on the information they provided. This information is subject to change. The part numbers that TE has identified as EU RoHS compliant have a maximum concentration of 0.1% by weight in homogenous materials for lead, hexavalent chromium, mercury, PBB, PBDE, DBP, BBP, DEHP, DIBP, and 0.01% for cadmium, or qualify for an exemption to these limits as defined in the Annexes of Directive 2011/65/EU (RoHS2). Finished electrical and electronic equipment products will be CE marked as required by Directive 2011/65/EU. Components may not be CE marked.Additionally, the part numbers that TE has identified as EU ELV compliant have a maximum concentration of 0.1% by weight in homogenous materials for lead, hexavalent chromium, and mercury, and 0.01% for cadmium, or qualify for an exemption to these limits as defined in the Annexes of Directive 2000/53/EC (ELV). Regarding the REACH Regulations, TE's information on SVHC in articles for this part number is still based on the European Chemical Agency (ECHA) 'Guidance on requirements for substances in articles'(Version: 2, April 2011), applying the 0.1% weight on weight concentration threshold at the finished product level. TE is aware of the European Court of Justice ruling of September 10th, 2015 also known as O5A (Once An Article Always An Article) stating that, in case of 'complex object', the threshold for a SVHC must be applied to both the product as a whole and simultaneously to each of the articles forming part of its composition. TE has evaluated this ruling based on the new ECHA "Guidance on requirements for substances in articles" (June 2017, version 4.0) and will be updating its statements accordingly.

## Compatible Parts

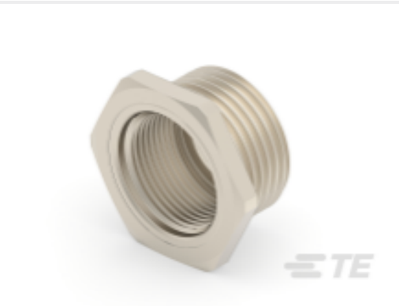

TE Part # 394847-E
M12 METAL SHELL, FEMALE, VERT, 13MM, C6A

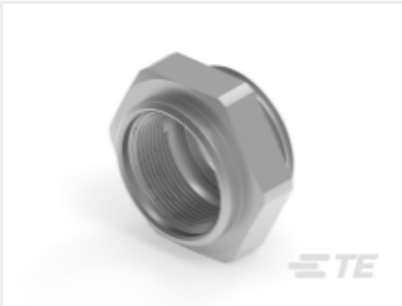

TE Part # 394828-E
M12 METAL SHELL, FEMALE, VERT, 9MM, C6A

TE Part # T4111512041-000
M12 M, 4P GOLD D_CODE S SHIELDED PG9

TE Part # 364175-E
M12 FEMALE, D CODE, 4P, 17MM SMT

TE Part # T4113512041-000
M12 M, 4P GOLD D_CODE RA SHIELDED PG9

TE Part # 454949-E
M12 FEMALE, D CODE, 4P, 17MM SMT

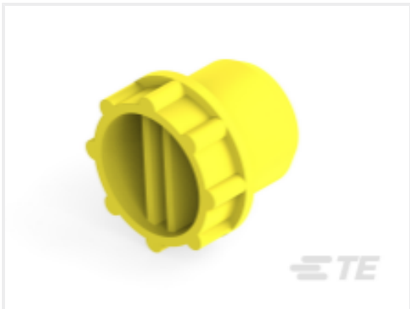

TE Part # 374343-E
CCA PC M12 * F * * * * * * * * J 3 22553

TE Part # TAD2413A201-001
M12D4-MS-TPE USH-0.5M

## Also in the Series | M12 Connector

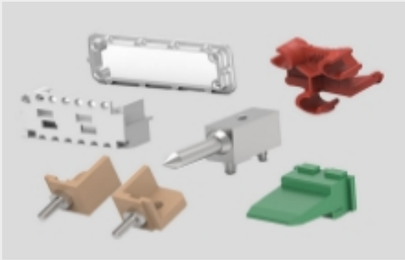

Connector Hardware(11)

Connector Seals & Cavity Plugs(4)

Standard Circular Connectors(633)

## Customers Also Bought

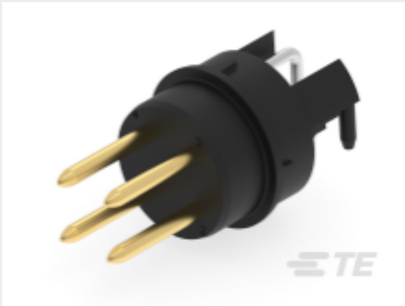

TE Part #225267-E
M12 MALE, UNI CODE,RA, 4P THR REAR MOUNT

TE Part #166642-000
D-SCE-1K-6.4-50-6

TE Part #G-MRCO-017
CO MS32 8L TDFN 2,5x2,5 SWITCH ANALOG

TE Part #225273-E
M12 FEMALE, A CODE,RA, 5P THR REAR MOUNT

TE Part #484118-E
M12 MALE, A CODE, 5P, 17MM THR

TE Part #0418834001
LSTT-1.6-0-SP

TE Part #770903-6
MINI UMNL PIN 22-18 AWG AU

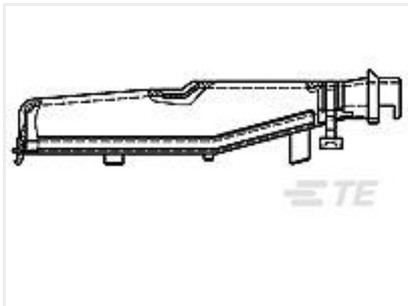

TE Part #929674-1
DECKEL F 55P GEH

TE Part #1977223-1
FSM2JSMLS=6MM TACT SWITCH, SMT 100gf

TE Part #969554-4
BU-GEH ASSY 5P

## Documents

### Product Drawings

M12 FEMALE, D CODE, 4P, 17MM SMT

English

### CAD Files

Customer View Model

ENG_CVM_CVM_474665-E_1.3d_stp.zip

English

Customer View Model

ENG_CVM_CVM_474665-E_1.2d_dxf.zip

English

Customer View Model

ENG_CVM_CVM_474665-E_1.3d_igs.zip

English

3D PDF

3D

By downloading the CAD file I accept and agree to the Terms and Conditions of use.

## Datasheets & Catalog Pages

ERNI M8M12 Circular Connectors

English

ERNI M8M12 Circular Connectors

German

## Product Specifications

Application Specification

English

## Agency Approvals

UL

English