Series 45

Innovative and comprehensive. Modular.

https://eao.com/45

45 Information about the Series

Key advantages

- Comprehensive and modular series
- Rugged in use (up to IP69K)
- Easy to assemble and use
- Modern design with many options

Typical application areas

Various operating and control functions in machinery and equipment, such as:
- Start and stop
- Reset
- On and off
- Function control

Functions

- Pushbutton
- Illuminated pushbutton
- Double pushbutton
- Mushroom-head pushbutton
- Palm Switch
- Selector switch
- Keylock switch
- ID keylock switch
- Toggle stick
- Toggle switch
- Indicator
- Buzzer
- Potentiometer
- Stop switch
- Emergency stop switch

Design

- Flush
- Raised

IP front protection

- IP40
- IP65
- IP66
- IP67
- IP69K

Raitings

- 500 VAC (10 A)

Mounting cut-outs

- Ø 22.3 mm
- Ø 30.5 mm

Terminal

- Screw terminal
- PCB
- Spring-loaded terminal

Lens Material

- Plastic

Markings

- Laser marking

Approvals

- CCC
- CSA
- UL

Conformities

- CE
- 2014/30/EU (EMC)
- 2014/35/EU (LVD)
- 2011/65/EU (RoHS)

Product structure	**454**
Flush design	
Pushbutton	455
Illuminated pushbutton	456
Selector switch 2 positions short lever	457
Selector switch 2 positions long lever	458
Selector switch 3 positions short lever	459
Selector switch 3 positions long lever	460
Keylock switch 2 and 3 positions	461
Indicator	462
Raised design	
Pushbutton	463
Illuminated pushbutton	467
Double pushbutton	470
Illuminated double pushbutton	472
Mushroom-head pushbutton Ø 30 mm	474
Mushroom-head pushbutton Ø 40 mm	476
Mushroom-head pushbutton Ø 60 mm	478
Mushroom-head pushbutton illuminated Ø 30 mm	480
Mushroom-head pushbutton illuminated Ø 40 mm	482
Mushroom-head pushbutton illuminated Ø 60 mm	484
Palm switch	486
Selector switch 2 positions short lever	487
Selector switch 2 positions long lever	489
Selector switch 2 positions round lever	491
Selector switch 3 positions short lever	492
Selector switch 3 positions long lever	494
Selector switch 4 positions round lever	496
Keylock switch 2 positions	497
Keylock switch 3 positions	498
ID keylock switch	500
Toggle stick	501
Toggle switch	503
Indicator full-face illumination	504
Indicator front illumination	505
Indicator Bi-colour	506
Buzzer	507
Potentiometer	508
Stop switch	510
Emergency stop switch foolproof, EN IEC 60947-5-5	511
Illuminated emergency stop switch, foolprof, EN IEC 60947-5-5	513
Components	**515**
Accessories	**529**
Drawings	**543**
Technical data	**551**
Marking	**563**
Application guidelines	**570**

45 Product structure

Functions
Indicator
Buzzer
Pushbutton
Double pushbutton
Illuminated pushbutton
Emergency stop switch
Stop switch
Palm switch
Mushroom-head pushbutton
Keylock switch
ID keylock switch
Selector switch
Potentiometer
Toggle stick
Toggle switch

Holder

Switching elements
1 Switching element 1 NC/1 NO
2 Switching elements 2 NC or 2 NO

Lamp element

Pushbutton, IP66, IP67, IP69K

Equipment consisting of (schematic overview)

Actuator

Holder Page 516

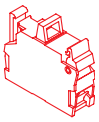

Switching element Page 518

Each Part Number listed below includes all the black components shown in the 3D-drawing.

To obtain a complete unit, please select the red components from the pages shown.

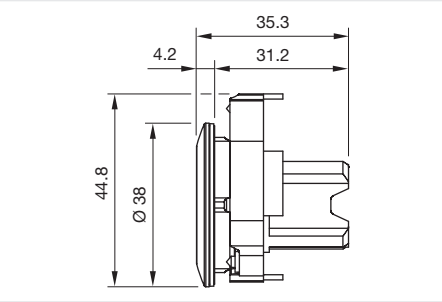

Dimensions [mm]

Product can differ from the current configuration.

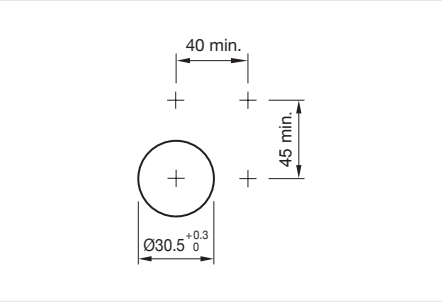

Mounting cut-outs [mm]

General information

- Front panel thickness 1 … 6 mm

Actuator, Front dimension Ø 38 mm

Switching action	Lens colour	Lens shape	Front bezel colour	Front bezel material	Housing colour	Housing material	Part No.	Wiring diagram
Momentary	Black	flush	Sand grey	Metal	Silver	Metal	45-2131.4F10.000	72
	Red	flush	Sand grey	Metal	Silver	Metal	45-2131.4F20.000	72
	Yellow	flush	Sand grey	Metal	Silver	Metal	45-2131.4F40.000	72
	Green	flush	Sand grey	Metal	Silver	Metal	45-2131.4F50.000	72
	Blue	flush	Sand grey	Metal	Silver	Metal	45-2131.4F60.000	72
	White	flush	Sand grey	Metal	Silver	Metal	45-2131.4F90.000	72
Maintained	Black	flush	Sand grey	Metal	Silver	Metal	45-2134.4F10.000	73
	Red	flush	Sand grey	Metal	Silver	Metal	45-2134.4F20.000	73
	Yellow	flush	Sand grey	Metal	Silver	Metal	45-2134.4F40.000	73
	Green	flush	Sand grey	Metal	Silver	Metal	45-2134.4F50.000	73
	Blue	flush	Sand grey	Metal	Silver	Metal	45-2134.4F60.000	73
	White	flush	Sand grey	Metal	Silver	Metal	45-2134.4F90.000	73

Wiring diagrams

Wiring diagram 72

Wiring diagram 73

01
02
03
04
09
14
17
18
19
22
31
41
45
51
56
57
61
70
71
82
84
92
96

Illuminated pushbutton, IP66, IP67, IP69K

Product can differ from the current configuration.

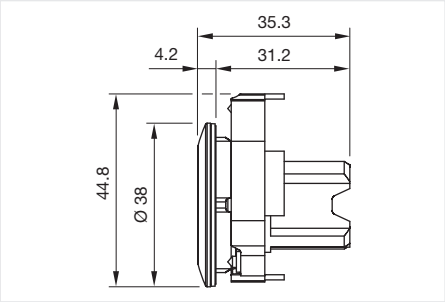

Dimensions [mm]

General information

- Front panel thickness 1 … 6 mm

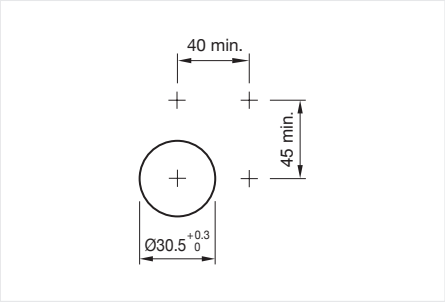

Mounting cut-outs [mm]

Equipment consisting of (schematic overview)

Actuator

Holder Page 516

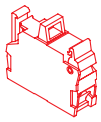

Switching element Page 518

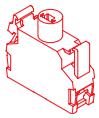

Illumination element Page 523

Each Part Number listed below includes all the black components shown in the 3D-drawing.

To obtain a complete unit, please select the red components from the pages shown.

Actuator, Front dimension Ø 38 mm

Switching action	Lens colour	Lens shape	Front bezel colour	Front bezel material	Housing colour	Housing material	Part No.	Wiring diagram
Momentary	Red	flush	Sand grey	Metal	Silver	Metal	45-2231.4FE0.000	191
	Yellow	flush	Sand grey	Metal	Silver	Metal	45-2231.4FG0.000	191
	Green	flush	Sand grey	Metal	Silver	Metal	45-2231.4FH0.000	191
	Blue	flush	Sand grey	Metal	Silver	Metal	45-2231.4FJ0.000	191
	Colourless	flush	Sand grey	Metal	Silver	Metal	45-2231.4FK0.000	191
Maintained	Red	flush	Sand grey	Metal	Silver	Metal	45-2234.4FE0.000	192
	Yellow	flush	Sand grey	Metal	Silver	Metal	45-2234.4FG0.000	192
	Green	flush	Sand grey	Metal	Silver	Metal	45-2234.4FH0.000	192
	Blue	flush	Sand grey	Metal	Silver	Metal	45-2234.4FJ0.000	192
	Colourless	flush	Sand grey	Metal	Silver	Metal	45-2234.4FK0.000	192

Wiring diagrams

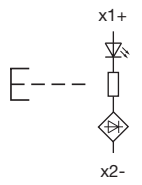

Wiring diagram 191

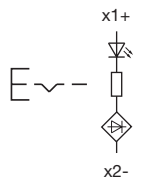

Wiring diagram 192

Selector switch 2 positions short lever, IP66, IP67, IP69K

Equipment consisting of (schematic overview)

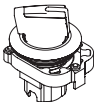

Actuator

Holder Page 516

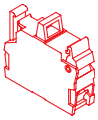

Switching element Page 518

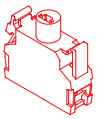

Illumination element Page 523

Each Part Number listed below includes all the black components shown in the 3D-drawing.

To obtain a complete unit, please select the red components from the pages shown.

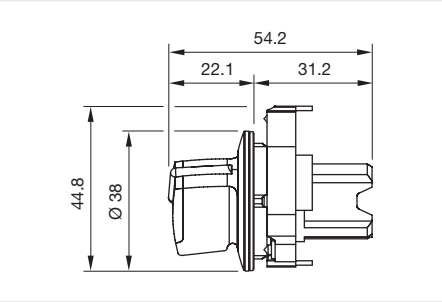

Dimensions [mm]

Product can differ from the current configuration.

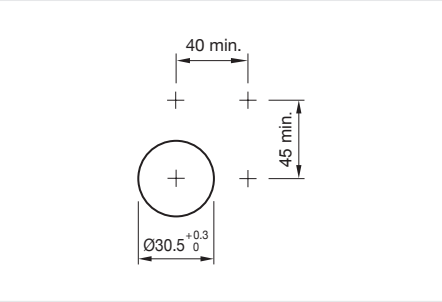

Mounting cut-outs [mm]

General information

- Front panel thickness 1 … 6 mm
- It is advisable to choose a white illumination

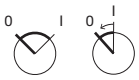

Actuator, Front dimension Ø 38 mm

Switching action	Switching angle	Lever colour	Front bezel colour	Front bezel material	Housing material	Part No.	Wiring diagram
Rest - Maintained	90° right	Red	Sand grey	Metal	Metal	45-2828.4C20.001	194
	90° right	Green	Sand grey	Metal	Metal	45-2828.4C50.001	194
	90° right	White	Sand grey	Metal	Metal	45-2828.4C90.001	194
Rest - Momentary	45° right	Red	Sand grey	Metal	Metal	45-2844.4C20.006	193
	45° right	Green	Sand grey	Metal	Metal	45-2844.4C50.006	193
	45° right	White	Sand grey	Metal	Metal	45-2844.4C90.006	193

Wiring diagrams

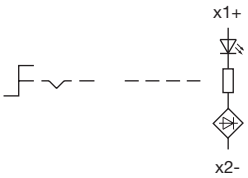

Wiring diagram 193

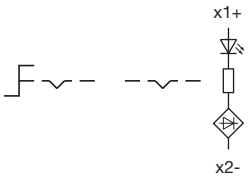

Wiring diagram 194

01
02
03
04
09
14
17
18
19
22
31
41
45
51
56
57
61
70
71
82
84
92
96

Selector switch 2 positions long lever, IP66, IP67, IP69K

Product can differ from the current configuration.

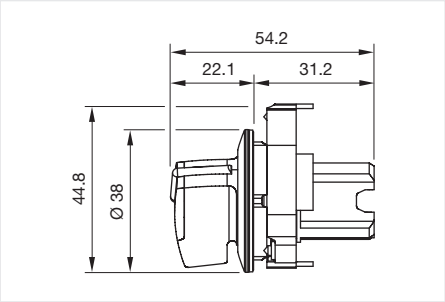

Dimensions [mm]

General information

- Front panel thickness 1 … 6 mm
- It is advisable to choose a white illumination

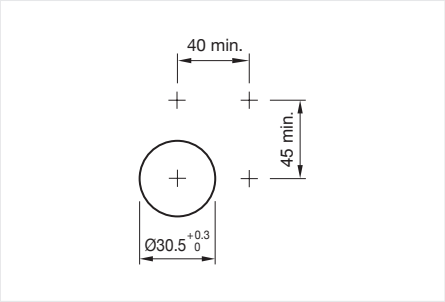

Mounting cut-outs [mm]

Equipment consisting of (schematic overview)

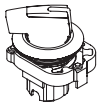

Actuator

Holder Page 516

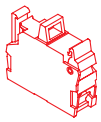

Switching element Page 518

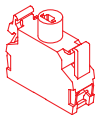

Illumination element Page 523

Each Part Number listed below includes all the black components shown in the 3D-drawing.

To obtain a complete unit, please select the red components from the pages shown.

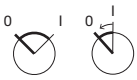

Actuator, Front dimension Ø 38 mm

Switching action	Switching angle	Lever colour	Front bezel colour	Front bezel material	Housing material	Part No.	Wiring diagram
Rest - Maintained	90° right	Red	Sand grey	Metal	Metal	45-2828.4D20.001	194
	90° right	Green	Sand grey	Metal	Metal	45-2828.4D50.001	194
	90° right	White	Sand grey	Metal	Metal	45-2828.4D90.001	194
Rest - Momentary	45° right	Red	Sand grey	Metal	Metal	45-2844.4D20.006	193
	45° right	Green	Sand grey	Metal	Metal	45-2844.4D50.006	193
	45° right	White	Sand grey	Metal	Metal	45-2844.4D90.006	193

Wiring diagrams

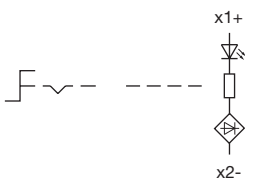

Wiring diagram 193

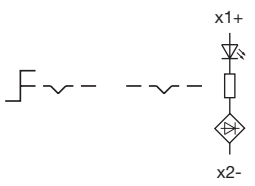

Wiring diagram 194

Selector switch 3 positions short lever, IP66, IP67, IP69K

Equipment consisting of (schematic overview)

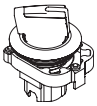

Actuator

Holder Page 516

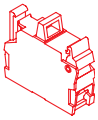

Switching element Page 518

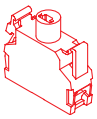

Illumination element Page 523

Each Part Number listed below includes all the black components shown in the 3D-drawing.

To obtain a complete unit, please select the red components from the pages shown.

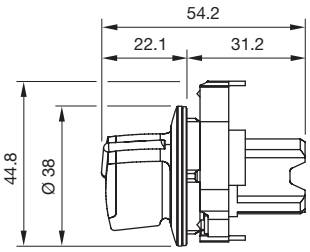

Dimensions [mm]

Product can differ from the current configuration.

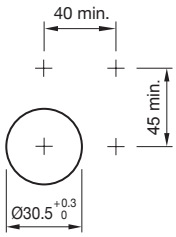

Mounting cut-outs [mm]

General information

- Front panel thickness 1 … 6 mm
- It is advisable to choose a white illumination

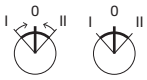

Actuator, Front dimension Ø 38 mm

Switching action	Switching angle	Lever colour	Front bezel colour	Front bezel material	Housing material	Part No.	Wiring diagram
Momentary - Rest - Momentary	45° left / 45° right	Red	Sand grey	Metal	Metal	45-280S.4C20.003	196
	45° left / 45° right	Green	Sand grey	Metal	Metal	45-280S.4C50.003	196
	45° left / 45° right	White	Sand grey	Metal	Metal	45-280S.4C90.003	196
Maintained - Rest - Maintained	45° left / 45° right	Red	Sand grey	Metal	Metal	45-2819.4C20.003	195
	45° left / 45° right	Green	Sand grey	Metal	Metal	45-2819.4C50.003	195
	45° left / 45° right	White	Sand grey	Metal	Metal	45-2819.4C90.003	195

Wiring diagrams

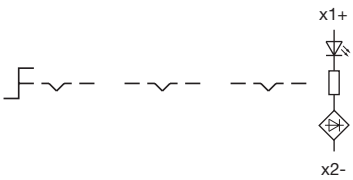

Wiring diagram 195

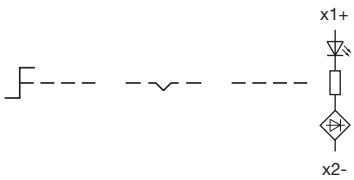

Wiring diagram 196

01
02
03
04
09
14
17
18
19
22
31
41
45
51
56
57
61
70
71
82
84
92
96

Selector switch 3 positions long lever, IP66, IP67, IP69K

Product can differ from the current configuration.

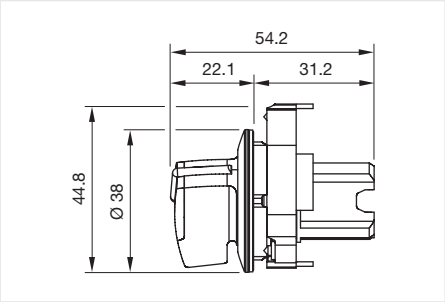

Dimensions [mm]

General information

- Front panel thickness 1 … 6 mm
- It is advisable to choose a white illumination

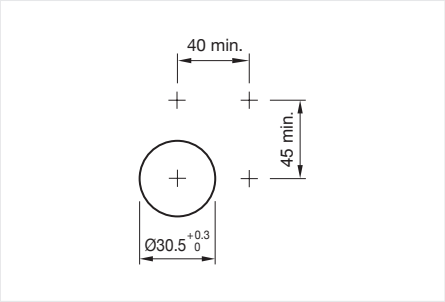

Mounting cut-outs [mm]

Equipment consisting of (schematic overview)

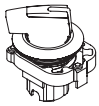

Actuator

Holder Page 516

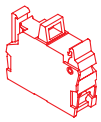

Switching element Page 518

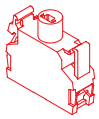

Illumination element Page 523

Each Part Number listed below includes all the black components shown in the 3D-drawing.

To obtain a complete unit, please select the red components from the pages shown.

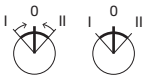

Actuator, Front dimension Ø 38 mm

Switching action	Switching angle	Lever colour	Front bezel colour	Front bezel material	Housing material	Part No.	Wiring diagram
Momentary - Rest - Momentary	45° left / 45° right	Red	Sand grey	Metal	Metal	45-280S.4D20.003	196
	45° left / 45° right	Green	Sand grey	Metal	Metal	45-280S.4D50.003	196
	45° left / 45° right	White	Sand grey	Metal	Metal	45-280S.4D90.003	196
Maintained - Rest - Maintained	45° left / 45° right	Red	Sand grey	Metal	Metal	45-2819.4D20.003	195
	45° left / 45° right	Green	Sand grey	Metal	Metal	45-2819.4D50.003	195
	45° left / 45° right	White	Sand grey	Metal	Metal	45-2819.4D90.003	195

Wiring diagrams

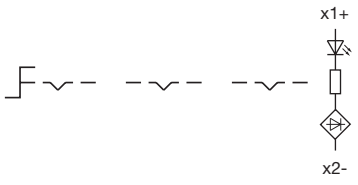

Wiring diagram 195

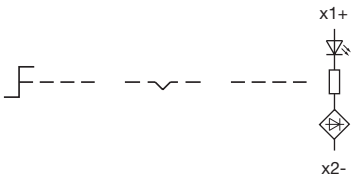

Wiring diagram 196

Keylock switch 2 and 3 positions, IP66, IP67, IP69K

Equipment consisting of (schematic overview)

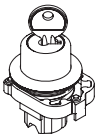

Actuator

Holder Page 516

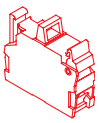

Switching element Page 518

Each Part Number listed below includes all the black components shown in the 3D-drawing.

To obtain a complete unit, please select the red components from the pages shown.

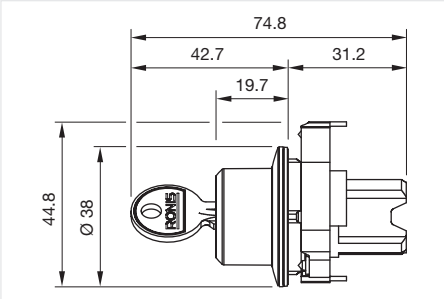

Dimensions [mm]

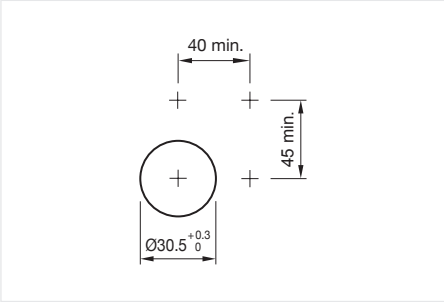

Mounting cut-outs [mm]

Product can differ from the current configuration.

General information

- Front panel thickness 1 … 6 mm
- The standard lock: RONIS, T254

Actuator, Front dimension Ø 38 mm

Switching action	Switching angle	Front bezel colour	Front bezel material	Housing material	Part No.	Wiring diagram
Maintained (a) - Rest (a) - Maintained (a)	45° left / 45° right	Sand grey	Metal	Metal	45-290F.4F00.113	83
Rest (a) - Maintained (a)	90° right	Sand grey	Metal	Metal	45-290H.4F00.111	79
Rest - Maintained (a)	90° right	Sand grey	Metal	Metal	45-290J.4F00.111	79
Rest (a) - Momentary	45° right	Sand grey	Metal	Metal	45-290J.4F00.116	78

a = Key remove

Wiring diagrams

Wiring diagram 78

Wiring diagram 79

Wiring diagram 83

Indicator, IP66, IP67, IP69K

Product can differ from the current configuration.

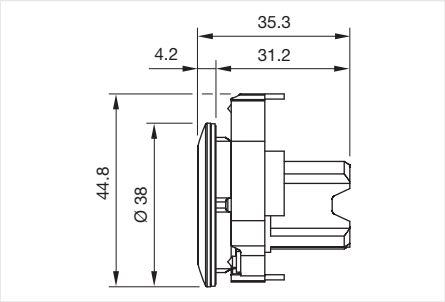

Dimensions [mm]

General information

- Front panel thickness 1 … 6 mm

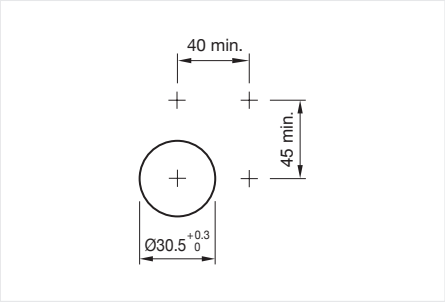

Mounting cut-outs [mm]

Equipment consisting of (schematic overview)

Actuator

Holder Page 516

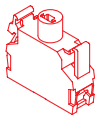

Illumination element Page 74

Each Part Number listed below includes all the black components shown in the 3D-drawing.

To obtain a complete unit, please select the red components from the pages shown.

Actuator, Front dimension Ø 38 mm

Front bezel colour	Front bezel material	Lens cap colour	Housing material	Part No.	Wiring diagram
Sand grey	Metal	Red	Metal	45-2T07.4FE0.000	190
	Metal	Yellow	Metal	45-2T07.4FG0.000	190
	Metal	Green	Metal	45-2T07.4FH0.000	190
	Metal	Blue	Metal	45-2T07.4FJ0.000	190
	Metal	Colourless	Metal	45-2T07.4FK0.000	190

Wiring diagrams

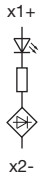

Wiring diagram 190

Pushbutton, IP66, IP67, IP69K

Equipment consisting of (schematic overview)

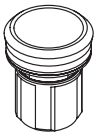

Actuator

Holder Page 516

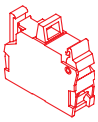

Switching element Page 518

Each Part Number listed below includes all the black components shown in the 3D-drawing.

To obtain a complete unit, please select the red components from the pages shown.

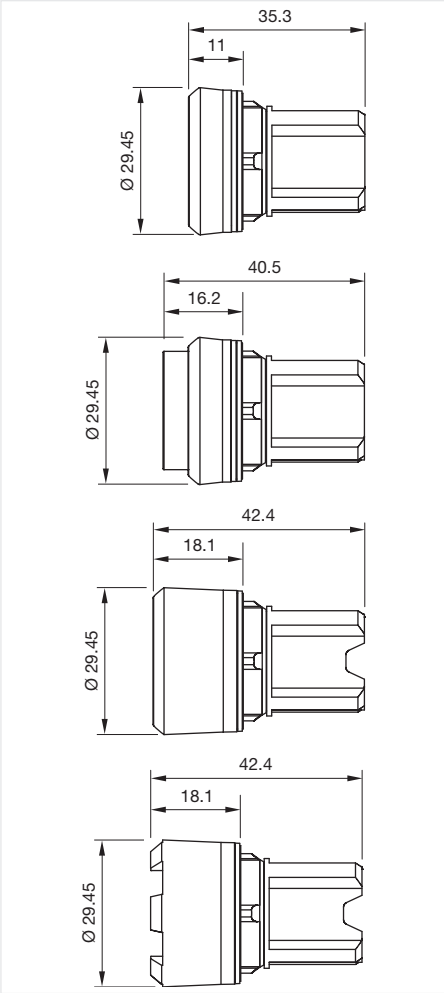

Dimensions [mm]

Product can differ from the current configuration.

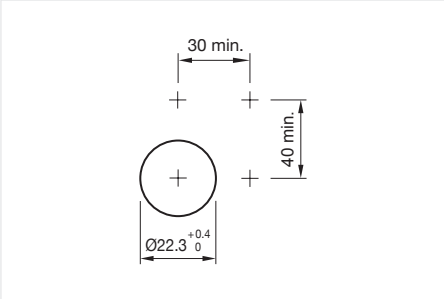

Mounting cut-outs [mm]

General information

- Mounting depth, incl. front plate, see chapter drawings

Actuator, Front dimension Ø 29,5 mm

Switching action	Lens colour	Lens shape	Lens type	Front bezel colour	Front bezel material	Housing colour	Housing material	Part No.	Wiring diagram
Momentary	Black	flush	level with front bezel	Black	Plastic	Black	Plastic	45-2131.1110.000	72
	Red	flush	level with front bezel	Black	Plastic	Black	Plastic	45-2131.1120.000	72
	Yellow	flush	level with front bezel	Black	Plastic	Black	Plastic	45-2131.1140.000	72
	Green	flush	level with front bezel	Black	Plastic	Black	Plastic	45-2131.1150.000	72

45 Raised design

Switching action	Lens colour	Lens shape	Lens type	Front bezel colour	Front bezel material	Housing colour	Housing material	Part No.	Wiring diagram
Momentary	Blue	flush	level with front bezel	Black	Plastic	Black	Plastic	45-2131.1160.000	72
	Grey	flush	level with front bezel	Black	Plastic	Black	Plastic	45-2131.1180.000	72
	White	flush	level with front bezel	Black	Plastic	Black	Plastic	45-2131.1190.000	72
	Colour-less	flush	level with front bezel	Black	Plastic	Black	Plastic	45-2131.11K0.000	72
	Black	flush	raised above front bezel	Black	Plastic	Black	Plastic	45-2131.1210.000	72
	Red	flush	raised above front bezel	Black	Plastic	Black	Plastic	45-2131.1220.000	72
	Yellow	flush	raised above front bezel	Black	Plastic	Black	Plastic	45-2131.1240.000	72
	Green	flush	raised above front bezel	Black	Plastic	Black	Plastic	45-2131.1250.000	72
	Blue	flush	raised above front bezel	Black	Plastic	Black	Plastic	45-2131.1260.000	72
	White	flush	raised above front bezel	Black	Plastic	Black	Plastic	45-2131.1290.000	72
	Black	flush	level with front bezel	Silver	Metal	Silver	Metal	45-2131.2110.000	72
	Red	flush	level with front bezel	Silver	Metal	Silver	Metal	45-2131.2120.000	72
	Yellow	flush	level with front bezel	Silver	Metal	Silver	Metal	45-2131.2140.000	72
	Green	flush	level with front bezel	Silver	Metal	Silver	Metal	45-2131.2150.000	72
	Blue	flush	level with front bezel	Silver	Metal	Silver	Metal	45-2131.2160.000	72
	Grey	flush	level with front bezel	Silver	Metal	Silver	Metal	45-2131.2180.000	72
	White	flush	level with front bezel	Silver	Metal	Silver	Metal	45-2131.2190.000	72
	Colour-less	flush	level with front bezel	Silver	Metal	Silver	Metal	45-2131.21K0.000	72
	Black	flush	raised above front bezel	Silver	Metal	Silver	Metal	45-2131.2210.000	72
	Red	flush	raised above front bezel	Silver	Metal	Silver	Metal	45-2131.2220.000	72
	Yellow	flush	raised above front bezel	Silver	Metal	Silver	Metal	45-2131.2240.000	72
	Green	flush	raised above front bezel	Silver	Metal	Silver	Metal	45-2131.2250.000	72
	Blue	flush	raised above front bezel	Silver	Metal	Silver	Metal	45-2131.2260.000	72
	White	flush	raised above front bezel	Silver	Metal	Silver	Metal	45-2131.2290.000	72
	Black	flush	level with front bezel	Sand grey	Metal	Black	Plastic	45-2131.3110.000	72
	Red	flush	level with front bezel	Sand grey	Metal	Black	Plastic	45-2131.3120.000	72
	Yellow	flush	level with front bezel	Sand grey	Metal	Black	Plastic	45-2131.3140.000	72
	Green	flush	level with front bezel	Sand grey	Metal	Black	Plastic	45-2131.3150.000	72
	Blue	flush	level with front bezel	Sand grey	Metal	Black	Plastic	45-2131.3160.000	72
	Grey	flush	level with front bezel	Sand grey	Metal	Black	Plastic	45-2131.3180.000	72
	White	flush	level with front bezel	Sand grey	Metal	Black	Plastic	45-2131.3190.000	72
	Colour-less	flush	level with front bezel	Sand grey	Metal	Black	Plastic	45-2131.31K0.000	72
	Black	flush	raised above front bezel	Sand grey	Metal	Black	Plastic	45-2131.3210.000	72
	Red	flush	raised above front bezel	Sand grey	Metal	Black	Plastic	45-2131.3220.000	72
	Yellow	flush	raised above front bezel	Sand grey	Metal	Black	Plastic	45-2131.3240.000	72

Switching action	Lens colour	Lens shape	Lens type	Front bezel colour	Front bezel material	Housing colour	Housing material	Part No.	Wiring diagram
Momentary	Green	flush	raised above front bezel	Sand grey	Metal	Black	Plastic	45-2131.3250.000	72
	Blue	flush	raised above front bezel	Sand grey	Metal	Black	Plastic	45-2131.3260.000	72
	White	flush	raised above front bezel	Sand grey	Metal	Black	Plastic	45-2131.3290.000	72
Maintained	Black	flush	level with front bezel	Black	Plastic	Black	Plastic	45-2134.1110.000	73
	Red	flush	level with front bezel	Black	Plastic	Black	Plastic	45-2134.1120.000	73
	Yellow	flush	level with front bezel	Black	Plastic	Black	Plastic	45-2134.1140.000	73
	Green	flush	level with front bezel	Black	Plastic	Black	Plastic	45-2134.1150.000	73
	Blue	flush	level with front bezel	Black	Plastic	Black	Plastic	45-2134.1160.000	73
	White	flush	level with front bezel	Black	Plastic	Black	Plastic	45-2134.1190.000	73
	Black	flush	level with front bezel	Silver	Metal	Silver	Metal	45-2134.2110.000	73
	Red	flush	level with front bezel	Silver	Metal	Silver	Metal	45-2134.2120.000	73
	Yellow	flush	level with front bezel	Silver	Metal	Silver	Metal	45-2134.2140.000	73
	Green	flush	level with front bezel	Silver	Metal	Silver	Metal	45-2134.2150.000	73
	Blue	flush	level with front bezel	Silver	Metal	Silver	Metal	45-2134.2160.000	73
	White	flush	level with front bezel	Silver	Metal	Silver	Metal	45-2134.2190.000	73
	Red	flush	raised above front bezel	Silver	Metal	Silver	Metal	45-2134.2220.000	73
	Black	flush	level with front bezel	Sand grey	Metal	Black	Plastic	45-2134.3110.000	73
	Red	flush	level with front bezel	Sand grey	Metal	Black	Plastic	45-2134.3120.000	73
	Yellow	flush	level with front bezel	Sand grey	Metal	Black	Plastic	45-2134.3140.000	73
	Green	flush	level with front bezel	Sand grey	Metal	Black	Plastic	45-2134.3150.000	73
	Blue	flush	level with front bezel	Sand grey	Metal	Black	Plastic	45-2134.3160.000	73
	White	flush	level with front bezel	Sand grey	Metal	Black	Plastic	45-2134.3190.000	73
Momentary	Black	flush	lower than front bezel	Black	Plastic	Black	Plastic	45-2131.1310.000	72
	Red	flush	lower than front bezel	Black	Plastic	Black	Plastic	45-2131.1320.000	72
	Yellow	flush	lower than front bezel	Black	Plastic	Black	Plastic	45-2131.1340.000	72
	Green	flush	lower than front bezel	Black	Plastic	Black	Plastic	45-2131.1350.000	72
	Blue	flush	lower than front bezel	Black	Plastic	Black	Plastic	45-2131.1360.000	72
	White	flush	lower than front bezel	Black	Plastic	Black	Plastic	45-2131.1390.000	72
	Black	flush	lower than front bezel	Silver	Metal	Silver	Metal	45-2131.2310.000	72
	Red	flush	lower than front bezel	Silver	Metal	Silver	Metal	45-2131.2320.000	72
	Yellow	flush	lower than front bezel	Silver	Metal	Silver	Metal	45-2131.2340.000	72
	Green	flush	lower than front bezel	Silver	Metal	Silver	Metal	45-2131.2350.000	72
	Blue	flush	lower than front bezel	Silver	Metal	Silver	Metal	45-2131.2360.000	72
	White	flush	lower than front bezel	Silver	Metal	Silver	Metal	45-2131.2390.000	72
	Black	flush	lower than front bezel	Sand grey	Metal	Black	Plastic	45-2131.3310.000	72
	Red	flush	lower than front bezel	Sand grey	Metal	Black	Plastic	45-2131.3320.000	72
	Yellow	flush	lower than front bezel	Sand grey	Metal	Black	Plastic	45-2131.3340.000	72
	Green	flush	lower than front bezel	Sand grey	Metal	Black	Plastic	45-2131.3350.000	72
	Blue	flush	lower than front bezel	Sand grey	Metal	Black	Plastic	45-2131.3360.000	72
	White	flush	lower than front bezel	Sand grey	Metal	Black	Plastic	45-2131.3390.000	72

45 Raised design

Switching action	Lens colour	Lens shape	Lens type	Front bezel colour	Front bezel material	Housing colour	Housing material	Part No.	Wiring diagram
Momentary	Black	flush	lower than front bezel	Black	Plastic	Black	Plastic	45-2131.1410.000	72
	Red	flush	lower than front bezel	Black	Plastic	Black	Plastic	45-2131.1420.000	72
	Yellow	flush	lower than front bezel	Black	Plastic	Black	Plastic	45-2131.1440.000	72
	Green	flush	lower than front bezel	Black	Plastic	Black	Plastic	45-2131.1450.000	72
	Blue	flush	lower than front bezel	Black	Plastic	Black	Plastic	45-2131.1460.000	72
	White	flush	lower than front bezel	Black	Plastic	Black	Plastic	45-2131.1490.000	72

Wiring diagrams

Wiring diagram 72

Wiring diagram 73

Robust. Aesthetic and versatile.
EAO Series 45 illuminated pushbuttons.

Ideal for use in harsh environments – thanks to robust construction with IP69K protection and aesthetic flush design.

- Robust metal or plastic construction (IP69K)
- Fast and simple assembly without special tools
- Aesthetic design with uniform LED illumination
- Long mechanical service life
- Modular system with customer-specific options

www.eao.com/45

eao

Your Expert Partner for **Human Machine Interfaces**

Illuminated pushbutton, IP66, IP67, IP69K

Equipment consisting of (schematic overview)

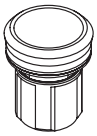

Actuator

Holder Page 516

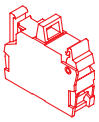

Switching element Page 518

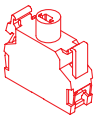

Illumination element Page 523

Each Part Number listed below includes all the black components shown in the 3D-drawing.

To obtain a complete unit, please select the red components from the pages shown.

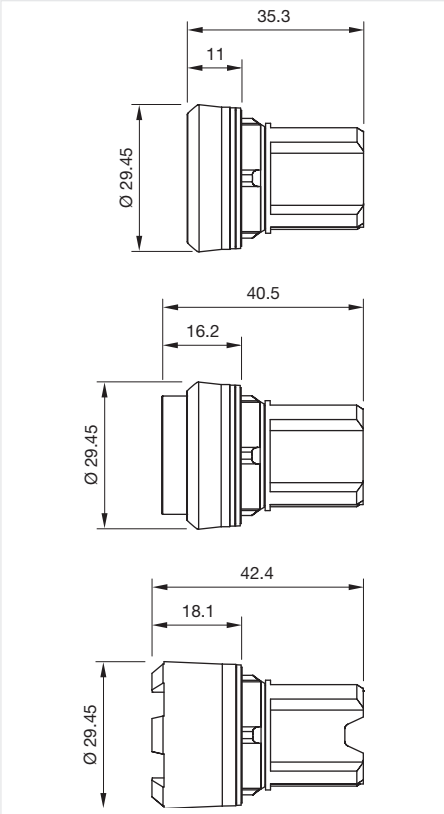

Dimensions [mm]

Product can differ from the current configuration.

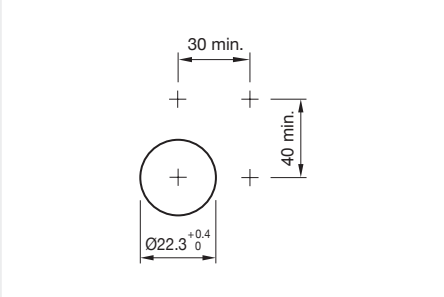

Mounting cut-outs [mm]

General information

- Mounting depth, incl. front plate, see chapter drawings

Actuator, Front dimension Ø 29,5 mm

Switching action	Lens colour	Lens shape	Lens type	Front bezel colour	Front bezel material	Housing colour	Housing material	Part No.	Wiring diagram
Momentary	Red	flush	level with front bezel	Black	Plastic	Black	Plastic	45-2231.11E0.000	191
	Amber	flush	level with front bezel	Black	Plastic	Black	Plastic	45-2231.11F0.000	191
	Yellow	flush	level with front bezel	Black	Plastic	Black	Plastic	45-2231.11G0.000	191
	Green	flush	level with front bezel	Black	Plastic	Black	Plastic	45-2231.11H0.000	191
	Blue	flush	level with front bezel	Black	Plastic	Black	Plastic	45-2231.11J0.000	191
	Colour-less	flush	level with front bezel	Black	Plastic	Black	Plastic	45-2231.11K0.000	191
	White	flush	level with front bezel	Black	Plastic	Black	Plastic	45-2231.11N0.000	191

45 Raised design

Switching action	Lens colour	Lens shape	Lens type	Front bezel colour	Front bezel material	Housing colour	Housing material	Part No.	Wiring diagram
Momentary	Red	flush	raised above front bezel	Black	Plastic	Black	Plastic	45-2231.12E0.000	191
	Yellow	flush	raised above front bezel	Black	Plastic	Black	Plastic	45-2231.12G0.000	191
	Green	flush	raised above front bezel	Black	Plastic	Black	Plastic	45-2231.12H0.000	191
	Blue	flush	raised above front bezel	Black	Plastic	Black	Plastic	45-2231.12J0.000	191
	Colour-less	flush	raised above front bezel	Black	Plastic	Black	Plastic	45-2231.12K0.000	191
	Blue	flush	lower than front bezel	Black	Plastic	Black	Plastic	45-2231.14J0.000	191
	Red	flush	level with front bezel	Silver	Metal	Silver	Metal	45-2231.21E0.000	191
	Amber	flush	level with front bezel	Silver	Metal	Silver	Metal	45-2231.21F0.000	191
	Yellow	flush	level with front bezel	Silver	Metal	Silver	Metal	45-2231.21G0.000	191
	Green	flush	level with front bezel	Silver	Metal	Silver	Metal	45-2231.21H0.000	191
	Blue	flush	level with front bezel	Silver	Metal	Silver	Metal	45-2231.21J0.000	191
	Colour-less	flush	level with front bezel	Silver	Metal	Silver	Metal	45-2231.21K0.000	191
	White	flush	level with front bezel	Silver	Metal	Silver	Metal	45-2231.21N0.000	191
	Red	flush	raised above front bezel	Silver	Metal	Silver	Metal	45-2231.22E0.000	191
	Amber	flush	raised above front bezel	Silver	Metal	Silver	Metal	45-2231.22F0.000	191
	Yellow	flush	raised above front bezel	Silver	Metal	Silver	Metal	45-2231.22G0.000	191
	Green	flush	raised above front bezel	Silver	Metal	Silver	Metal	45-2231.22H0.000	191
	Blue	flush	raised above front bezel	Silver	Metal	Silver	Metal	45-2231.22J0.000	191
	Colour-less	flush	raised above front bezel	Silver	Metal	Silver	Metal	45-2231.22K0.000	191
	White	flush	raised above front bezel	Silver	Metal	Silver	Metal	45-2231.22N0.000	191
	Red	flush	level with front bezel	Sand grey	Metal	Black	Plastic	45-2231.31E0.000	191
	Amber	flush	level with front bezel	Sand grey	Metal	Black	Plastic	45-2231.31F0.000	191
	Yellow	flush	level with front bezel	Sand grey	Metal	Black	Plastic	45-2231.31G0.000	191
	Green	flush	level with front bezel	Sand grey	Metal	Black	Plastic	45-2231.31H0.000	191
	Blue	flush	level with front bezel	Sand grey	Metal	Black	Plastic	45-2231.31J0.000	191
	Colour-less	flush	level with front bezel	Sand grey	Metal	Black	Plastic	45-2231.31K0.000	191
	White	flush	level with front bezel	Sand grey	Metal	Black	Plastic	45-2231.31N0.000	191
	Red	flush	raised above front bezel	Sand grey	Metal	Black	Plastic	45-2231.32E0.000	191
	Yellow	flush	raised above front bezel	Sand grey	Metal	Black	Plastic	45-2231.32G0.000	191
	Green	flush	raised above front bezel	Sand grey	Metal	Black	Plastic	45-2231.32H0.000	191
	Blue	flush	raised above front bezel	Sand grey	Metal	Black	Plastic	45-2231.32J0.000	191
	Colour-less	flush	raised above front bezel	Sand grey	Metal	Black	Plastic	45-2231.32K0.000	191
Maintained	Red	flush	level with front bezel	Black	Plastic	Black	Plastic	45-2234.11E0.000	192
	Yellow	flush	level with front bezel	Black	Plastic	Black	Plastic	45-2234.11G0.000	192
	Green	flush	level with front bezel	Black	Plastic	Black	Plastic	45-2234.11H0.000	192

Switching action	Lens colour	Lens shape	Lens type	Front bezel colour	Front bezel material	Housing colour	Housing material	Part No.	Wiring diagram
Maintained	Blue	flush	level with front bezel	Black	Plastic	Black	Plastic	45-2234.11J0.000	192
	Colour-less	flush	level with front bezel	Black	Plastic	Black	Plastic	45-2234.11K0.000	192
	White	flush	level with front bezel	Black	Plastic	Black	Plastic	45-2234.11N0.000	192
	Red	flush	level with front bezel	Silver	Metal	Silver	Metal	45-2234.21E0.000	192
	Yellow	flush	level with front bezel	Silver	Metal	Silver	Metal	45-2234.21G0.000	192
	Green	flush	level with front bezel	Silver	Metal	Silver	Metal	45-2234.21H0.000	192
	Blue	flush	level with front bezel	Silver	Metal	Silver	Metal	45-2234.21J0.000	192
	Colour-less	flush	level with front bezel	Silver	Metal	Silver	Metal	45-2234.21K0.000	192
	White	flush	level with front bezel	Silver	Metal	Silver	Metal	45-2234.21N0.000	192
	Red	flush	level with front bezel	Sand grey	Metal	Black	Plastic	45-2234.31E0.000	192
	Yellow	flush	level with front bezel	Sand grey	Metal	Black	Plastic	45-2234.31G0.000	192
	Green	flush	level with front bezel	Sand grey	Metal	Black	Plastic	45-2234.31H0.000	192
	Blue	flush	level with front bezel	Sand grey	Metal	Black	Plastic	45-2234.31J0.000	192
	Colour-less	flush	level with front bezel	Sand grey	Metal	Black	Plastic	45-2234.31K0.000	192
	White	flush	level with front bezel	Sand grey	Metal	Black	Plastic	45-2234.31N0.000	192

Wiring diagrams

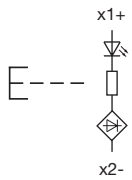

Wiring diagram 191

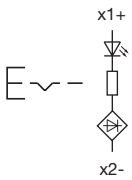

Wiring diagram 192

01
02
03
04
09
14
17
18
19
22
31
41
45
51
56
57
61
70
71
82
84
92
96

Double pushbutton, IP66, IP67, IP69K

Product can differ from the current configuration.

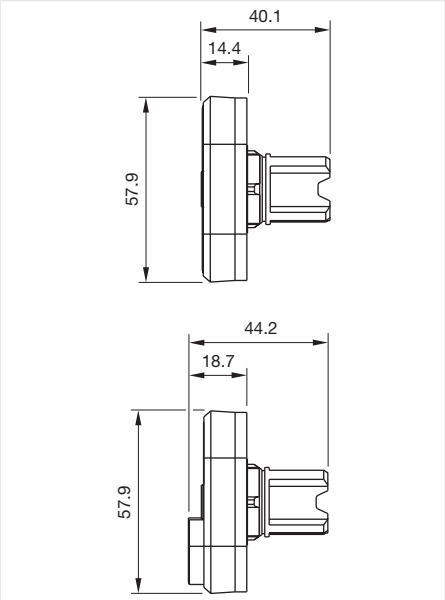

Dimensions [mm]

Equipment consisting of (schematic overview)

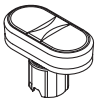

Actuator

Holder Page 516

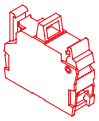

Switching element Page 518

Each Part Number listed below includes all the black components shown in the 3D-drawing.

To obtain a complete unit, please select the red components from the pages shown.

General information

- Mounting depth, incl. front plate, see chapter drawings

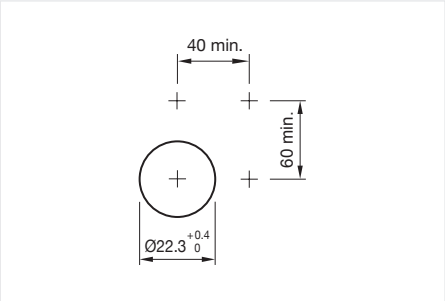

Mounting cut-outs [mm]

Actuator, Front dimension 58 mm x 30 mm

Switching action	Lens colour	Lens shape	Front bezel colour	Front bezel material	Housing colour	Housing material	Part No.	Wiring diagram	Component Layout
Momentary	Green/ Red	flush	Black	Plastic	Black	Plastic	45-2J31.15T0.000	200	25
	White / Black	flush	Black	Plastic	Black	Plastic	45-2J31.15V0.000	200	25
	Green/ Red	flush	Black	Plastic	Black	Plastic	45-2J31.16T0.000	200	25
	White / Black	flush	Black	Plastic	Black	Plastic	45-2J31.16V0.000	200	25
	Green/ Red	flush	Silver	Metal	Silver	Metal	45-2J31.25T0.000	200	25
	White / Black	flush	Silver	Metal	Silver	Metal	45-2J31.25V0.000	200	25
	Green/ Red	flush	Silver	Metal	Silver	Metal	45-2J31.26T0.000	200	25
	White / Black	flush	Silver	Metal	Silver	Metal	45-2J31.26V0.000	200	25
	Green/ Red	flush	Sand grey	Metal	Black	Plastic	45-2J31.35T0.000	200	25
	Green/ Red	flush	Sand grey	Metal	Black	Plastic	45-2J31.36T0.000	200	25
	White / Black	flush	Sand grey	Metal	Black	Plastic	45-2J31.36V0.000	200	25

Wiring diagrams

Wiring diagram 200

Component layouts

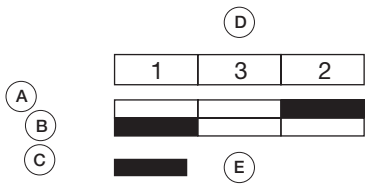

Component layout 25

A = Switching action
B = green (white) button pressed
C = red (black) button pressed
D = Arrangement switching element correspondens to designation of front adaptor
E = Switching element actuated

Illuminated double pushbutton, IP66, IP67, IP69K

Product can differ from the current configuration.

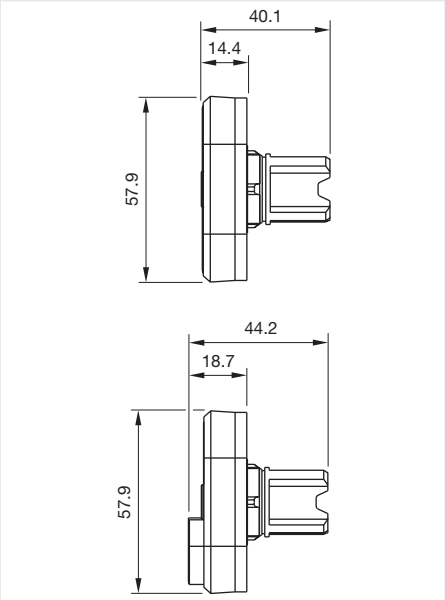

Dimensions [mm]

Equipment consisting of (schematic overview)

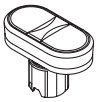

Actuator

Holder Page 516

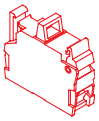

Switching element Page 518

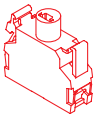

Illumination element Page 523

Each Part Number listed below includes all the black components shown in the 3D-drawing.

To obtain a complete unit, please select the red components from the pages shown.

General information

- With illuminative centre window
- Mounting depth, incl. front plate, see chapter drawings

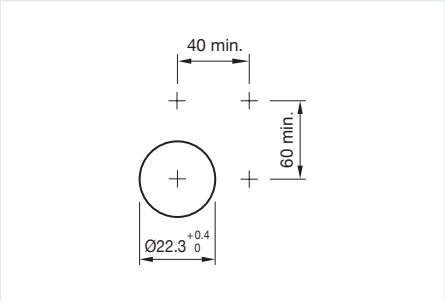

Mounting cut-outs [mm]

Actuator, Front dimension 58 mm x 30 mm

Switching action	Lens colour	Lens shape	Front bezel colour	Front bezel material	Housing colour	Housing material	Part No.	Wiring diagram	Component Layout
Momentary	Green/ Red	flush	Black	Plastic	Black	Plastic	45-2K31.15T0.000	201	25
	White / Black	flush	Black	Plastic	Black	Plastic	45-2K31.15V0.000	201	25
	Green/ Red	flush	Black	Plastic	Black	Plastic	45-2K31.16T0.000	201	25
	White / Black	flush	Black	Plastic	Black	Plastic	45-2K31.16V0.000	201	25
	Green/ Red	flush	Sand grey	Metal	Black	Plastic	45-2K31.35T0.000	201	25
	White / Black	flush	Sand grey	Metal	Black	Plastic	45-2K31.35V0.000	201	25
	Green/ Red	flush	Sand grey	Metal	Black	Plastic	45-2K31.36T0.000	201	25
	White / Black	flush	Sand grey	Metal	Black	Plastic	45-2K31.36V0.000	201	25

Wiring diagrams

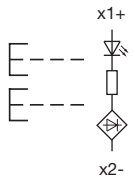

Wiring diagram 201

Component layouts

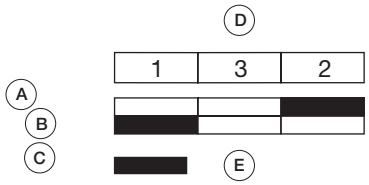

Component layout 25

A = Switching action
B = green (white) button pressed
C = red (black) button pressed
D = Arrangement switching element correspondens to designation of front adaptor
E = Switching element actuated

Versatile. Aesthetic and robust.
EAO Series 45 double pushbuttons.

Double pushbuttons are cost effective, compact pushbuttons, ideal for start/stop, up/down or similar machine functions.

- Compact construction – two switches in one
- Range of colours and marking options
- IP69K sealed and optional silicon covers
- Plastic or metal versions
- Up to three contacts for each pushbutton
- Optional illumination

www.eao.com/45

eao

Your Expert Partner for **Human Machine Interfaces**

01
02
03
04
09
14
17
18
19
22
31
41
45
51
56
57
61
70
71
82
84
92
96

Mushroom-head pushbutton Ø 30 mm, IP66, IP67, IP69K

Product can differ from the current configuration.

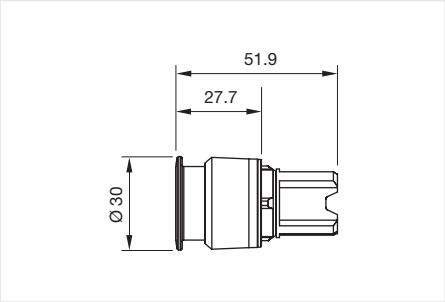

Dimensions [mm]

General information

- Mounting depth, incl. front plate, see chapter drawings

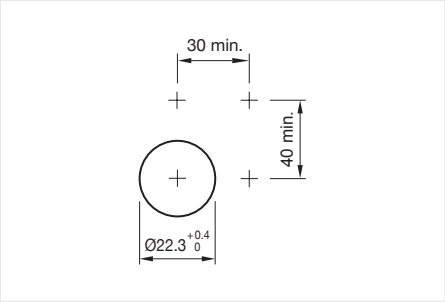

Mounting cut-outs [mm]

Equipment consisting of (schematic overview)

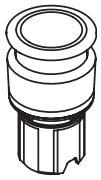

Actuator

Holder Page 516

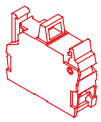

Switching element Page 518

Each Part Number listed below includes all the black components shown in the 3D-drawing.

To obtain a complete unit, please select the red components from the pages shown.

Actuator, Front dimension Ø 30 mm

Switching action	Lens colour	Front bezel colour	Front bezel material	Housing colour	Housing material	Part No.	Wiring diagram
Maintained	Black	Black	Plastic	Black	Plastic	45-2530.1810.000	73
	Red	Black	Plastic	Black	Plastic	45-2530.1820.000	73
	Yellow	Black	Plastic	Black	Plastic	45-2530.1840.000	73
	Black	Silver	Metal	Silver	Metal	45-2530.2810.000	73
	Red	Silver	Metal	Silver	Metal	45-2530.2820.000	73
	Black	Sand grey	Metal	Black	Plastic	45-2530.3810.000	73
	Red	Sand grey	Metal	Black	Plastic	45-2530.3820.000	73
Momentary	Black	Black	Plastic	Black	Plastic	45-2531.1810.000	72
	Red	Black	Plastic	Black	Plastic	45-2531.1820.000	72
	Yellow	Black	Plastic	Black	Plastic	45-2531.1840.000	72
	Green	Black	Plastic	Black	Plastic	45-2531.1850.000	72
	Black	Silver	Metal	Silver	Metal	45-2531.2810.000	72
	Red	Silver	Metal	Silver	Metal	45-2531.2820.000	72
	Yellow	Silver	Metal	Silver	Metal	45-2531.2840.000	72
	Green	Silver	Metal	Silver	Metal	45-2531.2850.000	72
	Black	Sand grey	Metal	Black	Plastic	45-2531.3810.000	72
	Red	Sand grey	Metal	Black	Plastic	45-2531.3820.000	72
	Yellow	Sand grey	Metal	Black	Plastic	45-2531.3840.000	72
	Green	Sand grey	Metal	Black	Plastic	45-2531.3850.000	72

Wiring diagrams

Wiring diagram 72	Wiring diagram 73

Come take a look at our LinkedIn profile today! *Be sure to give us a follow so that you can fully interact with us.*

https://www.linkedin.com/company/eao/

www.eao.com

eao

Your Expert Partner for **Human Machine Interfaces**

01 02 03 04 09 14 17 18 19 22 31 41 45 51 56 57 61 70 71 82 84 92 96

Mushroom-head pushbutton Ø 40 mm, IP66, IP67, IP69K

Product can differ from the current configuration.

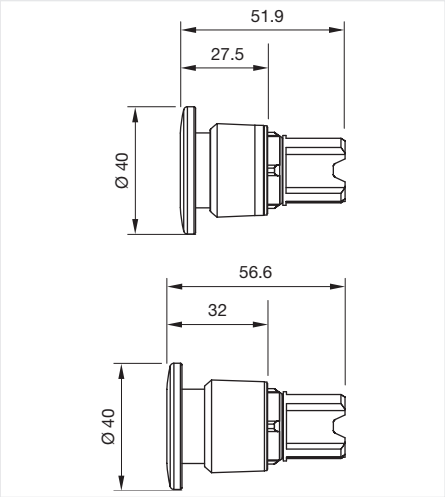

Dimensions [mm]

Equipment consisting of (schematic overview)

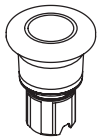

Actuator

Holder Page 516

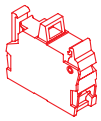

Switching element Page 518

Each Part Number listed below includes all the black components shown in the 3D-drawing.

To obtain a complete unit, please select the red components from the pages shown.

General information

- Mounting depth, incl. front plate, see chapter drawings

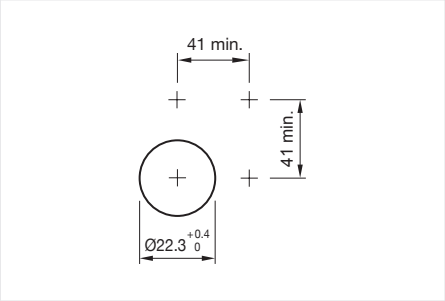

Mounting cut-outs [mm]

Actuator, Front dimension Ø 40 mm

Switching action	Lens colour	Front bezel colour	Front bezel material	Housing colour	Housing material	Part No.	Wiring diagram
Maintained	Black	Black	Plastic	Black	Plastic	45-2530.1910.000	73
	Red	Black	Plastic	Black	Plastic	45-2530.1920.000	73
	Yellow	Black	Plastic	Black	Plastic	45-2530.1940.000	73
	Green	Black	Plastic	Black	Plastic	45-2530.1950.000	73
	Black	Silver	Metal	Silver	Metal	45-2530.2910.000	73
	Red	Silver	Metal	Silver	Metal	45-2530.2920.000	73
	Yellow	Silver	Metal	Silver	Metal	45-2530.2940.000	73
	Black	Sand grey	Metal	Black	Plastic	45-2530.3910.000	73
	Red	Sand grey	Metal	Black	Plastic	45-2530.3920.000	73
Momentary	Black	Black	Plastic	Black	Plastic	45-2531.1910.000	72
	Red	Black	Plastic	Black	Plastic	45-2531.1920.000	72
	Yellow	Black	Plastic	Black	Plastic	45-2531.1940.000	72
	Green	Black	Plastic	Black	Plastic	45-2531.1950.000	72
	Black	Silver	Metal	Silver	Metal	45-2531.2910.000	72
	Red	Silver	Metal	Silver	Metal	45-2531.2920.000	72
	Yellow	Silver	Metal	Silver	Metal	45-2531.2940.000	72
	Green	Silver	Metal	Silver	Metal	45-2531.2950.000	72
	Black	Sand grey	Metal	Black	Plastic	45-2531.3910.000	72
	Red	Sand grey	Metal	Black	Plastic	45-2531.3920.000	72
	Yellow	Sand grey	Metal	Black	Plastic	45-2531.3940.000	72
	Green	Sand grey	Metal	Black	Plastic	45-2531.3950.000	72
Momentary / maintained	Black	Silver	Metal	Silver	Metal	45-2532.2910.000	208
	Red	Silver	Metal	Silver	Metal	45-2532.2920.000	208

Switching action	Lens colour	Front bezel colour	Front bezel material	Housing colour	Housing material	Part No.	Wiring diagram
Momentary / maintained	Black	Silver	Metal	Silver	Metal	45-2533.2910.000	209
	Red	Silver	Metal	Silver	Metal	45-2533.2920.000	209

Wiring diagrams

		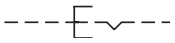	
Wiring diagram 72	Wiring diagram 73	Wiring diagram 208	Wiring diagram 209

Mushroom-head pushbutton Ø 60 mm, IP66, IP67, IP69K

Product can differ from the current configuration.

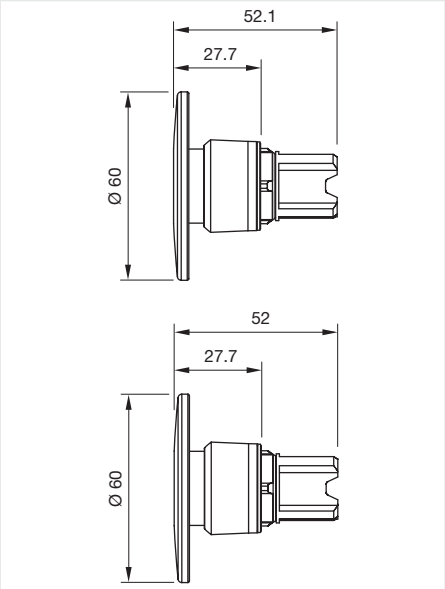

Dimensions [mm]

Equipment consisting of (schematic overview)

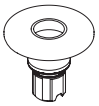

Actuator

Holder Page 516

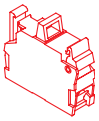

Switching element Page 518

Each Part Number listed below includes all the black components shown in the 3D-drawing.

To obtain a complete unit, please select the red components from the pages shown.

General information

- Mounting depth, incl. front plate, see chapter drawings

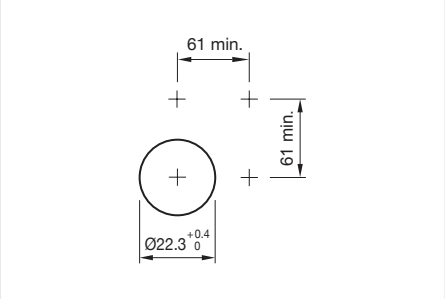

Mounting cut-outs [mm]

Actuator, Front dimension Ø 60 mm

Switching action	Lens colour	Front bezel colour	Front bezel material	Housing colour	Housing material	Part No.	Wiring diagram
Maintained	Black	Black	Plastic	Black	Plastic	45-2530.1A10.000	73
	Red	Black	Plastic	Black	Plastic	45-2530.1A20.000	73
	Black	Silver	Metal	Silver	Metal	45-2530.2A10.000	73
	Red	Silver	Metal	Silver	Metal	45-2530.2A20.000	73
Momentary	Black	Black	Plastic	Black	Plastic	45-2531.1A10.000	72
	Red	Black	Plastic	Black	Plastic	45-2531.1A20.000	72
	Yellow	Black	Plastic	Black	Plastic	45-2531.1A40.000	72
	Green	Black	Plastic	Black	Plastic	45-2531.1A50.000	72
	Black	Silver	Metal	Silver	Metal	45-2531.2A10.000	72
	Red	Silver	Metal	Silver	Metal	45-2531.2A20.000	72
	Yellow	Silver	Metal	Silver	Metal	45-2531.2A40.000	72
	Green	Silver	Metal	Silver	Metal	45-2531.2A50.000	72

Wiring diagrams

Wiring diagram 72	Wiring diagram 73

01
02
03
04
09
14
17
18
19
22
31
41
45
51
56
57
61
70
71
82
84
92
96

Mushroom-head pushbutton illuminated Ø 30 mm, IP66, IP67, IP69K

Product can differ from the current configuration.

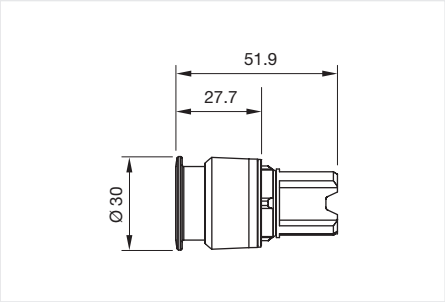

Dimensions [mm]

General information

- Mounting depth, incl. front plate, see chapter drawings

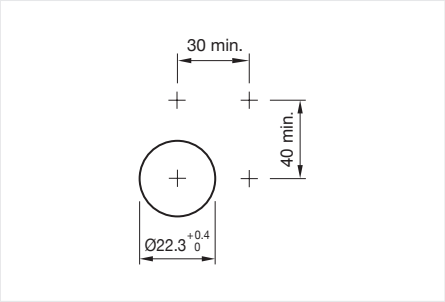

Mounting cut-outs [mm]

Equipment consisting of (schematic overview)

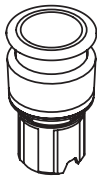

Actuator

Holder Page 516

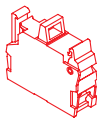

Switching element Page 518

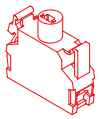

Illumination element Page 523

Each Part Number listed below includes all the black components shown in the 3D-drawing.

To obtain a complete unit, please select the red components from the pages shown.

Actuator, Front dimension Ø 30 mm

Switching action	Lens colour	Front bezel colour	Front bezel material	Housing colour	Housing material	Part No.	Wiring diagram
Maintained	Red	Black	Plastic	Black	Plastic	45-2630.18E0.000	192
	Yellow	Black	Plastic	Black	Plastic	45-2630.18G0.000	192
	Green	Black	Plastic	Black	Plastic	45-2630.18H0.000	192
	Blue	Black	Plastic	Black	Plastic	45-2630.18J0.000	192
	Colourless	Black	Plastic	Black	Plastic	45-2630.18K0.000	192
	Red	Silver	Metal	Silver	Metal	45-2630.28E0.000	192
	Amber	Silver	Metal	Silver	Metal	45-2630.28F0.000	192
	Yellow	Silver	Metal	Silver	Metal	45-2630.28G0.000	192
	Green	Silver	Metal	Silver	Metal	45-2630.28H0.000	192
	Blue	Silver	Metal	Silver	Metal	45-2630.28J0.000	192
	Colourless	Silver	Metal	Silver	Metal	45-2630.28K0.000	192
	Red	Sand grey	Metal	Black	Plastic	45-2630.38E0.000	192
	Yellow	Sand grey	Metal	Black	Plastic	45-2630.38G0.000	192
Momentary	Red	Black	Plastic	Black	Plastic	45-2631.18E0.000	191
	Yellow	Black	Plastic	Black	Plastic	45-2631.18G0.000	191
	Green	Black	Plastic	Black	Plastic	45-2631.18H0.000	191
	Blue	Black	Plastic	Black	Plastic	45-2631.18J0.000	191
	Colourless	Black	Plastic	Black	Plastic	45-2631.18K0.000	191
	White	Black	Plastic	Black	Plastic	45-2631.18N0.000	191
	Yellow	Silver	Metal	Silver	Metal	45-2631.28G0.000	191
	Green	Silver	Metal	Silver	Metal	45-2631.28H0.000	191
	White	Silver	Metal	Silver	Metal	45-2631.28N0.000	191
	Yellow	Sand grey	Metal	Black	Plastic	45-2631.38G0.000	191
	Green	Sand grey	Metal	Black	Plastic	45-2631.38H0.000	191
	Colourless	Sand grey	Metal	Black	Plastic	45-2631.38K0.000	191
	White	Sand grey	Metal	Black	Plastic	45-2631.38N0.000	191

Wiring diagrams

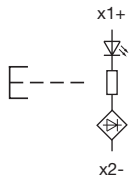

Wiring diagram 191

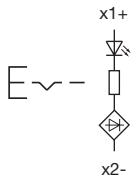

Wiring diagram 192

Mushroom-head pushbutton illuminated Ø 40 mm, IP66, IP67, IP69K

Product can differ from the current configuration.

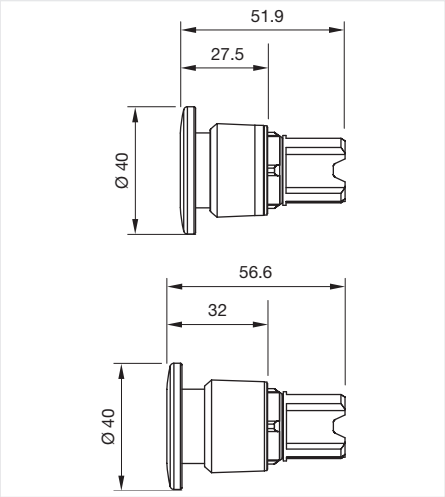

Dimensions [mm]

Equipment consisting of (schematic overview)

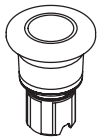

Actuator

Holder Page 516

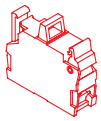

Switching element Page 518

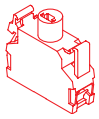

Illumination element Page 523

Each Part Number listed below includes all the black components shown in the 3D-drawing.

To obtain a complete unit, please select the red components from the pages shown.

General information

- Mounting depth, incl. front plate, see chapter drawings

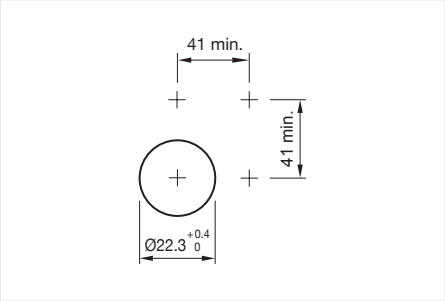

Mounting cut-outs [mm]

Actuator, Front dimension Ø 40 mm

Switching action	Lens colour	Front bezel colour	Front bezel material	Housing colour	Housing material	Part No.	Wiring diagram
Maintained	Red	Black	Plastic	Black	Plastic	45-2630.19E0.000	192
	Yellow	Black	Plastic	Black	Plastic	45-2630.19G0.000	192
	Green	Black	Plastic	Black	Plastic	45-2630.19H0.000	192
	Blue	Black	Plastic	Black	Plastic	45-2630.19J0.000	192
	Colourless	Black	Plastic	Black	Plastic	45-2630.19K0.000	192
	Red	Silver	Metal	Silver	Metal	45-2630.29E0.000	192
	Amber	Silver	Metal	Silver	Metal	45-2630.29F0.000	192
	Yellow	Silver	Metal	Silver	Metal	45-2630.29G0.000	192
	Green	Silver	Metal	Silver	Metal	45-2630.29H0.000	192
	Blue	Silver	Metal	Silver	Metal	45-2630.29J0.000	192
	Colourless	Silver	Metal	Silver	Metal	45-2630.29K0.000	192
	Red	Sand grey	Metal	Black	Plastic	45-2630.39E0.000	192
	Yellow	Sand grey	Metal	Black	Plastic	45-2630.39G0.000	192
Momentary	Yellow	Black	Plastic	Black	Plastic	45-2631.19G0.000	191
	Green	Black	Plastic	Black	Plastic	45-2631.19H0.000	191
	Colourless	Black	Plastic	Black	Plastic	45-2631.19K0.000	191
	White	Black	Plastic	Black	Plastic	45-2631.19N0.000	191
	Amber	Silver	Metal	Silver	Metal	45-2631.29F0.000	191
	Yellow	Silver	Metal	Silver	Metal	45-2631.29G0.000	191
	Green	Silver	Metal	Silver	Metal	45-2631.29H0.000	191
	White	Silver	Metal	Silver	Metal	45-2631.29N0.000	191
	Yellow	Sand grey	Metal	Black	Plastic	45-2631.39G0.000	191

Switching action	Lens colour	Front bezel colour	Front bezel material	Housing colour	Housing material	Part No.	Wiring diagram
Momentary	Green	Sand grey	Metal	Black	Plastic	45-2631.39H0.000	191
	Colourless	Sand grey	Metal	Black	Plastic	45-2631.39K0.000	191
	White	Sand grey	Metal	Black	Plastic	45-2631.39N0.000	191
	Red	Silver	Metal	Silver	Metal	45-2632.29E0.000	191
	Green	Silver	Metal	Silver	Metal	45-2632.29H0.000	191
	Red	Silver	Metal	Silver	Metal	45-2633.29E0.000	191
	White	Silver	Metal	Silver	Metal	45-2633.29N0.000	191

Wiring diagrams

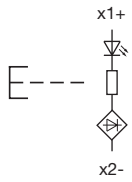

Wiring diagram 191

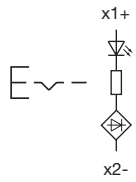

Wiring diagram 192

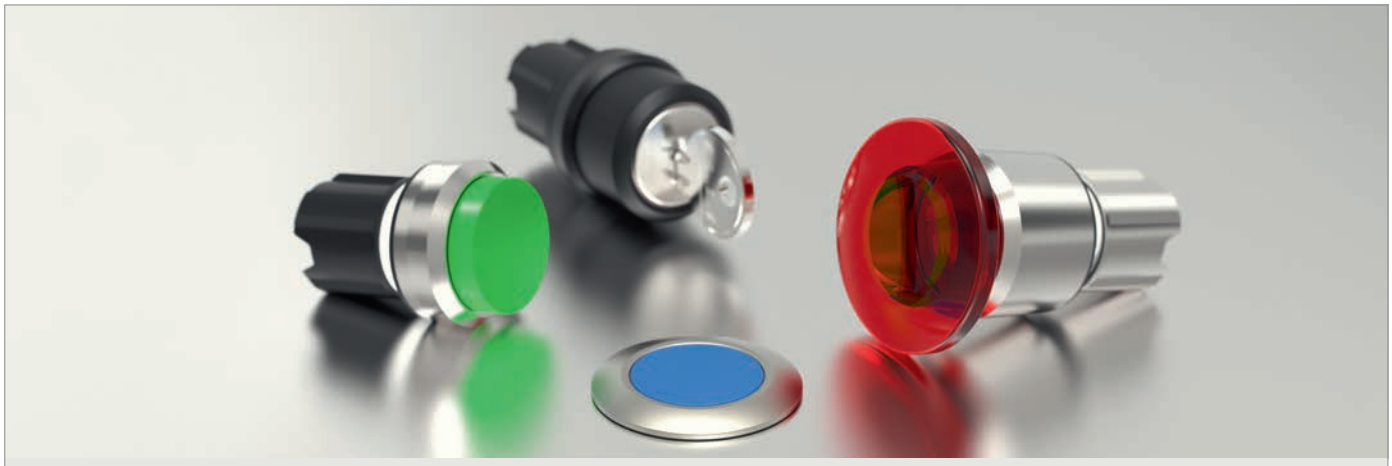

Innovative and comprehensive.
EAO's new Series 45.

Modular, aesthetic and robust for every conceivable HMI function of machine operating.

- Comprehensive and modular Series
- Rugged in use (up to IP69K)
- Easy to assemble and use
- Modern design with many options
- Value added services
- Long service life (up to 10 milion switching cycles, depending on function)

eao

www.eao.com

Your Expert Partner for **Human Machine Interfaces**

Mushroom-head pushbutton illuminated Ø 60 mm, IP66, IP67, IP69K

Product can differ from the current configuration.

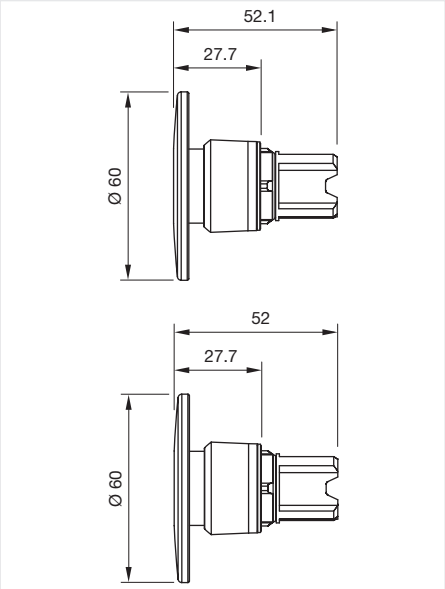

Dimensions [mm]

Equipment consisting of (schematic overview)

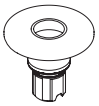

Actuator

Holder Page 516

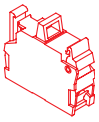

Switching element Page 518

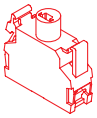

Illumination element Page 523

Each Part Number listed below includes all the black components shown in the 3D-drawing.

To obtain a complete unit, please select the red components from the pages shown.

General information

- Mounting depth, incl. front plate, see chapter drawings

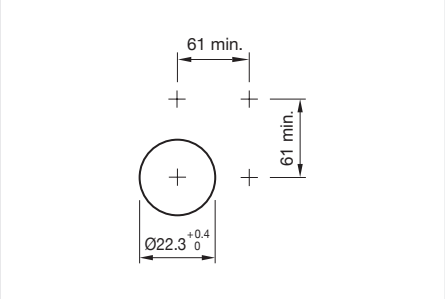

Mounting cut-outs [mm]

Actuator, Front dimension Ø 60 mm

Switching action	Lens colour	Front bezel colour	Front bezel material	Housing colour	Housing material	Part No.	Wiring diagram
Maintained	Red	Silver	Metal	Silver	Metal	45-2630.2AE0.000	192
	Yellow	Silver	Metal	Silver	Metal	45-2630.2AG0.000	192
	Green	Silver	Metal	Silver	Metal	45-2630.2AH0.000	192
	Blue	Silver	Metal	Silver	Metal	45-2630.2AJ0.000	192
	Colourless	Silver	Metal	Silver	Metal	45-2630.2AK0.000	192
Momentary	Amber	Silver	Metal	Silver	Metal	45-2631.2AF0.000	191
	Yellow	Silver	Metal	Silver	Metal	45-2631.2AG0.000	191
	Green	Silver	Metal	Silver	Metal	45-2631.2AH0.000	191
	White	Silver	Metal	Silver	Metal	45-2631.2AN0.000	191

Wiring diagrams

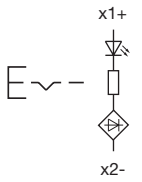

Wiring diagram 192

Palm switch, IP66, IP67, IP69K

Product can differ from the current configuration.

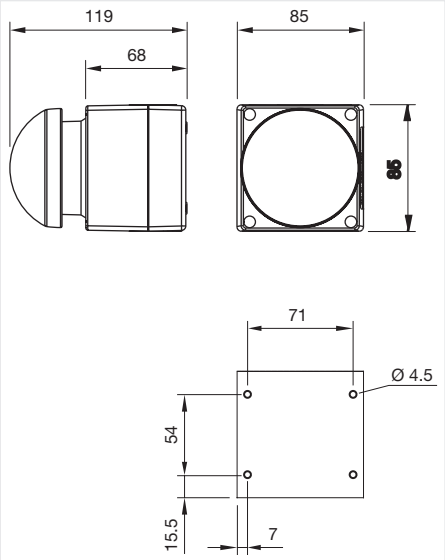

Dimensions [mm]

Equipment consisting of (schematic overview)

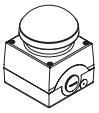

Actuator

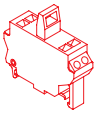

Switching element Page 521

Each Part Number listed below includes all the black components shown in the 3D-drawing.

To obtain a complete unit, please select the red components from the pages shown.

General information

- Mounting depth, incl. front plate, see chapter drawings

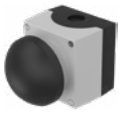

Actuator, Front dimension 85 mm x 85 mm

Product attributes	Switching action	Lens colour	Housing colour	Housing material	Part No.
	Momentary	Black	Grey	Plastic	45-481.1810
		Black	Grey	Metal	45-481.2810
Pull release	Maintained	Red	Yellow	Plastic	45-482.1810
		Red	Yellow	Metal	45-482.2810

Selector switch 2 positions short lever, IP66, IP67, IP69K

Equipment consisting of (schematic overview)

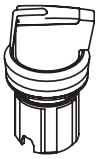

Actuator

Holder Page 516

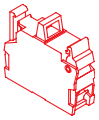

Switching element Page 518

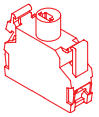

Illumination element Page 523

Each Part Number listed below includes all the black components shown in the 3D-drawing.

To obtain a complete unit, please select the red components from the pages shown.

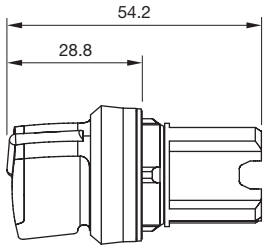

Dimensions [mm]

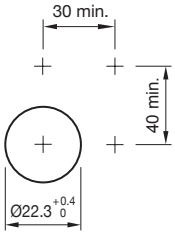

Mounting cut-outs [mm]

Product can differ from the current configuration.

General information

- External diameter of the short lever 32.3 mm
- Mounting depth, incl. front plate, see chapter drawings

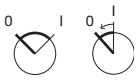

Actuator, Front dimension Ø 29,5 mm

Switching action	Switching angle	Lever colour	Front bezel colour	Front bezel material	Housing material	Part No.	Wiring diagram
Rest - Maintained	90° right	Red	Black	Plastic	Plastic	45-2828.1C20.001	214
	90° right	Yellow	Black	Plastic	Plastic	45-2828.1C40.001	214
	90° right	Green	Black	Plastic	Plastic	45-2828.1C50.001	214
	90° right	Blue	Black	Plastic	Plastic	45-2828.1C60.001	214
	90° right	White	Black	Plastic	Plastic	45-2828.1C90.001	214
	90° right	Red	Silver	Metal	Metal	45-2828.2C20.001	214
	90° right	Amber	Silver	Metal	Metal	45-2828.2C30.001	214
	90° right	Green	Silver	Metal	Metal	45-2828.2C50.001	214
	90° right	White	Silver	Metal	Metal	45-2828.2C90.001	214
	90° right	Red	Sand grey	Metal	Plastic	45-2828.3C20.001	214
	90° right	Yellow	Sand grey	Metal	Plastic	45-2828.3C40.001	214
	90° right	Green	Sand grey	Metal	Plastic	45-2828.3C50.001	214
	90° right	Blue	Sand grey	Metal	Plastic	45-2828.3C60.001	214
	90° right	White	Sand grey	Metal	Plastic	45-2828.3C90.001	214
Rest - Momentary	45° right	Red	Black	Plastic	Plastic	45-2844.1C20.006	215
	45° right	Yellow	Black	Plastic	Plastic	45-2844.1C40.006	215
	45° right	Green	Black	Plastic	Plastic	45-2844.1C50.006	215
	45° right	Blue	Black	Plastic	Plastic	45-2844.1C60.006	215
	45° right	White	Black	Plastic	Plastic	45-2844.1C90.006	215
	45° right	Red	Silver	Metal	Metal	45-2844.2C20.006	215
	45° right	Yellow	Silver	Metal	Metal	45-2844.2C40.006	215
	45° right	Green	Silver	Metal	Metal	45-2844.2C50.006	215
	45° right	Blue	Silver	Metal	Metal	45-2844.2C60.006	215
	45° right	White	Silver	Metal	Metal	45-2844.2C90.006	215
	45° right	Red	Sand grey	Metal	Plastic	45-2844.3C20.006	215
	45° right	Yellow	Sand grey	Metal	Plastic	45-2844.3C40.006	215

45 Raised design

Switching action	Switching angle	Lever colour	Front bezel colour	Front bezel material	Housing material	Part No.	Wiring diagram
Rest - Momentary	45° right	Green	Sand grey	Metal	Plastic	45-2844.3C50.006	215
	45° right	Blue	Sand grey	Metal	Plastic	45-2844.3C60.006	215
	45° right	White	Sand grey	Metal	Plastic	45-2844.3C90.006	215

Wiring diagrams

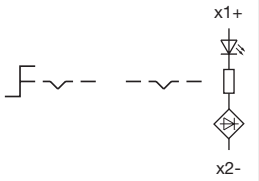

Wiring diagram 214

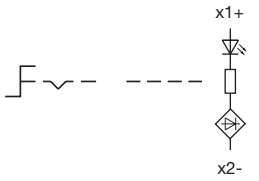

Wiring diagram 215

Selector switch 2 positions long lever, IP66, IP67, IP69K

Equipment consisting of (schematic overview)

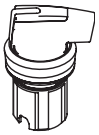

Actuator

Holder Page 516

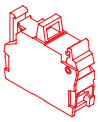

Switching element Page 518

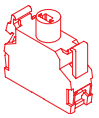

Illumination element Page 523

Each Part Number listed below includes all the black components shown in the 3D-drawing.

To obtain a complete unit, please select the red components from the pages shown.

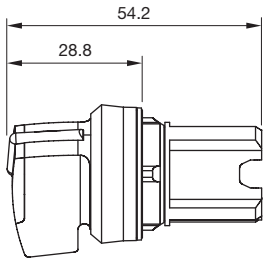

Dimensions [mm]

Product can differ from the current configuration.

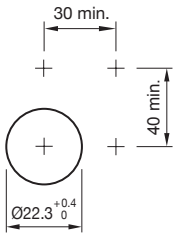

Mounting cut-outs [mm]

General information

- External diameter of the long lever 44.8 mm
- Mounting depth, incl. front plate, see chapter drawings

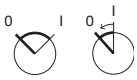

Actuator, Front dimension Ø 29,5 mm

Switching action	Switching angle	Lever colour	Front bezel colour	Front bezel material	Housing material	Part No.	Wiring diagram
Rest - Maintained	90° right	Red	Black	Plastic	Plastic	45-2828.1D20.001	214
	90° right	White	Black	Plastic	Plastic	45-2828.1D90.001	214
	90° right	Red	Silver	Metal	Metal	45-2828.2D20.001	214
	90° right	Yellow	Silver	Metal	Metal	45-2828.2D40.001	214
	90° right	Green	Silver	Metal	Metal	45-2828.2D50.001	214
	90° right	Blue	Silver	Metal	Metal	45-2828.2D60.001	214
	90° right	White	Silver	Metal	Metal	45-2828.2D90.001	214
	90° right	Red	Sand grey	Metal	Plastic	45-2828.3D20.001	214
	90° right	White	Sand grey	Metal	Plastic	45-2828.3D90.001	214
Rest - Momentary	45° right	Yellow	Silver	Metal	Metal	45-2844.2D40.006	215
	45° right	Green	Silver	Metal	Metal	45-2844.2D50.006	215
	45° right	Blue	Silver	Metal	Metal	45-2844.2D60.006	215
	45° right	White	Silver	Metal	Metal	45-2844.2D90.006	215

01
02
03
04
09
14
17
18
19
22
31
41
45
51
56
57
61
70
71
82
84
92
96

Wiring diagrams

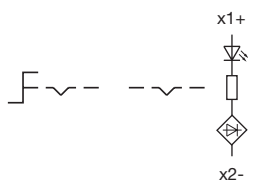

Wiring diagram 214

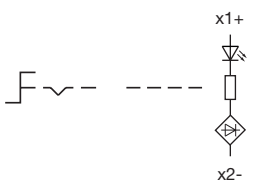

Wiring diagram 215

Come take a look at our YouTube profile today! *Be sure to give us a follow so that you can fully interact with us.*

https://www.youtube.com/user/eaoswitches

www.eao.com

eao

Your Expert Partner for Human Machine Interfaces

Selector switch 2 positions round lever, IP66, IP67, IP69K

Equipment consisting of (schematic overview)

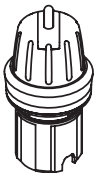

Actuator

Holder Page 516

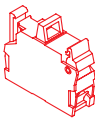

Switching element Page 518

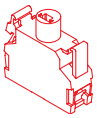

Illumination element Page 523

Each Part Number listed below includes all the black components shown in the 3D-drawing.

To obtain a complete unit, please select the red components from the pages shown.

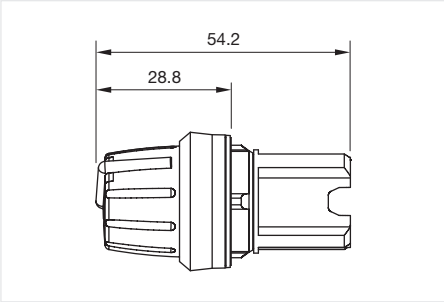

Dimensions [mm]

Product can differ from the current configuration.

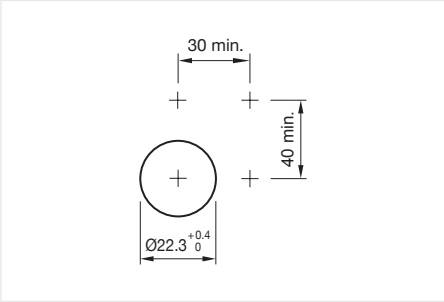

Mounting cut-outs [mm]

General information

- Mounting depth, incl. front plate, see chapter drawings

Actuator, Front dimension Ø 29,5 mm

Switching action	Switching angle	Lever colour	Front bezel colour	Front bezel material	Housing material	Part No.	Wiring diagram
Rest - Maintained	90° right	Red	Black	Plastic	Plastic	45-2828.1E20.001	214
	90° right	White	Black	Plastic	Plastic	45-2828.1E90.001	214
	90° right	Red	Sand grey	Metal	Plastic	45-2828.3E20.001	214
	90° right	White	Sand grey	Metal	Plastic	45-2828.3E90.001	214

Wiring diagrams

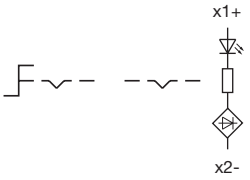

Wiring diagram 214

01
02
03
04
09
14
17
18
19
22
31
41
45
51
56
57
61
70
71
82
84
92
96

Selector switch 3 positions short lever, IP66, IP67, IP69K

Product can differ from the current configuration.

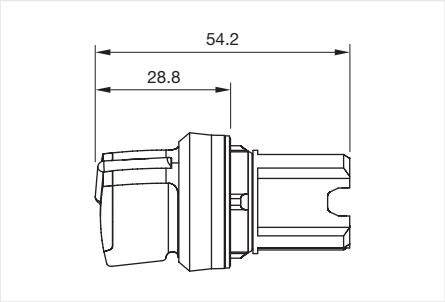

Dimensions [mm]

General information

- External diameter of the short lever 32.3 mm
- Mounting depth, incl. front plate, see chapter drawings

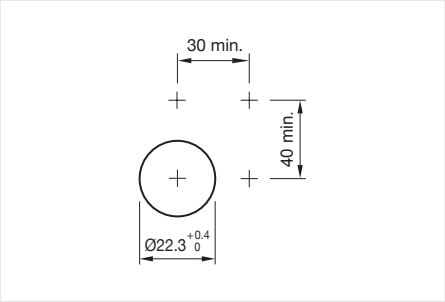

Mounting cut-outs [mm]

Equipment consisting of (schematic overview)

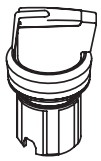

Actuator

Holder Page 516

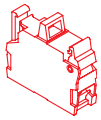

Switching element Page 518

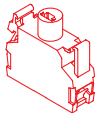

Illumination element Page 523

Each Part Number listed below includes all the black components shown in the 3D-drawing.

To obtain a complete unit, please select the red components from the pages shown.

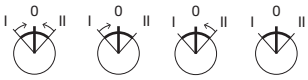

Actuator, Front dimension Ø 29,5 mm

Switching action	Switching angle	Lever colour	Front bezel colour	Front bezel material	Housing material	Part No.	Wiring diagram
Momentary - Rest - Momentary	45° left / 45° right	Red	Black	Plastic	Plastic	45-280S.1C20.003	217
	45° left / 45° right	Yellow	Black	Plastic	Plastic	45-280S.1C40.003	217
	45° left / 45° right	Green	Black	Plastic	Plastic	45-280S.1C50.003	217
	45° left / 45° right	Blue	Black	Plastic	Plastic	45-280S.1C60.003	217
	45° left / 45° right	White	Black	Plastic	Plastic	45-280S.1C90.003	217
	45° left / 45° right	Red	Silver	Metal	Metal	45-280S.2C20.003	217
	45° left / 45° right	Amber	Silver	Metal	Metal	45-280S.2C30.003	217
	45° left / 45° right	Yellow	Silver	Metal	Metal	45-280S.2C40.003	217
	45° left / 45° right	Green	Silver	Metal	Metal	45-280S.2C50.003	217
	45° left / 45° right	Blue	Silver	Metal	Metal	45-280S.2C60.003	217
	45° left / 45° right	White	Silver	Metal	Metal	45-280S.2C90.003	217
	45° left / 45° right	Red	Sand grey	Metal	Plastic	45-280S.3C20.003	217
	45° left / 45° right	Yellow	Sand grey	Metal	Plastic	45-280S.3C40.003	217
	45° left / 45° right	Green	Sand grey	Metal	Plastic	45-280S.3C50.003	217
	45° left / 45° right	Blue	Sand grey	Metal	Plastic	45-280S.3C60.003	217
	45° left / 45° right	White	Sand grey	Metal	Plastic	45-280S.3C90.003	217
Momentary - Rest - Maintained	45° left / 45° right	Red	Black	Plastic	Plastic	45-280X.1C20.003	219
	45° left / 45° right	Yellow	Black	Plastic	Plastic	45-280X.1C40.003	219
	45° left / 45° right	Green	Black	Plastic	Plastic	45-280X.1C50.003	219
	45° left / 45° right	Blue	Black	Plastic	Plastic	45-280X.1C60.003	219
	45° left / 45° right	White	Black	Plastic	Plastic	45-280X.1C90.003	219
	45° left / 45° right	White	Silver	Metal	Metal	45-280X.2C90.003	219
	45° left / 45° right	Red	Sand grey	Metal	Plastic	45-280X.3C20.003	219
	45° left / 45° right	Yellow	Sand grey	Metal	Plastic	45-280X.3C40.003	219
	45° left / 45° right	Green	Sand grey	Metal	Plastic	45-280X.3C50.003	219
	45° left / 45° right	Blue	Sand grey	Metal	Plastic	45-280X.3C60.003	219

Switching action	Switching angle	Lever colour	Front bezel colour	Front bezel material	Housing material	Part No.	Wiring diagram
Momentary - Rest - Maintained	45° left / 45° right	White	Sand grey	Metal	Plastic	45-280X.3C90.003	219
Maintained - Rest - Momentary	45° left / 45° right	Red	Black	Plastic	Plastic	45-2816.1C20.003	218
	45° left / 45° right	Yellow	Black	Plastic	Plastic	45-2816.1C40.003	218
	45° left / 45° right	Green	Black	Plastic	Plastic	45-2816.1C50.003	218
	45° left / 45° right	Blue	Black	Plastic	Plastic	45-2816.1C60.003	218
	45° left / 45° right	White	Black	Plastic	Plastic	45-2816.1C90.003	218
	45° left / 45° right	Red	Silver	Metal	Metal	45-2816.2C20.003	218
	45° left / 45° right	Green	Silver	Metal	Metal	45-2816.2C50.003	218
	45° left / 45° right	White	Silver	Metal	Metal	45-2816.2C90.003	218
	45° left / 45° right	Red	Sand grey	Metal	Plastic	45-2816.3C20.003	218
	45° left / 45° right	Yellow	Sand grey	Metal	Plastic	45-2816.3C40.003	218
	45° left / 45° right	Green	Sand grey	Metal	Plastic	45-2816.3C50.003	218
	45° left / 45° right	Blue	Sand grey	Metal	Plastic	45-2816.3C60.003	218
	45° left / 45° right	White	Sand grey	Metal	Plastic	45-2816.3C90.003	218
Maintained - Rest - Maintained	45° left / 45° right	Red	Black	Plastic	Plastic	45-2819.1C20.003	216
	45° left / 45° right	Yellow	Black	Plastic	Plastic	45-2819.1C40.003	216
	45° left / 45° right	Green	Black	Plastic	Plastic	45-2819.1C50.003	216
	45° left / 45° right	Blue	Black	Plastic	Plastic	45-2819.1C60.003	216
	45° left / 45° right	White	Black	Plastic	Plastic	45-2819.1C90.003	216
	45° left / 45° right	Red	Silver	Metal	Metal	45-2819.2C20.003	216
	45° left / 45° right	Yellow	Silver	Metal	Metal	45-2819.2C40.003	216
	45° left / 45° right	Green	Silver	Metal	Metal	45-2819.2C50.003	216
	45° left / 45° right	White	Silver	Metal	Metal	45-2819.2C90.003	216
	45° left / 45° right	Red	Sand grey	Metal	Plastic	45-2819.3C20.003	216
	45° left / 45° right	Yellow	Sand grey	Metal	Plastic	45-2819.3C40.003	216
	45° left / 45° right	Green	Sand grey	Metal	Plastic	45-2819.3C50.003	216
	45° left / 45° right	Blue	Sand grey	Metal	Plastic	45-2819.3C60.003	216
	45° left / 45° right	White	Sand grey	Metal	Plastic	45-2819.3C90.003	216

Wiring diagrams

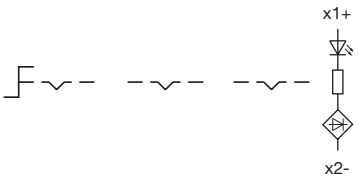

Wiring diagram 216

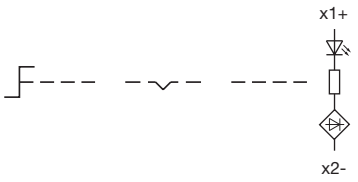

Wiring diagram 217

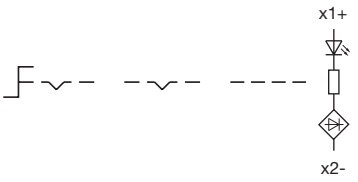

Wiring diagram 218

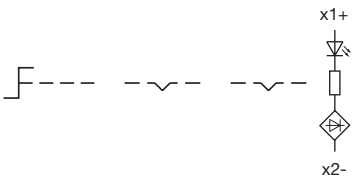

Wiring diagram 219

01
02
03
04
09
14
17
18
19
22
31
41
45
51
56
57
61
70
71
82
84
92
96

Selector switch 3 positions long lever, IP66, IP67, IP69K

Product can differ from the current configuration.

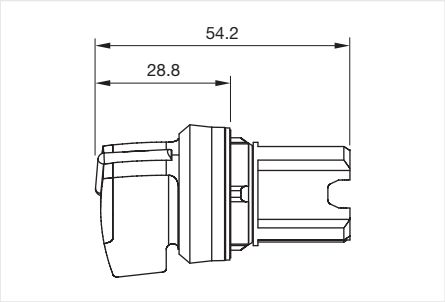

Dimensions [mm]

General information

- External diameter of the long lever 44.8 mm
- Mounting depth, incl. front plate, see chapter drawings

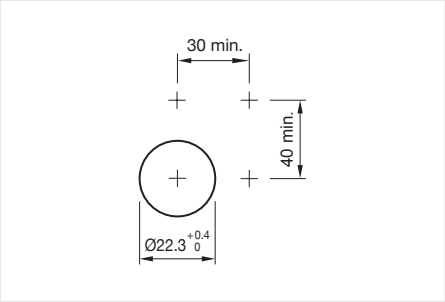

Mounting cut-outs [mm]

Equipment consisting of (schematic overview)

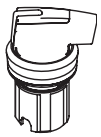

Actuator

Holder Page 516

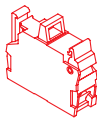

Switching element Page 518

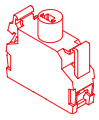

Illumination element Page 523

Each Part Number listed below includes all the black components shown in the 3D-drawing.

To obtain a complete unit, please select the red components from the pages shown.

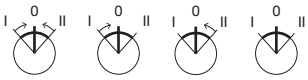

Actuator, Front dimension Ø 29,5 mm

Switching action	Switching angle	Lever colour	Front bezel colour	Front bezel material	Housing material	Part No.	Wiring diagram
Momentary - Rest - Momentary	45° left / 45° right	Red	Silver	Metal	Metal	45-280S.2D20.003	217
	45° left / 45° right	Green	Silver	Metal	Metal	45-280S.2D50.003	217
	45° left / 45° right	White	Silver	Metal	Metal	45-280S.2D90.003	217
Momentary - Rest - Maintained	45° left / 45° right	Red	Silver	Metal	Metal	45-280X.2D20.003	219
	45° left / 45° right	White	Silver	Metal	Metal	45-280X.2D90.003	219
Maintained - Rest - Momentary	45° left / 45° right	Red	Silver	Metal	Metal	45-2816.2D20.003	218
	45° left / 45° right	White	Silver	Metal	Metal	45-2816.2D90.003	218
Maintained - Rest - Maintained	45° left / 45° right	Red	Silver	Metal	Metal	45-2819.2D20.003	216
	45° left / 45° right	Green	Silver	Metal	Metal	45-2819.2D50.003	216
	45° left / 45° right	White	Silver	Metal	Metal	45-2819.2D90.003	216

Wiring diagrams

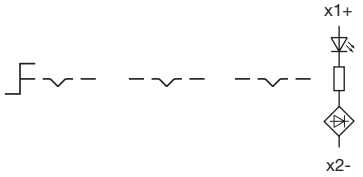

Wiring diagram 216

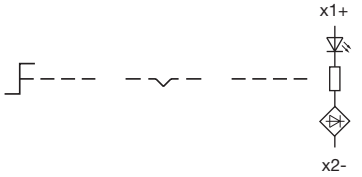

Wiring diagram 217

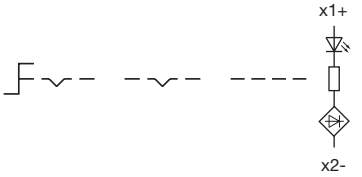

Wiring diagram 218

Wiring diagrams

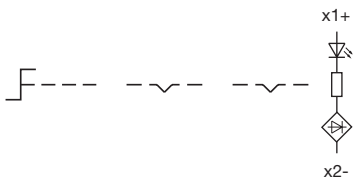

Wiring diagram 219

Innovative and comprehensive.
EAO's new Series 45.

Modular, aesthetic and robust for every conceivable HMI function of machine operating.

- Comprehensive and modular Series
- Rugged in use (up to IP69K)
- Easy to assemble and use
- Modern design with many options
- Value added services
- Long service life (up to 10 milion switching cycles, depending on function)

eao

www.eao.com

Your Expert Partner for **Human Machine Interfaces**

01
02
03
04
09
14
17
18
19
22
31
41
45
51
56
57
61
70
71
82
84
92
96

Selector switch 4 positions round lever, IP66, IP67, IP69K

Product can differ from the current configuration.

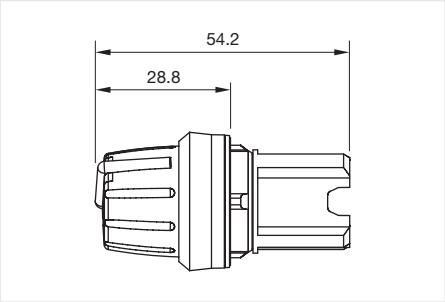

Dimensions [mm]

General information

- Use only with holder for 4 elements
- Mounting depth, incl. front plate, see chapter drawings

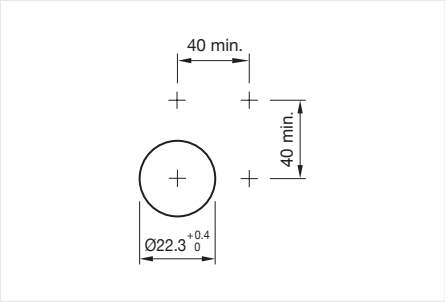

Mounting cut-outs [mm]

Equipment consisting of (schematic overview)

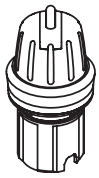

Actuator

Holder Page 517

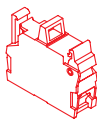

Switching element Page 518

Each Part Number listed below includes all the black components shown in the 3D-drawing.

To obtain a complete unit, please select the red components from the pages shown.

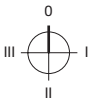

Actuator, Front dimension Ø 29,5 mm

Switching action	Switching angle	Lever colour	Front bezel colour	Front bezel material	Housing material	Part No.	Wiring diagram
Maintained - Maintained - Maintained - Maintained	4 x 90°	White	Black	Plastic	Plastic	45-2845.1E90.002	220
	4 x 90°	White	Silver	Metal	Metal	45-2845.2E90.002	220
	4 x 90°	White	Sand grey	Metal	Plastic	45-2845.3E90.002	220

Wiring diagrams

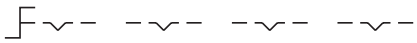

Wiring diagram 220

Keylock switch 2 positions, IP66, IP67, IP69K

Equipment consisting of (schematic overview)

Actuator

Holder Page 516

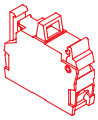

Switching element Page 518

Each Part Number listed below includes all the black components shown in the 3D-drawing.

To obtain a complete unit, please select the red components from the pages shown.

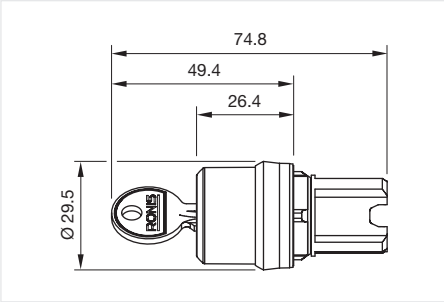

Dimensions [mm]

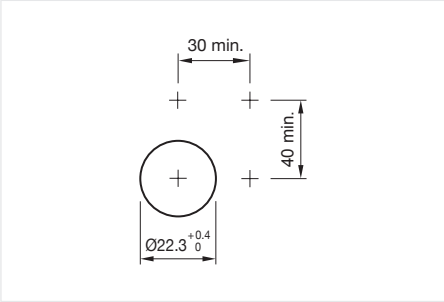

Mounting cut-outs [mm]

Product can differ from the current configuration.

General information

- The standard lock: RONIS, T254
- Mounting depth, incl. front plate, see chapter drawings

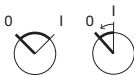

Actuator, Front dimension Ø 29,5 mm

Switching action	Switching angle	Front bezel colour	Front bezel material	Housing material	Part No.	Wiring diagram
Rest (a) - Maintained (a)	90° right	Black	Plastic	Plastic	45-290H.1000.111	79
	90° right	Silver	Metal	Metal	45-290H.2000.111	79
	90° right	Sand grey	Metal	Plastic	45-290H.3000.111	79
Rest (a) - Maintained	90° right	Black	Plastic	Plastic	45-290J.1000.111	79
	90° right	Silver	Metal	Metal	45-290J.2000.111	79
	90° right	Sand grey	Metal	Plastic	45-290J.3000.111	79
Rest (a) - Momentary	45° right	Black	Plastic	Plastic	45-290K.1000.116	78
	45° right	Silver	Metal	Metal	45-290K.2000.116	78
	45° right	Sand grey	Metal	Plastic	45-290K.3000.116	78
Rest - Maintained (a)	90° right	Black	Plastic	Plastic	45-2925.1000.111	79
	90° right	Silver	Metal	Metal	45-2925.2000.111	79
	90° right	Sand grey	Metal	Plastic	45-2925.3000.111	79

a = Key remove

Wiring diagrams

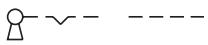

Wiring diagram 78

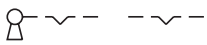

Wiring diagram 79

01
02
03
04
09
14
17
18
19
22
31
41
45
51
56
57
61
70
71
82
84
92
96

Keylock switch 3 positions, IP66, IP67, IP69K

Product can differ from the current configuration.

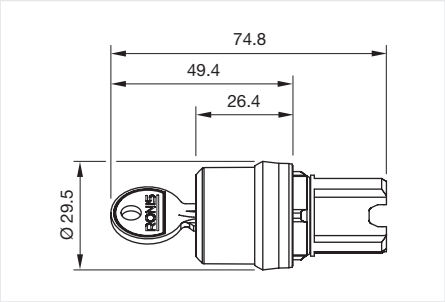

Dimensions [mm]

General information

- The standard lock: RONIS, T254
- Mounting depth, incl. front plate, see chapter drawings

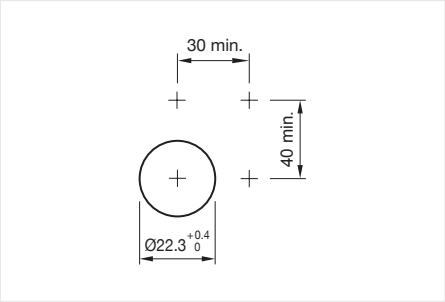

Mounting cut-outs [mm]

Equipment consisting of (schematic overview)

Actuator

Holder Page 516

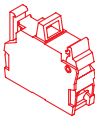

Switching element Page 518

Each Part Number listed below includes all the black components shown in the 3D-drawing.

To obtain a complete unit, please select the red components from the pages shown.

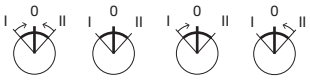

Actuator, Front dimension Ø 29,5 mm

Switching action	Switching angle	Front bezel colour	Front bezel material	Housing material	Part No.	Wiring diagram
Maintained (a) - Rest - Momentary	45° left / 45° right	Black	Plastic	Plastic	45-290A.1000.113	81
	45° left / 45° right	Silver	Metal	Metal	45-290A.2000.113	81
Maintained (a) - Rest - Maintained (a)	45° left / 45° right	Black	Plastic	Plastic	45-290C.1000.113	83
	45° left / 45° right	Silver	Metal	Metal	45-290C.2000.113	83
	45° left / 45° right	Sand grey	Metal	Plastic	45-290C.3000.113	83
Maintained (a) - Rest - Maintained	45° left / 45° right	Black	Plastic	Plastic	45-290D.1000.113	83
	45° left / 45° right	Silver	Metal	Metal	45-290D.2000.113	83
	45° left / 45° right	Sand grey	Metal	Plastic	45-290D.3000.113	83
Maintained (a) - Rest (a) - Momentary	45° left / 45° right	Black	Plastic	Plastic	45-290E.1000.113	81
	45° left / 45° right	Silver	Metal	Metal	45-290E.2000.113	81
Maintained (a) - Rest (a) - Maintained (a)	45° left / 45° right	Black	Plastic	Plastic	45-290F.1000.113	83
	45° left / 45° right	Silver	Metal	Metal	45-290F.2000.113	83
	45° left / 45° right	Sand grey	Metal	Plastic	45-290F.3000.113	83
Maintained (a) - Rest (a) - Maintained	45° left / 45° right	Black	Plastic	Plastic	45-290G.1000.113	83
	45° left / 45° right	Silver	Metal	Metal	45-290G.2000.113	83
	45° left / 45° right	Sand grey	Metal	Plastic	45-290G.3000.113	83
Momentary - Rest - Maintained (a)	45° left / 45° right	Black	Plastic	Plastic	45-290W.1000.113	80
Momentary - Rest (a) - Momentary	45° left / 45° right	Black	Plastic	Plastic	45-290Z.1000.113	82
	45° left / 45° right	Silver	Metal	Metal	45-290Z.2000.113	82
	45° left / 45° right	Sand grey	Metal	Plastic	45-290Z.3000.113	82
Momentary - Rest (a) - Maintained (a)	45° left / 45° right	Black	Plastic	Plastic	45-2910.1000.113	80
	45° left / 45° right	Silver	Metal	Metal	45-2910.2000.113	80
Momentary - Rest (a) - Maintained	45° left / 45° right	Black	Plastic	Plastic	45-2911.1000.113	80
	45° left / 45° right	Silver	Metal	Metal	45-2911.2000.113	80
	45° left / 45° right	Sand grey	Metal	Plastic	45-2911.3000.113	80

a = Key remove

Switching action	Switching angle	Front bezel colour	Front bezel material	Housing material	Part No.	Wiring diagram
Maintained - Rest - Maintained (a)	45° left / 45° right	Black	Plastic	Plastic	45-2917.1000.113	83
	45° left / 45° right	Silver	Metal	Metal	45-2917.2000.113	83
	45° left / 45° right	Sand grey	Metal	Plastic	45-2917.3000.113	83
Maintained - Rest (a) - Momentary	45° left / 45° right	Black	Plastic	Plastic	45-2922.1000.113	81
	45° left / 45° right	Silver	Metal	Metal	45-2922.2000.113	81
	45° left / 45° right	Sand grey	Metal	Plastic	45-2922.3000.113	81
Maintained - Rest (a) - Maintained	45° left / 45° right	Black	Plastic	Plastic	45-2924.1000.113	83
	45° left / 45° right	Silver	Metal	Metal	45-2924.2000.113	83
	45° left / 45° right	Sand grey	Metal	Plastic	45-2924.3000.113	83

a = Key remove

Wiring diagrams

Wiring diagram 80

Wiring diagram 81

Wiring diagram 82

Wiring diagram 83

01
02
03
04
09
14
17
18
19
22
31
41
45
51
56
57
61
70
71
82
84
92
96

ID keylock switch, IP65

Product can differ from the current configuration.

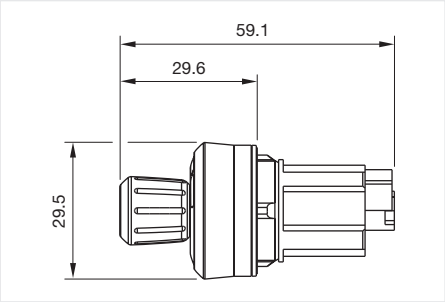

Dimensions [mm]

General information

- Mounting depth, incl. front plate, see chapter drawings

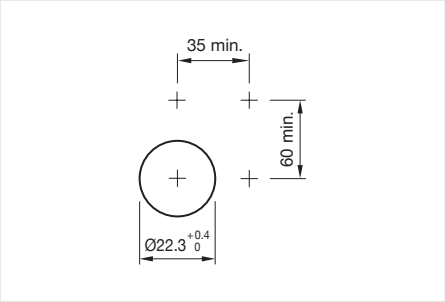

Mounting cut-outs [mm]

Equipment consisting of (schematic overview)

ID key — Page 528

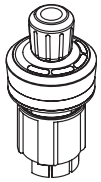

Actuator

Holder — Page 516

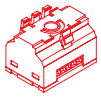

Electronic module — Page 527

Each Part Number listed below includes all the black components shown in the 3D-drawing.

To obtain a complete unit, please select the red components from the pages shown.

Actuator, Front dimension Ø 29,5 mm

Switching action	Front bezel colour	Front bezel material	Housing material	Part No.	Wiring diagram
Maintained - Maintained - Maintained - Maintained	Black	Plastic	Plastic	45-2S00.1001.404	213
	Sand grey	Metal	Plastic	45-2S00.3001.404	213

Wiring diagrams

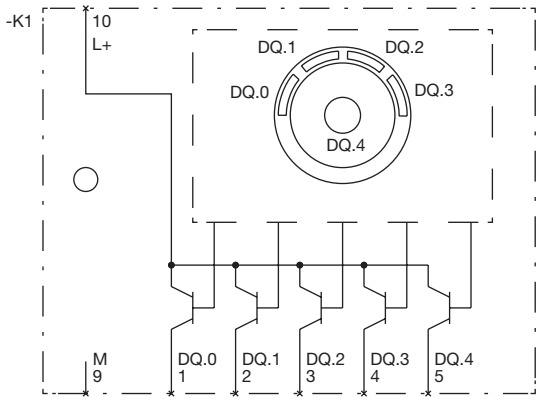

Wiring diagram 213

Toggle stick, IP65, IP67

Equipment consisting of (schematic overview)

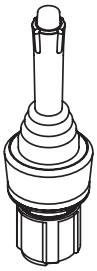

Actuator

Holder Page 517

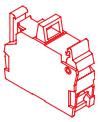

Switching element Page 518

Each Part Number listed below includes all the black components shown in the 3D-drawing.

To obtain a complete unit, please select the red components from the pages shown.

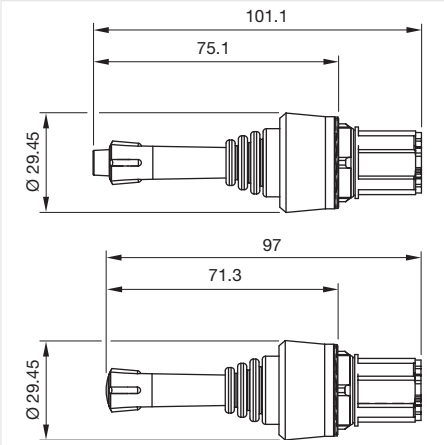

Dimensions [mm]

Product can differ from the current configuration.

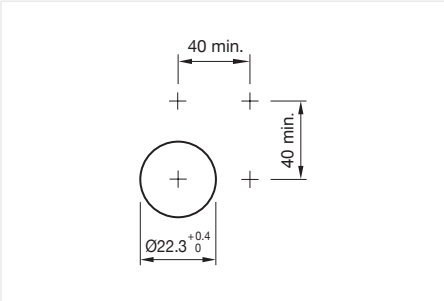

Mounting cut-outs [mm]

General information

- Use only with holder for 4 elements
- Mounting depth, incl. front plate, see chapter drawings
- Lockable only in center position

Actuator, Front dimension Ø 29,5 mm

Switching action	Product attributes	Housing material	Front bezel colour	Front bezel material	Part No.	Wiring diagram
Momentary	2 positions (L-R)	Plastic	Black	Plastic	45-2F0T.1010.000	223
	2 positions (L-R)	Metal	Silver	Metal	45-2F0T.2010.000	223
	2 positions (L-R)	Plastic	Sand grey	Metal	45-2F0T.3010.000	223
	4 positions	Plastic	Black	Plastic	45-2F0V.1010.000	225
	4 positions	Metal	Silver	Metal	45-2F0V.2010.000	225
	4 positions	Plastic	Sand grey	Metal	45-2F0V.3010.000	225
	2 positions (L-R), lockable	Plastic	Black	Plastic	45-2F13.1010.000	223
	2 positions (L-R), lockable	Metal	Silver	Metal	45-2F13.2010.000	223
	2 positions (L-R), lockable	Plastic	Sand grey	Metal	45-2F13.3010.000	223
	4 positions, lockable	Plastic	Black	Plastic	45-2F14.1010.000	225
	4 positions, lockable	Metal	Silver	Metal	45-2F14.2010.000	225
	4 positions, lockable	Plastic	Sand grey	Metal	45-2F14.3010.000	225
Maintained	2 positions (LR)	Plastic	Black	Plastic	45-2F20.1010.000	224
	2 positions (LR)	Metal	Silver	Metal	45-2F20.2010.000	224
	2 positions (LR)	Plastic	Sand grey	Metal	45-2F20.3010.000	224
	4 positions	Plastic	Black	Plastic	45-2F21.1010.000	226
	4 positions	Metal	Silver	Metal	45-2F21.2010.000	226
	4 positions	Plastic	Sand grey	Metal	45-2F21.3010.000	226
	2 positions (LR), lockable	Plastic	Black	Plastic	45-2F26.1010.000	224
	2 positions (LR), lockable	Metal	Silver	Metal	45-2F26.2010.000	224
	2 positions (LR), lockable	Plastic	Sand grey	Metal	45-2F26.3010.000	224
	4 positions, lockable	Plastic	Black	Plastic	45-2F27.1010.000	226
	4 positions, lockable	Metal	Silver	Metal	45-2F27.2010.000	226
	4 positions, lockable	Plastic	Sand grey	Metal	45-2F27.3010.000	226
Momentary	2 positions (U-D)	Plastic	Black	Plastic	45-2F38.1010.000	221

45 Raised design

Switching action	Product attributes	Housing material	Front bezel colour	Front bezel material	Part No.	Wiring diagram
Momentary	2 positions (U-D)	Metal	Silver	Metal	45-2F38.2010.000	221
	2 positions (U-D)	Plastic	Sand grey	Metal	45-2F38.3010.000	221
	2 positions (U-D), lockable	Plastic	Black	Plastic	45-2F40.1010.000	221
	2 positions (U-D), lockable	Metal	Silver	Metal	45-2F40.2010.000	221
	2 positions (U-D), lockable	Plastic	Sand grey	Metal	45-2F40.3010.000	221
Maintained	2 positions (UD)	Plastic	Black	Plastic	45-2F41.1010.000	222
	2 positions (UD)	Metal	Silver	Metal	45-2F41.2010.000	222
	2 positions (UD)	Plastic	Sand grey	Metal	45-2F41.3010.000	222
	2 positions (UD), lockable	Plastic	Black	Plastic	45-2F43.1010.000	222
	2 positions (UD), lockable	Metal	Silver	Metal	45-2F43.2010.000	222
	2 positions (UD), lockable	Plastic	Sand grey	Metal	45-2F43.3010.000	222

Wiring diagrams

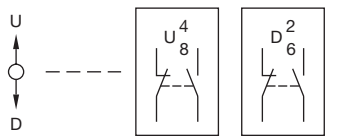

Wiring diagram 221

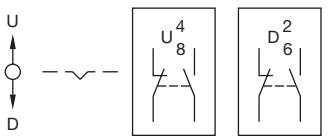

Wiring diagram 222

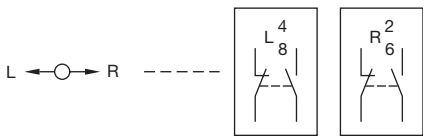

Wiring diagram 223

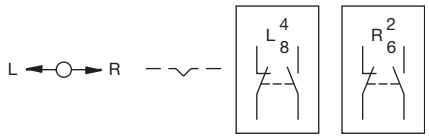

Wiring diagram 224

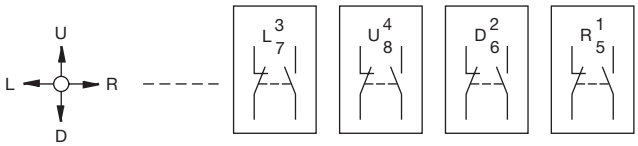

Wiring diagram 225

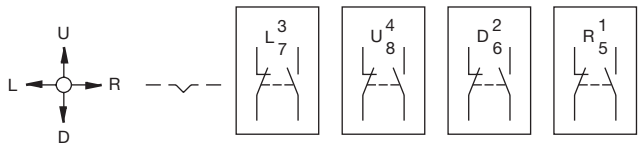

Wiring diagram 226

Toggle switch, IP66, IP67, IP69K

Equipment consisting of (schematic overview)

Actuator

Holder Page 516

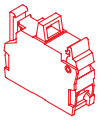

Switching element Page 518

Each Part Number listed below includes all the black components shown in the 3D-drawing.

To obtain a complete unit, please select the red components from the pages shown.

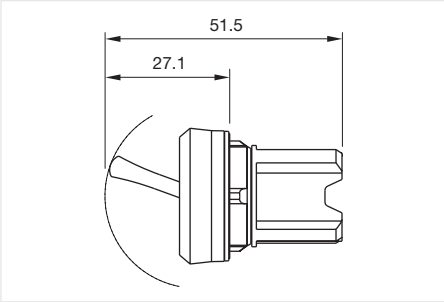

Dimensions [mm]

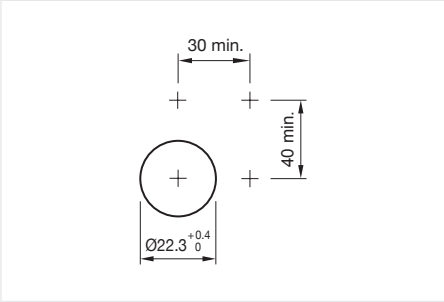

Mounting cut-outs [mm]

Product can differ from the current configuration.

General information

- Mounting depth, incl. front plate, see chapter drawings

Actuator, Front dimension Ø 29,5 mm

Switching action	Lever colour	Front bezel colour	Front bezel material	Housing material	Part No.	Wiring diagram
Momentary	Black	Black	Plastic	Plastic	45-2N39.1010.000	72
	Black	Silver	Metal	Metal	45-2N39.2010.000	72
	Black	Sand grey	Metal	Plastic	45-2N39.3010.000	72
Maintained	Black	Black	Plastic	Plastic	45-2N42.1010.000	73
	Black	Silver	Metal	Metal	45-2N42.2010.000	73
	Black	Sand grey	Metal	Plastic	45-2N42.3010.000	73

Wiring diagrams

Wiring diagram 72

Wiring diagram 73

Indicator full-face illumination, IP66, IP67, IP69K

Product can differ from the current configuration.

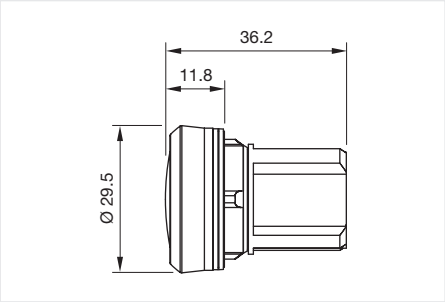

Dimensions [mm]

General information

- Mounting depth, incl. front plate, see chapter drawings

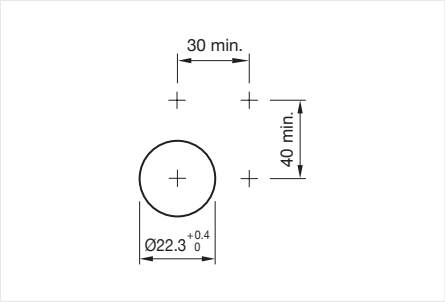

Mounting cut-outs [mm]

Equipment consisting of (schematic overview)

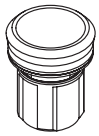

Actuator

Holder Page 516

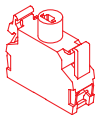

Illumination element Page 523

Each Part Number listed below includes all the black components shown in the 3D-drawing.

To obtain a complete unit, please select the red components from the pages shown.

Actuator, Front dimension Ø 30 mm

Lens cap colour	Housing material	Part No.	Wiring diagram
Red	Plastic	45-2T00.10E0.000	190
Amber	Plastic	45-2T00.10F0.000	190
Yellow	Plastic	45-2T00.10G0.000	190
Green	Plastic	45-2T00.10H0.000	190
Blue	Plastic	45-2T00.10J0.000	190
Colourless	Plastic	45-2T00.10K0.000	190
White	Plastic	45-2T00.10N0.000	190
Red	Metal	45-2T00.20E0.000	190
Amber	Metal	45-2T00.20F0.000	190
Yellow	Metal	45-2T00.20G0.000	190
Green	Metal	45-2T00.20H0.000	190
Blue	Metal	45-2T00.20J0.000	190
Colourless	Metal	45-2T00.20K0.000	190
White	Metal	45-2T00.20N0.000	190

Wiring diagrams

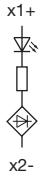

Wiring diagram 190

Indicator front illumination, IP66, IP67, IP69K

Equipment consisting of (schematic overview)

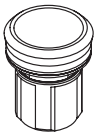

Actuator

Holder Page 516

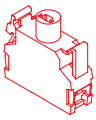

Illumination element Page 523

Each Part Number listed below includes all the black components shown in the 3D-drawing.

To obtain a complete unit, please select the red components from the pages shown.

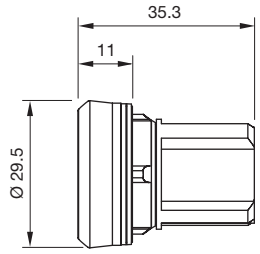

Dimensions [mm]

Product can differ from the current configuration.

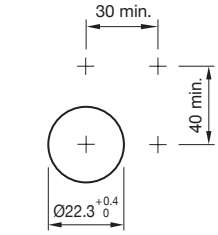

Mounting cut-outs [mm]

General information

- Mounting depth, incl. front plate, see chapter drawings

Actuator, Front dimension Ø 29,5 mm

Front bezel colour	Front bezel material	Lens cap colour	Housing material	Part No.	Wiring diagram
Black	Plastic	Red	Plastic	45-2T07.10E0.000	190
	Plastic	Yellow	Plastic	45-2T07.10G0.000	190
	Plastic	Green	Plastic	45-2T07.10H0.000	190
	Plastic	Blue	Plastic	45-2T07.10J0.000	190
	Plastic	White	Plastic	45-2T07.10K0.000	190
Sand grey	Metal	Red	Plastic	45-2T07.30E0.000	190
	Metal	Yellow	Plastic	45-2T07.30G0.000	190
	Metal	Green	Plastic	45-2T07.30H0.000	190
	Metal	Blue	Plastic	45-2T07.30J0.000	190
	Metal	White	Plastic	45-2T07.30K0.000	190

Wiring diagrams

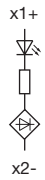

Wiring diagram 190

Indicator Bi-colour, IP66, IP67, IP69K

Product can differ from the current configuration.

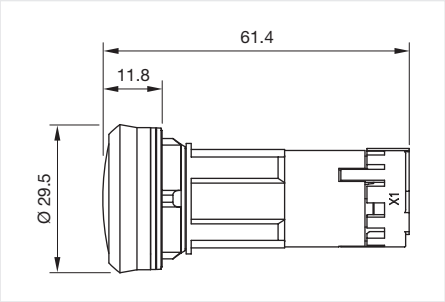

Dimensions [mm]

Equipment consisting of (schematic overview)

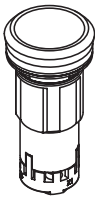

Actuator

Holder Page 516

Each Part Number listed below includes all the black components shown in the 3D-drawing.

To obtain a complete unit, please select the red components from the pages shown.

General information

- Mounting depth, incl. front plate, see chapter drawings

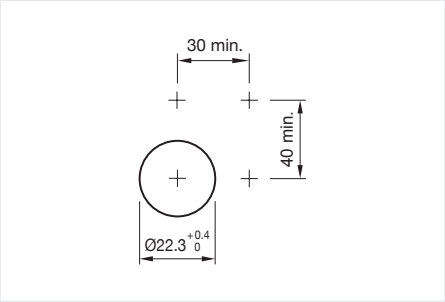

Mounting cut-outs [mm]

Actuator, Front dimension Ø 29,5 mm

Operating voltage	Illumination colour	Housing material	Part No.	Wiring diagram
6 - 24 V AC/DC	Red / Green	Plastic	45-2G08.10K1.000	203
110 V AC	Red / Green	Plastic	45-2G08.10K7.000	203
230 V AC	Red / Green	Plastic	45-2G08.10K8.000	203
6 - 24 V AC/DC	Red / Green	Metal	45-2G08.20K2.000	203
110 V AC	Red / Green	Metal	45-2G08.20K7.000	203
230 V AC	Red / Green	Metal	45-2G08.20K8.000	203

Wiring diagrams

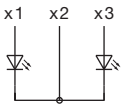

Wiring diagram 203

Buzzer, IP40

Equipment consisting of (schematic overview)

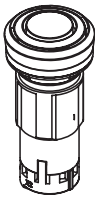

Actuator

Holder Page 516

Each Part Number listed below includes all the black components shown in the 3D-drawing.

To obtain a complete unit, please select the red components from the pages shown.

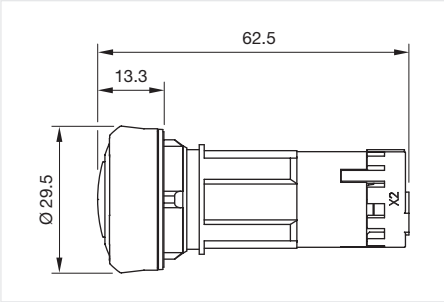

Dimensions [mm]

Product can differ from the current configuration.

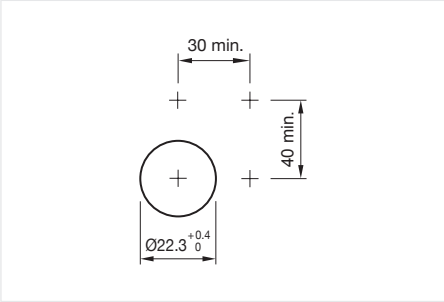

Mounting cut-outs [mm]

General information

- Mounting depth, incl. front plate, see chapter drawings

Actuator, Front dimension Ø 29,5 mm

Operating voltage	Housing material	Part No.	Wiring diagram
24 V AC/DC	Plastic	45-2H00.1016.000	199
110 V AC	Plastic	45-2H00.1017.000	199
230 V AC	Plastic	45-2H00.1018.000	199
24 V AC/DC	Metal	45-2H00.2016.000	199
110 V AC	Metal	45-2H00.2017.000	199
230 V AC	Metal	45-2H00.2018.000	199

Wiring diagrams

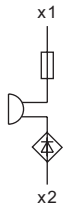

Wiring diagram 199

01
02
03
04
09
14
17
18
19
22
31
41
45
51
56
57
61
70
71
82
84
92
96

Potentiometer, IP66, IP67, IP69K

Product can differ from the current configuration.

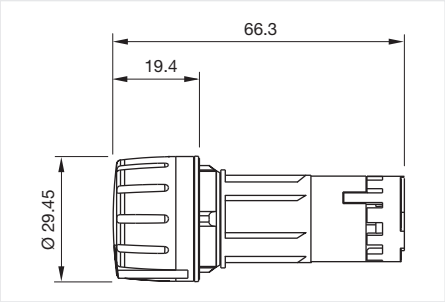

Dimensions [mm]

Equipment consisting of (schematic overview)

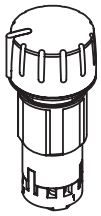

Actuator

Holder Page 516

Each Part Number listed below includes all the black components shown in the 3D-drawing.

To obtain a complete unit, please select the red components from the pages shown.

General information

- Power 0.5 W
- Mounting depth, incl. front plate, see chapter drawings

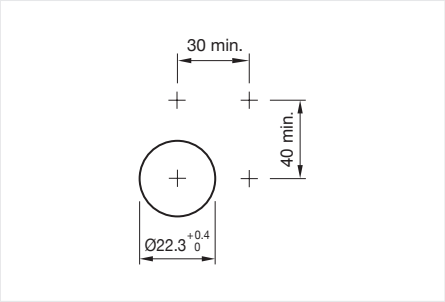

Mounting cut-outs [mm]

Actuator, Front dimension Ø 30 mm

Front bezel colour	Front bezel material	Housing material	Resistance	Resistance kind of	Part No.	Wiring diagram	Com-ponent Layout
Black	Plastic	Plastic	100 kOhm	linear, row_E3	45-2P01.1E10.000	104	22
	Plastic	Plastic	10 kOhm	linear, row_E3	45-2P02.1E10.000	104	22
	Plastic	Plastic	1 kOhm	linear, row_E3	45-2P03.1E10.000	104	22
	Plastic	Plastic	4.7 kOhm	linear, row_E3	45-2P04.1E10.000	104	22
	Plastic	Plastic	470 kOhm	linear, row_E3	45-2P05.1E10.000	104	22
	Plastic	Plastic	47 kOhm	linear, row_E3	45-2P06.1E10.000	104	22
Silver	Metal	Metal	100 kOhm	linear, row_E3	45-2P01.2E10.000	104	22
	Metal	Metal	10 kOhm	linear, row_E3	45-2P02.2E10.000	104	22
	Metal	Metal	1 kOhm	linear, row_E3	45-2P03.2E10.000	104	22
	Metal	Metal	4.7 kOhm	linear, row_E3	45-2P04.2E10.000	104	22
	Metal	Metal	470 kOhm	linear, row_E3	45-2P05.2E10.000	104	22
	Metal	Metal	47 kOhm	linear, row_E3	45-2P06.2E10.000	104	22

Wiring diagrams

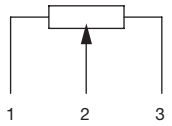

Wiring diagram 104

Component layouts

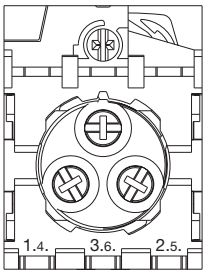

Component layout 22

User-friendly and robust.
EAO Series 45 Potentiometers.

Ideal for harsh industrial environments – thanks to IP69K protection and the long service life.

- IP69K protection
- Long service life
- Easy mounting
- Rotational range of 280°
- Resistance from 1 k to 470 kΩ

eao

www.eao.com/45

Your Expert Partner for **Human Machine Interfaces**

01
02
03
04
09
14
17
18
19
22
31
41
45
51
56
57
61
70
71
82
84
92
96

Stop switch, IP66, IP67, IP69K

Product can differ from the current configuration.

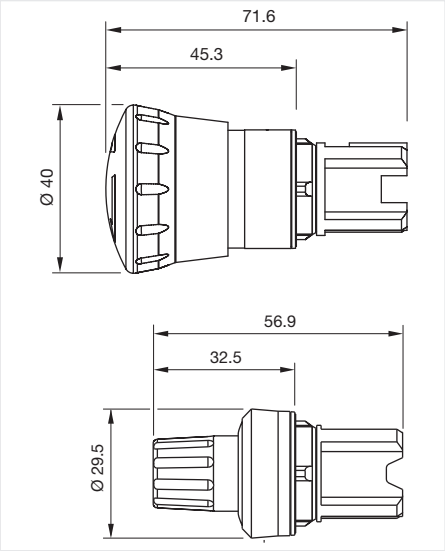

Dimensions [mm]

Equipment consisting of (schematic overview)

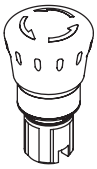

Actuator

Holder Page 516

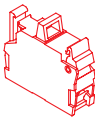

Switching element Page 518

Each Part Number listed below includes all the black components shown in the 3D-drawing.

To obtain a complete unit, please select the red components from the pages shown.

General information

- Mounting depth, incl. front plate, see chapter drawings

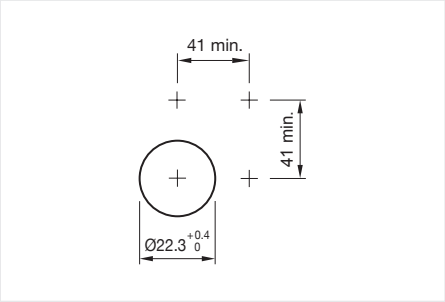

Mounting cut-outs [mm]

Actuator

Product attributes	Lens colour	Front bezel colour	Front bezel material	Dimensi-ons	Housing material	Part No.	Wiring diagram
Twist to unlock clockwise	Black	Black	Plastic	Ø 40 mm	Plastic	45-2736.1910.000	76
	Blue	Black	Plastic	Ø 40 mm	Plastic	45-2736.1960.000	76
	Black	Silver	Metal	Ø 40 mm	Metal	45-2C36.2910.000	76
Twist to release, can be latched after pressing by rotating to the right	Black	Black	Plastic	Ø 29 mm	Plastic	45-2729.1010.000	76
	Red	Black	Plastic	Ø 29 mm	Plastic	45-2729.1020.000	76

Wiring diagrams

Wiring diagram 76

Emergency stop switch foolproof, EN IEC 60947-5-5, IP66, IP67, IP69K

Equipment consisting of (schematic overview)

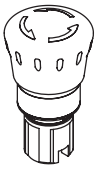

Actuator

Holder Page 516

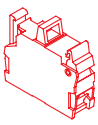

Switching element Page 518

Each Part Number listed below includes all the black components shown in the 3D-drawing.

To obtain a complete unit, please select the red components from the pages shown.

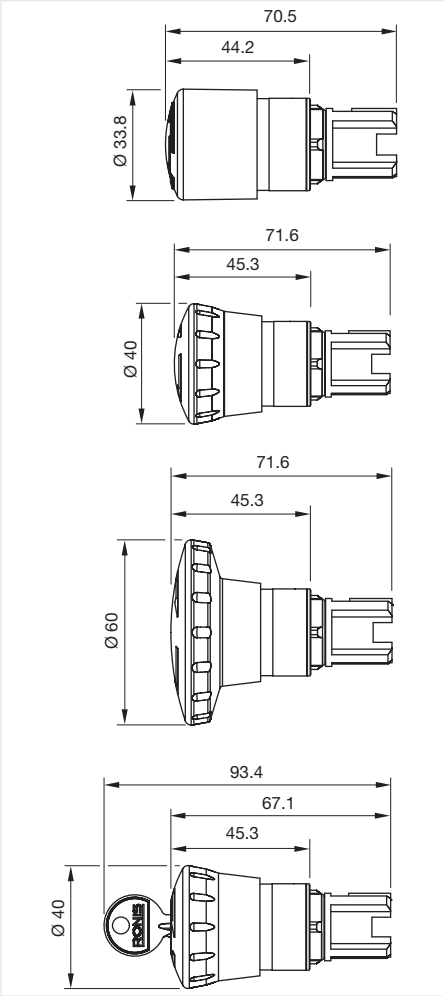

Dimensions [mm]

Product can differ from the current configuration.

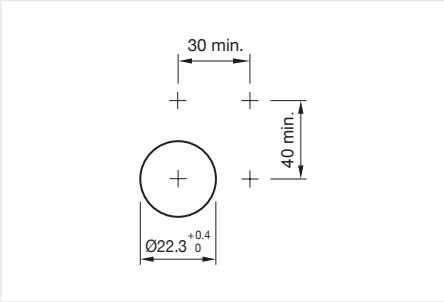

Mounting cut-outs [mm]

General information

- The standard lock: RONIS, T254
- Mounting depth, incl. front plate, see chapter drawings
- Application as per DIN EN ISO 13850

Actuator

Product attributes	Lens colour	Front bezel colour	Front bezel material	Dimensions	Housing colour	Housing material	Part No.	Wiring diagram
Key to releas	Red	Black	Plastic	Ø 40 mm	Yellow	Plastic	45-2C35.1920.110	364
	Red	Silver	Metal	Ø 40 mm	Yellow	Metal	45-2C35.2920.110	364
Pull release	Red	Black	Plastic	Ø 40 mm	Yellow	Plastic	45-2C37.1920.000	76
Twist to unlock clockwise	Red	Black	Plastic	Ø 34 mm	Yellow	Plastic	45-2C36.1820.000	76
	Red	Black	Plastic	Ø 40 mm	Yellow	Plastic	45-2C36.1920.000	76
	Red	Black	Plastic	Ø 60 mm	Yellow	Plastic	45-2C36.1A20.000	76
	Red	Silver	Metal	Ø 34 mm	Silver	Metal	45-2C36.2820.000	76

45 Raised design

Product attributes	Lens colour	Front bezel colour	Front bezel material	Dimensions	Housing colour	Housing material	Part No.	Wiring diagram
Twist to unlock clockwise	Red	Silver	Metal	Ø 40 mm	Silver	Metal	45-2C36.2920.000	76

Wiring diagrams

Wiring diagram 76

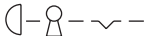

Wiring diagram 364

Innovative, intuitive and aesthetic.
EAO Series 45 ID keylock switches.

Ideal for implementing electronic access control systems in industrial environments.

- Intuitive and ease of use
- Authentication of up to 4 users or groups
- Robust in use
- Modular construction and quick mounting
- Aesthetic design, matching Series 45
- Innovative RFID technology

www.eao.com/45

eao

Your Expert Partner for Human Machine Interfaces

Illuminated emergency stop switch, foolprof, EN IEC 60947-5-5, IP66, IP67, IP69K

Equipment consisting of (schematic overview)

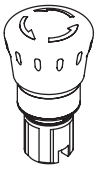

Actuator

Holder Page 516

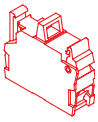

Switching element Page 518

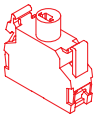

Illumination element Page 523

Each Part Number listed below includes all the black components shown in the 3D-drawing.

To obtain a complete unit, please select the red components from the pages shown.

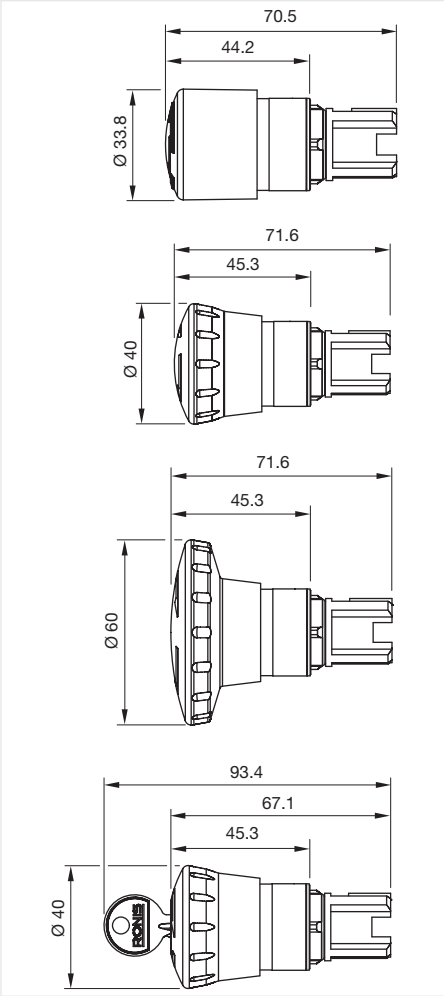

Dimensions [mm]

Product can differ from the current configuration.

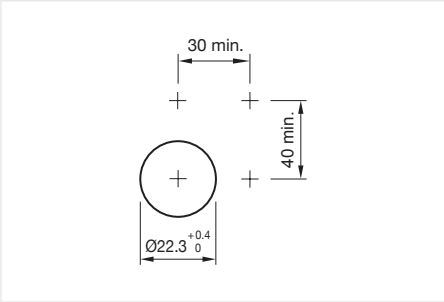

Mounting cut-outs [mm]

General information

- The standard lock: RONIS, T254
- Mounting depth, incl. front plate, see chapter drawings
- Application as per DIN EN ISO 13850

Actuator

Product attributes	Lens colour	Front bezel colour	Front bezel material	Dimensions	Housing colour	Housing material	Part No.	Wiring diagram
Twist to unlock clockwise	Red	Black	Plastic	Ø 34 mm	Yellow	Plastic	45-2D36.1820.000	205
	Red	Black	Plastic	Ø 40 mm	Yellow	Plastic	45-2D36.1920.000	205
	Red	Black	Plastic	Ø 60 mm	Yellow	Plastic	45-2D36.1A20.000	205
	Red	Silver	Metal	Ø 34 mm	Silver	Metal	45-2D36.2820.000	205
	Red	Silver	Metal	Ø 40 mm	Silver	Metal	45-2D36.2920.000	205
	Red	Silver	Metal	Ø 60 mm	Silver	Metal	45-2D36.2A20.000	205

01
02
03
04
09
14
17
18
19
22
31
41
45
51
56
57
61
70
71
82
84
92
96

Wiring diagrams

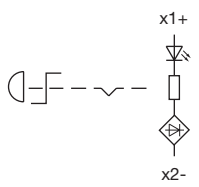

Wiring diagram 205

Rugged and reliable.
EAO Series 45 mushroom-head pushbuttons.

Reliable switching for harsh industrial environments – thanks to a large operating area and IP69K.

- Large, distinctive operating area
- Easy operation – even with gloves
- Many configuration options
- Optional illumination
- Long service life (up to 10 million switching cycles)
- Rugged in use (IP69K)

www.eao.com/45

eao

Your Expert Partner for **Human Machine Interfaces**

Lens plastic round encreased

Lens material	Lens colour	Lens optics	Lens shape	Lens illumination	Dimensions	Part No.
Plastic	Black	opaque	flush	non illuminative	Ø 23.7 mm	45-552.0100
	Red	opaque	flush	non illuminative	Ø 23.7 mm	45-552.0200
	Yellow	opaque	flush	non illuminative	Ø 23.7 mm	45-552.0400
	Green	opaque	flush	non illuminative	Ø 23.7 mm	45-552.0500
	Red	transparent	flush	illuminative	Ø 23.7 mm	45-552.0E00
	Yellow	transparent	flush	illuminative	Ø 23.7 mm	45-552.0G00
	Green	transparent	flush	illuminative	Ø 23.7 mm	45-552.0H00
	Blue	transparent	flush	illuminative	Ø 23.7 mm	45-552.0J00
	Colourless	transparent	flush	illuminative	Ø 23.7 mm	45-552.0K00

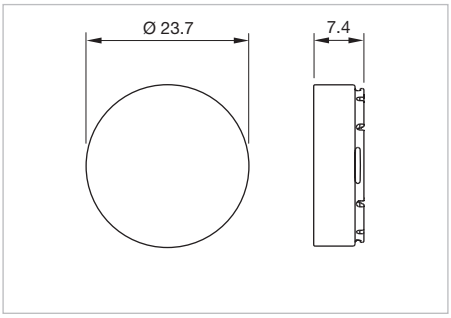

Dimensions [mm]

Lens plastic round flat

Lens material	Lens colour	Lens optics	Lens shape	Lens illumination	Dimensions	Part No.
Plastic	Black	opaque	flush	non illuminative	Ø 23.7 mm	45-553.0100
	Red	opaque	flush	non illuminative	Ø 23.7 mm	45-553.0200
	Yellow	opaque	flush	non illuminative	Ø 23.7 mm	45-553.0400
	Green	opaque	flush	non illuminative	Ø 23.7 mm	45-553.0500
	Blue	opaque	flush	non illuminative	Ø 23.7 mm	45-553.0600
	White	opaque	flush	non illuminative	Ø 23.7 mm	45-553.0900
	Red	transparent	flush	illuminative	Ø 23.7 mm	45-553.0E00
	Amber	transparent	flush	illuminative	Ø 23.7 mm	45-553.0F00
	Yellow	transparent	flush	illuminative	Ø 23.7 mm	45-553.0G00
	Green	transparent	flush	illuminative	Ø 23.7 mm	45-553.0H00
	Blue	transparent	flush	illuminative	Ø 23.7 mm	45-553.0J00
	White	transparent	flush	illuminative	Ø 23.7 mm	45-553.0K00
	Colourless	transparent	flush	illuminative	Ø 23.7 mm	45-553.0N00

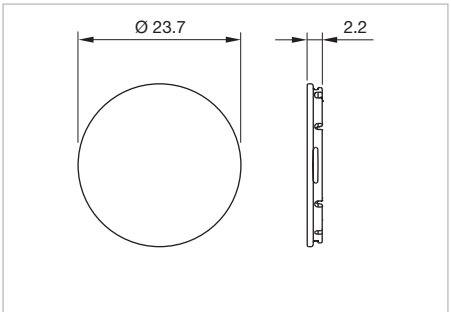

Dimensions [mm]

01
02
03
04
09
14
17
18
19
22
31
41
45
51
56
57
61
70
71
82
84
92
96

Single frame

Product attributes	Material	Colour	Dimensions	Part No.
For design square	plastic	Black	29,8 mm x 29,8 mm	45-558.0000

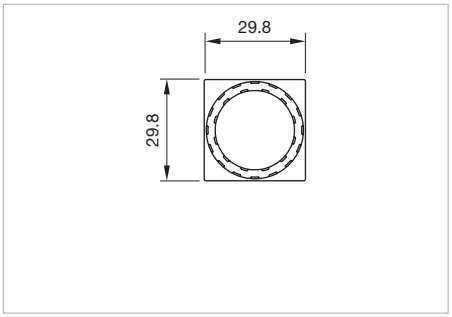

Dimensions [mm]

Holder for 3 elements

Material	Part No.	Com-ponent Layout
plastic	45-2300.1000.000	23
metal	45-2300.2000.000	23

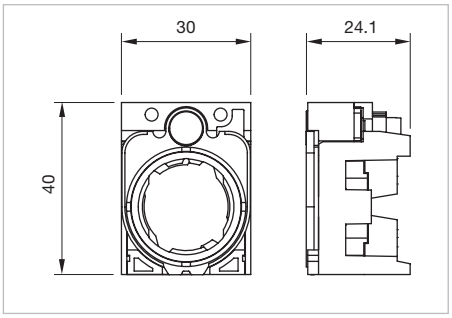

Dimensions [mm]

Component layouts

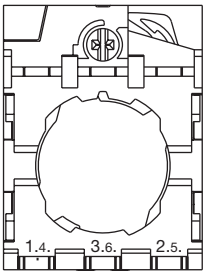

Component layout 23

Holder for 4 elements

Product attributes	Material	Part No.	Component Layout
for selector switch 4 positions and toggle stick	plastic	45-2400.1000.000	24
	metal	45-2400.2000.000	24

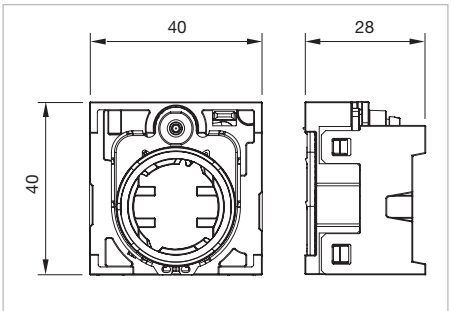

Dimensions [mm]

Component layouts

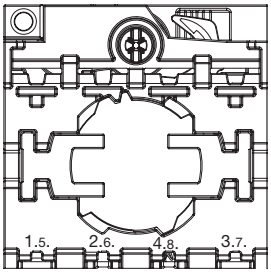

Component layout 24

01
02
03
04
09
14
17
18
19
22
31
41
45
51
56
57
61
70
71
82
84
92
96

Slow-make switching switching element front mounting with screw terminal

Switching current	Contacts	Contact material	Part No.	Wiring diagram
10 A	1 NO	Silver	45-311.1Z10	227
	1 NC	Silver	45-312.1Z10	228
	2 NO	Silver	45-313.1Z10	231
	2 NC	Silver	45-314.1Z10	234
	1 NC / 1 NO	Silver	45-315.1Z10	235
	1 NO	Gold-plated silver	45-311.1X10	227
	1 NC	Gold-plated silver	45-312.1X10	228
	1 NC / 1 FS	Gold-plated silver	45-316.1X10	233

Contacts: NC = Normally closed, NO = Normally open

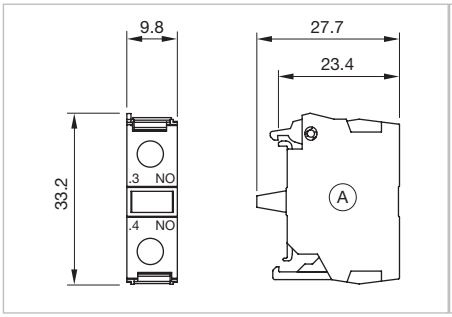

Dimensions [mm]
A = Screw terminal
for Part No. 45-311.1Z10, 45-311.1X10

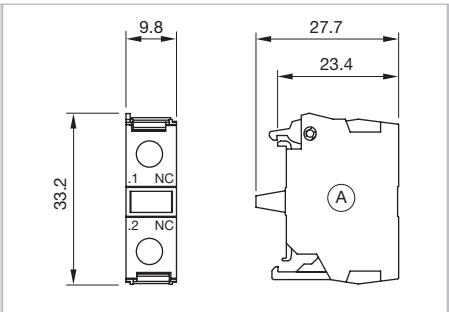

Dimensions [mm]
A = Screw terminal
for Part No. 45-312.1Z10, 45-312.1X10

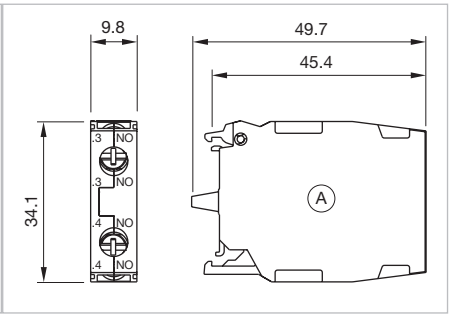

Dimensions [mm]
A = Screw terminal
for Part No. 45-313.1Z10

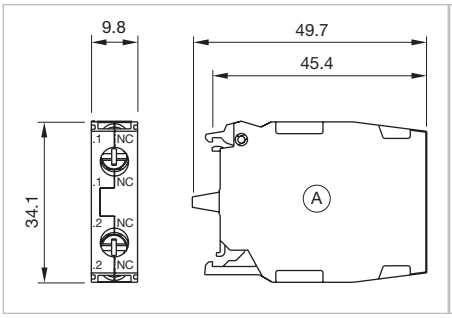

Dimensions [mm]
A = Screw terminal
for Part No. 45-314.1Z10

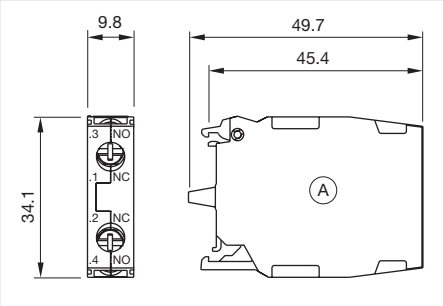

Dimensions [mm]
A = Screw terminal
for Part No. 45-315.1Z10

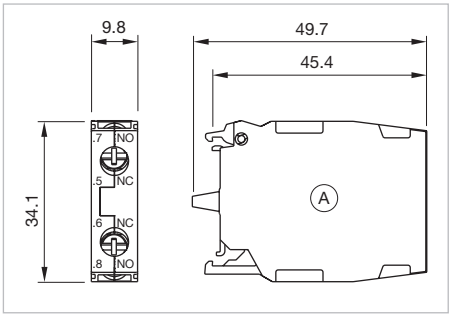

Dimensions [mm]
A = Screw terminal
for Part No. 45-316.1X10

Wiring diagrams

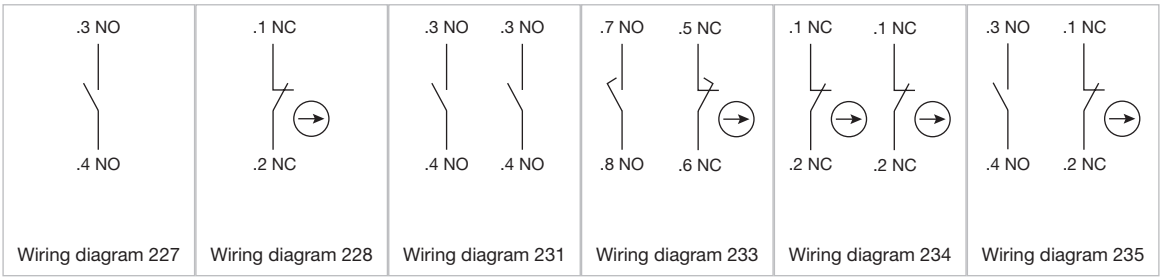

Wiring diagram 227	Wiring diagram 228	Wiring diagram 231	Wiring diagram 233	Wiring diagram 234	Wiring diagram 235

Innovative and comprehensive.
EAO's new Series 45.

Modular, aesthetic and robust for every conceivable HMI function of machine operating.

- Comprehensive and modular Series
- Rugged in use (up to IP69K)
- Easy to assemble and use
- Modern design with many options
- Value added services
- Long service life (up to 10 milion switching cycles, depending on function)

eao

www.eao.com

Your Expert Partner for **Human Machine Interfaces**

01
02
03
04
09
14
17
18
19
22
31
41
45
51
56
57
61
70
71
82
84
92
96

Slow-make switching switching element front mounting with spring-type terminal

Switching current	Contacts	Contact material	Part No.	Wiring diagram
10 A	1 NO	Silver	45-311.1Z40	227
	1 NC	Silver	45-312.1Z40	228
	2 NO	Silver	45-313.1Z40	231
	2 NC	Silver	45-314.1Z40	234
	1 NC / 1 NO	Silver	45-315.1Z40	235
	1 NC / 1 FS	Silver	45-316.1Z40	233
	1 NC	Silver	45-317.1Z40	232
	1 NO	Gold-plated silver	45-311.1X40	227
	1 NC	Gold-plated silver	45-312.1X40	228
	2 NO	Gold-plated silver	45-313.1X40	231
	2 NC	Gold-plated silver	45-314.1X40	234
	1 NC / 1 NO	Gold-plated silver	45-315.1X40	235
	1 NC / 1 FS	Gold-plated silver	45-316.1X40	233

Contacts: NC = Normally closed, NO = Normally open

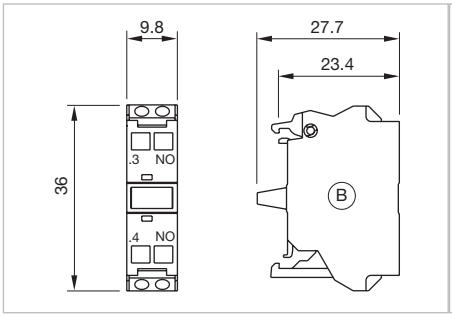

Dimensions [mm]
B = Spring-type terminal
for Part No. 45-311.1Z40, 45-311.1X40

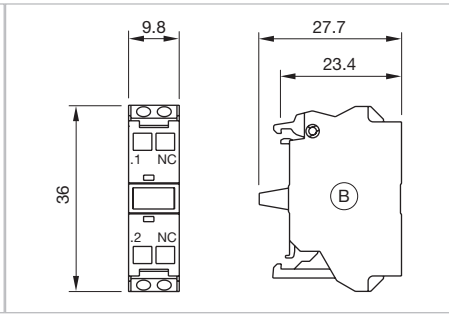

Dimensions [mm]
B = Spring-type terminal
for Part No. 45-312.1Z40, 45-312.1X40

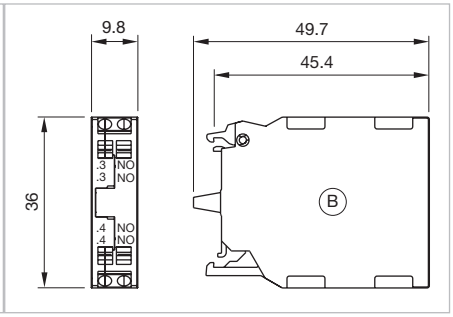

Dimensions [mm]
B = Spring-type terminal
for Part No. 45-313.1Z40, 45-313.1X40

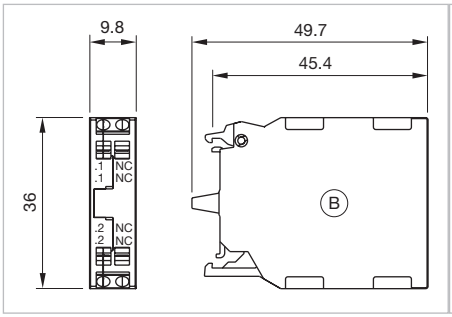

Dimensions [mm]
B = Spring-type terminal
for Part No. 45-314.1Z40, 45-314.1X40

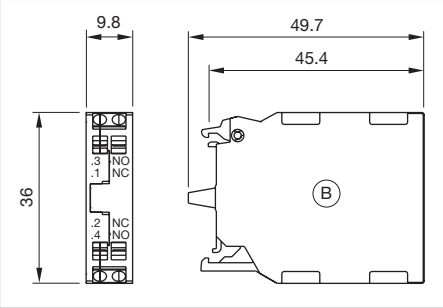

Dimensions [mm]
B = Spring-type terminal
for Part No. 45-315.1Z40, 45-315.1X40

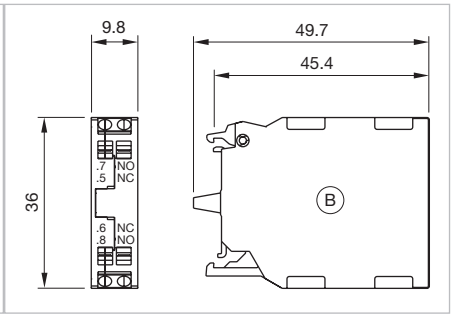

Dimensions [mm]
B = Spring-type terminal
for Part No. 45-316.1Z40, 45-316.1X40

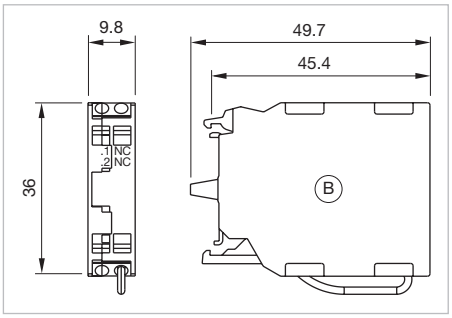

Dimensions [mm]
B = Spring-type terminal
for Part No. 45-317.1Z40

Wiring diagrams

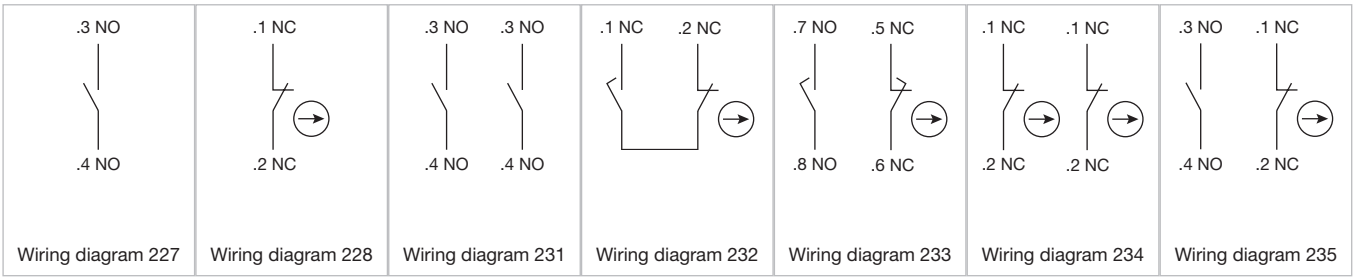

Slow-make switching switching element base mounting with screw terminal

Switching current	Contacts	Contact material	Part No.	Wiring diagram
10 A	1 NO	Silver	45-311.2Z10	227
	1 NC	Silver	45-312.2Z10	228

Contacts: NC = Normally closed, NO = Normally open

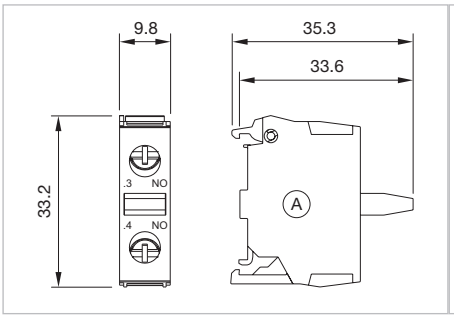

Dimensions [mm]
A = Screw terminal
for Part No. 45-311.2Z10

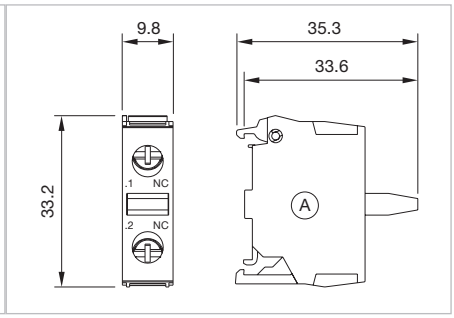

Dimensions [mm]
A = Screw terminal
for Part No. 45-312.2Z10

Wiring diagrams

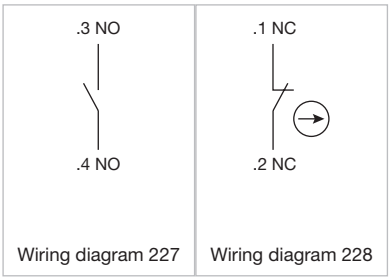

01
02
03
04
09
14
17
18
19
22
31
41
45
51
56
57
61
70
71
82
84
92
96

Slow-make switching switching element base mounting with spring-type terminal

Switching current	Contacts	Contact material	Part No.	Wiring diagram
10 A	1 NO	Silver	45-311.2Z40	227
	1 NC	Silver	45-312.2Z40	228

Contacts: NC = Normally closed, NO = Normally open

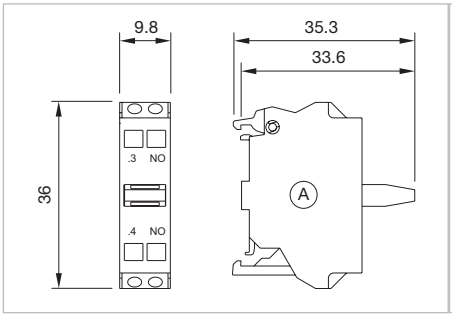

Dimensions [mm]
B = Spring-type terminal
for Part No. 45-311.2Z40

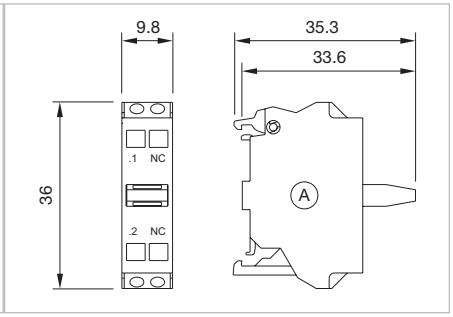

Dimensions [mm]
B = Spring-type terminal
for Part No. 45-312.2Z40

Wiring diagrams

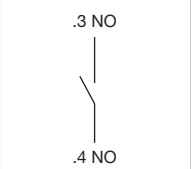

Wiring diagram 227

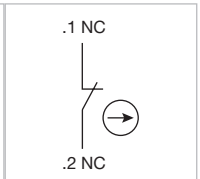

Wiring diagram 228

Illumination element front mounting with spring-type terminal

Operating voltage	Illuminative colour	Part No.	Wiring diagram
6 - 24 V AC/DC	Red	45-320.1E41	229
	Amber	45-320.1F41	229
	Yellow	45-320.1G41	229
	Green	45-320.1H41	229
	Blue	45-320.1J41	229
	White	45-320.1N41	229
24 - 240 V AC/DC	Red	45-320.1E42	229
	Amber	45-320.1F42	229
	Yellow	45-320.1G42	229
	Green	45-320.1H42	229
	Blue	45-320.1J42	229
	White	45-320.1N42	229
24 V AC/DC	Red	45-320.1E46	229
	Amber	45-320.1F46	229
	Yellow	45-320.1G46	229
	Green	45-320.1H46	229
	Blue	45-320.1J46	229
	White	45-320.1N46	229
110 V AC/DC	Red	45-320.1E47	229
	Amber	45-320.1F47	229
	Yellow	45-320.1G47	229
	Green	45-320.1H47	229
	Blue	45-320.1J47	229
	White	45-320.1N47	229
230 V AC/DC	Red	45-320.1E48	229
	Amber	45-320.1F48	229
	Yellow	45-320.1G48	229
	Green	45-320.1H48	229
	Blue	45-320.1J48	229
	White	45-320.1N48	229

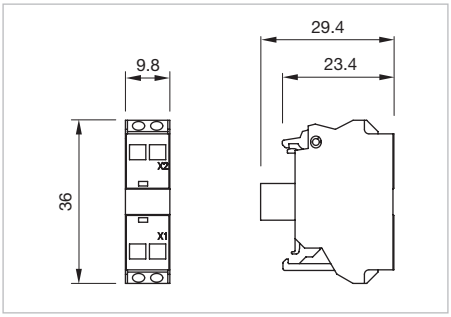

Dimensions [mm]

Wiring diagrams

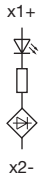

Wiring diagram 229

Illumination element base mounting with screw terminal

Operating voltage	Illuminative colour	Part No.	Wiring diagram
6 - 24 V AC/DC	Red	45-320.2E11	229
	Amber	45-320.2F11	229
	Yellow	45-320.2G11	229
	Green	45-320.2H11	229
	Blue	45-320.2J11	229
	White	45-320.2N11	229
24 - 240 V AC/DC	Red	45-320.2E12	229
	Amber	45-320.2F12	229
	Yellow	45-320.2G12	229
	Green	45-320.2H12	229
	Blue	45-320.2J12	229
	White	45-320.2N12	229
24 V AC/DC	Red	45-320.2E16	229
	Amber	45-320.2F16	229
	Yellow	45-320.2G16	229
	Green	45-320.2H16	229
	Blue	45-320.2J16	229
	White	45-320.2N16	229
110 V AC/DC	Red	45-320.2E17	229
	Amber	45-320.2F17	229
	Yellow	45-320.2G17	229
	Green	45-320.2H17	229
	Blue	45-320.2J17	229
	White	45-320.2N17	229
230 V AC/DC	Red	45-320.2E18	229
	Amber	45-320.2F18	229
	Yellow	45-320.2G18	229
	Green	45-320.2H18	229
	Blue	45-320.2J18	229
	White	45-320.2N18	229

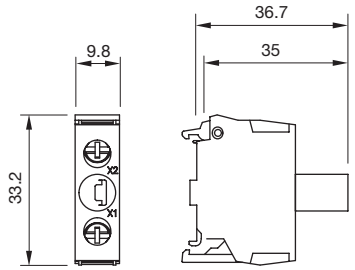

Dimensions [mm]

Wiring diagrams

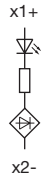

Wiring diagram 229

Illumination element base mounting with spring-type terminal

Operating voltage	Illuminative colour	Part No.	Wiring diagram
6 - 24 V AC/DC	Red	45-320.2E41	229
	Amber	45-320.2F41	229
	Yellow	45-320.2G41	229
	Green	45-320.2H41	229
	Blue	45-320.2J41	229
	White	45-320.2N41	229
24 - 240 V AC/DC	Red	45-320.2E42	229
	Amber	45-320.2F42	229
	Yellow	45-320.2G42	229
	Green	45-320.2H42	229
	Blue	45-320.2J42	229
	White	45-320.2N42	229
24 V AC/DC	Red	45-320.2E46	229
	Amber	45-320.2F46	229
	Yellow	45-320.2G46	229
	Green	45-320.2H46	229
	Blue	45-320.2J46	229
	White	45-320.2N46	229
110 V AC/DC	Red	45-320.2E47	229
	Amber	45-320.2F47	229
	Yellow	45-320.2G47	229
	Green	45-320.2H47	229
	Blue	45-320.2J47	229
	White	45-320.2N47	229
230 V AC/DC	Red	45-320.2E48	229
	Amber	45-320.2F48	229
	Yellow	45-320.2G48	229
	Green	45-320.2H48	229
	Blue	45-320.2J48	229
	White	45-320.2N48	229

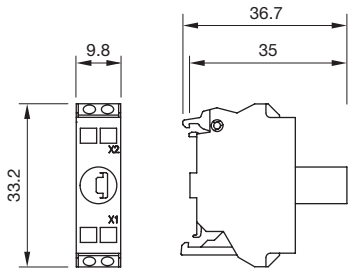

Dimensions [mm]

Wiring diagrams

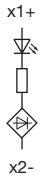

Wiring diagram 229

Illumination element PCB mounting

Operating voltage	Illuminative colour	Part No.	Wiring diagram
5 V AC/DC	Red	45-320.3E60	229
	Amber	45-320.3F60	229
	Yellow	45-320.3G60	229
	Green	45-320.3H60	229
	Blue	45-320.3J60	229
	White	45-320.3N60	229

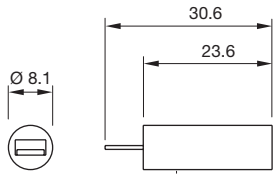

Dimensions [mm]

Wiring diagrams

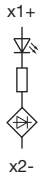

Wiring diagram 229

Electronic module

Product attributes	Operating voltage	Terminal	Part No.	Wiring diagram	Com-ponent Layout
Front mounting	24 V DC	Screw terminal	45-36F.1114	213	26

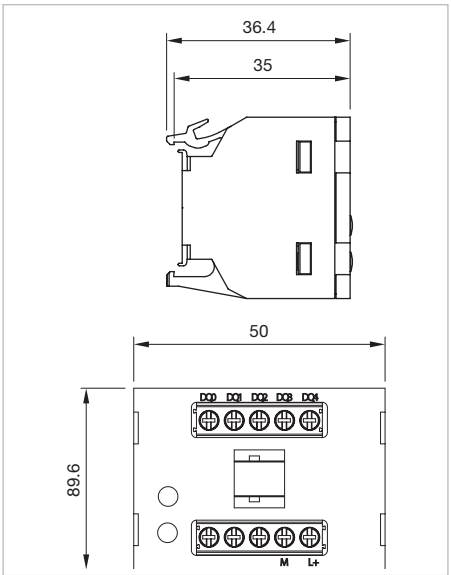

Dimensions [mm]

Wiring diagrams

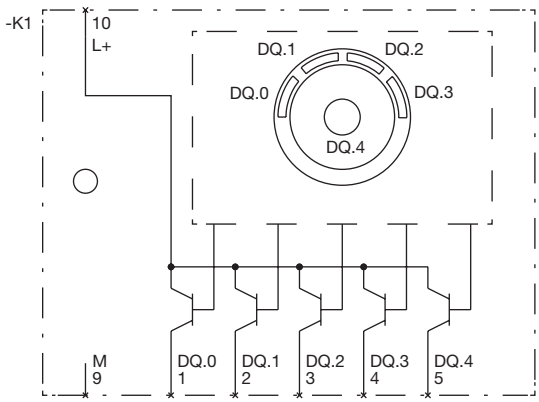

Wiring diagram 213

Component layouts

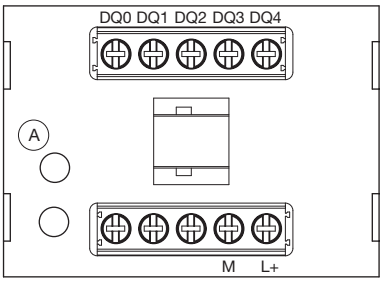

Component layout 26

A = Device

ID-Key

Product attributes	Colour	Part No.
Design of the RFID coding: Step 1	Green	45-50T.0500
Design of the RFID coding: Step 1+2	Yellow	45-50V.0400
Design of the RFID coding: Step 1+2+3	Red	45-50W.0200
Design of the RFID coding: Step 1+2+3+4	Blue	45-574.0600

Front side

Cover for locking device

Product attributes	Material	Colour	Optics	IP Protection	Part No.
For pushbuttons, selector switches with round or short lever	metal / plastic	Colourless	transparent	IP66, IP67, IP69K	45-529.2100

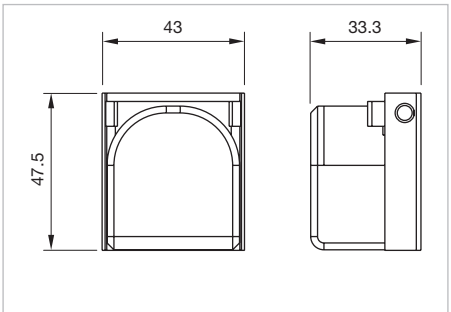

Dimensions [mm]

Come take a look at our LinkedIn profile today! *Be sure to give us a follow so that you can fully interact with us.*

https://www.linkedin.com/company/eao/

www.eao.com

eao

Your Expert Partner for **Human Machine Interfaces**

01
02
03
04
09
14
17
18
19
22
31
41
45
51
56
57
61
70
71
82
84
92
96

Locking device

Product attributes	Dimensions	Material	Colour	Part No.
For pushbutton with lens raised	47 mm x 25.1 mm x 43.1 mm	metal	Silver	45-531.2100
For pushbutton with lens flat	47 mm x 25.1 mm x 43.1 mm	metal	Silver	45-532.2100
For mushroom-head pushbutton Ø 30 mm or Ø 40 mm	47 mm x 25.1 mm x 43.1 mm	metal	Silver	45-530.2100
For selector switch in position left	47 mm x 21.1 mm x 47.1 mm	metal	Silver	45-534.2100
For selector switch in position center	47 mm x 21.1 mm x 47.1 mm	metal	Silver	45-533.2100
For selector switch in position right	47 mm x 21.1 mm x 47.1 mm	metal	Silver	45-536.2100
For selector switch in position center and right	47 mm x 21.1 mm x 47.1 mm	metal	Silver	45-535.2100
For selector switch in position center and left	47 mm x 21.1 mm x 47.1 mm	metal	Silver	45-537.2100

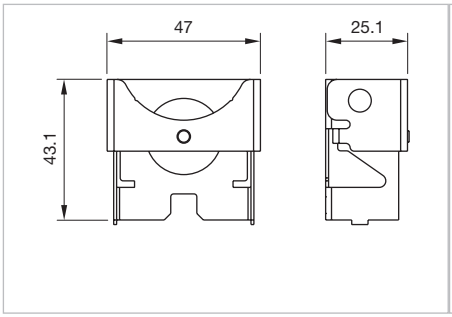

Dimensions [mm]
for Part No. 45-531.2100

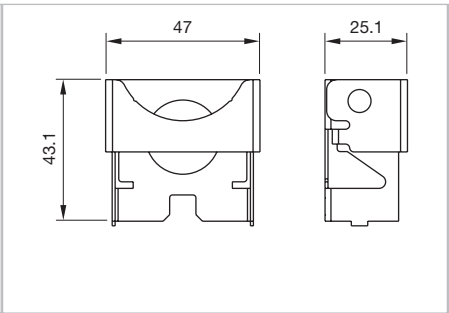

Dimensions [mm]
for Part No. 45-532.2100, 45-530.2100

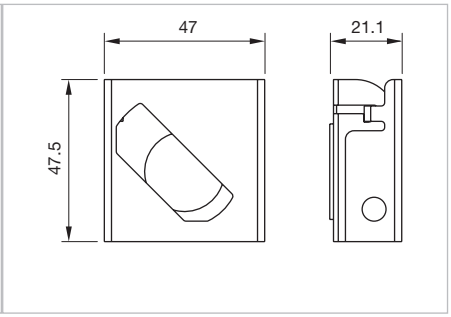

Dimensions [mm]
for Part No. 45-534.2100

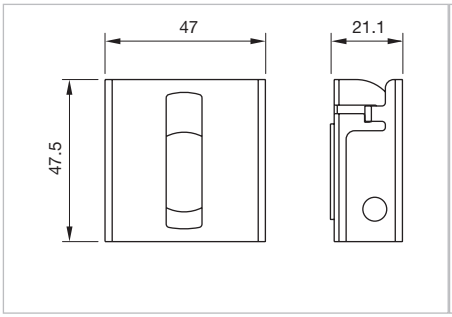

Dimensions [mm]
for Part No. 45-533.2100

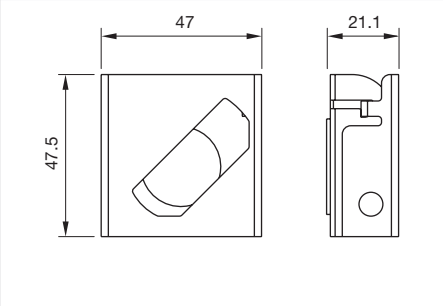

Dimensions [mm]
for Part No. 45-536.2100

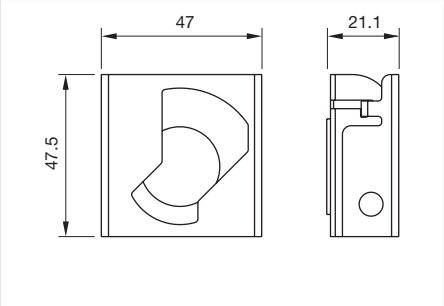

Dimensions [mm]
for Part No. 45-535.2100

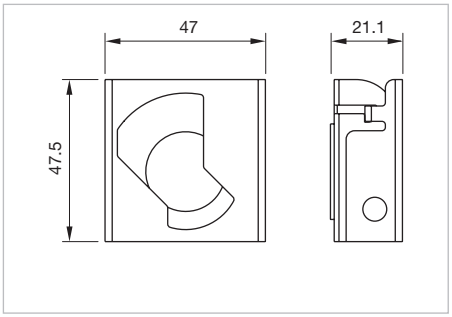

Dimensions [mm]
for Part No. 45-537.2100

Legend plate

Product attributes	Dimensions	Material	Colour	Mounting type	Part No.
Not to use with emergency stop switch	27 mm x 12.5 mm	plastic	Black	adhesive	45-573.1102
	27 mm x 12.5 mm	plastic	Red	adhesive	45-573.1202
	27 mm x 12.5 mm	plastic	Silver	adhesive	45-573.1A02
	27 mm x 17.5 mm	plastic	Black	adhesive	45-573.1103
	27 mm x 17.5 mm	plastic	Silver	adhesive	45-573.1A03
	27 mm x 27 mm	plastic	Black	adhesive	45-573.1105
	27 mm x 27 mm	plastic	Silver	adhesive	45-573.1A05
	22 mm x 22 mm	plastic	Silver	adhesive	45-573.1A04
	22 mm x 22 mm	plastic	Black	adhesive	45-573.1104

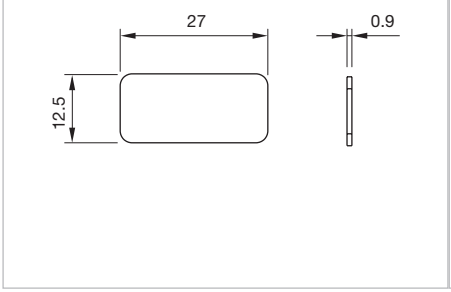

Dimensions [mm]
for Part No. 45-573.1102, 45-573.1202, 45-573.1A02

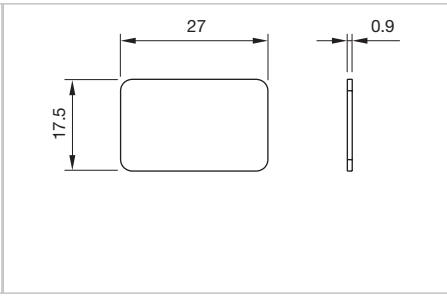

Dimensions [mm]
for Part No. 45-573.1103, 45-573.1A03

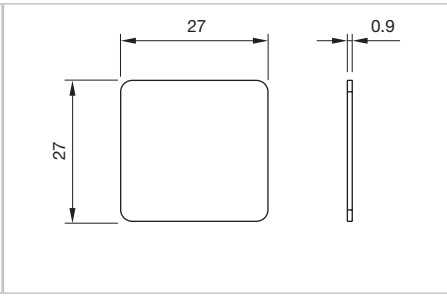

Dimensions [mm]
for Part No. 45-573.1105, 45-573.1A05

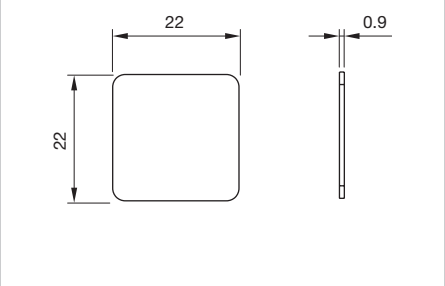

Dimensions [mm]
for Part No. 45-573.1A04, 45-573.1104

Emergency stop legend

Dimensions	Material	Colour	Mounting type	Marking	Part No.
Ø 45 mm	plastic	Yellow		without marking	45-50K.1407
Ø 75 mm	plastic	Yellow		without marking	45-50K.1408
	plastic	Yellow	adhesive	without marking	45-50J.1400
	plastic	Yellow	adhesive	NOT - HALT	45-50J.140Q
	plastic	Yellow	adhesive	EMERGENCY STOP	45-50J.140S
	plastic	Yellow	adhesive	NOT - AUS	45-50J.140P
	plastic	Yellow	adhesive	ARRET D'URGENCE	45-50J.140T
	plastic	Yellow	adhesive	EMERGENZA	45-50J.140V
	plastic	Yellow	adhesive	NODSTOP	45-50J.140W
	plastic	Yellow	adhesive	紧急停止	45-50J.140X
	plastic	Yellow	adhesive	NOT-HALT EMERGENCY STOP EMERGENZA EMERGENCIA	45-50J.140Z
150 mm x 38 mm	plastic	Yellow	adhesive	without marking	45-561.1400
	plastic	Yellow	adhesive	NOT - AUS	45-561.140P
	plastic	Yellow	adhesive	without marking, with recess	45-562.1400

Additional information

- Front panel thickness 3 mm max.

01
02
03
04
09
14
17
18
19
22
31
41
45
51
56
57
61
70
71
82
84
92
96

Legend plate for potentiometer

Dimensions	Material	Colour	Part No.
Ø 40 mm	plastic	Black	45-538.1100

Blind plug

Material	Colour	Part No.
plastic	Black	45-506.1100
metal	Sand grey	45-506.3A00
	Silver	45-506.2A00

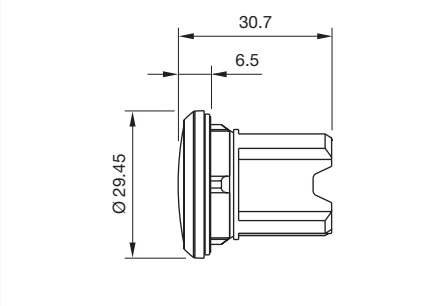

Dimensions [mm]

Spare key

Product attributes	Part No.
2 spare keys	45-522.0900

Additional information

- For standard lock RONIS T254

Protective cap

Product attributes	Material	Colour	Optics	Part No.
For lens raised above bezel	silicone	Colourless	transparent	45-544.1K00
For lens flush	silicone	Colourless	transparent	45-545.1K00
For lens raised above bezel	silicone	Colourless	transparent	45-547.1K00
For lens flush	silicone	Colourless	transparent	45-548.1K00
For lens raised above bezel	silicone	Colourless	transparent	45-542.1K00
For Mushroom-head pushbutton Ø 40 mm	silicone	Colourless	transparent	45-543.1K00
For lever switch, short lever	silicone	Colourless	transparent	45-546.1K00
For keylock switch	silicone	Colourless	transparent	45-50F.1100

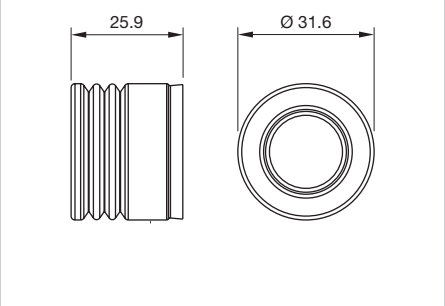

Dimensions [mm]
for Part No. 45-544.1K00

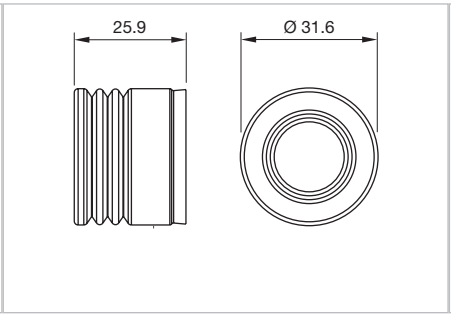

Dimensions [mm]
for Part No. 45-545.1K00

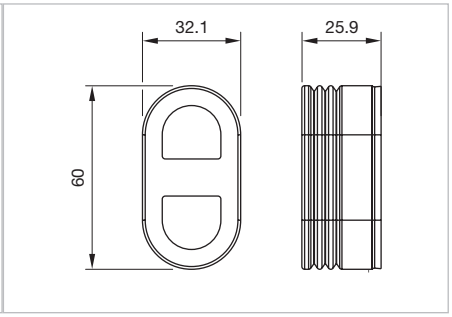

Dimensions [mm]
for Part No. 45-547.1K00, 45-548.1K00

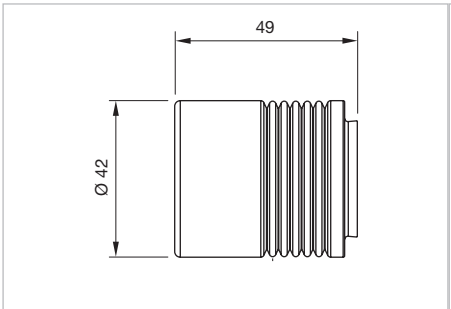

Dimensions [mm]
for Part No. 45-542.1K00

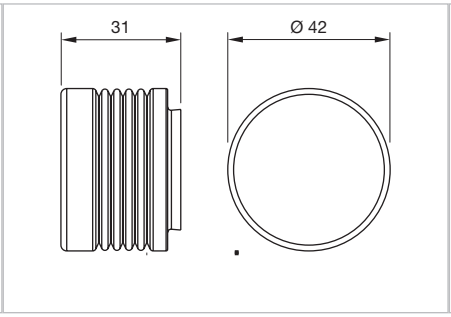

Dimensions [mm]
for Part No. 45-543.1K00

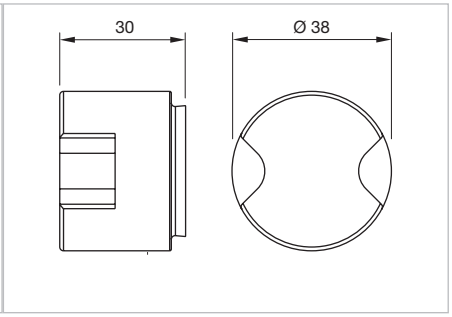

Dimensions [mm]
for Part No. 45-546.1K00

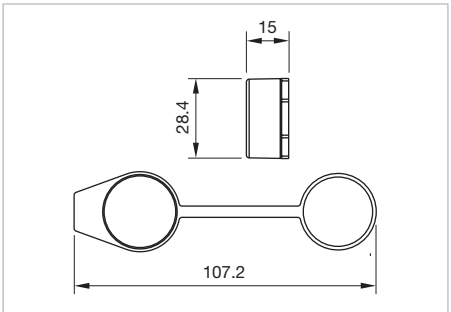

Dimensions [mm]
for Part No. 45-50F.1100

Legend support without legend

Product attributes	Material	Colour	Mounting type	Part No.
For legend 27 mm x 12.5 mm	plastic	Black	For sticking or snapping in place	45-564.1102
	plastic	Black	For sticking or snapping in place	45-567.1103
For legend 27 mm x 27 mm	plastic	Black	For sticking or snapping in place	45-569.1105
	plastic	Black	For sticking or snapping in place	45-570.1105
For legend 27 mm x 12.5 mm	plastic	Black	For sticking or snapping in place	45-564.1110
For legend 27 mm x 17.5 mm	plastic	Black	For sticking or snapping in place	45-567.1111
For legend 27 mm x 27 mm	plastic	Black	For sticking or snapping in place	45-569.1112

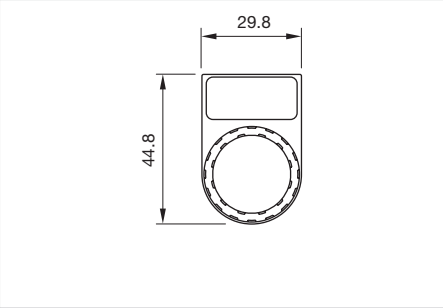

Dimensions [mm]
for Part No. 45-564.1102

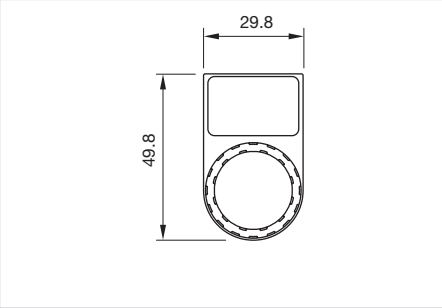

Dimensions [mm]
for Part No. 45-567.1103

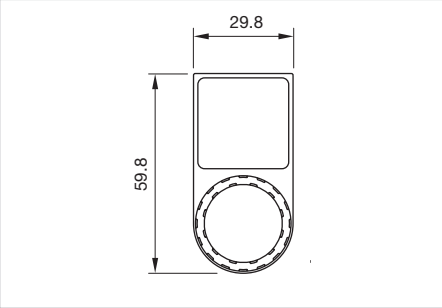

Dimensions [mm]
for Part No. 45-569.1105

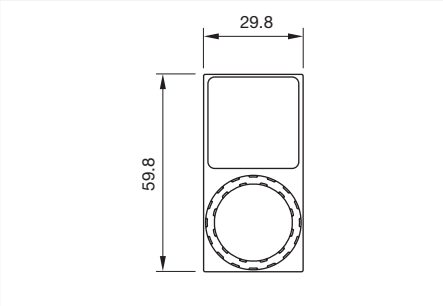

Dimensions [mm]
for Part No. 45-570.1105

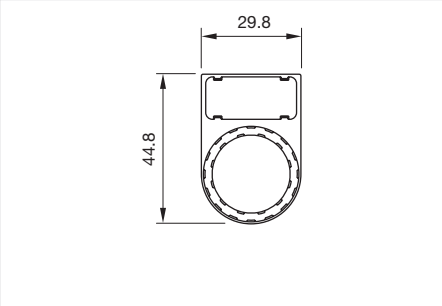

Dimensions [mm]
for Part No. 45-564.1110

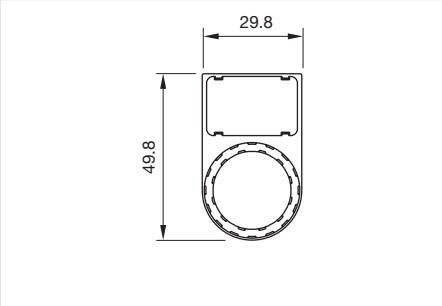

Dimensions [mm]
for Part No. 45-567.1111

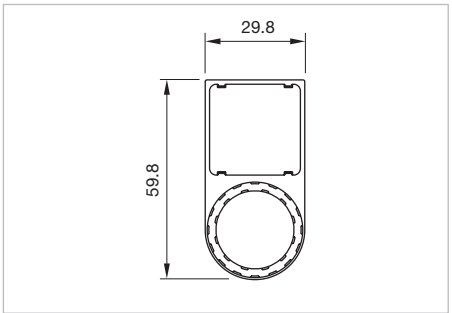

Dimensions [mm]
for Part No. 45-569.1112

Legend support without legend for toggle stick

Product attributes	Material	Colour	Mounting type	Part No.
For legend 27 mm x 27 mm (2x)	plastic	Black	For sticking or snapping in place	45-571.1105
For legend 27 mm x 27 mm (4x)	plastic	Black	For sticking or snapping in place	45-572.1105

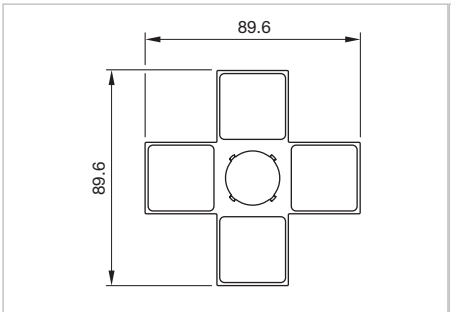

Dimensions [mm]
for Part No. 45-571.1105

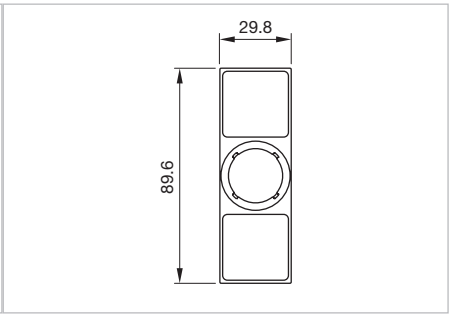

Dimensions [mm]
for Part No. 45-572.1105

Protective cover

Product attributes	Material	Colour	Optics	Part No.
Hinged, with means for sealing	plastic	Black	opaque	45-555.1100
	plastic	Colourless	transparent	45-555.1K00

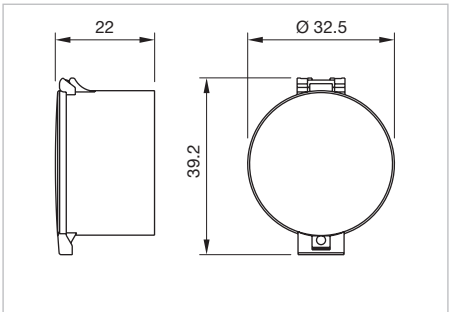

Dimensions [mm]

Protective shroud

Dimensions	Material	Colour	Part No.
Ø 34.8 mm	plastic	Black	45-50N.1100
Ø 46.4 mm	metal	Silver	45-50Q.2100
Ø 39.6 mm	metal	Silver	45-50P.0100

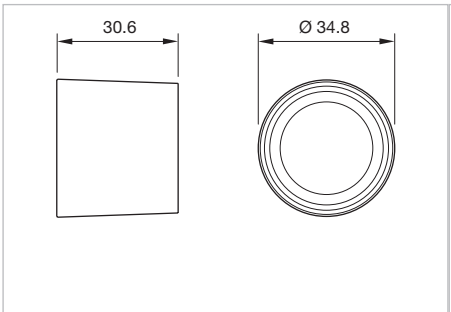

Dimensions [mm]
for Part No. 45-50N.1100

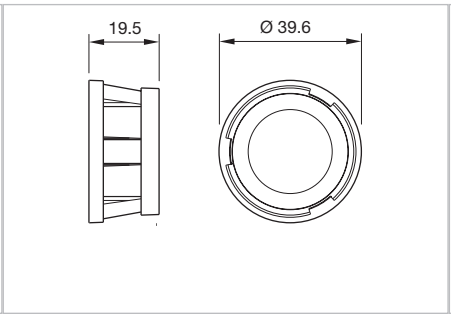

Dimensions [mm]
for Part No. 45-50Q.2100

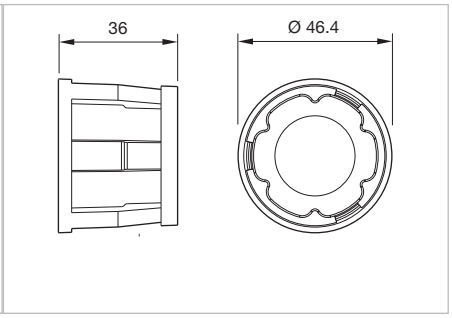

Dimensions [mm]
for Part No. 45-50P.0100

01
02
03
04
09
14
17
18
19
22
31
41
45
51
56
57
61
70
71
82
84
92
96

E stop protective shroud

Product attributes	Material	Colour	Part No.
	plastic	Yellow	45-549.1400
	plastic	Grey	45-549.1800
	plastic	Yellow	45-550.1400
For Emergency stop switch Ø 40 mm, for 5 pad-locks	metal	Yellow	45-539.2400
	metal	Grey	45-539.2800

Additional information

- The protection shroud is not suitable for a proper use of emergency stop. It can obstruct a spontaneous operation of the emergency stop

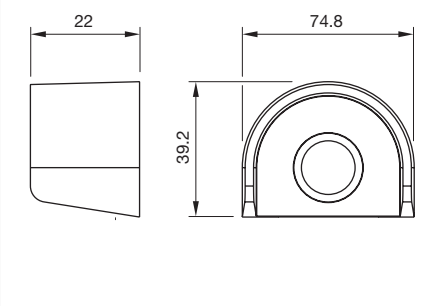

Dimensions [mm]
for Part No. 45-549.1400, 45-549.1800

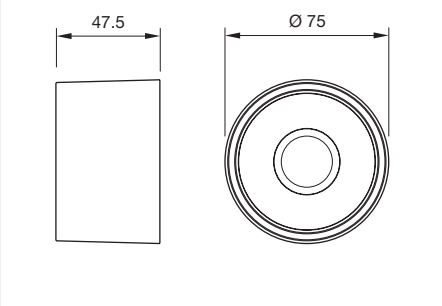

Dimensions [mm]
for Part No. 45-550.1400

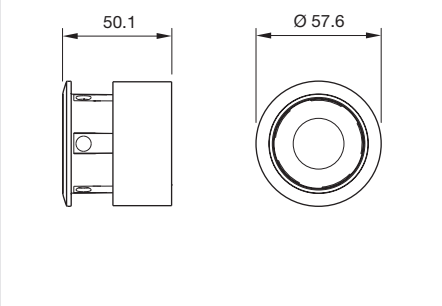

Dimensions [mm]
for Part No. 45-539.2400, 45-539.2800

Sun collar

Product attributes	Material	Colour	Part No.
For pushbutton illuminated	plastic	Black	45-560.1100

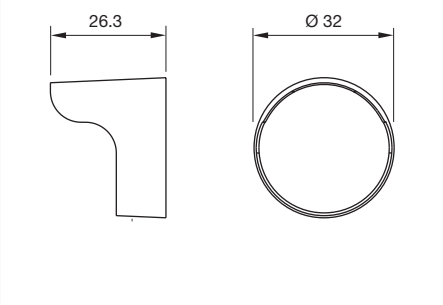

Dimensions [mm]

Rear side

Legend plate for switching elements

Dimensions	Material	Colour	Mounting type	Part No.
10.5 mm x 9.5 mm	plastic	White	for snapping in place	45-523.1900

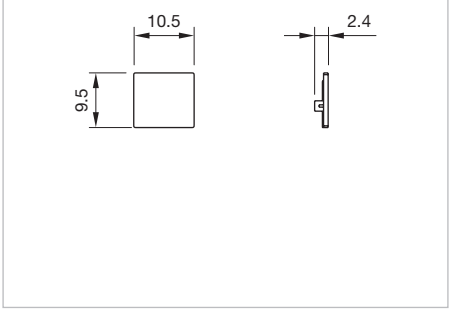

Dimensions [mm]

Test module

Product attributes	Operating voltage	Terminal	Part No.	Wiring diagram
Front mounting	12 - 240 V AC/DC	Screw terminal	45-330.1115	236
Base mounting	12 - 240 V AC/DC	Screw terminal	45-330.2115	236

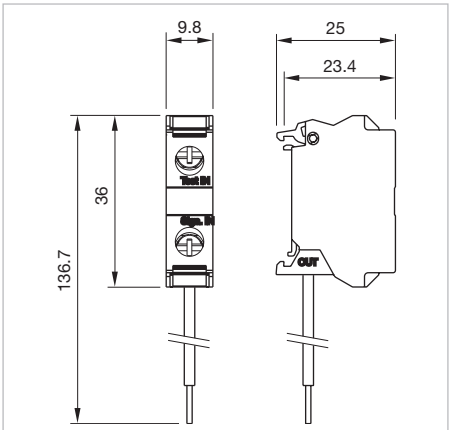

Dimensions [mm]

01
02
03
04
09
14
17
18
19
22
31
41
45
51
56
57
61
70
71
82
84
92
96

Wiring diagrams

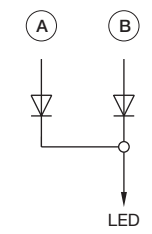

Wiring diagram 236

Come take a look at our YouTube profile today! *Be sure to give us a follow so that you can fully interact with us.*

https://www.youtube.com/user/eaoswitches

www.eao.com

Your Expert Partner for **Human Machine Interfaces**

Mounting

Adapter for reduction of 30.5 mm to 22.3 mm

Product attributes	Material	IP front protection	Part No.
With seal	metal	IP66, IP67, IP69K	45-501.2000

Enclosure

Product attributes	Dimensions	Material	Colour	IP Protection	Part No.
1 mounting hole Ø 22.3 mm 1 x M20	85 mm x 64 mm x 85 mm	plastic	Grey	IP66, IP67, IP69K	45-430.1801
	85 mm x 64 mm x 85 mm	plastic	Yellow	IP66, IP67, IP69K	45-410.1401
1 mounting hole Ø 22.3 mm, top and bottom each 1 x M20	89.4 mm x 64 mm x 85 mm	metal	Yellow	IP66, IP67, IP69K	45-410.2403
	89.4 mm x 64 mm x 85 mm	metal	Grey	IP66, IP67, IP69K	45-430.2803
1 mounting hole Ø 22.3 mm 1 x M20, with protective shroud	85 mm x 64 mm x 85 mm	plastic	Yellow	IP66, IP67, IP69K	45-420.1401
	85 mm x 64 mm x 85 mm	metal	Yellow	IP66, IP67, IP69K	45-420.2403
1 mounting hole Ø 22.3 mm, with protective shroud, top and bottom 1 x M20	89.4 mm x 64 mm x 85 mm	metal	Grey	IP66, IP67, IP69K	45-420.2803
2 mounting holes Ø 22.3 mm, top and bottom 1 x M20	114 mm x 64 mm x 85 mm	plastic	Grey	IP66, IP67, IP69K	45-440.1801
	118 mm x 64 mm x 85 mm	metal	Grey	IP66, IP67, IP69K	45-440.2803
3 mounting holes Ø 22.3 mm, top and bottom 1 x M20	154 mm x 64 mm x 85 mm	plastic	Grey	IP66, IP67, IP69K	45-450.1801
	158 mm x 64 mm x 85 mm	metal	Grey	IP66, IP67, IP69K	45-450.2803
4 mounting holes Ø 22.3 mm, top and bottom 1 x M25	194 mm x 64 mm x 85 mm	plastic	Grey	IP66, IP67, IP69K	45-460.1802
	199 mm x 64 mm x 85 mm	metal	Grey	IP66, IP67, IP69K	45-460.2804
6 mounting holes Ø 22.3 mm, top and bottom 1 x M25	280 mm x 64 mm x 85 mm	plastic	Grey	IP66, IP67, IP69K	45-470.1802
	285 mm x 64 mm x 85 mm	metal	Grey	IP66, IP67, IP69K	45-470.2804

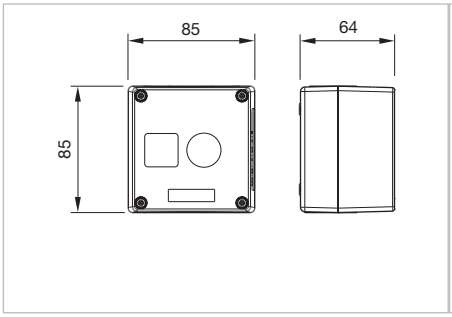

Dimensions [mm]
for Part No. 45-430.1801, 45-410.1401

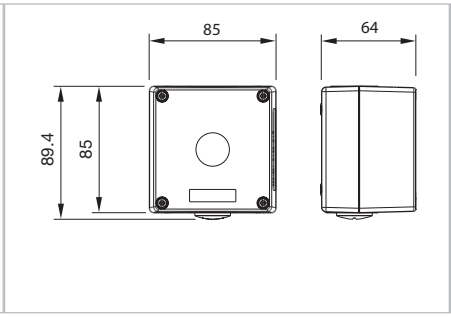

Dimensions [mm]
for Part No. 45-410.2403, 45-430.2803, 45-420.2803

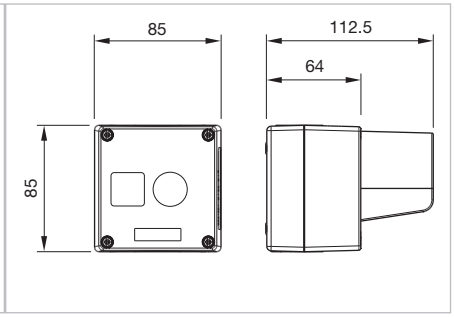

Dimensions [mm]
for Part No. 45-420.1401, 45-420.2403

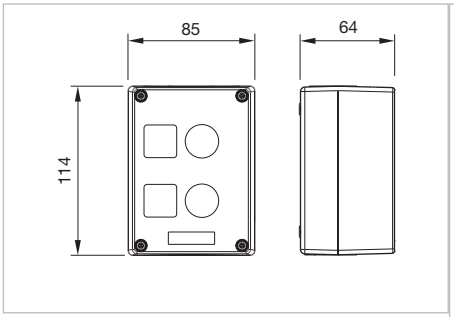

Dimensions [mm]
for Part No. 45-440.1801, 45-440.2803

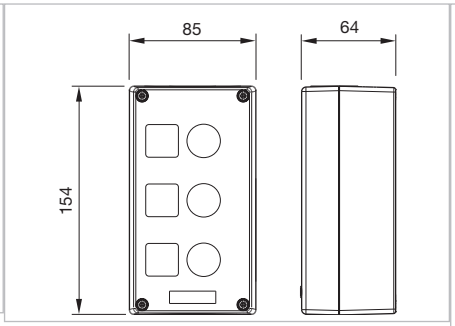

Dimensions [mm]
for Part No. 45-450.1801

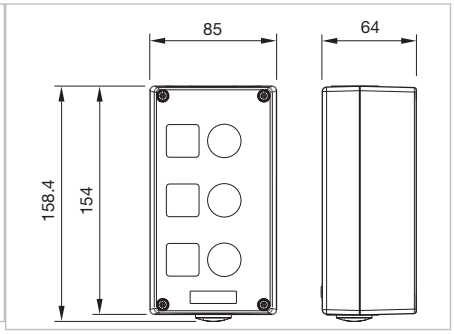

Dimensions [mm]
for Part No. 45-450.2803

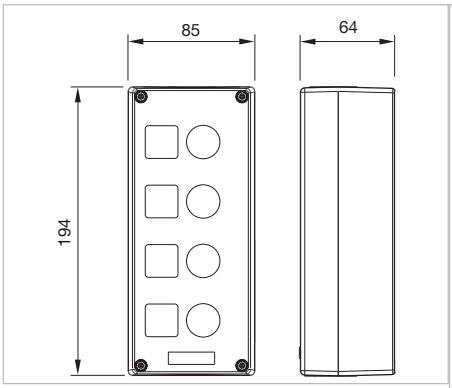

Dimensions [mm]
for Part No. 45-460.1802

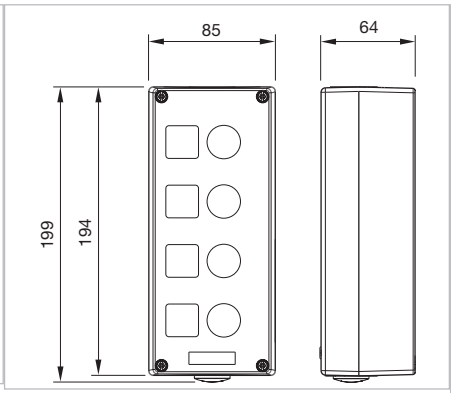

Dimensions [mm]
for Part No. 45-460.2804

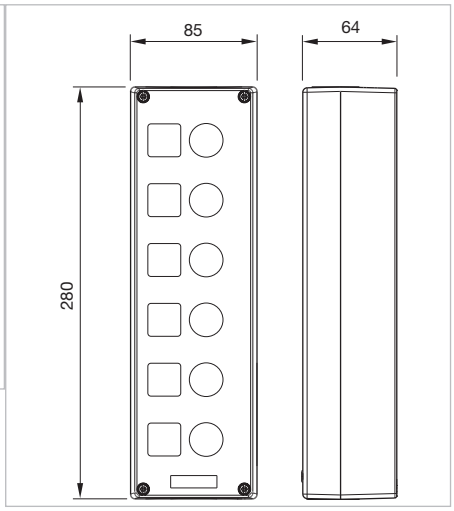

Dimensions [mm]
for Part No. 45-470.1802

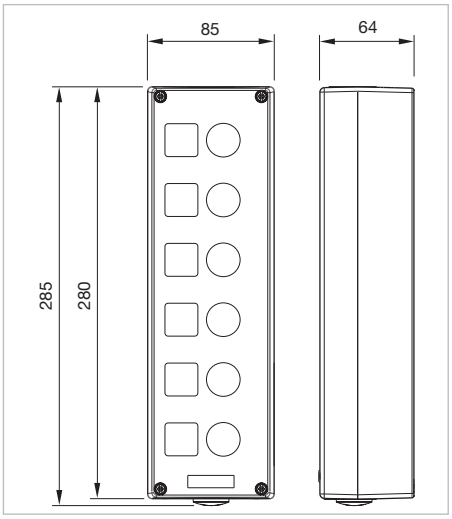

Dimensions [mm]
for Part No. 45-470.2804

Enclosure cover monitoring

Product attributes	Material	Colour	Part No.
With extension plungers	plastic	Black	45-50G.0900

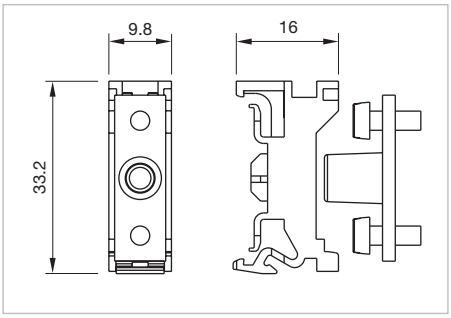

Dimensions [mm]

Cable gland

Material	Colour	IP Protection	Thread	Part No.
plastic	Black	IP66, IP67, IP69K	M20	45-507.1100
	Black	IP66, IP67, IP69K	M25	45-509.1100

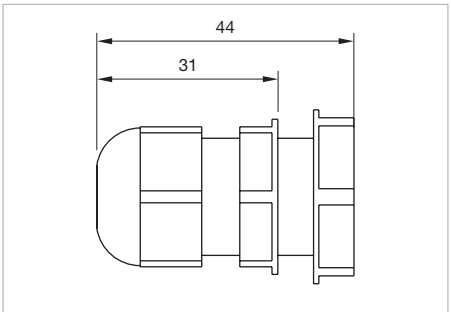

Dimensions [mm]

01
02
03
04
09
14
17
18
19
22
31
41
45
51
56
57
61
70
71
82
84
92
96

Connection piece

Product attributes	Material	Colour	IP Protection	Thread	Part No.
For connecting 2 enclosures, with hexagonal nut	plastic	Black	IP66, IP67, IP69K	M20 / M20	45-50C.1900
	plastic	Black	IP66, IP67, IP69K	M20 / M25	45-50D.1900
	plastic	Black	IP66, IP67, IP69K	M25 / M26	45-50E.1900
	metal	Silver	IP66, IP67, IP69K	M20 / M20	45-50C.2900
	metal	Silver	IP66, IP67, IP69K	M20 / M25	45-50D.2900
	metal	Silver	IP66, IP67, IP69K	M25 / M26	45-50E.2900

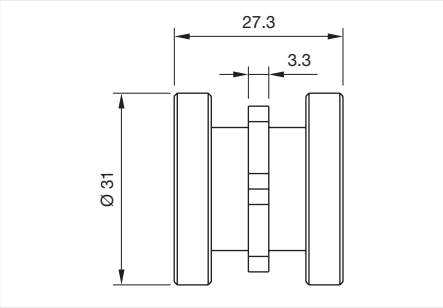

Dimensions [mm]
for Part No. 45-50C.1900

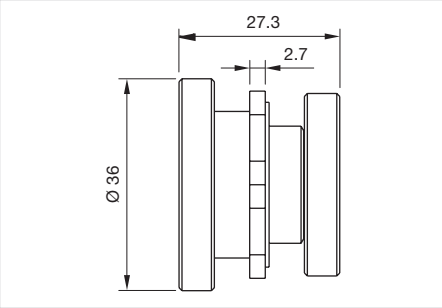

Dimensions [mm]
for Part No. 45-50D.1900

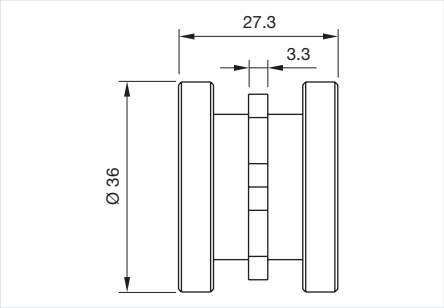

Dimensions [mm]
for Part No. 45-50E.1900

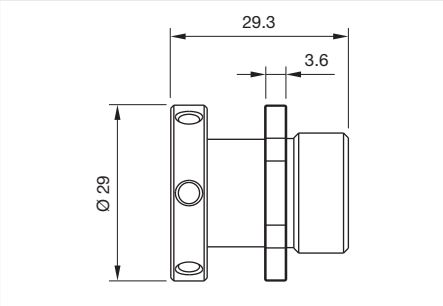

Dimensions [mm]
for Part No. 45-50C.2900

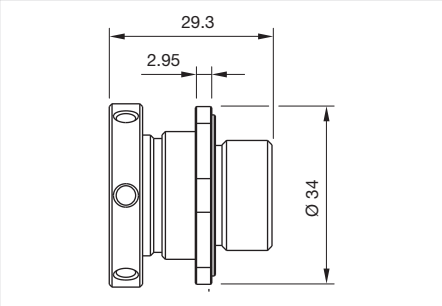

Dimensions [mm]
for Part No. 45-50D.2900

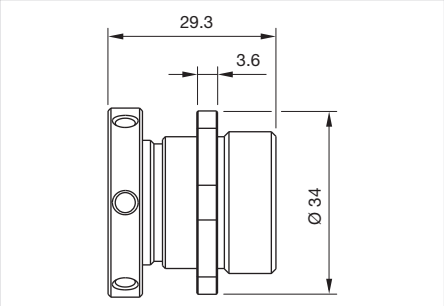

Dimensions [mm]
for Part No. 45-50E.2900

Dimensions incl. mounting depth of 3 or 4 elements

Indicator, Pushbutton, Illuminated pushbutton (flush design)

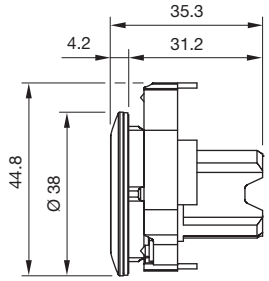

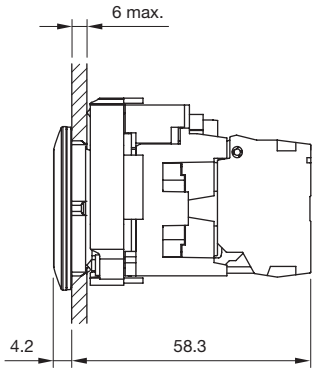

Keylock switch (flush design)

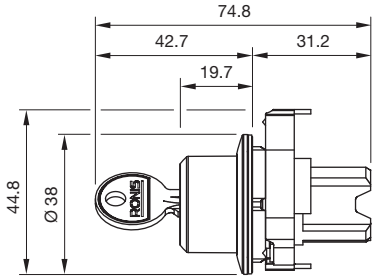

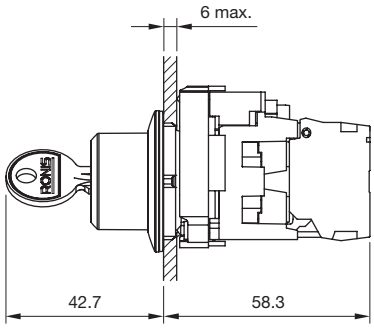

Selector switch short lever (flush design)

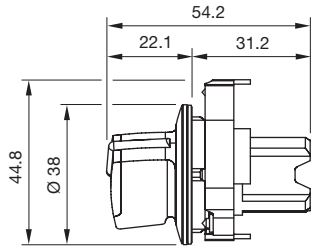

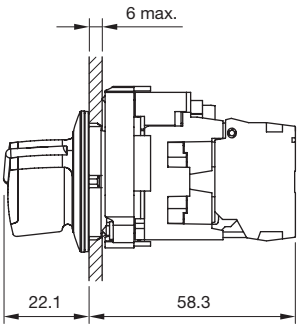

Selector switch long lever (flush design)

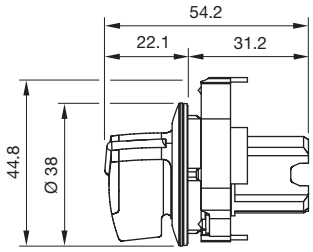

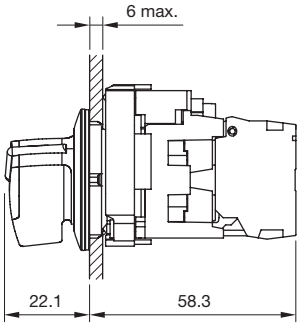

01
02
03
04
09
14
17
18
19
22
31
41
45
51
56
57
61
70
71
82
84
92
96

Indicator full face illumination (raised design)

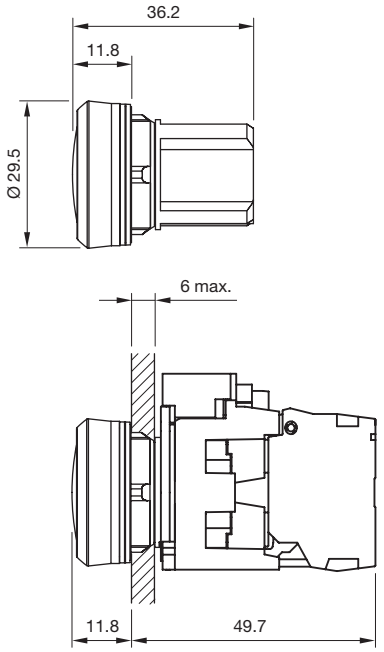

Indicator front illumination, Pushbutton, Illuminated pushbutton, Lens level with front ring (raised design)

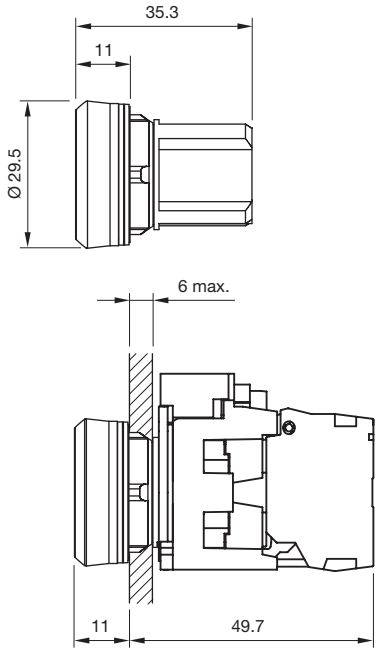

Duo indicator

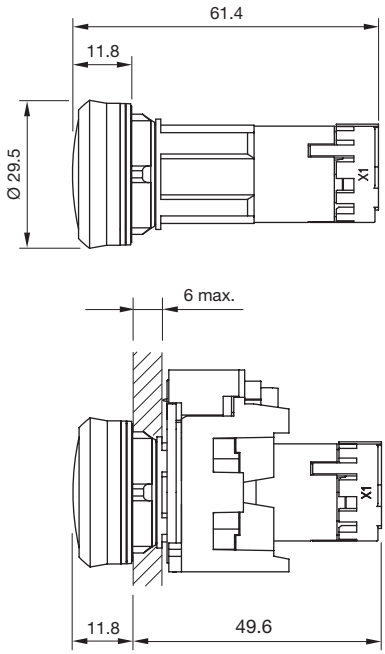

Buzzer

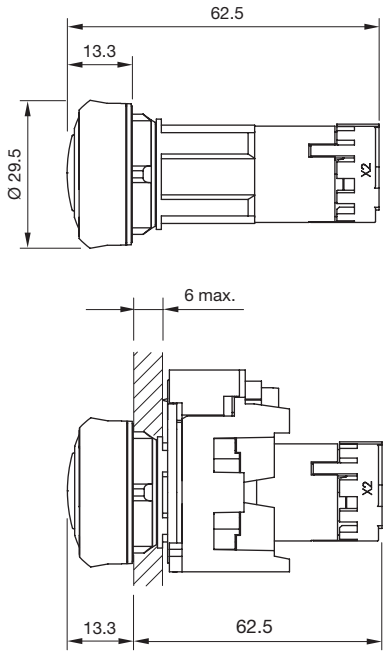

Pushbutton, Illuminated pushbutton, lens raised above front ring (raised design)

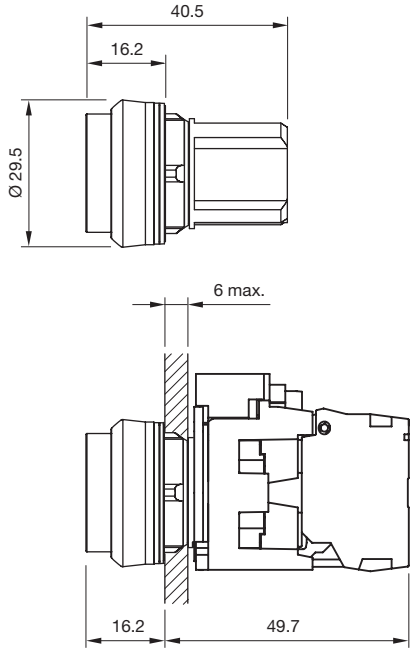

Pushbutton, lens lower than front ring (raised design)

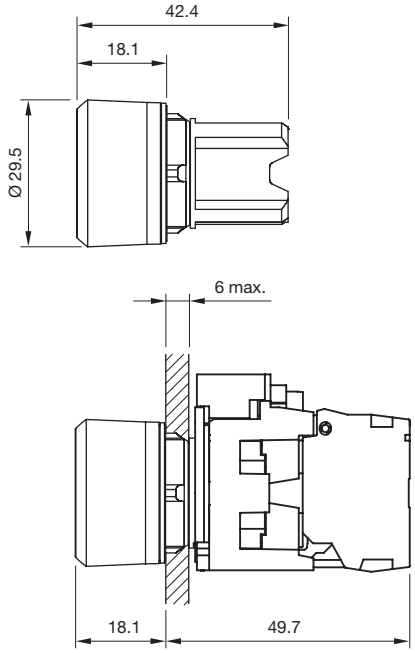

Pushbutton, Illuminated pushbutton, lens lower than front ring, with castellation (raised design)

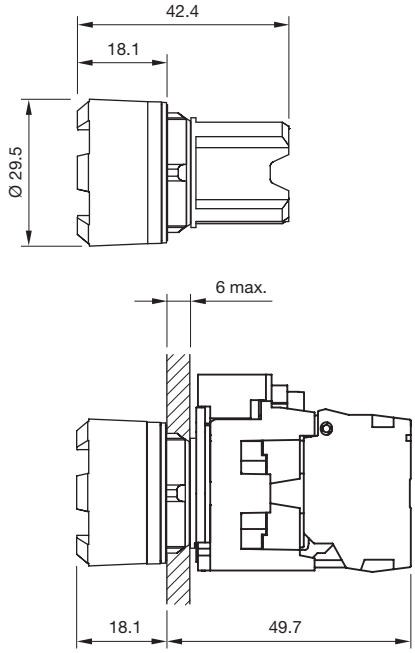

Double pushbutton, Lens level with front ring (raised design)

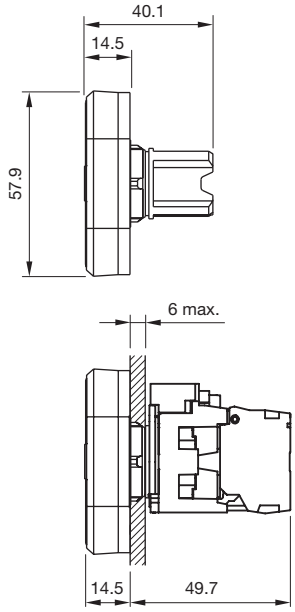

01
02
03
04
09
14
17
18
19
22
31
41
45
51
56
57
61
70
71
82
84
92
96

Double pushbutton, level with/raised above front ring (raised design)

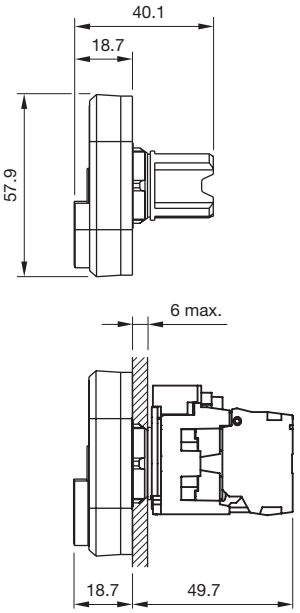

Emergency stop switch Ø 33.8 mm (raised design)

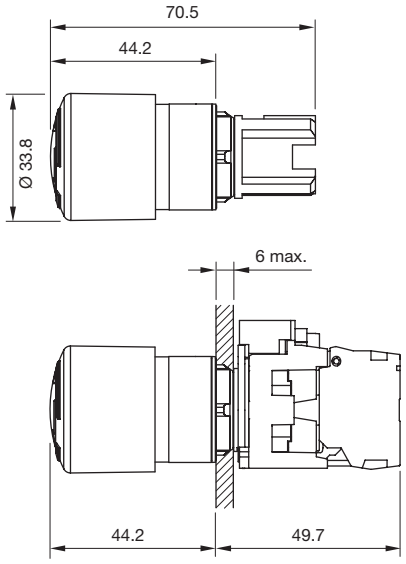

Emergency stop switch, Stop switch Ø 40 mm (raised design)

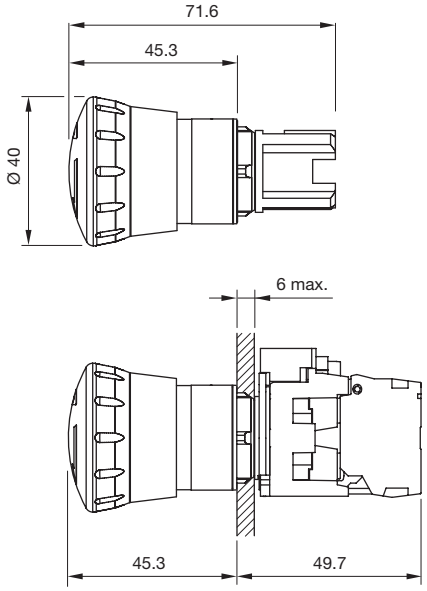

Emergency stop switch, Stop switch Ø 40 mm (raised design)

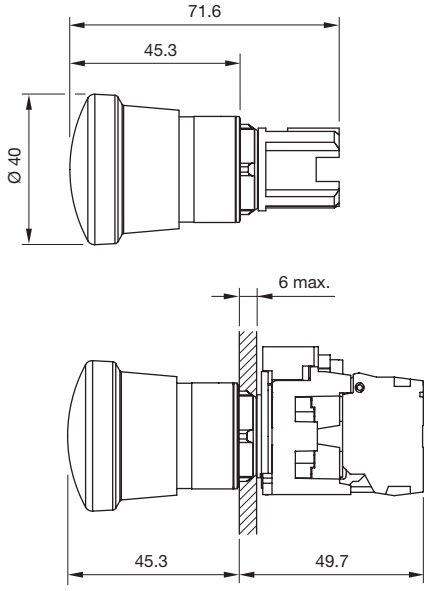

Emergency stop switch Ø 60 mm (raised design)

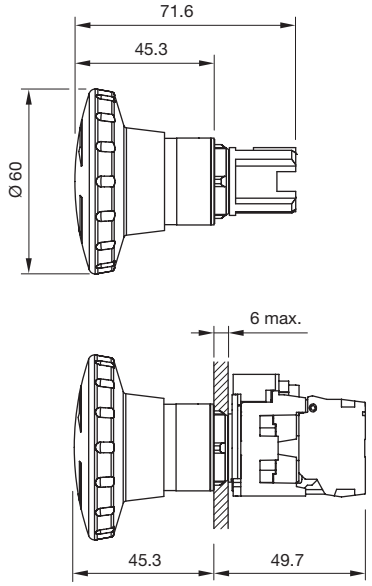

Emergency stop switch with key Ø 40 mm (raised design)

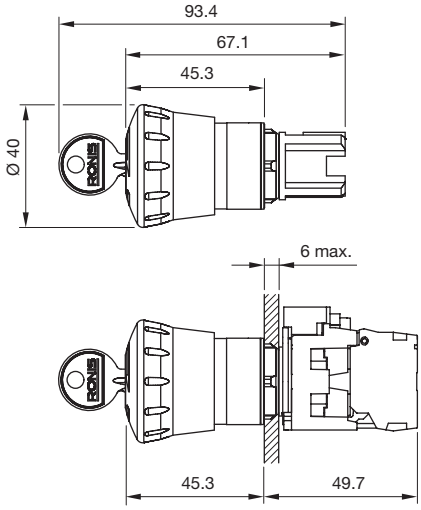

Stop switch Ø 29.5 mm (raised design)

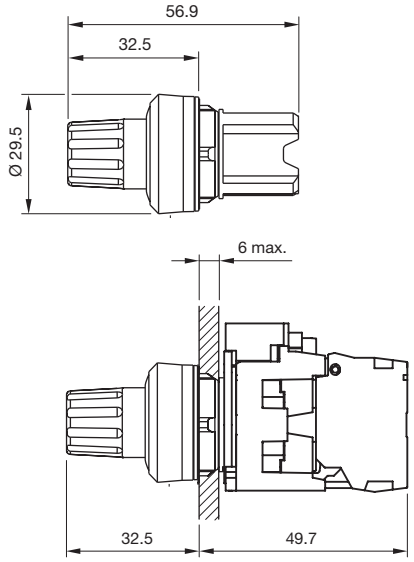

Palm switch

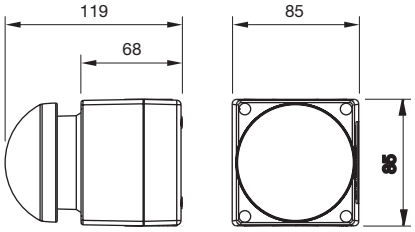

01
02
03
04
09
14
17
18
19
22
31
41
45
51
56
57
61
70
71
82
84
92
96

Mushroom-head pushbutton Ø 30 mm (raised design)

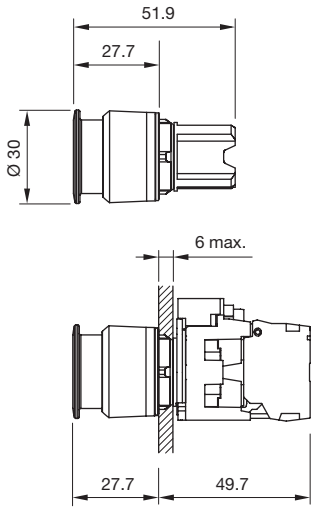

Mushroom-head pushbutton Momentary, Maintain, Ø 40 mm (raised design)

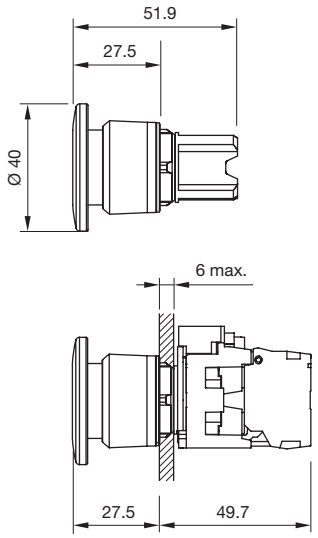

Mushroom-head pushbutton Momentary/Maintain, Momentary/Momentary, Ø 40 mm (raised design)

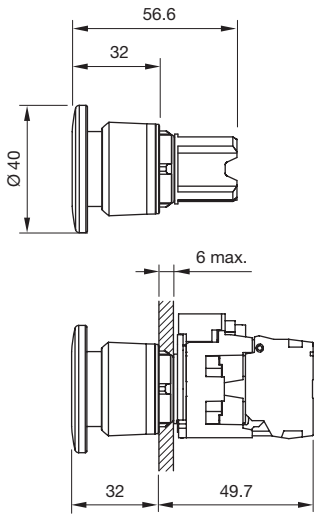

Mushroom-head pushbutton Ø 60 mm (raised design)

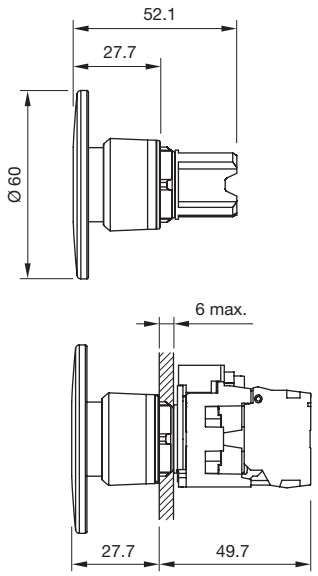

Keylock switch (raised design)

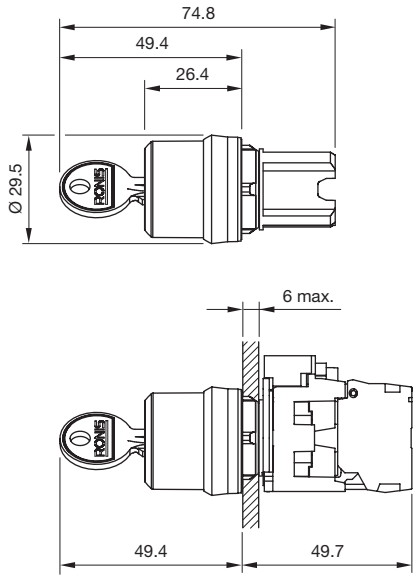

ID keylock switch (raised design)

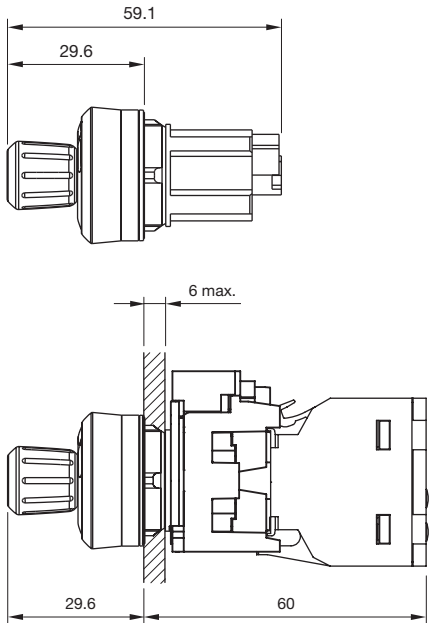

Selector switch, round lever (raised design)

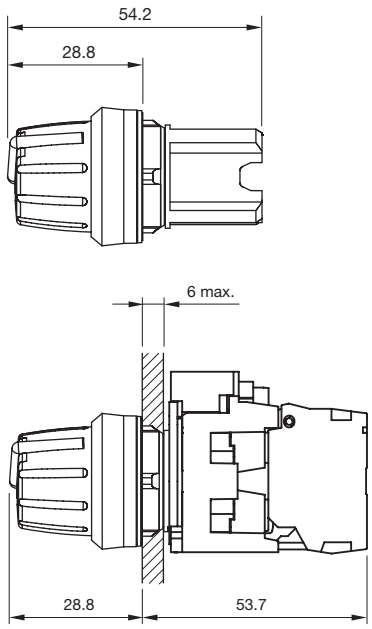

Selector switch, short lever (raised design)

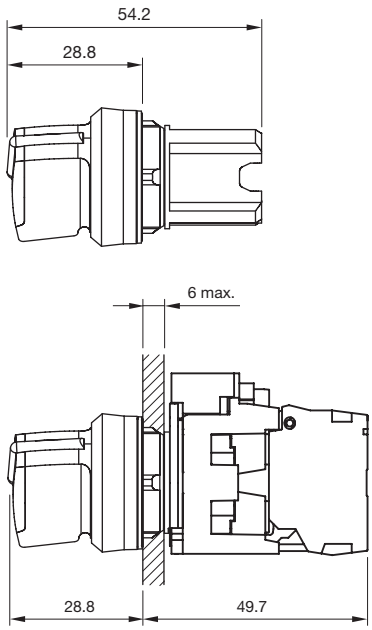

01
02
03
04
09
14
17
18
19
22
31
41
45
51
56
57
61
70
71
82
84
92
96

Selector switch, long lever (raised design)

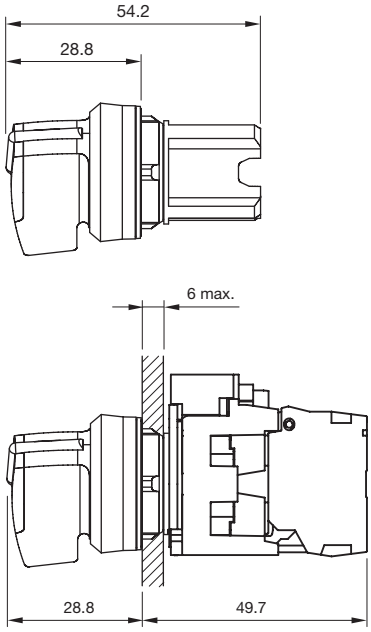

Potentiometer (raised design)

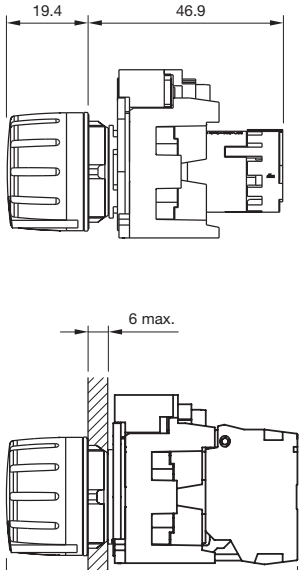

Toggle stick (raised design)

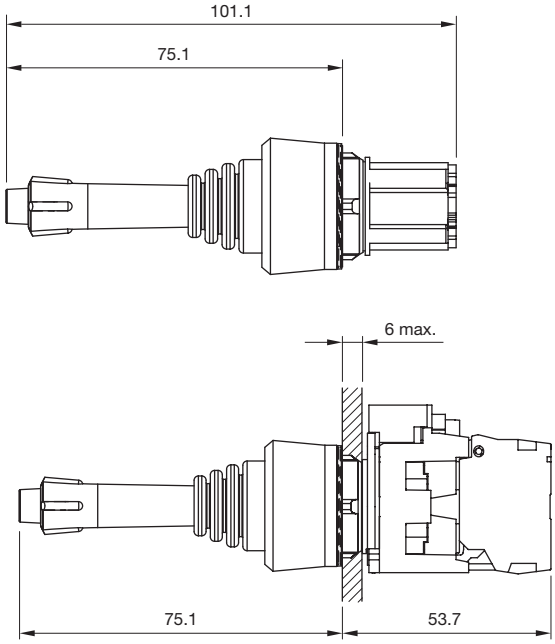

Toggle switch (raised design)

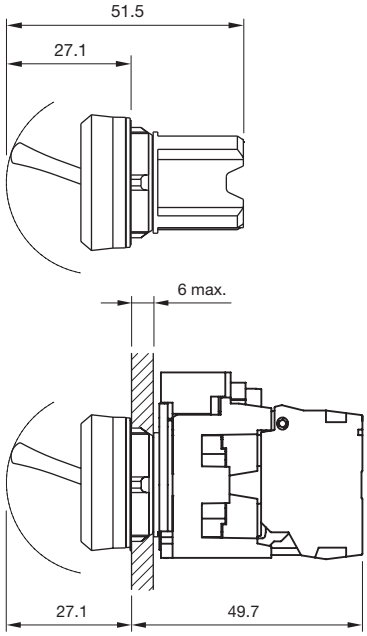

Indicator actuator

Material

Actuator element
Plastic

Front ring
Plastic or metal

Actuator housing
Plastic or metal

Ambient conditions

Operating temperature
–25 °C … +70 °C

Storage temperature
–40 °C … +80 °C

Protection degree
IP66, IP67, IP69K

Vibration resistance
According to IEC 60068-2-6
2 … 500 Hz: 5 g

Shock resistance
According to IEC 60068-2-27
Sinusoidal half-wave 50 g / 11 ms

Climatic ambient conditions
During operation according to IEC 60721:
3K6, 3C3, 3S2, 3M6

Duo Indicator

Material

Actuator element
Plastic

Front ring
Plastic or metal

Actuator housing
Plastic or metal

Mechanical characteristics

Terminal
Screw terminal
- Solid without end sleeves 2 x (1.0 … 1.5 mm^2)
- Solid with end sleeves 2 x (0.5 … 0.75 mm^2)
- Finely stranded without end sleeves 2 x (0.5 … 0.75 mm^2)
- Finely stranded with end sleeves 2 x (0.5 … 1.5 mm^2)
- For AWG cables for auxiliary contacts 2 x (18 … 14)

Tightening torque
Screw terminal 0.8 … 1 Nm

Electrical characteristics

Insulation voltage
Rated value 320 V

Pollution degree
3

Surge voltage resistance
Rated value 4 kV

Operating voltage
at AC/DC
- Rated value 6 … 24 V

at AC
- Rated value 110 or 230 V

Ambient conditions

Operating temperature
–25 °C … +70 °C

Storage temperature
–40 °C … +80 °C

Protection degree
IP66, IP67, IP69K

Vibration resistance
According to IEC 60068-2-6
10 … 500 Hz: 5 g

Shock resistance
According to IEC 60068-2-27
Sinusoidal half-wave 50 g / 11 ms

Climatic ambient conditions
During operation according to IEC 60721:
3B2, 3K6, 3S2, 3M6

01
02
03
04
09
14
17
18
19
22
31
41
45
51
56
57
61
70
71
82
84
92
96

Buzzer

Material

Actuator element
Plastic

Front bezel
Plastic or metal

Actuator housing
Plastic or metal

Mechanical characteristics

Terminal
Screw terminal
- Solid without end sleeves 2 x (1.0 … 1.5 mm²)
- Solid with end sleeves 2 x (0.5 … 0.75 mm²)
- Finely stranded without end sleeves 2 x (0.5 … 0.75 mm²)
- Finely stranded with end sleeves 2 x (0.5 … 1.5 mm²)
- For AWG cables for auxiliary contacts 2 x (18 … 14)

Tightening torque
Screw terminal 0.8 … 1 Nm

Electrical characteristics

Frequency (tone)
Approx. 2.4 kHz continuous tone only

Sound pressure
95 db (A) ±8 dB at a distance of 0.1 m

Insulation voltage
Rated value 320 V

Pollution degree
3

Surge voltage resistance
Rated value 4 kV

Operating voltage
at AC
- Rated value 24 … 24 V

at DC
- Rated value 24 … 24 V

Ambient conditions

Operating temperature
–25 °C … +70 °C

Storage temperature
–40 °C … +80 °C

Protection degree
IP40

Vibration resistance
According to IEC 60068-2-6
10 … 500 Hz: 5 g

Shock resistance
According to IEC 60068-2-27
Sinusoidal half-wave 50 g/11 ms

Climatic ambient conditions
During operation according to IEC 60721:
3B2, 3K6, 3S2, 3M6

Pushbutton actuator

Material

Actuator element
Plastic

Front ring
Plastic or metal

Actuator housing
Plastic or metal

Mechanical characteristics

Operating frequency
- Momentary max. 3 600 / h
- Maintain max. 1 800 / h

Mechanical lifetime
- Momentary 500 000 cycles of operation
- Maintain 1 000 000 cycles of operation

Ambient conditions

Operating temperature
–25 °C … +70 °C

Storage temperature
–40 °C … +80 °C

Protection degree
IP66, IP67, IP69K

Vibration resistance
According to IEC 60068-2-6
20 … 500 Hz: 5 g

Shock resistance
According to IEC 60068-2-27
Sinusoidal half-wave 50 g / 11 ms

Climatic ambient conditions
During operation according to IEC 60721:
3K6, 3C3, 3S2, 3M6

01
02
03
04
09
14
17
18
19
22
31
41
45
51
56
57
61
70
71
82
84
92
96

Double pushbutton actuator, Double pushbutton actuator illuminated

Material

Actuator element
Plastic

Front ring
Plastic or metal

Actuator housing
Plastic or metal

Mechanical characteristics

Operating frequency
max. 3 600 / h

Mechanical lifetime
2 000 000 cycles of operation

Ambient conditions

Operating temperature
– 25 °C … + 70 °C

Storage temperature
– 40 °C … + 80 °C

Protection degree
IP66, IP67, IP69K

Vibration resistance
According to IEC 60068-2-6
10 … 500 Hz: 5 g

Shock resistance
According to IEC 60068-2-27
Sinusoidal half-wave 50 g / 11 ms

Climatic ambient conditions
During operation according to IEC 60721:
3K6, 3C3, 3S2, 3M6, 3B2

Illuminated pushbuton actuator

Material

Actuator element
Plastic

Front ring
Plastic or metal

Actuator housing
Plastic or metal

Mechanical characteristics

Operating frequency
- Momentary max. 3 600 / h
- Maintain max. 1 800 / h

Mechanical lifetime
- Momentary 3 000 000 cycles of operation
- Maintain 500 000 cycles of operation

Ambient conditions

Operating temperature
– 25 °C … + 70 °C

Storage temperature
– 40 °C … + 80 °C

Protection degree
IP66, IP67, IP69K

Vibration resistance
According to IEC 60068-2-6
20 … 500 Hz: 5 g

Shock resistance
According to IEC 60068-2-27
Sinusoidal half-wave 50 g / 11 ms

Climatic ambient conditions
During operation according to IEC 60721:
3K6, 3C3, 3S2, 3M6

Emergency stop switch actuator

Material

Actuator element
Plastic red

Actuator housing
Plastic or metal

Mechanical characteristics

Type of unlocking device
Twist to release, pull release or key to release

Operating frequency
Max. 600 / h

Mechanical lifetime
300 000 cycles of operation

Ambient conditions

Operating temperature
– 25 °C … + 70 °C

Storage temperature
– 40 °C … + 80 °C

Protection degree
IP66, IP67, IP69K

Vibration resistance
According to IEC 60068-2-6
2 … 500 Hz: 5 g

Shock resistance
According to IEC 60068-2-27
Sinusoidal half-wave 50 g / 11 ms

Climatic ambient conditions
During operation according to IEC 60721:
3K6, 3C3, 3S2, 3M6

Stop switch actuator

Material

Actuator element
Plastic red

Actuator housing
Plastic or metal

Mechanical characteristics

Type of unlocking device
Twist to release

Operating frequency
Max. 600 / h

Mechanical lifetime
300 000 cycles of operation

Ambient conditions

Operating temperature
– 25 °C … + 70 °C

Storage temperature
– 40 °C … + 80 °C

Protection degree
IP66, IP67, IP69K

Vibration resistance
According to IEC 60068-2-6
2 … 500 Hz: 5 g

Shock resistance
According to IEC 60068-2-27
Sinusoidal half-wave 50 g / 11 ms

Climatic ambient conditions
During operation according to IEC 60721:
3K6, 3C3, 3S2, 3M6

01
02
03
04
09
14
17
18
19
22
31
41
45
51
56
57
61
70
71
82
84
92
96

Palm switch

Material

Actuator element
Plastic or metal, red or black

Actuator housing
Plastic or metal

Mechanical characteristics

Type of unlocking device
Pull to release

Electrical characteristics

Operating voltage
at AC
- Rated value 5 … 500 V

at DC
- Rated value 5 … 500 V

Ambient conditions

Operating temperature
–25 °C … +70 °C

Storage temperature
–40 °C … +80 °C

Protection degree
IP66, IP67, IP69K

Vibration resistance
According to IEC 60068-2-6
10 … 500 Hz: 5 g

Shock resistance
According to IEC 60068-2-27
Sinusoidal half-wave 50 g / 11 ms

Climatic ambient conditions
During operation according to IEC 60721:
3K6, 3C3, 3S2, 3M6, 3B2

Mushroom-head pushbuton actuator

Material

Actuator element
Plastic

Front ring
Plastic or metal

Actuator housing
Plastic or metal

Mechanical characteristics

Type of unlocking device
Pull release

Operating frequency
- Momentary max. 3 600 / h
- Maintain max. 1 800 / h

Mechanical lifetime
- Momentary 10 000 000 cycles of operation
- Maintain 500 000 cycles of operation

Ambient conditions

Operating temperature
–25 °C … +70 °C

Storage temperature
–40 °C … +80 °C

Vibration resistance
According to IEC 60068-2-6
20 … 500 Hz: 5 g

Shock resistance
According to IEC 60068-2-27
Sinusoidal half-wave 50 g / 11 ms

Protection degree
IP66, IP67, IP69K

Climatic ambient conditions
During operation according to IEC 60721:
3K6, 3C3, 3S2, 3M6

Keylock switch actuator

Material

Actuator element
Metal

Front ring
Plastic or metal

Actuator housing
Plastic or metal

Mechanical characteristics

Operating frequency
Max. 1 800 / h

Mechanical lifetime
1 000 000 cycles of operation

Ambient conditions

Operating temperature
– 25 °C … + 70 °C

Storage temperature
– 40 °C … + 80 °C

Protection degree
IP66, IP67, IP69K

Vibration resistance
According to IEC 60068-2-6
10 … 500 Hz: 5 g

Shock resistance
According to IEC 60068-2-27
Sinusoidal half-wave 50 g / 11 ms

Climatic ambient conditions
During operation according to IEC 60721:
3K6, 3C3, 3S2, 3M6

ID keylock switch

Material

Actuator element
Plastic

Front ring
Plastic or metal

Actuator housing
Plastic

Mechanical characteristics

Terminals
Screw terminal front mounting
- Solid with end sleeves
  1 x (0.2 … 2.5 mm²), 2 x (0.2 … 0.75 mm²)
- Solid without end sleeves
  1 x (0.2 … 2.5 mm²), 2 x (0.2 … 0.75 mm²)
- Finely stranded with end sleeves
  1 x (0.2 … 2.5 mm²), 2 x (0.25 … 0.75 mm²)
- Finely stranded with end sleeves
  1 x (0.2 … 2.5 mm²), 2 x (0.2 … 0.75 mm²)
- For AWG cables
  1 x (24 … 14), (24 … 19)

Tightening torque
Screw terminal
0.35 … 0.4 Nm

Mechanical lifetime
100 000 cycles of operation

Number of NO contacts
5

ID-Key

Authorization level	Key colour
1	green
1+2	yellow
1+2+3	red
1+2+3+4	blue

Electrical characteristics

Operating voltage
24 VDC

01
02
03
04
09
14
17
18
19
22
31
41
45
51
56
57
61
70
71
82
84
92
96

Ambient conditions

Operating temperature
–25 °C … +70 °C

Storage temperature
–40 °C … +80 °C

Protection degree
IP65

Climatic ambient conditions
During operation according to IEC 60721:
3M6, 3S2, 3B2, 3C3, 3K6 (with relative air humidity of 10 … 95 %)

Selector switch actuator

Material

Actuator element
Round lever, plastic, illuminable
Short lever, plastic, illuminable
Long lever, plastic, illuminable

Front ring
Plastic or metal

Actuator housing
Plastic or metal

Mechanical characteristics

Operating frequency
Max. 1 800 / h

Mechanical lifetime
1 000 000 cycles of operation

Ambient conditions

Operating temperature
–25 °C … +70 °C

Storage temperature
–40 °C … +80 °C

Protection degree
IP66, IP67, IP69K

Vibration resistance
According to IEC 60068-2-6
10 … 500 Hz: 5 g

Shock resistance
According to IEC 60068-2-27
Sinusoidal half-wave 50 g / 11 ms

Climatic ambient conditions
During operation according to IEC 60721:
3K6, 3C3, 3S2, 3M6

Potentiometer

Material

Actuator element
Round lever, plastic

Front ring
Plastic or metal

Actuator housing
Plastic or metal

Mechanical characteristics

Terminals
Screw terminal
- Solid 2 x (1.0 … 1.5 mm²)
  - With end sleeves 2 x (0.5 … 0.75 mm²)
- Finely stranded
  - Without end sleeves 2 x (0.5 … 0.75 mm²)
  - With end sleeves 2 x (0.5 … 1.5 mm²)
  - For AWG cables for auxiliary contacts 2 x (18 … 14)

Tightening torque
0.8 … 1 Nm

Turning frequency
Max. 1 800 / h

Mechanical lifetime
25 000 turning cycles

Vibration resistance
according to IEC 60068-2-6
10 … 500 Hz: 5 g

Shock resistance
according to IEC 60068-2-27
Sinusoidal half-wave 50 g / 11 ms

Slewing range
275° ±2°

Electrical characteristics

Active power consumption
0.5 W

Insulation voltage
Rated value 500 V

Ambient conditions

Operating temperature
−25 °C … +70 °C

Storage temperature
−40 °C … +80 °C

Protection degree
IP66, IP67, IP69K

Climatic ambient conditions
During operation according to IEC 60721:
3K6, 3C3, 3S2, 3M6

Toggle stick actuator

Material

Actuator element
Plastic

Front ring
Plastic or metal

Actuator housing
Plastic or metal

Mechanical characteristics

Operating frequency
3 600 / h

Mechanical lifetime
Momentary: 250 000 cycles of operation per direction of actuation
Maintain: 100 000 cycles of operation per direction of actuation

Deflection angle
Max. 30 °

Ambient conditions

Operating temperature
−25 °C … +70 °C

Storage temperature
−40 °C … +80 °C

Protection degree
IP65, IP67

Vibration resistance
According to IEC 60068-2-6
10 … 500 Hz: 5 g

Shock resistance
According to IEC 60068-2-27
Sinusoidal half-wave 50 g / 11 ms

Climatic ambient conditions
During operation according to IEC 60721:
3K6, 3C3, 3S2, 3M6

01
02
03
04
09
14
17
18
19
22
31
41
45
51
56
57
61
70
71
82
84
92
96

Toggle switch actuator

Material

Actuator element
Plastic

Front ring
Plastic or metal

Actuator housing
Plastic or metal

Mechanical characteristics

Operating frequency
Max. 1 800 / h

Mechanical lifetime
1 000 000 cycles of operation

Ambient conditions

Operating temperature
– 25 °C … + 70 °C

Storage temperature
– 40 °C … + 80 °C

Protection degree
IP66, IP67, IP69K

Vibration resistance
According to IEC 60068-2-6
10 … 500 Hz: 5 g

Shock resistance
According to IEC 60068-2-27
Sinusoidal half-wave 50 g / 11 ms

Climatic ambient conditions
During operation according to IEC 60721:
3K6, 3C3, 3S2, 3M6

Slow-make switching element

Switching system

The double-break, slow-make switching element is equipped with normally open or normally closed contact. The normally closed contact has forced opening. Slow-make contacts with forced action are ideal for high switch ratings. Up to six switching elements can be snapped to each holder.

The NC contact opens automatically upon disconnection of the actuator. On delivery, the contact is open (= safe state). Activation (= NC contacts on the non-actuated commanding device are closed) takes place upon first-time actuation after the contact block is snapped onto the actuator.

Material

Material of contact
Silver alloy

Housing
Plastic

Mechanical characteristics

Terminals
Screw terminal
- Solid 2 x (1.0 … 1.5 mm²)
  - With end sleeves 2 x (0.5 … 0.75 mm²)
- Finely stranded
  - Without end sleeves 2 x (0.5 … 0.75 mm²)
  - With end sleeves 2 x (0.5 … 1.5 mm²)
  - For AWG cables for auxiliary contacts 2 x (18 … 14)

Spring-type terminal (SP)
- Solid 2 x (0.25 … 1.5 mm²)
- Finely stranded
  - Without end sleeves 2 x (0.5 … 1.5 mm²)
  - With end sleeves 2 x (0.5 … 0.75 mm²)
  - For AWG cables for auxiliary contacts 2 x (24 … 16)

Tightening torque
Screw terminal, spring-type terminal 0.8 … 0.9 Nm

Operating frequency
Max. 3 600 / h

Mechanical lifetime
10 000 000 cycles of operation

Electrical characteristics

Standards
The switches comply with the “Standards for low-voltage switching devices” EN IEC 60947-5-1

Thermal current I_{th}
10 A

Insulation voltage
Rated value 500 V

Pollution degree
3

Surge voltage resistance
Rated value 6 kV

Contact reliability
One contact failure per 100 million switching operations (17 V, 5 mA)
One contact failure per 10 million switching operations (5 V, 1 mA)

Operating voltage
at AC
- Rated value 5 … 500 V

at DC
- Rated value 5 … 500 V

Switching voltage and switching current
at AC-12

Voltage	24 V	230 V	500 V
Current	10 A	10 A	10 A

at AC-15

Voltage	24 V	230 V	400 V	500 V
Current	6 A	6 A	3 A	1.4 A

at DC-12

Voltage	24 V	48 V	110 V	230 V	400 V	500 V
Current	10 A	5 A	2.5 A	1 A	0.3 A	0.2 A

at DC-13

Voltage	24 V	48 V	110 V	230 V	400 V	500 V
Current	3 A	1.5 A	0.7 A	0.3 A	0.1 A	0.07 A

Ambient conditions

Operating temperature
−25 °C … +70 °C

Storage temperature
−40 °C … +80 °C

Protection degree
IP40 housing
IP20 terminal

Vibration resistance
According to IEC 60068-2-6
2 … 500 Hz: 5 g

Shock resistance
According to IEC 60068-2-27
Sinusoidal half-wave 50 g / 11 ms

Climatic ambient conditions
During operation according to IEC 60721:
3K6, 3C3, 3S2, 3M6

Approvals

Approbations
CCC
CSA
UL

Declaration of conformity
CE

01
02
03
04
09
14
17
18
19
22
31
41
45
51
56
57
61
70
71
82
84
92
96

Illumination element

Material

Housing
Plastic

Mechanical characteristics

Terminals
Screw terminal
- Solid 2 x (1.0 … 1.5 mm²)
  - With end sleeves 2 x (0.5 … 0.75 mm²)
- Finely stranded
  - Without end sleeves 2 x (0.5 … 0.75 mm²)
  - With end sleeves 2 x (0.5 … 1.5 mm²)
  - For AWG cables for auxiliary contacts 2 x (18 … 14)

Spring-type terminal (SP)
- Solid 2 x (0.25 … 1.5 mm²)
- Finely stranded
  - Without end sleeves 2 x (0.5 … 1.5 mm²)
  - With end sleeves 2 x (0.5 … 0.75 mm²)
  - For AWG cables for auxiliary contacts 2 x (24 … 16)

Tightening torque
Screw terminal, spring-type terminal 0.8 … 0.9 Nm

Electrical characteristics

Standards
The switches comply with the “Standards for low-voltage switching devices” EN IEC 60947-5-1

Electrical life
100 000 h

Insulation voltage
Rated value 320 V

Surge voltage resistance
Rated value 4 kV

Ambient conditions

Operating temperature
–25 °C … +70 °C

Storage temperature
–40 °C … +80 °C

Protection degree
IP20 terminal

Shock resistance
According to IEC 60068-2-27
Sinusoidal half-wave 50 g / 11 ms

Vibration resistance
According to IEC 60068-2-6
2 … 500 Hz: 5 g

Climatic ambient conditions
During operation according to IEC 60721:
3K6, 3C3, 3S2, 3M6

Optical characteristics

Luminous intensity

Red	450 … 1120 mcd
Amber	450 … 1120 mcd
Yellow	900 … 1400 mcd
Green	900 … 1400 mcd
Blue	280 … 710 mcd
White	900 … 1400 mcd

Approvals

Approbations
CCC
CSA
UL

Declaration of conformity
CE

EAO reserves the right to alter specifications without further notice.

Inscription marking plates and legend plates

Labels can be inserted for identification pusposes in illuminated pushbuttons and pushbuttons with a flat lens. This marking plates are made of translucent plastic with a black inscription, which can be fitted in any 90° angle.

Standard texts for marking plates

Example	Start	Part No. 45-563.0K00.T00029

Standard texts German		Standard texts English	
Ein	Part No. 45-563.0K00.T00001	On	Part No. 45-563.0K00.T00020
Aus	Part No. 45-563.0K00.T00002	Off	Part No. 45-563.0K00.T00021
Auf	Part No. 45-563.0K00.T00003	Up	Part No. 45-563.0K00.T00022
Ab	Part No. 45-563.0K00.T00004	Down	Part No. 45-563.0K00.T00023
Vor	Part No. 45-563.0K00.T00005	Forward	Part No. 45-563.0K00.T00024
Zurück	Part No. 45-563.0K00.T00006	Right	Part No. 45-563.0K00.T00026
Rechts	Part No. 45-563.0K00.T00007	Left	Part No. 45-563.0K00.T00027
Links	Part No. 45-563.0K00.T00008	Stop	Part No. 45-563.0K00.T00028
Halt	Part No. 45-563.0K00.T00009	Start	Part No. 45-563.0K00.T00029
Zu	Part No. 45-563.0K00.T00010	Reset	Part No. 45-563.0K00.T00030
Schnell	Part No. 45-563.0K00.T00011	Test	Part No. 45-563.0K00.T00031
Langsam	Part No. 45-563.0K00.T00012	Open	Part No. 45-563.0K00.T00032
Betrieb	Part No. 45-563.0K00.T00013	Close	Part No. 45-563.0K00.T00033
Störung	Part No. 45-563.0K00.T00014	Running	Part No. 45-563.0K00.T00035
Einrichten	Part No. 45-563.0K00.T00018	Fast	Part No. 45-563.0K00.T00044
		Slow	Part No. 45-563.0K00.T00045

Symbols for marking plates

Graphic symbols are according to ISO 7000 or IEC 60417.

O Part No. 45-563.0K00.S00001	Part No. 45-563.0K00.S00012 Decrease, Minus	Part No. 45-563.0K00.S00023 Unlock
I Part No. 45-563.0K00.S00002	Part No. 45-563.0K00.S00013 Electric motor	Part No. 45-563.0K00.S00024 Setting
II Part No. 45-563.0K00.S00003	Part No. 45-563.0K00.S00014 Horn	Part No. 45-563.0K00.S00025 On-Off momentary contact type
III Part No. 45-563.0K00.S00004	Part No. 45-563.0K00.S00015 Water tap	Part No. 45-563.0K00.S00026 Manual operating
Part No. 45-563.0K00.S00005 Arrow direction to right	Part No. 45-563.0K00.S00016 Pump	Part No. 45-563.0K00.S00027 Automatic cycle
Part No. 45-563.0K00.S00006 Arrow direction up	Part No. 45-563.0K00.S00017 Coolant pump	Part No. 45-563.0K00.S00028 Suction
Part No. 45-563.0K00.S00007 Clockwise rotation	Part No. 45-563.0K00.S00018 Lock, tighten	Part No. 45-563.0K00.S00029 Blowing
Part No. 45-563.0K00.S00008 Counterclockwise rotation	Part No. 45-563.0K00.S00019 Unlock, unclamp	
Part No. 45-563.0K00.S00009 Rapid traverse	Part No. 45-563.0K00.S00020 Brake	
Part No. 45-563.0K00.S00010 Feed	Part No. 45-563.0K00.S00021 Release brake	
Part No. 45-563.0K00.S00011 Increase, Plus	Part No. 45-563.0K00.S00022 Interlock	

Customized inscription for marking plates

All dimensions in mm

Height of letters	Number of lines	Number of letters per line (target value)		
h		b1	b2	b3
4	1	10	–	–
3	2	–	8	–
	3	10	–	6

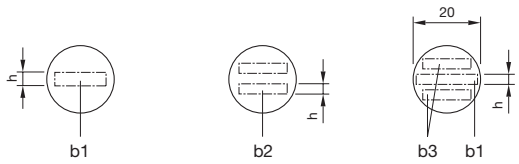

The gap between two words results in each case a letter less.

Standard texts for legend plates black, 27 x 12.5 mm

Example	Reset	Part No. 45-573.1102.T00030

Standard texts German		Standard texts English		Standard texts French	
Ein	Part No. 45-573.1102.T00001	On	Part No. 45-573.1102.T00020	Marche	Part No. 45-573.1102.T00048
Aus	Part No. 45-573.1102.T00002	Off	Part No. 45-573.1102.T00021	Arrêt	Part No. 45-573.1102.T00049
Auf	Part No. 45-573.1102.T00003	Up	Part No. 45-573.1102.T00022	Montée	Part No. 45-573.1102.T00050
Ab	Part No. 45-573.1102.T00004	Down	Part No. 45-573.1102.T00023	Descente	Part No. 45-573.1102.T00051
Vor	Part No. 45-573.1102.T00005	Forward	Part No. 45-573.1102.T00024	Avant	Part No. 45-573.1102.T00052
Zurück	Part No. 45-573.1102.T00006	Reverse	Part No. 45-573.1102.T00025	Retour	Part No. 45-573.1102.T00053
Rechts	Part No. 45-573.1102.T00007	Right	Part No. 45-573.1102.T00026	Droite	Part No. 45-573.1102.T00054
Links	Part No. 45-573.1102.T00008	Left	Part No. 45-573.1102.T00027	Gauche	Part No. 45-573.1102.T00055
Halt	Part No. 45-573.1102.T00009	Stop	Part No. 45-573.1102.T00028	Ouvert	Part No. 45-573.1102.T00056
Zu	Part No. 45-573.1102.T00010	Start	Part No. 45-573.1102.T00029	Fermé	Part No. 45-573.1102.T00057
Betrieb	Part No. 45-573.1102.T00013	Reset	Part No. 45-573.1102.T00030	Rapide	Part No. 45-573.1102.T00058
Störung	Part No. 45-573.1102.T00014	Test	Part No. 45-573.1102.T00031	En Service	Part No. 45-573.1102.T00059
Hand Auto	Part No. 45-573.1102.T00015	Open	Part No. 45-573.1102.T00032	Defaut	Part No. 45-573.1102.T00060
Hand O Auto	Part No. 45-573.1102.T00017	Close	Part No. 45-573.1102.T00033	Reglage	Part No. 45-573.1102.T00061
		Jog	Part No. 45-573.1102.T00034	Arrêt d`urgence	Part No. 45-573.1102.T00062
		Running	Part No. 45-573.1102.T00035	Hors service	Part No. 45-573.1102.T00063
		Fault	Part No. 45-573.1102.T00036	Sous tension	Part No. 45-573.1102.T00064
		Run	Part No. 45-573.1102.T00037	Manu Auto	Part No. 45-573.1102.T00065
		Stop Start	Part No. 45-573.1102.T00038	Marche Arrêt	Part No. 45-573.1102.T00066
		Off On	Part No. 45-573.1102.T00039	Rearmement	Part No. 45-573.1102.T00067
		Power off	Part No. 45-573.1102.T00040		
		Power on	Part No. 45-573.1102.T00041		
		Man O Auto	Part No. 45-573.1102.T00042		
		Man Auto	Part No. 45-573.1102.T00043		

Symbols for legend plates black, 27 x 12.5 mm

Graphic symbols are according to ISO 7000 or IEC 60417.

○	Part No. 45-573.1102.S00001	1 2	Part No. 45-573.1102.S00007
|	Part No. 45-573.1102.S00002	↑	Part No. 45-573.1102.S00009 Arrow/Direction up
○ |	Part No. 45-573.1102.S00005		

Standard texts for legend plates silver, 27 x 12.5 mm

Example	Reset	Part No. 45-573.1A02.T00030

Standard texts German		Standard texts English	
Ein	Part No. 45-573.1A02.T00001	On	Part No. 45-573.1A02.T00020
Aus	Part No. 45-573.1A02.T00002	Off	Part No. 45-573.1A02.T00021
Auf	Part No. 45-573.1A02.T00003	Up	Part No. 45-573.1A02.T00022
Ab	Part No. 45-573.1A02.T00004	Down	Part No. 45-573.1A02.T00023
Vor	Part No. 45-573.1A02.T00005	Stop	Part No. 45-573.1A02.T00028
Zurück	Part No. 45-573.1A02.T00006	Start	Part No. 45-573.1A02.T00029
Rechts	Part No. 45-573.1A02.T00007	Reset	Part No. 45-573.1A02.T00030
Links	Part No. 45-573.1A02.T00008	Test	Part No. 45-573.1A02.T00031
Halt	Part No. 45-573.1A02.T00009	Open	Part No. 45-573.1A02.T00032
Zu	Part No. 45-573.1A02.T00010	Close	Part No. 45-573.1A02.T00033
Schnell	Part No. 45-573.1A02.T00011	Man O Auto	Part No. 45-573.1A02.T00042
Langsam	Part No. 45-573.1A02.T00012	Man Auto	Part No. 45-573.1A02.T00043
Betrieb	Part No. 45-573.1A02.T00013	Running	Part No. 45-573.1A02.T00035
Störung	Part No. 45-573.1A02.T00014	Fault	Part No. 45-573.1A02.T00036
Hand Auto	Part No. 45-573.1A02.T00015	Fast	Part No. 45-573.1A02.T00044
Stop Start	Part No. 45-573.1A02.T00016	Slow	Part No. 45-573.1A02.T00045
Hand O Auto	Part No. 45-573.1A02.T00017		

Symbols for legend plates silver, 27 x 12.5 mm

Graphic symbols are according to ISO 7000 or IEC 60417.

○	Part No. 45-573.1A02.S00001	|○||	Part No. 45-573.1A02.S00006
|	Part No. 45-573.1A02.S00002	1 ○ 2	Part No. 45-573.1A02.S00007
||	Part No. 45-573.1A02.S00003	→	Part No. 45-573.1A02.S00008 Arrow/Direction right
|||	Part No. 45-573.1A02.S00004	↑	Part No. 45-573.1A02.S00009 Arrow/Direction up
○ |	Part No. 45-573.1A02.S00005		

Standard texts for legend plates black, 27 x 17.5 mm

Example	Stop	Part No. 45-573.1103.T00028

Standard texts German		Standard texts English		Standard texts French	
Ein	Part No. 45-573.1103.T00001	On	Part No. 45-573.1103.T00020	Marche	Part No. 45-573.1103.T00048
Aus	Part No. 45-573.1103.T00002	Off	Part No. 45-573.1103.T00021	Arrêt	Part No. 45-573.1103.T00049
Auf	Part No. 45-573.1103.T00003	Up	Part No. 45-573.1103.T00022	Droite	Part No. 45-573.1103.T00054
Ab	Part No. 45-573.1103.T00004	Down	Part No. 45-573.1103.T00023	Gauche	Part No. 45-573.1103.T00055
Vor	Part No. 45-573.1103.T00005	Forward	Part No. 45-573.1103.T00024	En Service	Part No. 45-573.1103.T00059
Zurück	Part No. 45-573.1103.T00006	Reverse	Part No. 45-573.1103.T00025	Defaut	Part No. 45-573.1103.T00060
Halt	Part No. 45-573.1103.T00009	Right	Part No. 45-573.1103.T00026	Sous tension	Part No. 45-573.1103.T00064
Zu	Part No. 45-573.1103.T00010	Stop	Part No. 45-573.1103.T00028	Manu Auto	Part No. 45-573.1103.T00065
Betrieb	Part No. 45-573.1103.T00011	Start	Part No. 45-573.1103.T00029	Marche Arrêt	Part No. 45-573.1103.T00066
Störung	Part No. 45-573.1103.T00014	Open	Part No. 45-573.1103.T00032	Rearmement	Part No. 45-573.0K00.T00067
Hand Auto	Part No. 45-573.1103.T00015	Close	Part No. 45-573.1103.T00033		
		Running	Part No. 45-573.1103.T00035		
		Fault	Part No. 45-573.1103.T00036		
		Stop Start	Part No. 45-573.1103.T00038		
		Man Auto	Part No. 45-573.1103.T00043		

Symbols for legend plates black, 27 x 12.5 mm

Graphic symbols are according to ISO 7000 or IEC 60417.

	Part No. 45-573.1103.S00001		Part No. 45-573.1103.S00008 Arrow/Direction right
	Part No. 45-573.1103.S00002		Part No. 45-573.1103.S00009 Arrow/Direction up
	Part No. 45-573.1103.S00005		

Standard texts for legend plates silver, 27 x 17.5 mm

Example	Stop	Part No. 45-573.1A03.T00028

Standard texts German		Standard texts English	
Ein	Part No. 45-573.1A03.T00001	On	Part No. 45-573.1A03.T00020
Aus	Part No. 45-573.1A03.T00002	Off	Part No. 45-573.1A03.T00021
Auf	Part No. 45-573.1A03.T00003	Stop	Part No. 45-573.1A03.T00028
Ab	Part No. 45-573.1A03.T00004	Start	Part No. 45-573.1A03.T00029
Vor	Part No. 45-573.1A03.T00005	Reset	Part No. 45-573.1A03.T00030
Zurück	Part No. 45-573.1A03.T00006	Fault	Part No. 45-573.1A03.T00036
Rechts	Part No. 45-573.1A03.T00007	Man O Auto	Part No. 45-573.1A03.T00043
Halt	Part No. 45-573.1A03.T00009		
Zu	Part No. 45-573.1A03.T00010		
Betrieb	Part No. 45-573.1A03.T00013		
Störung	Part No. 45-573.1A03.T00014		
Hand Auto	Part No. 45-573.1A03.T00015		
Hand O Auto	Part No. 45-573.1A03.T00017		

Symbols for legend plates silver, 27 x 17.5 mm

Graphic symbols are according to ISO 7000 or IEC 60417.

○	Part No. 45-573.1A02.S00001	1 ○ 2	Part No. 45-573.1A02.S00007
|	Part No. 45-573.1A02.S00002	→	Part No. 45-573.1A02.S00008 Arrow/Direction right
○ |	Part No. 45-573.1A02.S00005	↑	Part No. 45-573.1A02.S00009 Arrow/Direction up

Standard texts for legend plates black, 27 x 27 mm

Example	Stop	Part No. 45-573.1103.T00028

Standard texts German		Standard texts English		Standard texts French	
Ein	Part No. 45-573.1105.T00001	On	Part No. 45-573.1105.T00020	Marche	Part No. 45-573.1105.T00048
Aus	Part No. 45-573.1105.T00002	Off	Part No. 45-573.1105.T00021	Arrêt	Part No. 45-573.1105.T00049
Auf	Part No. 45-573.1105.T00003	Up	Part No. 45-573.1105.T00022	Montée	Part No. 45-573.1105.T00050
Ab	Part No. 45-573.1105.T00004	Down	Part No. 45-573.1105.T00023	Descente	Part No. 45-573.1105.T00051
Vor	Part No. 45-573.1105.T00005	Forward	Part No. 45-573.1105.T00024	En Service	Part No. 45-573.1105.T00059
Zurück	Part No. 45-573.1105.T00006	Reverse	Part No. 45-573.1105.T00025	Defaut	Part No. 45-573.1105.T00060
Rechts	Part No. 45-573.1105.T00007	Stop	Part No. 45-573.1105.T00028	Sous tension	Part No. 45-573.1105.T00064
Links	Part No. 45-573.1105.T00008	Start	Part No. 45-573.1105.T00029	Manu Auto	Part No. 45-573.1105.T00065
Halt	Part No. 45-573.1105.T00009	Stop Start	Part No. 45-573.1105.T00038	Marche Arrêt	Part No. 45-573.1105.T00066
Zu	Part No. 45-573.1105.T00010	EMERGENCY STOP	Part No. 45-573.1105.T00046		
Betrieb	Part No. 45-573.1105.T00013				
Störung	Part No. 45-573.1105.T00014				
Hand Auto	Part No. 45-573.1105.T00015				

Symbols for legend plates black, 27 x 27 mm

Graphic symbols are according to ISO 7000 or IEC 60417.

	Part No. 45-573.1105.S00003		Part No. 45-573.1105.S00008 Arrow/Direction right

Customized inscription for legend plates

All dimensionen in mm

Size of legend plates	Height of letters	Number of lines
27 x 12.5	4	1
	3.5	2
	2.5	3
27 x 17.5	4	1 – 2
	3	3
27 x 27	4	1 – 5

Up to 11 characters per line are possible.

01
02
03
04
09
14
17
18
19
22
31
41
45
51
56
57
61
70
71
82
84
92
96

Suppressor circuits

When switching inductive loads such as relays, DC motors, and DC solenoids, it is always important to absorb surges (e. g. with a diode) to protect the contacts. When these inductive loads are switched off, a counter emf can severely damage switch contacts and greatly shorten lifetime.

Fig. 1 shows an inductive load with a free-wheeling diode connected in parallel. This free-wheeling diode provides a path for the inductor current to flow when the current is interrupted by the switch. Without this free-wheeling diode, the voltage across the coil will be limited only by dielectric breakdown voltages of the circuit or parasitic elements of the coil. This voltage can be kilovolts in amplitude even when nominal circuit voltages are low (e. g. 12 VDC) see Fig. 2.

The free-wheeling diode should be chosen so that the reverse breakdown voltage is greater than the voltage driving the inductive load. The DC blocking voltage (VR) of the free-wheeling diode can be found in the datasheet of a diode. The forward current should be equal or greater than the maximum current flowing through the load.

To get an efficient protection, the free-wheeling diode must be connected as close as possible to the inductive load!

Switching with inductive load
Fig. 1

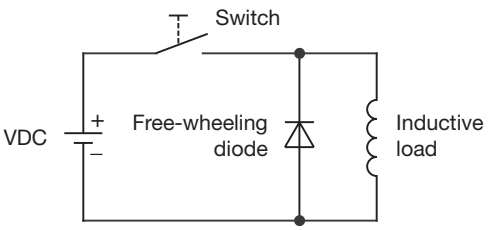
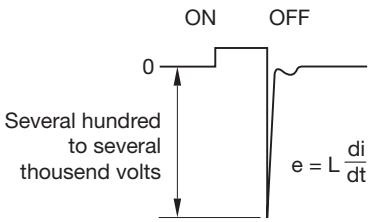
Counter EMF
over load without free-wheeling diode
Fig. 2