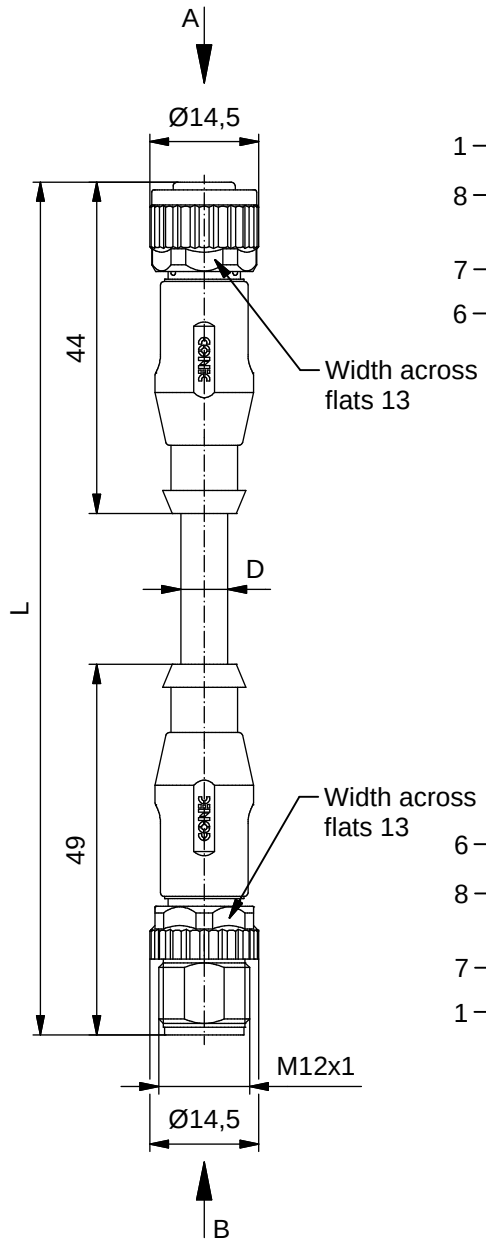

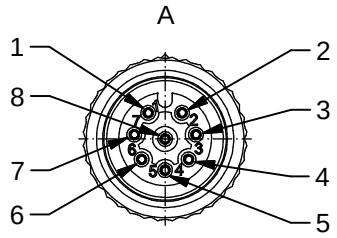

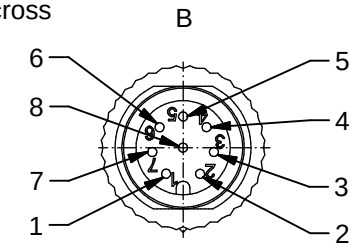

Technical specification:

Rated voltage: IEC 61076-2-101	8pos 30 V
Current rating: IEC 61076-2-101	2 A at 40℃
Insulation resistance: IEC 60512	>=100 MΩ
Pollution degree: IEC 60664-1	3/2
Degree of protection: IEC 60529	IP 67, in mated condition
Temperature range: IEC 60664-1	-30℃ ... +80℃
Mating cycles: IEC 60512-9a	>=100

Materials:

Contact:	CuZn
Contact plating:	Nickel, gold plated
Contact carrier:	TPU GF, UL 94
Sealing:	FPM
Coupling nut/ screw:	GD-Zn, nickel plated
Moulding body:	TPU, UL 94, grey

Installation specification:

Recommended torque:	0,6 Nm
Conec installation tool:	Torque wrench: 36-000200 Insert across flats 13: 36-000220

Contact assignment:

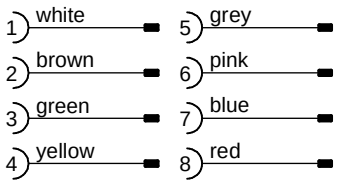

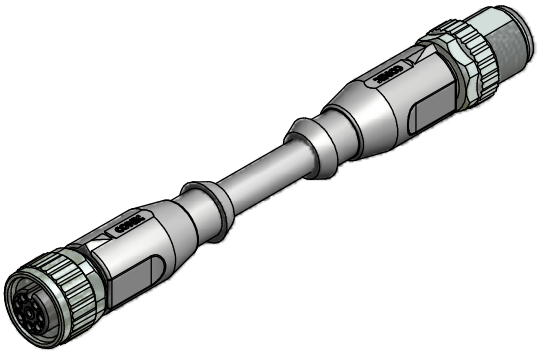

D see data sheet cable

Part no:	Description:	Length L:	Cable:
43-10596	SAL - 12 - RK8 - RS8 - 0,3 / A1	0,3m	PVC, grey, 8x0,25mm² Cable: 781-A12800
43-10597	SAL - 12 - RK8 - RS8 - 0,6 / A1	0,6m	
43-10598	SAL - 12 - RK8 - RS8 - 1,5 / A1	1,5m	
43-10599	SAL - 12 - RK8 - RS8 - 3,0 / A1	3m	
43-xxxxx	SAL - 12 - RK8 - RS8 - ... / A1	x	

DO NOT ALTER CAD DRAWING BY HAND

Directive 2002/95/EC RoHS compliant

Index: a 26.01.2011 VF Ä3767
Coupling nut/screw modified, spanner flats added, data sheet modified

dim. in mm

	date	name
drawn	08.03.07	Fromm
appd.	08.03.07	Mankopf

tolerance of cable: L <= 4m: L + 40mm
L > 4m: L + 1%

THIS DRAWING MAY NOT BE COPIED OR REPRODUCED IN ANY WAY, AND MAY NOT BE PASSED ON TO A THIRD PARTY WITHOUT WRITTEN PERMISSION.
OWNERSHIP AND COPYRIGHT OF CONEC GmbH

title:
Connecting cable M12x1, female connector axial - male connector axial

dwg no:
43K1A223

part no: see table