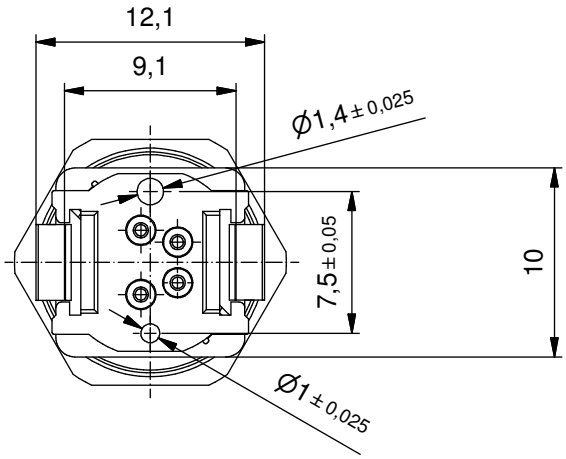

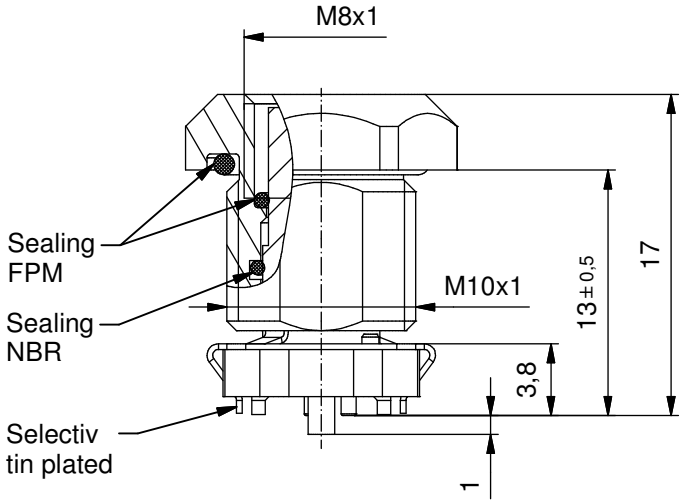

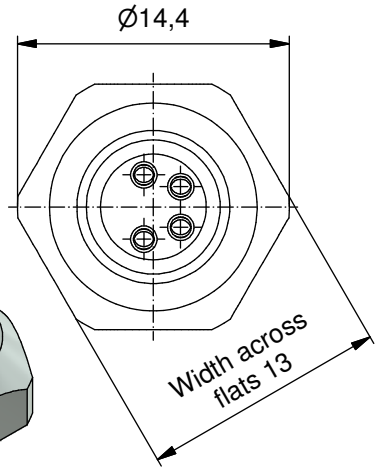

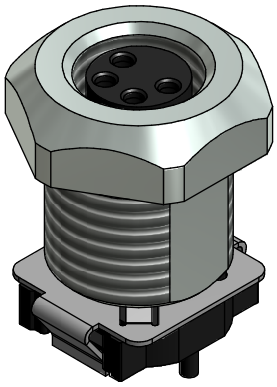

Technical specification:

Rated voltage: IEC 61076-2-104	50 V AC / 60 V DC
Current rating: IEC 61076-2-104	4 A at 40°C
Insulation resistance: IEC 60512	>=100 MΩ
Pollution degree: IEC 60664-1	3/2
Degree of protection: IEC 60529	IP 67, in mated condition
Temperature range: EN 60512-11-10 EN 60512-11-4	-25°C ... +95°C -40°C -40°C ... +85°C
Mating cycles: IEC 60512-9a	>=100

Materials:

Contact:	CuZn, Ni b / Au 0,2 gal.
Contact carrier:	LCP GF, UL 94 V-0
Shroud:	CuSn, nickel /sel. tin plated
Sealing:	FPM, NBR
Socket housing:	CuZn, Ni

Suitable for reflow soldering
max. 60s / 250°C

Coplanarity of all contacts and
soldering sheets max 0,1mm

Installation specification:

Recommended torque:	1-1,2 Nm
Conec installation tool:	Torque wrench: 36-000200 Insert across flats 13: 36-000220
Installation hole:	See fig.1 42K1A1119

Layout proposal

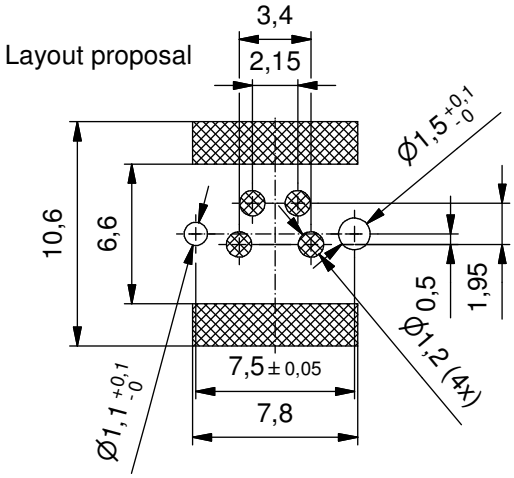

Part no. packing unit Tape & Reel:	Part no. packing unit in bulk:	Description:	Pos
42-01250TR	42-01250	SAL - 8S - FK4 - X13 / SMT	4

DO NOT ALTER CAD DRAWING BY HAND

RoHS & REACH compliant

Index a: 31.03.16 rbo Ä6018

Data sheet modified, counter nut and soldering sheet deleted, details of contact carrier added

dim. in mm

	date	name
drawn	23.02.15	Gitinow
appd.	17.03.15	Schramm

title: Female socket M8x1 SMT, geschirmt, frontmounting

dwg no: 42K1A776

part no: see table

general tolerance:

0	± 0,50mm
0,0	± 0,25mm
0,00	± 0,10mm
∡	± 5°

THIS DRAWING MAY NOT BE COPIED OR REPRODUCED IN ANY WAY, AND MAY NOT BE PASSED ON TO A THIRD PARTY WITHOUT WRITTEN PERMISSION. OWNERSHIP AND COPYRIGHT OF CONEC GmbH