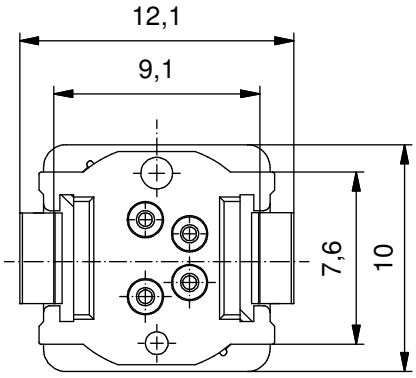

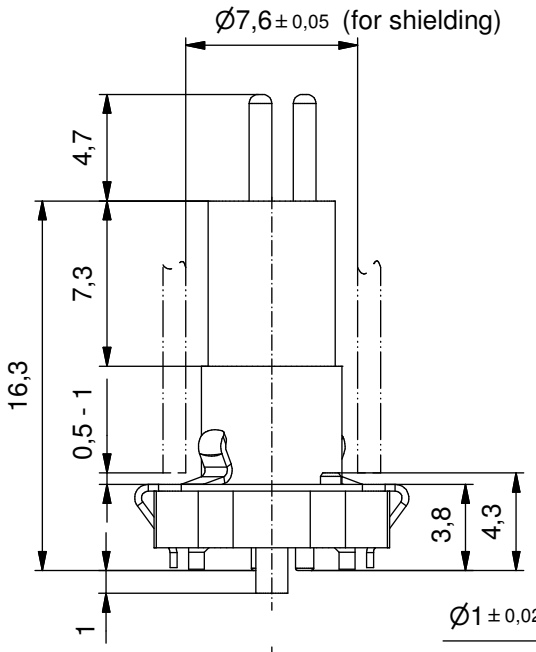

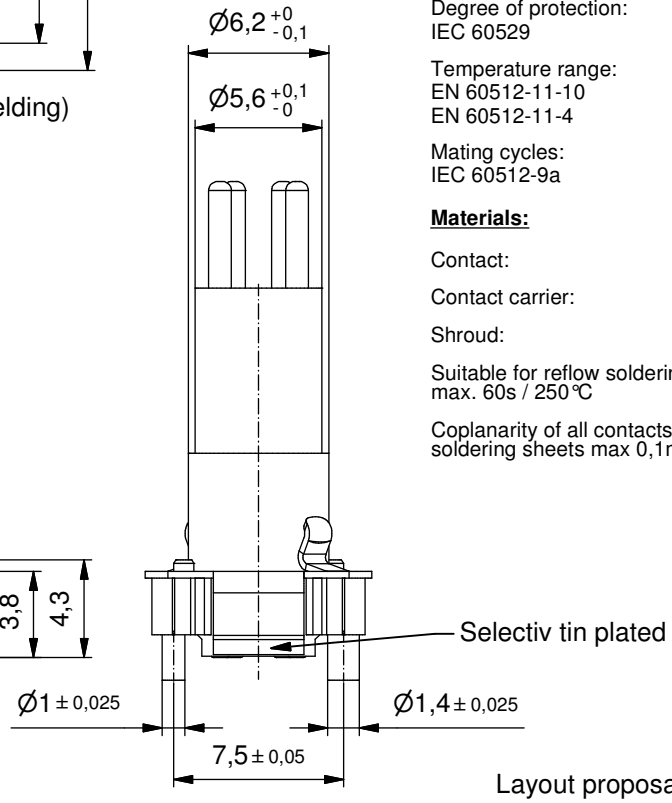

Technical specification:

Rated voltage: IEC 61076-2-104	50 V AC / 60 V DC
Current rating: IEC 61076-2-104	4 A at 40°C
Insulation resistance: IEC 60512	>=100 MΩ
Pollution degree: IEC 60664-1	3
Degree of protection: IEC 60529	IP 67, in mated condition
Temperature range: EN 60512-11-10 EN 60512-11-4	-25°C ... +95°C -40°C -40°C ... +85°C
Mating cycles: IEC 60512-9a	>=100

Materials:

Contact:	CuZn, Ni b / Au 0,2 gal.
Contact carrier:	LCP GF, UL 94 V-0
Shroud:	CuSn, nickel / sel. tin plated

Suitable for reflow soldering
max. 60s / 250°C

Coplanarity of all contacts and
soldering sheets max 0,1mm

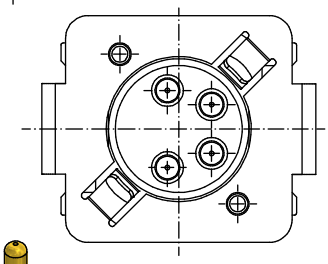

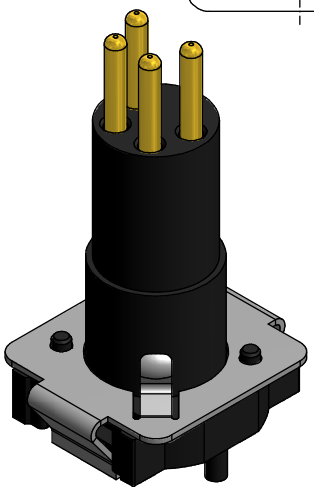

Layout proposal

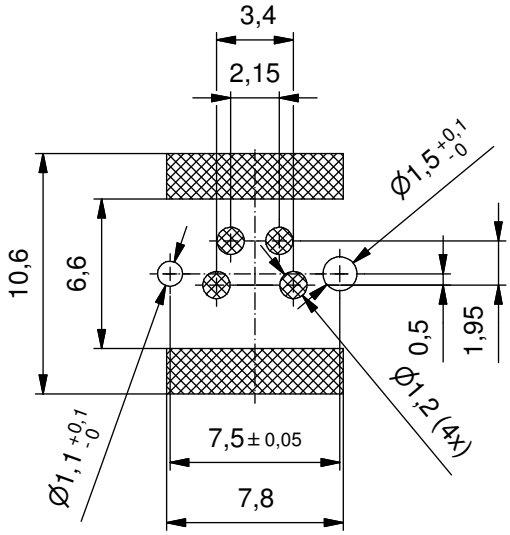

Part no. packing unit Tape & Reel:	Part no. packing unit in bulk:	Description:	Pos
42-01220TR	42-01220	SAL - 8S - IS4 / SMT	4

DO NOT ALTER CAD DRAWING BY HAND

RoHS & REACH compliant

Index: a 04.04.16 KHÄ6018

Marking in mating face removed, contact carrier: material information extended, soldering sheet removed

dim. in mm

	date	name
drawn	18.02.15	Gitinow
appd.	16.03.15	Schramm

title:

Insulating body male M8x1 SMT, shielded

dwg no:

42K1A746

part no: see table

general tolerance:

0	± 0,50mm
0,0	± 0,25mm
0,00	± 0,10mm
∡	± 5°

THIS DRAWING MAY NOT BE COPIED OR REPRODUCED IN ANY WAY, AND MAY NOT BE PASSED ON TO A THIRD PARTY WITHOUT WRITTEN PERMISSION. OWNERSHIP AND COPYRIGHT OF CONEC GmbH