5-1617514-5 ✔ ACTIVE

TE Internal #: 5-1617514-5

TE Internal Description: 3SAT1354A2=M5757/13-137

Mil-Spec: [M5757/13-137]

View on TE.com >

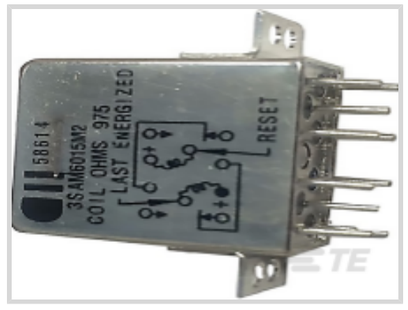

Product Compliance

For compliance documentation, visit the product page on TE.com>

EU RoHS Directive 2011/65/EU	Compliant
EU ELV Directive 2000/53/EC	Not Compliant
China RoHS 2 Directive MIIT Order No 32, 2016	有害物质含量符合标准要求 No Restricted Substance(s) Above Threshold
EU REACH Regulation (EC) No. 1907/2006	Current ECHA Candidate List: JUNE 2025 (250) Candidate List Declared Against: JAN 2024 (240) Does not contain REACH SVHC
Halogen Content	Low Halogen - Br, Cl, F < 900 ppm per homogenous material. Also BFR/CFR/PVC Free
Solder Process Capability	Not lead free process capable

Product Compliance Disclaimer

This information is provided based on reasonable inquiry of our suppliers and represents our current actual knowledge based on the information they provided. This information is subject to change. The part numbers that TE has identified as EU RoHS compliant have a maximum concentration of 0.1% by weight in homogenous materials for lead, hexavalent chromium, mercury, PBB, PBDE, DBP, BBP, DEHP, DIBP, and 0.01% for cadmium, or qualify for an exemption to these limits as defined in the Annexes of Directive 2011/65/EU (RoHS2). Finished electrical and electronic equipment products will be CE marked as required by Directive 2011/65/EU. Components may not be CE marked.Additionally, the part numbers that TE has identified as EU ELV compliant have a maximum concentration of 0.1% by weight in homogenous materials for lead, hexavalent chromium, and mercury, and 0.01% for cadmium, or qualify for an exemption to these limits as defined in the Annexes of Directive 2000/53/EC (ELV). Regarding the REACH Regulations, TE's information on SVHC in articles for this part number is still based on the European Chemical Agency (ECHA) 'Guidance on requirements for substances in articles'(Version: 2, April 2011), applying the 0.1% weight on weight concentration threshold at the finished product level. TE is aware of the European Court of Justice ruling of September 10th, 2015 also known as O5A (Once An Article Always An Article) stating that, in case of 'complex object', the threshold for a SVHC must be applied to both the product as a whole and simultaneously to each of the articles forming part of its composition. TE has evaluated this ruling based on the new ECHA "Guidance on requirements for substances in articles" (June 2017, version 4.0) and will be updating its statements accordingly.

Compatible Parts



TE Part # 1-1617122-5
JMACD-26XP = M39016/15-081P

Customers Also Bought

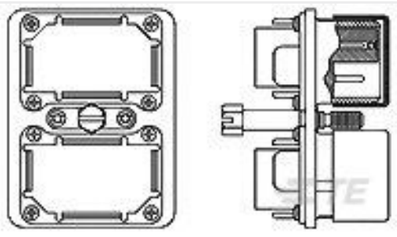

TE Part #207596-9
CONNECTOR, RME2P



TE Part #4-1617004-4
B07D932BZ2-0358 = M5757/23-042

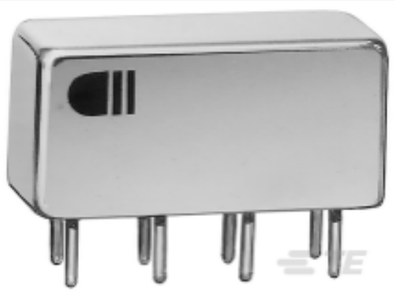

TE Part #3-1617073-7
3SBC2095A2 = M39016/37-025P

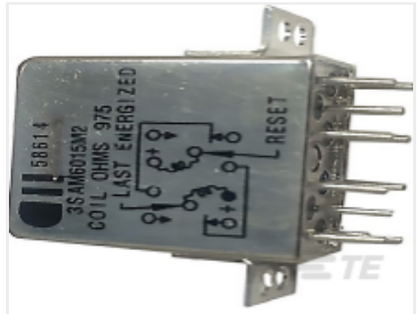

TE Part #1-1617088-7
3SAM1824A2 = M39016/32-006



TE Part #6-1617090-0
LS-9523M = DPDT LATCHING RELAY



TE Part #1617167-6
JMSCDD-26XP = M39016/21-038P



TE Part #1617354-8
JMACDG-26XL=M39016/15-093L



TE Part #6-1617540-1
J1MACT-18XP=M28776/5-029P

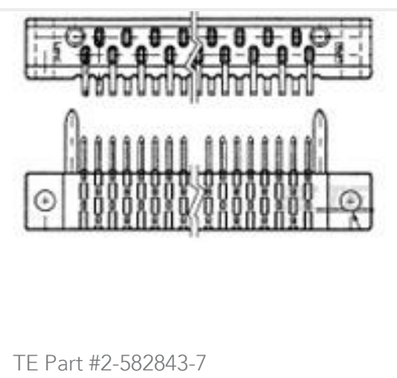

TE Part #2-582843-7
29 AMP BLADE HDR ASSY/MIL

Documents

Product Drawings

3SAT1354A2=M5757/13-137

English

Datasheets & Catalog Pages

RELAY

English