Open Type Trimmer

Model 37

Features:

- 9 mm single turn
- Open frame
- Cermet
- RoHS compliant

Model Styles Available

Top Adjust (with extension)	37F
Top Adjust	37P
Side Adjust	37W
Side Adjust (with extension)	37S

Electrical

Resistance Range	100 to 1,000,000 Ohms
Standard Resistance Tolerance	± 20%
Input Voltage, Maximum	250 V
Power rating, Watts	0.5 @ 70°C
End Resistance, Maximum	<500 ohms: 10 Ohms Max; > 500 ohms: 2% Max.
Actual Electrical Travel	280° ±15°
Insulation Resistance, Minimum	100 Megohms
Resolution	Essentially infinite
Contact Resistance Variation	5% Max.
Temperature Coefficient of Resistance	±250 ppm/°C

Mechanical

Torque, Maximum	4.5 in. oz.
Weight, Approx.	0.01 oz.
Wiper Position	Approx. 50%

General Note
TT Electronics reserves the right to make changes in product specification without notice or liability. All information is subject to TT Electronics' own data and is considered accurate at time of going to print.

© TT electronics plc

TT Electronics | BI Technologies
413 Rood RD, Suite 7
Calexico, CA 92231
Ph: + 1 (714) 447-2345
www.ttelectronics.com/bi-technologies

Open Type Trimmer

Model 37

Environmental

Operating Temperature Range	-30°C to +100°C
Rotational Life, 50 Cycles	±10% ΔR
Load Life, 0.5W, 500 Hours, 70°C	±5% ΔR
Resistance to Solder Heat	260°C for 3 sec.
Aqueous cleaning not recommended	

Ordering Information

37 P R10K LF

Model Series

Style F, P, W, S

Std. Package 500 pc/bag

RoHS Compliant Product Code

Resistance Value (see tables below)

Circuit Diagram

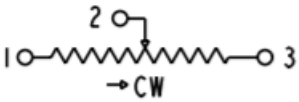

Standard Resistance Values, Ohms

Resistance (ohms)	Part Marking
100	101
200	201
500	501
1K	102
2K	202
5K	502
10K	103
20K	203
50K	503
100K	104
200K	204
500K	504
1MEG	105

General Note
TT Electronics reserves the right to make changes in product specification without notice or liability. All information is subject to TT Electronics' own data and is considered accurate at time of going to print.

© TT electronics plc

TT Electronics | BI Technologies
413 Rood RD, Suite 7
Calexico, CA 92231
Ph: + 1 (714) 447-2345
www.ttelectronics.com/bi-technologies

Outline Drawings

Model 37F (Top Adjust with extension)

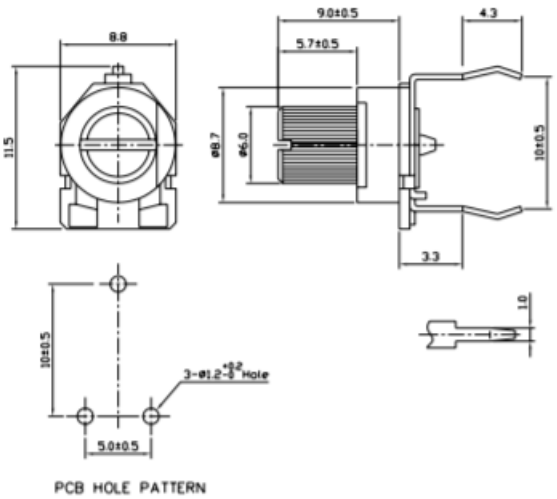

PCB HOLE PATTERN

Model 37P (Top Adjust)

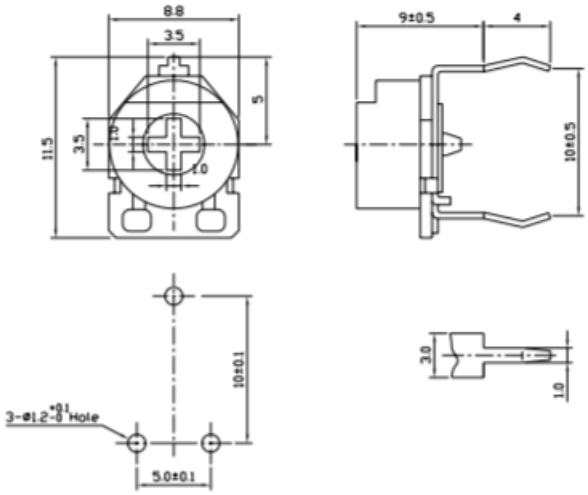

PCB HOLE PATTERN

Model 37W (Side Adjust)

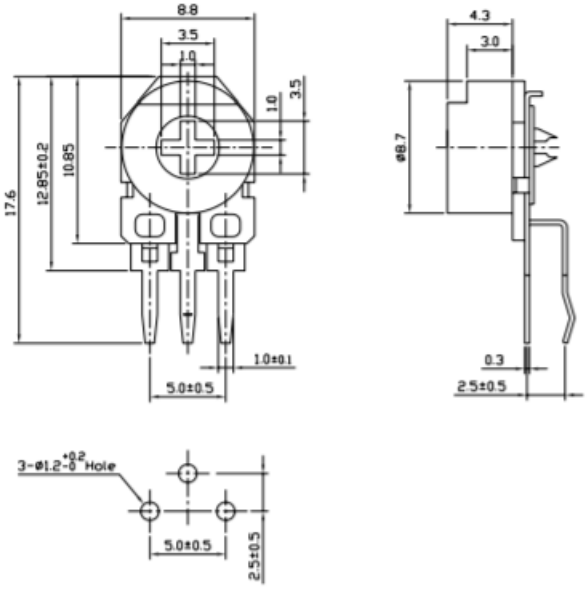

PCB HOLE PATTERN

Model 37S (Side Adjust with extension)

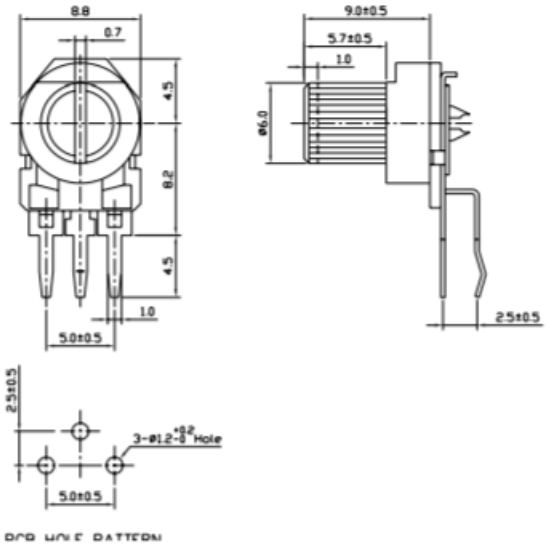

PCB HOLE PATTERN

General Note
TT Electronics reserves the right to make changes in product specification without notice or liability. All information is subject to TT Electronics' own data and is considered accurate at time of going to print.

© TT electronics plc

TT Electronics | BI Technologies
413 Rood RD, Suite 7
Calexico, CA 92231
Ph: + 1 (714) 447-2345
www.ttelectronics.com/bi-technologies