PRECISION & HIGH RELIABILITY THERMOSTATS

009048
Issue 5

DESCRIPTION

Thermostats can provide either temperature control or over-temperature protection by breaking electrical contact when a specified temperature is reached.

Honeywell manufactures a wide range of thermostats for a variety of potential applications:

- Precision non-hermetic and hermetically-sealed versions designed to serve infotech, transportation, telecom, industrial, aircraft, medical equipment, radar, communications, and electronic control systems needs.
- High reliability military and aerospace versions that meet the unique needs of the military, aerospace and aviation industries.

Honeywell can also integrate these thermostats in higher-value cable assemblies, incorporating wire harness and connectors. Also available is a selection of pre-configured REDI-TEMP Thermostats.

TABLE OF CONTENTS

Subject	Page Number
DESCRIPTION	1
NOMENCLATURE	2
DEFINITION OF TERMS, NOTES	3
PRECISION THERMOSTATS	
3001/3004 Series Non-Hermetic	4-5
3150 Series Low Profile Hermetic	6-7
3156 Series Low Level/Low Profile Hermetic	8-9
3100 Series Hermetic	10-11
3106 Series Low Level Hermetic	12-13
3800 Series Industrial Grade for Severe Duty	14-15
HIGH RELIABILITY MILITARY AND AEROSPACE THERMOSTATS	
Performance Qualifications, Applications	16
3153 Series Low Profile	17-18
3500 Series Military	19-20
3000 Series Custom Packaged	21
3MS1 QPL Series Military	22-23
3200 Series High Reliability	24-25
MOUNTING HARDWARE	
Brackets, studs and terminations	26-31
REDI-TEMP THERMOSTATS	
3100U REDI-TEMP Series	32

Honeywell

PRECISION AND HIGH RELIABILITY THERMOSTATS

NOMENCLATURE

The nomenclature given in Figures 1 and 2 is provided for reference only.

Figure 1. Precision Thermostat Nomenclature

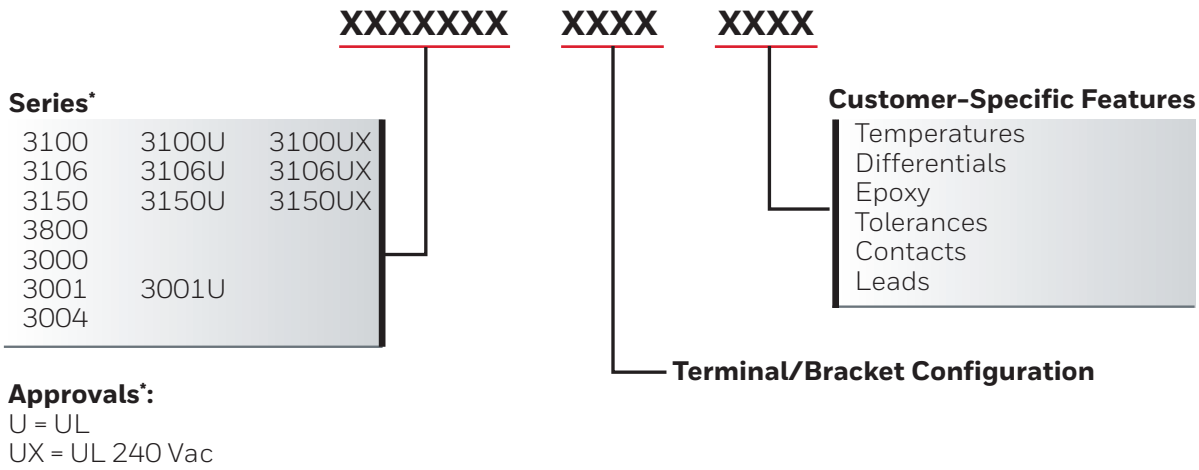

Approvals*:
U = UL
UX = UL 240 Vac

*Some series may be UL/CSA approved even if there is no separate catalog listing. See series pages for individual product information.

Figure 2. High Reliability Military and Aerospace Thermostat Nomenclature

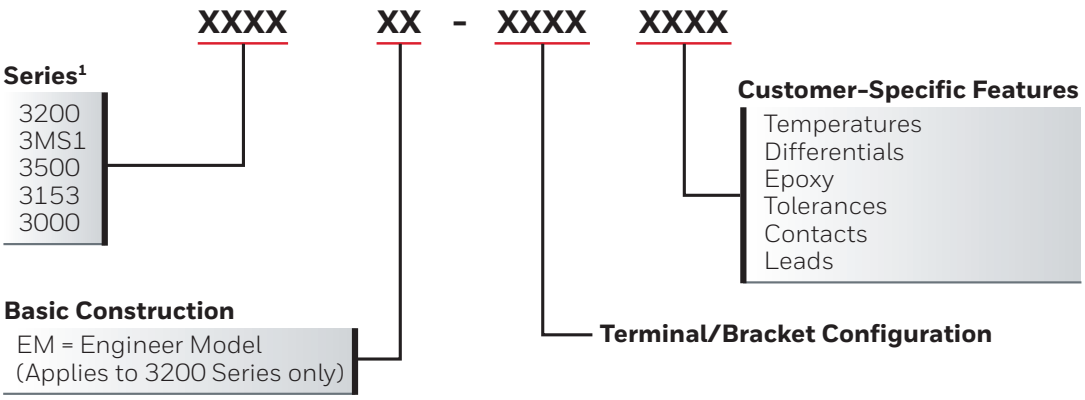

PRECISION AND HIGH RELIABILITY THERMOSTATS

DEFINITION OF TERMS

- **Automatic Reset:** A type of thermostat that will automatically reset at a specific temperature (i.e. a thermostat operates at 65,5°C [150°F] and resets at 48,89°C [120°F]).
- **Bimetal:** Two dissimilar metals bonded together to form the material for manufacturing thermally-sensitive discs which actuate the thermostat.
- **Close on Rise (COR):** Refers to operation of the contacts. When the temperature rises to its set point, the contacts close or make contact and complete the circuit.
- **Contact Resistance:** The value of resistance measured between the terminals.
- **Dielectric Strength:** The value of insulation between two electrically conducting parts. It may be tested by the application of a predetermined overvoltage for a specified time.
- **Differential:** The temperature difference between the operate and reset set points, also known as operate and reset.
  - **Nominal:** The temperature difference between nominal set points regardless of tolerance.
  - **Maximum:** The temperature difference between the operate and reset points.
  - **Minimum:** Minimum number of degrees between actual open and closing set points.
- **Exposure Temperature:** Thermal environment of a device during application operation.
- **FLA (Full Load Amps):** Current taken from the line by the motor when the motor is yielding the rated hp at the rated voltage and frequency.
- **Life Cycles:** The endurance rating of the thermostat expressed in number of operations with stated electrical load applied. Temperature limit application = open or rise.
- **LRA (Locked Rotor Amps):** The amount of current the motor can be expected to draw under starting conditions when full voltage is applied, also known as starting inrush current.
- **Manual Reset:** A bimetal thermostat with a reset button that must be pressed to reset the contacts.
- **Open on Rise (OOR):** Refers to the operation of contacts. When the temperature rises to its set point the contacts open, terminating the circuit.
- **Overmold:** Encapsulation with an insulating material.
- **Phenolic:** Thermoset plastic used for the insulating body of the thermostat.
- **Set Point:** The nominal temperature at which the thermostat operates.
- **SPST (Single Pole/Single Throw):** A switch with one current path which can be either open or closed.
- **Tolerance:** The allowable range above and below the set point temperature.
- **Operate:** Change of state when the thermostat reaches its set point.
- **Reset:** Change of state when the thermostat returns to its original condition prior to operation.

NOTES

- **Standard Temperature Characteristics Tables:**
  - **Temperatures:** Please consult applications engineering for temperature ranges, tolerances and differentials not noted. The operating temperature ranges include tolerances.
  - **Tolerances:** The ± tolerances given have been established after review of many thermostat applications. Attempts should be made to establish the widest acceptable tolerance possible.
- **UL and CSA Approvals:** 12,7 mm [0.5 in] thermostats are available with multiple agency approval for incorporation into equipment.
- **Fan Control Applications:** Require thermostat set points to be derated by 20°C from the equivalent temperature limit application. They also close on rise.
- **Low Power Applications:** For low power, low current applications, Honeywell is capable of supplying gold-flashed/plated contacts on the product families listed in this datasheet. Please contact the factory for details.

PRECISION AND HIGH RELIABILITY THERMOSTATS

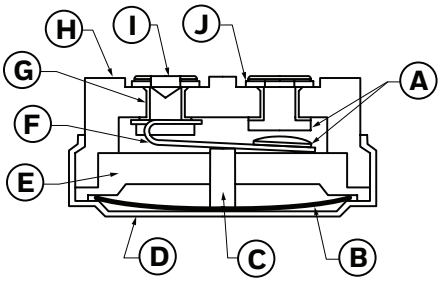

A Contacts
B Bimetal disc
C Ceramic transfer pin
D Metal closure
E Phenolic insulator
F Contact arm
G Metal sleeve (3004 only)
H Phenolic base
I Rivet (3004 only)
J Terminal

3001: Not UL/CSA approved
3001U Vac only: UL/CSA approved
3004 Vac and hp only: UL/CSA approved

POTENTIAL APPLICATIONS

- Computers
- Office equipment
- Blood analyzers

3001/3004 SERIES NON-HERMETIC THERMOSTATS

The 3001/3004 Series is a factory pre-set, single-pole, single-throw thermal switch available to open and close on temperature rise. The 3001 has a low-profile that allows it to be used in most applications where a non-hermetic precision thermostat is required for tight tolerances and the 3004 has a metal sleeve rivet construction. A metal closure makes the phenolic base dustproof and also provides thermal and electrical isolation for the silver contacts.

TABLE 1. 3001/3004 SERIES STANDARD OPERATING TEMPERATURE CHARACTERISTICS*

Operating Temperature Range	Tolerance		Standard Mean Differential °C [°F]	Optional Max. Differential °C [°F]
	Open °C [°F]	Close °C [°F]		
-17.8°C to 0°C [0°F to 31°F]	±3,9 [±7]	±5,0 [±9]	16,7 to 33,3 [30 to 60]	–
	±3,3 [±6]	±3,9 [±7]	8,3 to 16,1 [15 to 29]	–
0°C to 26.1°C [32°F to 79°F]	±3,3 [±6]	±4,4 [±8]	16,7 to 33,3 [30 to 60]	–
	±2,8 [±5]	±3,9 [±7]	8,3 to 16,1 [15 to 29]	–
	±2,8 [±5]	±2,8 [±5]	5,6 to 7,8 [10 to 14]	–
26.7°C to 93.3°C [80°F to 200°F]	±2,8 [±5]	±3,9 [±7]	16,7 to 33,3 [30 to 60]	–
	±2,8 [±5]	±3,3 [±6]	8,3 to 16,1 [15 to 29]	–
	±2,8 [±5]	±2,8 [±5]	5,6 to 7,8 [10 to 14]	–
	±2,8 [±5]	–	–	5,6 [10]
	–	±2,8 [±5]	–	5,6 [10]
	±2,2 [±4]	–	–	4,4 [8]
	-	±2,2 [±4]	–	4,4 [8]
93.9°C to 148.9°C [201°F to 300°F]	±3,9 [±7]	±4,4 [±8]	16,7 to 44,4 [30 to 80]	–
	±3,9 [±7]	±3,9 [±7]	13,9 to 16,1 [25 to 29]	–
	±3,3 [±6]	±3,9 [±7]	11,1 to 13,3 [20 to 24]	–
	±3,9 [±7]	–	–	8,3 [15]
	–	±3,9 [±7]	–	8,3 [15]
	±3,3 [±6]	–	–	6,7 [12]
	–	±3,3 [±6]	–	6,7 [12]
149.4°C to 168.3°C [301°F to 335°F]	±5,6 [±10]	±6,7 [±12]	22,2 to 44,5 [40 to 80]	–
	±5,6 [±10]	±5,6 [±10]	19,5 to 21,7 [35 to 39]	–
	±4,4 [±8]	±5,6 [±10]	13,9 to 16,1 [30 to 34]	–
	±5,6 [±10]	–	–	11,1 [20]
	–	±5,6 [±10]	–	11,1 [20]
	±4,4 [±8]	–	–	10,0 [18]
	–	±4,4 [±8]	–	10,0 [18]

**Operating temperatures are available in 5°C [8°F] increments between 40°C to 120°C [104°F to 248°F].*

TABLE 2. 3001/3004 SERIES SPECIFICATIONS

Characteristic	Parameter
Switch type	SPST
Reset type	automatic
Amperage	see Tables 3, 4, 5
Voltage	120 Vac (see Tables 3, 4, 5)
Operating temperature range	-17,8°C to 150°C [0°F to 302°F]
Environmental exposure range	-17,8°C to 177°C [0°F to 350°F]
Dielectric strength	MIL-STD-202 Method 301 3001: 1500 Vac 60 Hz, terminal to case 3004: 2000 Vac 60 Hz, terminal to case
Insulation resistance	MIL-STD-202 Method 302 Cond. B – 500 MOhm, 500 Vdc applied
Contact resistance	MIL-STD-202 Method 307 – 50 mOhm
Material: base contacts terminals closure brackets	 phenolic silver alloy plated brass or steel aluminum, stainless steel or brass stainless steel or brass
Approvals	UL File E36103, CSA File LR21048
Weight	4 g [0.14 oz] (brackets and wire leads not included)

TABLE 3. 3001 CONTACT RATINGS

Life Cycles	30 Vac/dc	120 Vac	240 Vac
5,000	7 A	6 A	3 A
10,000	6.5 A	5 A	2.5 A
25,000	6 A	4 A	2 A
50,000	5.5 A	3.3 A	1.5 A
100,000	5 A	2 A	1 A

TABLE 4. 3001U CONTACT RATINGS

Life Cycles	120 Vac	240 Vac	250 Vac
6,000	6 A	1.5 A[1]	1.5 A[1]
6,000	1/10 hp	–	–
100,000	3 A	–	–

[1] *CSA Rating*

TABLE 5. 3004 CONTACT RATINGS

Life Cycles	120 Vac	250 Vac
6,000	8 A[1,2]	4.0 A[1,2]
6,000	1/10 hp[1]	–
100,000	4.0 A[1]	2 A[1]

[1] *UL Rating*
[2] *CSA Rating*

PRECISION AND HIGH RELIABILITY THERMOSTATS

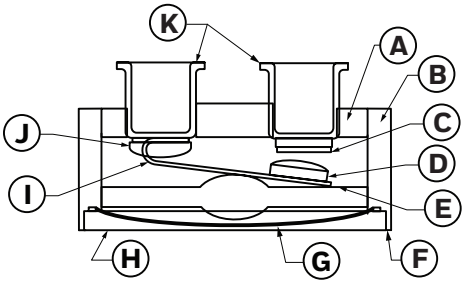

A Glass header
B Housing
C Contact
D Movable contact
E Actuator
F Laser weld
G Bimetal disc
H Cap
I Contact arm
J Weld cap
K Terminals

3150: Not UL approved
3150U 120 Vac max.: UL/CSA approved
3150UX 240 Vac max.: UL approved

POTENTIAL APPLICATIONS

- Office equipment
- Computers
- Aircraft
- Electronic controls

3150 SERIES LOW-PROFILE HERMETIC THERMOSTATS

The 3150 Series is a single-pole, single-throw switch activated by a snap-action bimetal disc. The case is laser welded to form a hermetically sealed steel housing, with a glass-to-metal seal at the terminal junction. The low profile and compact design allows it to be used in most applications that require miniaturization. Temperature calibrations are pre-set at the factory, and each unit is thermally and mechanically inspected. It is available to open or close on temperature rise. A variety of mounting brackets and terminals is available.

TABLE 6. 3150 SERIES STANDARD OPERATING TEMPERATURE CHARACTERISTICS

Operating Temperature Range	Tolerance		Standard Mean Differential °C [°F]	Optional Max. Differential °C [°F]
	Open °C [°F]	Close °C [°F]		
-28.89°C to 12.2°C [-20°F to 10°F]	±5,6 [±10]	±4,4 [±8]	16,7 to 22,2 [30 to 40]	–
	±4,4 [±8]	±4,4 [±8]	11,1 to 16,1 [20 to 29]	–
	±3,9 [±7]	±3,9 [±7]	7,8 to 10,6 [14 to 19]	–
-11.7°C to 107.2°C [11°F to 225°F]	±2,8 [±5]	±2,8 [±5]	11,1 to 44,4 [20 to 80]	–
	±2,8 [±5]	±2,8 [±5]	8,3 to 10,6 [15 to 19]	–
	±2,8 [±5]	±2,8 [±5]	5,6 to 7,8 [10 to 14]	–
	±2,2 [±4]	–	–	4,4 [8]
	–	±2,2 [±4]	–	4,4 [8]
	±1,7 [±3]	–	–	3,3 [6]
	–	±1,7 [±3]	–	3,3 [6]
107.8°C to 148.9°C [226°F to 300°F]	±4,4 [±8]	±3,3 [±6]	13,9 to 27,8 [25 to 50]	–
	±5,6 [±7]	±3,3 [±6]	8,3 to 13,3 [15 to 34]	–
	±3,3 [±6]	±3,3 [±6]	6,7 to 7,8 [12 to 14]	–
	±2,8 [±5]	–	–	6,7 [12]
	–	±2,8 [±5]	–	6,7 [12]
	±2,2 [±4]	–	–	4,4 [8]
	–	±2,2 [±4]	–	4,4 [8]
149.4°C to 176.7°C [301°F to 350°F]	±6,7 [±12]	±5,6 [±10]	19,5 to 27,8 [35 to 50]	–
	±5,6 [±10]	±5,6 [±10]	13,9 to 18,9 [25 to 34]	–
	±4,4 [±8]	±4,4 [±8]	8,3 to 13,3 [15 to 24]	–
	±3,9 [±7]	–	–	8,3 [15]
	–	±3,9 [±7]	–	8,3 [15]
	±2,8 [±5]	–	–	5,6 [10]
	–	±2,8 [±5]	–	5,6 [10]

TABLE 7. 3150 SERIES SPECIFICATIONS

Characteristic	Parameter
Switch type	SPST
Reset type	automatic
Amperage	see Tables 8, 9, 10
Voltage	120 Vac (see Tables 8, 9, 10)
Operating temp. range	-28.89°C to 177°C [-20°F to 350°F]
Environ. exposure range	-54°C to 260°C [-65°F to 500°F]
Dielectric strength	3150: MIL-STD-202 Method 301 – 750 Vac, 60 Hz terminal to case 3150U: MIL-STD-202 Method 301 – 1250 Vac, 60 Hz terminal to case 3150UX: MIL-STD-202 Method 301 – 1500 Vac, 60 Hz terminal to case
Insulation resistance	MIL-STD-202 Method 302 Cond. B: 50 MOhm, 500 Vdc applied
Contact resistance	MIL-STD-202, Method 307: 50 mOhm
Hermetic seal	MIL-STD-202, Method 112 Cond. $1x10^5$ Atm cc/sec
Moisture resistance	MIL-STD-202, Method 106
Material:*	
base	cold rolled plated steel
contacts	silver alloy
terminals	nickel/iron alloy
closure	hermetically sealed
brackets	cold rolled plated steel
plating	copper/nickel QQ-N-290
Marking	MIL-STD-1285
Approvals	UL File E36103, CSA File LR21048
Weight	5,0 g [0.17 oz] (brackets and wire leads not included)

**Value-added materials such as brackets and wires may affect operating temperature and environmental temperature ranges.*

TABLE 8. 3150 CONTACT RATINGS

Life Cycles	30 Vac/dc	120 Vac	240 Vac
5,000	6 A	6 A	1.5 A
10,000	4 A	4 A	1.25 A
25,000	3 A	3 A	1 A
50,000	2 A	2 A	1 A
100,000	2 A	2 A	1 A

TABLE 9. 3150U CONTACT RATINGS

Life Cycles	24 Vdc	120 Vac
6,000	–	3 A
6,000	–	1/10 hp
100,000	0.5 A	–

TABLE 10. 3150UX CONTACT RATINGS

Life Cycles	240 Vac
6,000	1.5 A
100,000	0.025 A

PRECISION AND HIGH RELIABILITY THERMOSTATS

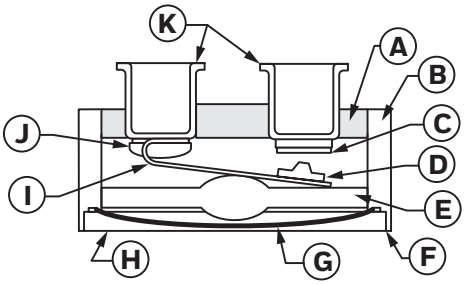

A Glass header
B Housing
C Contact
D Movable contact
E Actuator
F Laser weld
G Bimetallic disc
H Cap
I Contact arm
J Weld cap
K Terminals

3156: Not UL/CSA approved
3156U: UL/CSA approved

POTENTIAL APPLICATIONS

- Dry circuit applications where space is limited

3156 SERIES LOW-LEVEL, LOW PROFILE HERMETIC THERMOSTATS

The 3156 Series is a single-pole, single-throw switch activated by a snap-action bimetal disc. It has WE-1 gold alloy cross point contacts for use in potential low voltage applications The case is laser welded to form a hermetically-sealed steel housing, with glass-to-metal seal at the terminal junction. Its low silhouette and compact design allows use in most applications that require miniaturization. Temperature calibrations are pre-set at the factory and each unit is thermally and mechanically inspected. It is available to open or close on temperature rise. A variety of mounting brackets and terminals is available.

TABLE 11. 3156 SERIES STANDARD OPERATING TEMPERATURE CHARACTERISTICS

Operating Temperature Range	Tolerance		Standard Mean Differential °C [°F]	Optional Max. Differential °C [°F]
	Open °C [°F]	Close °C [°F]		
-28.89°C to -12.2°C [-20°F to 10°F]	±5,6 [±10]	±4,4 [±8]	16,7 to 22,2 [30 to 40]	–
	±4,4 [±8]	±4,4 [±8]	11,1 to 16,1 [20 to 29]	–
	±3,9 [±7]	±3,9 [±7]	7,8 to 10,6 [14 to 19]	–
-11.7°C to 107.2°C [11°F to 225°F]	±2,8 [±5]	±2,8 [±5]	11,1 to 44,4 [20 to 80]	–
	±2,8 [±5]	±2,8 [±5]	8,3 to 10,6 [15 to 19]	–
	±2,8 [±5]	±2,8 [±5]	5,6 to 7,8 [10 to 14]	–
	±2,2 [±4]	–	–	4,4 [8]
	–	±2,2 [±4]	–	4,4 [8]
	±1,7 [±3]	–	–	3,3 [6]
	–	±1,7 [±3]	–	3,3 [6]
107.8°C to 148.9°C [226°F to 300°F]	±4,4 [±8]	±3,3 [±6]	13,9 to 44,4 [25 to 80]	–
	±3,9 [±7]	±3,3 [±6]	8,3 to 13,3 [15 to 24]	–
	±3,3 [±6]	±3,3 [±6]	6,7 to 7,8 [12 to 14]	–
	±2,8 [±5]	–	–	6,7 [12]
	–	±2,8 [±5]	–	6,7 [12]
	±2,2 [±4]	–	–	4,4 [8]
	–	±2,2 [±4]	–	4,4 [8]
149.4°C to 176.7°C [301°F to 350°F]	±6,7 [±12]	±5,6 [±10]	19,5 to 27,8 [35 to 50]	–
	±5,6 [±10]	±5,6 [±10]	13,9 to 18,9 [25 to 34]	–
	±4,4 [±8]	±4,4 [±8]	8,3 to 13,3 [15 to 24]	–
	±3,9 [±7]	–	–	8,3 [15]
	–	±3,9 [±7]	–	8,3 [15]
	±2,8 [±5]	–	–	5,6 [10]
	–	±2,8 [±5]	–	5,6 [10]

TABLE 12. 3156 SERIES SPECIFICATIONS

Characteristic	Parameter
Switch type	SPST
Reset type	automatic
Amperage	500 mA (see Table 13)
Voltage	50 Vdc (see Table 13)
Operating temperature range	-28,89°C to 177°C [-20°F to 350°F]
Environmental exposure range	-54°C to 260°C [-65°F to 500°F]
Dielectric strength	3156: MIL-STD-202 Method 301 – 750 Vac, 60 Hz terminal to case 3156U: MIL-STD-202 Method 301 – 1250 Vac, 60 Hz terminal to case
Insulation resistance	MIL-STD-202 Method 302 Cond. B – 50 MOhm, 500 Vdc applied
Contact resistance	MIL-STD-202, Method 307 – 50 mOhm
Hermetic seal	MIL-STD-202, Method 112 Cond. $1x10^5$ Atm cc/sec
Moisture resistance	MIL-STD-202, Method 106
Material:*	
base	cold rolled plated steel
contacts	WE-1 gold alloy cross point
terminals	nickel/iron alloy
closure	hermetically sealed
brackets	cold rolled plated steel
plating	copper/nickel QQ-N-290
Marking	MIL-STD-1285
Approvals	UL File E36103, CSA File LR21048
Weight	5,0 g [0.17 oz] (brackets and wire leads not included)

**Value-added materials such as brackets and wires may affect operating temperature and environmental temperature ranges.*

TABLE 13. 3156 CONTACT RATINGS

Life Cycles	50 Vdc	120 Vac
100,000	500 mA	100 mA

PRECISION AND HIGH RELIABILITY THERMOSTATS

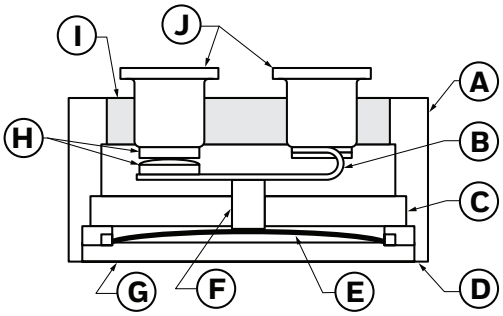

A Housing
B Contact arm
C Ceramic insulator
D Laser weld
E Bimetal disc
F Ceramic transfer pin
G Cap
H Contacts
I Glass header
J Terminals

3100 120 Vac max.: Not UL/CSA approved
3100U 120 V: UL approved
3100UX 240 V: UL/CSA approved

POTENTIAL APPLICATIONS

including high-temperature control for:

- Office equipment
- Computers
- Aircraft
- Electronic controls

3100 SERIES HERMETIC THERMOSTATS

The 3100 Series is a single-pole, single-throw switch activated by a snap-action bi-metal disc. The case is laser welded to form a hermetically-sealed steel housing, with a glass-to-metal seal at the terminal junction. Temperature calibrations are pre-set at the factory. Each unit is thermally and mechanically inspected and tamperproof. They are available to open or close on temperature rise. A variety of mounting brackets and terminals is available. Preconfigured REDI-TEMP versions are available. See page 33.

TABLE 14. 3100 SERIES STANDARD OPERATING TEMPERATURE CHARACTERISTICS

Operating Temperature Range	Tolerance		Standard Mean Differential °C [°F]	Optional Max. Differential °C [°F]
	Open °C [°F]	Close °C [°F]		
-28.89°C to -12.2°C [-20°F to 10°F]	±5,6 [±10]	±4,4 [±8]	16,7 to 22, 2 [30 to 40]	–
	±4,4 [±8]	±4,4 [±8]	11,1 to 16,1 [20 to 29]	–
	±3,9 [±7]	±3,9 [±7]	7,8 to 10,6 [14 to 19]	–
	±3,3 [±6]	–	–	4,4 [8]
	–	±3,3 [±6]	–	4,4 [8]
-11.7°C to 93.3°C [11°F to 200°F]	±2,8 [±5]	±2,8 [±5]	11,1 to 44,4 [20 to 80]	–
	±2,8 [±5]	±2,8 [±5]	8,3 to 10,6 [15 to 19]	–
	±2,8 [±5]	±2,8 [±5]	5,6 to 7,8 [10 to 14]	–
	±2,2 [±4]	–	–	4,4 [8]
	–	±2,2 [±4]	–	4,4 [8]
	±1,7 [±3]	–	–	3,3 [6]
	–	±1,7 [±3]	–	3,3 [6]
93.9°C to 148.9°C [201°F to 300°F]	±4,4 [±8]	±3,3, [±6]	13,9 to 44,4 [25 to 80]	–
	±3,9 [±7]	±3,3 [±6]	8,3 to 13,3 [15 to 24]	–
	±3,3 [±6]	±3,3 [±6]	6,7 to 7,8 [12 to 14]	–
	±2,8 [±5]	±2,8 [±5]	5,6 to 7,8 [10 to 14]	–
	±2,2 [±4]	–	–	4,4 [8]
	–	±2,2 [±4]	–	4,4 [8]
149.4°C to 176.7°C [301°F to 350°F]	±6,7 [±12]	±5,6 [±10]	19,4 to 44,4 [35 to 80]	–
	±5,6 [±10]	±5,6 [±10]	13,9 to 18,9 [25 to 34]	–
	±4,4 [±8]	±4,4 [±8]	8,9 to 13,3 [16 to 24]	–
	±3,9 [±7]	±3,9 [±7]	7,8 to 10,0 [14 to 18]	–
	±2,8 [±5]	–	–	5,6 [10]
	–	±2,8 [±5]	–	5,6 [10]
177.2°C to 204.4°C [351°F to 400°F]	±8,3 [±15]	±8,3 [±15]	22,2 to 55,6 [40 to 100]	–
	±8,3 [±15]	±6,7 [±12]	16,7 to 21,7 [30 to 39]	–
	±5,6 [±10]	±5,6 [±10]	11,1 to 16,1 [20 to 29]	–
	±4,4 [±8]	±4,4 [±8]	8,9 to 10,6 [16 to 19]	–
	±3,3 [±6]	–	–	8,3 [15]
	–	±3,3 [±6]	–	8,3 [15]
205°C to 232.20°C [401°F to 450°F]	±11,1 [±20]	±8,3 [±15]	22,2 to 55,6 [40 to 100]	–
232.8°C to 260°C [451°F to 500°F]	±13,9 [±25]	±13,9 [±25]	33,3 to 66,7 [60 to 120]	–

TABLE 15. 3100 SERIES SPECIFICATIONS

Characteristic	Parameter
Switch type	SPST
Reset type	automatic
Amperage	see Tables 16, 17, 18
Voltage	30 Vac/dc (see Tables 16, 17, 18)
Operating temp. range	-28.89°C to 260°C [-20°F to 500°F]
Environmental exposure range	-62°C to 288°C [-80°F to 550°F]
Dielectric strength	3100 and 3100U: MIL-STD-202 Method 301 – 1250 Vac, 60 Hz terminal to case 3100UX: MIL-STD-202 Method 301 – 1500 Vac, 60 Hz terminal to case
Insulation resistance	MIL-STD-202 Method 302 Cond. B – 50 MOhm, 500 Vdc applied
Contact resistance	MIL-STD-202, Method 307 – 50 mOhm
Hermetic seal	MIL-STD-202, Method 112 Cond. $1x10^5$ Atm cc/sec
Moisture resistance	MIL-STD-202, Method 106
Material:*	
base	cold rolled plated steel
contacts	silver
terminals	nickel/iron alloy
closure	hermetically sealed
brackets	cold rolled plated steel
plating	copper/nickel QQ-N-290
Marking	MIL-STD-1285
Approvals	3100U: UL File E36103
Weight	5,5 g [0.19 oz] (brackets and wire leads not included)

**Value-added materials such as brackets and wires may affect operating temperature and environmental temperature ranges.*

TABLE 16. 3100 CONTACT RATINGS

Life Cycles	30 Vac/dc	120 Vac	240 Vac
5,000	7 A	6 A	3 A
10,000	6.5 A	5 A	2.6 A
25,000	6 A	4 A	2 A
50,000	5.5 A	3 A	1.5 A
100,000	5 A	2 A	1 A

TABLE 17. 3100U CONTACT RATINGS

Life Cycles	120 Vac
6,000	6 A
6,000	1/10 hp
100,000	3 A
30,000	3 A
100,000	100 mA

TABLE 18. 3100UX CONTACT RATINGS

Life Cycles	240 Vac
6,000	1.5 A
6,000	–
100,000	0.025 A
30,000	–
100,000	–

See page 32 for a list of readily available offerings in the 3100U Redi-Temp family.

PRECISION AND HIGH RELIABILITY THERMOSTATS

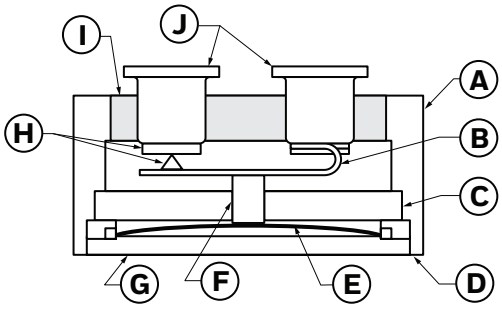

A Housing
B Contact arm
C Ceramic insulator
D Laser weld
E Bimetal disc
F Ceramic transfer pin
G Cap
H Gold-alloy contacts
I Glass header
J Terminals

3106: Not UL/CSA approved
3106U: UL/CSA approved

POTENTIAL APPLICATIONS

- Logic level
- Dry circuit applications

3106 SERIES LOW-LEVEL HERMETIC THERMOSTATS

The 3106 Series is a single-pole, single-throw switch activated by a snap-action bimetal disc. The case is laser welded to form a hermetically-sealed steel housing, with a glass-to-metal seal at the terminal junction. WE-1 gold alloy cross point contacts allow use in potential low voltage applications. Temperature calibrations are pre-set at the factory, and each unit is thermally and mechanically inspected. It is available to open or close on temperature rise. A variety of mounting brackets and terminals is available.

TABLE 19. 3106 SERIES STANDARD OPERATING TEMPERATURE CHARACTERISTICS

Operating Temperature Range	Tolerance		Standard Mean Differential °C [°F]	Optional Max. Differential °C [°F]
	Open °C [°F]	Close °C [°F]		
-28.89°C to -12.2°C [-20°F to 10°F]	±5,6 [±10]	±4,4 [±8]	16,7 to 22, 2 [30 to 40]	–
	±4,4 [±8]	±4,4 [±8]	11,1 to 16,1 [20 to 29]	–
	±3,9 [±7]	±3,9 [±7]	7,8 to 10,6 [14 to 19]	–
	±3,3 [±6]	–	–	4,4 [8]
	–	±3,3 [±6]	–	4,4 [8]
-11.7°C to 93.3°C [11°F to 200°F]	±2,8 [±5]	±2,8 [±5]	11,1 to 44,4 [20 to 80]	–
	±2,8 [±5]	±2,8 [±5]	8,3 to 10,6 [15 to 19]	–
	±2,8 [±5]	±2,8 [±5]	5,6 to 7,8 [10 to 14]	–
	±2,2 [±4]	–	–	4,4 [8]
	–	±2,2 [±4]	–	4,4 [8]
	±1,7 [±3]	–	–	3,3 [6]
	–	±1,7 [±3]	–	3,3 [6]
93.9°C to 148.9°C [201°F to 300°F]	±4,4 [±8]	±3,3 [±6]	13,9 to 44,4 [25 to 80]	–
	±3,9 [±7]	±3,3 [±6]	8,3 to 13,3 [15 to 24]	–
	±3,3 [±6]	±3,3 [±6]	6,7 to 7,8 [12 to 14]	–
	±2,8 [±5]	±2,8 [±5]	5,6 to 7,8 [10 to 14]	–
	±2,2 [±4]	–	–	4,4 [8]
	–	±2,2 [±4]	–	4,4 [8]
149.4°C to 176.7°C [301°F to 350°F]	±6,7 [±12]	±5,6 [±10]	19,4 to 44,4 [35 to 80]	–
	±5,6 [±10]	±5,6 [±10]	13,9 to 18,9 [25 to 34]	–
	±4,4 [±8]	±4,4 [±8]	8,9 to 13,3 [16 to 24]	–
	±3,9 [±7]	±3,9 [±7]	7,8 to 10,0 [14 to 18]	–
	±2,8 [±5]	–	–	5,6 [10]
	–	±2,8 [±5]	–	5,6 [10]
177.2°C to 204.4°C [351°F to 400°F]	±8,3 [±15]	±8,3 [±15]	22,2 to 55,6 [40 to 100]	–
	±8,3 [±15]	±6,7 [±12]	16,7 to 21,7 [30 to 39]	–
	±5,6 [±10]	±5,6 [±10]	11,1 to 16,1 [20 to 29]	–
	±4,4 [±8]	±4,4 [±8]	8,9 to 10,6 [16 to 19]	–
	±3,3 [±6]	–	–	8,3 [15]
	–	±3,3 [±6]	–	8,3 [15]

TABLE 20. 3106 SERIES SPECIFICATIONS

Characteristic	Parameter
Switch type	SPST
Reset type	automatic
Amperage	500 mA (see Table 21)
Voltage	50 Vdc (see Table 21)
Operating temp. range	-29°C to 204.4°C [-20°F to 400°F]
Environmental exposure range	-62°C to 260°C [80°F to 500°F]
Dielectric strength	MIL-STD-202 Method 301 – 1250 Vac 60 Hz, terminal to case
Insulation resistance	MIL-STD-202 Method 302 Cond. B – 50 MOhm, 500 Vdc applied
Contact resistance	MIL-STD-202, Method 307 – 25 mOhm
Hermetic seal	MIL-STD-202, Method 112 Cond. $1x10^5$ Atm cc/sec
Moisture resistance	MIL-STD-202, Method 106
Material:*	
base	cold rolled plated steel
contacts	WE-1 gold alloy cross point
terminals	nickel/iron alloy
closure	hermetically sealed
brackets	cold rolled plated steel
plating	copper/nickel QQ-N-290
Marking	MIL-STD 1285
Approvals	UL File E36103, CSA File LR21048
Weight	5,5 g [0.19 oz] (brackets and wire leads not included)

**Value-added materials such as brackets and wires may affect operating temperature and environmental temperature ranges.*

TABLE 21. 3106 CONTACT RATINGS

Life Cycles	50 Vdc	120 Vac
100,000	500 mA	100 mA

PRECISION AND HIGH RELIABILITY THERMOSTATS

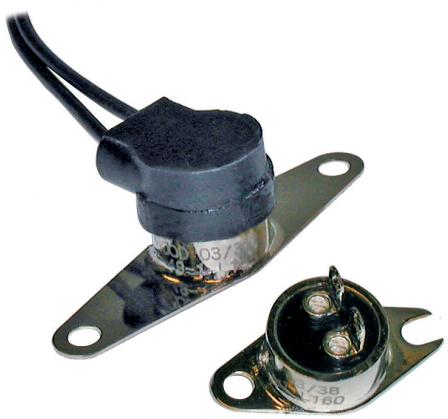

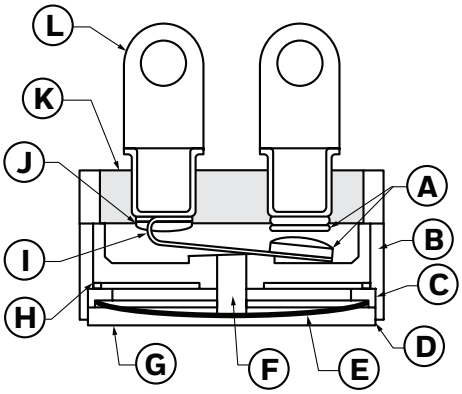

A Contacts
B Ceramic insulator
C Disc retainer
D Laser weld
E Bimetal disc
F Ceramic transfer pin
G Cap
H Capping washer
I Contact arm
J Weld cap
K Glass header
L Terminal

POTENTIAL APPLICATIONS

- Commercial aircraft
- Industrial
- HVAC

3800 SERIES INDUSTRIAL-GRADE THERMOSTATS FOR SEVERE DUTY APPLICATIONS

The 3800 Series uses the same materials and manufacture as Honeywell's military-grade thermostats, allowing them to be used where high levels of vibration and mechanical shock are common but a military device is not required. Originally designed for use in motor protection applications, the 3800 Series is now used in commercial aircraft and other applications where severe duty may be encountered.

TABLE 22. 3800 SERIES STANDARD OPERATING TEMPERATURE CHARACTERISTICS

Operating Temperature Range	Tolerance		Standard Mean Differential °C [°F]	Optional Max. Differential °C [°F]
	Open °C [°F]	Close °C [°F]		
-28.9°C to -12.2°C [-20°F to 10°F]	±5,6 [±10]	±4,4 [±8]	16,7 to 22,2 [30 to 40]	–
	±4,4 [±8]	±4,4 [±8]	11,1 to 16,1 [20 to 29]	–
	±3,9 [±7]	±3,9 [±7]	7,8 to 10,6 [14 to 19]	–
	±3,3 [±6]	–	–	4,4 [8]
	–	±3,3 [±6]	–	4,4 [8]
-11.7°C to 93.3°C [11°F to 200°F]	±2,8 [±5]	±2,8 [±5]	11,1 to 44,4 [20 to 80]	–
	±2,8 [±5]	±2,8 [±5]	8,3 to 10,6 [15 to 19]	–
	±2,8 [±5]	±2,8 [±5]	5,6 to 7,8 [10 to 14]	–
	±2,2 [±4]	–	–	4,4 [8]
	–	±2,2 [±4]	–	4,4 [8]
	±1,7 [±3]	–	–	3,3 [6]
	–	±1,7 [±3]	–	3,3 [6]
93.9°C to 148.9°C [201°F to 300°F]	±4,4 [±8]	±3,3 [±6]	13,9 to 44,4 [25 to 80]	–
	±3,9 [±7]	±3,3 [±6]	8,3 to 13,3 [15 to 24]	–
	±3,3 [±6]	±3,3 [±6]	6,7 to 7,8 [12 to 14]	–
	±2,8 [±5]	±2,8 [±5]	5,6 to 7,8 [10 to 14]	–
	±2,2 [±4]	–	–	4,4 [8]
	–	±2,2 [±4]	–	4,4 [8]
149.4°C to 176.7°C [301°F to 350°F]	±6,7 [±12]	±5,6 [±10]	19,4 to 44,4 [35 to 80]	–
	±5,6 [±10]	±5,6 [±10]	13,9 to 18,9 [25 to 34]	–
	±4,4 [±8]	±4,4 [±8]	8,9 to 13,3 [16 to 24]	–
	±3,9 [±7]	±3,9 [±7]	7,8 to 10,0 [14 to 18]	–
	±2,8 [±5]	–	–	5,6 [10]
	–	±2,8 [±5]	–	5,6 [10]
177.2°C to 204.4°C [351°F to 400°F]	±8,3 [±15]	±8,3 [±15]	22,2 to 55,6 [40 to 100]	–
	±8,3 [±15]	±6,7 [±12]	16,7 to 21,7 [30 to 39]	–
	±5,6 [±10]	±5,6 [±10]	11,1 to 16,1 [20 to 29]	–
	±4,4 [±8]	±4,4 [±8]	8,9 to 10,6 [16 to 19]	–
	±3,3 [±6]	–	–	6,7 [12]
	–	±3,3 [±6]	–	6,7 [12]
205°C to 232.2°C [401°F to 450°F]	±11,1 [±20]	±8,3 [±15]	22,2 to 55,6 [40 to 100]	–
232.8°C to 260°C [541°F to 500°F]	±13,9 [±25]	±13,9 [±25]	33,3 to 66,7 [60 to 120]	–

TABLE 23. 3800 SERIES SPECIFICATIONS

Characteristic	Parameter
Switch type	SPST
Reset type	automatic
Amperage	see Table 24
Voltage	120 Vac (see Table 24)
Operating temp. range	-28.9°C to 260°C [-20°F to 500°F]
Environmental exposure range	-62°C to 288°C [-80°F to 550°F]
Dielectric strength	MIL-STD-202 Method 301, 1250 Vac 60 Hz, terminal to case
Insulation resistance	MIL-STD-202 Method 302 Cond. B, 50 MOhm min., 500 Vdc applied
Contact resistance	MIL-STD-202 Method 307, 50 mOhm max.
Hermetic seal	MIL-STD-202, Method 112, Cond. $1x10^{-5}$ atm cc/sec
Vibration (random)	MIL-STD-202, Method 214, 30 Grms, 20 Hz to 2,000 Hz
Vibration (sinusoidal)	MIL-STD-202, Method 204, Cond. D 20 G, 20 Hz to 2,000 Hz
Mechanical shock	MIL-STD-202, Method 213, 400 G
Thermal shock	MIL-STD-202, Method 107, Cond. B
Acceleration	MIL-STD-202, Method 212, 20 G
Moisture resistance	MIL-STD-202, Method 106
Material:*	
base	cold plated steel
contacts	silver alloy
terminals	Ni/Fe alloy
closure	hermetically sealed
brackets	cold rolled plated steel
Marking	MIL-STD-1285
Weight	7.5 g [0.26 oz] (brackets and wires not included)

**Value-added materials such as brackets and wires may affect operating temperature and environmental temperature ranges.*

TABLE 24. 3800 CONTACT RATINGS

Life Cycles	30 Vac/dc	120 Vac	240 Vac
5,000	7 A	6 A	3 A
10,000	6.5 A	5 A	2.5 A
25,000	6 A	4 A	2 A
50,000	5.5 A	3 A	1.5 A
100,000	5 A	2 A	1 A

PRECISION AND HIGH RELIABILITY THERMOSTATS

High Reliability Thermostats

Tables 25 and 26 provide overall performance qualifications for the High Reliability Thermostats. Figure 3 indicates potential applications.

TABLE 25. PERFORMANCE QUALIFICATIONS, PART 1

Series	Shock	Vibration	Acceleration	Thermal Shock	Dielectric Strength
3200	MIL-STD-202 Method 213 – 750 G	MIL-STD-202 Method 204 – 30 G MIL-STD-202 Method 214 – 50 G	MIL-STD-202 Method 212 – 20 G	MIL-STD-202 Method 107 – Cond. B	MIL-STD-202 Method 301 – 1250 Vac
3200EM					
3MS1 QPL	MIL-STD-202 Method 213 – 100 G	MIL-STD-202 Method 204 – 20 G			
3500	MIL-STD-202 Method 213 – 400 G				
3153	MIL-STD-202 Method 213 – 100 G		N/A		
3000					

TABLE 26. PERFORMANCE QUALIFICATIONS, PART 2

Series	Insulation Resistance	Contact Resistance	Hermetic Seal	Moisture Resistance	Salt Spray*
3200 3200EM	MIL-STD-202 Method 302 – 500 MOhm	MIL-STD-202 Method 307 – 0.025 Ohm max.	MIL-STD-202 Method 112 – Cond. C	MIL-STD-202 Method 106	MIL-STD-202 Method 101 – Cond. B
3MS1 QPL		MIL-STD-202 Method 307 – 0.050 Ohm max.			
3500					
3153					
3000			MIL-STD-202 Method 112 - Cond. A		

**Not applicable to 3153 and 3500 Series with mounting brackets and operating temperatures exceeding 162,8°C [325°F].*

Figure 3. High Reliability Thermostat Applications

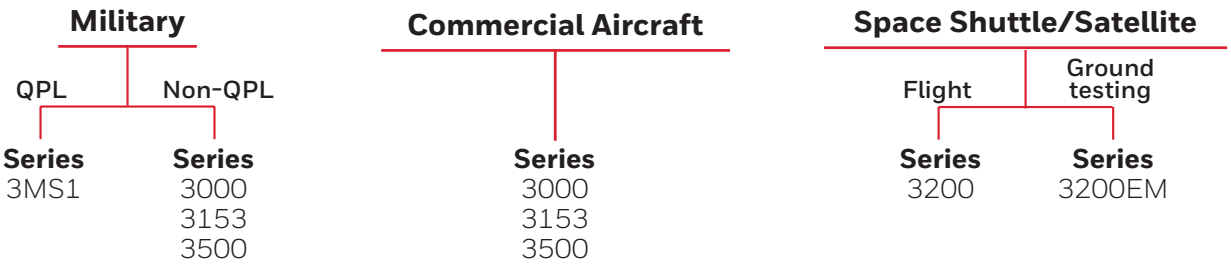

PRECISION AND HIGH RELIABILITY THERMOSTATS

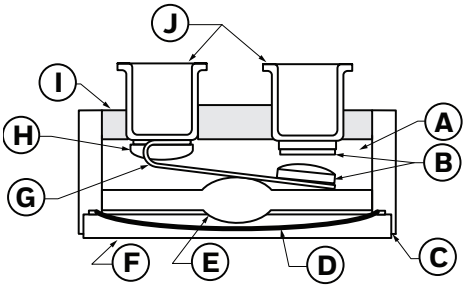

A Backfill dry gas
B Contacts
C Laser weld
D Bimetal disc
E Ceramic transfer pin
F Cap
G Contact arm
H Weld cap
I Glass header
J Terminals

POTENTIAL APPLICATIONS

- Non-QPL military
- Commercial aircraft
- Aircraft batteries

3153 SERIES LOW-PROFILE THERMOSTATS

The 3153 Series is a single-pole, single-throw switch activated by a snap-action bimetal disc. The case is laser welded to form a hermetically-sealed steel housing, with a glass-to-metal seal at the terminal junction. The low profile and compact design allow use in most applications that require miniaturization. Temperature calibrations are pre-set at the factory and each unit is thermally and mechanically inspected. It is available to open or close on temperature rise.

TABLE 27. 3153 SERIES STANDARD OPERATING TEMPERATURE CHARACTERISTICS

Operating Temperature Range	Tolerance		Nominal Differential °C [°F]	Max. Differential °C [°F]
	Open °C [°F]	Close °C [°F]		
-28.89°C to -12.2°C [-20°F to 10°F]	±5,6 [±10]	±4,4 [±8]	16,7 to 22,2 [30 to 40]	–
	±4,4 [±8]	±4,4 [±8]	11,1 to 16,1 [20 to 29]	–
	±3,9 [±7]	±3,9 [±7]	11,1 to 16,1 [20 to 29]	–
-11.7°C to 9.4°C [11°F to 49°F]	±2,8 [±5]	±2,8 [±5]	11,1 to 22,2 [20 to 40]	–
	±2,8 [±5]	±2,8 [±5]	8,3 to 10,6 [15 to 19]	–
	±2,8 [±5]	±2,8 [±5]	6,1 to 7,8 [11 to 14]	–
	Open or Close Only			
	±2,2 [±4]	±2,2 [±4]	–	4,4 [8]
10°C to 107.2°C [50°F to 225°F]	±2,8 [±5]	±2,8 [±5]	11,1 to 22,2 [20 to 40]	–
	±2,8 [±5]	±2,8 [±5]	8,3 to 10,6 [15 to 19]	–
	±2,8 [±5]	±2,8 [±5]	6,1 to 7,8 [11 to 14]	–
	Open or Close Only			
	±2,2 [±4]	±2,2 [±4]	–	4,4 [8]
107.8°C to 148.9°C [226°F to 350°F]	±2,8 [±5]	±2,8 [±5]	11,1 to 22,2 [20 to 40]	–
	±2,8 [±5]	±2,8 [±5]	8,3 to 10,6 [15 to 19]	–
	±2,8 [±5]	±2,8 [±5]	6,1 to 7,8 [11 to 14]	–
	Open or Close Only			
	±2,2 [±4]	±2,2 [±4]	–	6,7 [12]
149.4°C to 176.7°C [301°F to 350°F]	±6,7 [±12]	±5,6 [±10]	19,5 to 27,8 [35 to 50]	
	±5,6 [±10]	±5,6 [±10]	13,6 to 18,9 [25 to 34]	
	±4,4 [±8]	±4,4 [±8]	8,3 to 13,3 [15 to 24]	
	Open or Close Only			
	±3,9 [±7]	±3,9 [±7]	–	8,3 [15]

TABLE 28. 3153 SERIES SPECIFICATIONS

Characteristic	Parameter
Switch type	SPST
Reset type	automatic
Amperage	6 A resistive (see Table 29)
Voltage	30 Vac/dc (see Table 29)
Operating temp. range	-29°C to 177°C [-20°F to 350°F]
Environmental exposure range	-65°C to 260°C [-85°F to 500°F]
Dielectric strength	MIL-STD-202, Method 301, 1250 Vac
Insulation resistance	MIL-STD-202, Method 302, 500 MOhm
Contact resistance	MIL-STD-202, Method 307, 50 mOhm max.
Hermetic seal	MIL-STD-202, Method 112, Cond. C
Moisture resistance	MIL-STD-202, Method 106
Shock	MIL-STD-202, Method 213, 100 G
Vibration	MIL-STD-202, Method 204, 20 G
Thermal shock	MIL-STD-202, Method 107, Cond. B
Salt spray*	MIL-STD-202, Method 101, Cond. B
Housing material	cold rolled plated steel
Marking	MIL-STD-1285
Weight	6 g [0.12 oz] (brackets not included)
Approvals	Acceptance testing performed in accordance with MIL-PRF-24236, Table III.

**Not applicable to thermostats with brackets or those operating at temperatures above 162.8°C [325°F].*

TABLE 29. 3153 CONTACT RATINGS

Life Cycles	30 Vac/Vdc	120 Vac	240 Vac
5,000	6 A	4 A	1.5 A
10,000	4 A	4 A	1.25 A
25,000	3 A	3 A	1 A
50,000	2 A	2 A	1 A
100,000	2 A	2 A	1 A

PRECISION AND HIGH RELIABILITY THERMOSTATS

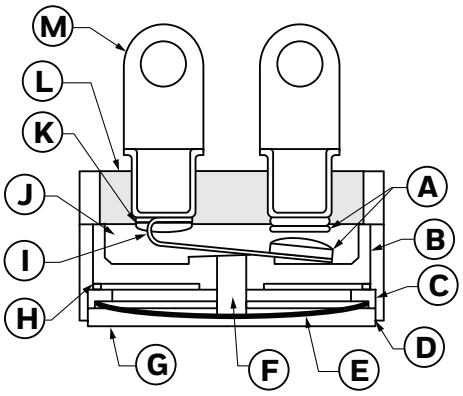

A Contacts
B Ceramic insulator
C Disc retainer
D Laser weld
E Bimetal disc
F Ceramic transfer pin
G Cap
H Capping washer
I Contact arm
J Backfill dry gas
K Weld cap
L Glass header
M Terminals

POTENTIAL APPLICATIONS

- Military aircraft
- Commercial aircraft
- Military vehicles

3500 SERIES MILITARY THERMOSTATS

The 3500 Series is a single-pole, single-throw switch activated by a snap-action bimetal disc. It meets or exceeds the requirements of MIL-PRF-24236 and is designed for potential military and commercial aircraft applications. It is not QPL listed (see the 3MS1 QPL Series). The case is laser welded to form a hermetically sealed steel housing, with a glass-to-metal seal at the terminal junction. Temperature calibrations are pre-set at the factory, and each unit is thermally and mechanically inspected. It is available to open or close on temperature rise.

TABLE 30. 3500 SERIES STANDARD OPERATING TEMPERATURE CHARACTERISTICS

Operating Temperature Range	Tolerance		Nominal Differential °C [°F]	Max. Differential °C [°F]
	Open °C [°F]	Close °C [°F]		
-45.6°C to 17.8°C [-50°F to 0°F]	±8,3 [±15]	±8,3 [±15]	16,7 to 33,3 [30 to 60]	–
	±5,6 [±10]	±5,6 [±10]	16,7 to 33,3 [30 to 60]	–
	±4,4 [±8]	±4,4 [±8]	11,1 to 27,8 [20 to 50]	–
-17.2°C to 93.3°C [1°F to 200°F]	±8,3 [±15]	±8,3 [±15]	16,7 to 33,3 [30 to 60]	–
	±5,6 [±10]	±5,6 [±10]	16,7 to 33,3 [30 to 60]	–
	±4,4 [±8]	±4,4 [±8]	11,1 to 27,8 [20 to 50]	–
	±2,8 [±5]	±2,8 [±5]	5,6 to 22,2 [10 to 40]	–
	±2,2 [±4]	–	–	4,4 [8]
	–	±2,2 [±4]	–	4,4 [8]
93.9°C to 148.9°C [201°F to 300°F]	±8,3 [±15]	±8,3 [±15]	16,7 to 33,3 [30 to 60]	–
	±5,6 [±10]	±5,6 [±10]	16,7 to 33,3 [30 to 60]	–
	±4,4 [±8]	±4,4 [±8]	11,1 to 27,8 [20 to 50]	–
	±2,8 [±5]	±2,8 [±5]	5,6 to 22,2 [10 to 40]	–
	±2,2 [±4]	–	–	4,4 [8]
	–	±2,2 [±4]	–	4,4 [8]
149.4°C to 176.6°C [301°F to 350°F]	±8,3 [±15]	±8,3 [±15]	16,7 to 33,3 [30 to 60]	–
	±5,6 [±10]	±5,6 [±10]	16,7 to 33,3 [30 to 60]	–
	±4,4 [±8]	±4,4 [±8]	11,1 to 27,8 [20 to 50]	–
	±2,8 [±5]	–	–	5,5 [10]
	–	2,8 [±5]	–	5,5 [10]
177.2°C to 204.4°C [351°F to 400°F]	±8,3 [±15]	±8,3 [±15]	16,7 to 44,4 [30 to 80]	–
	±5,6 [±10]	±5,6 [±10]	16,7 to 33,3 [30 to 60]	–
	±4,4 [±8]	±4,4 [±8]	8,3 to 10,6 [15 to 19]	–
	±3,3 [±6]	–	–	8,3 [15]
	–	±4,4 [±8]	–	8,3 [15]

TABLE 31. 3500 SERIES SPECIFICATIONS

Characteristic	Parameter
Switch type	SPST
Reset type	automatic
Amperage	5 A resistive (see Table 32)
Voltage	28 Vdc (see Table 32)
Operating temperature range	-51°C to 204°C [-60°F to 400°F]
Environmental exposure range	-65°C to 260°C [-85°F to 500°F]
Dielectric strength	MIL-STD-202, Method 301, 1250 Vac
Insulation resistance	MIL-STD-202, Method 302, 500 MOhm
Contact resistance	MIL-STD-202, Method 307, 50 mOhm max.
Hermetic seal	MIL-STD-202, Method 112, Cond. C
Moisture resistance	MIL-STD-202, Method 106
Shock	MIL-STD-202, Method 213, 400 G
Vibration	MIL-STD-202, Method 204, 20 G
Acceleration	MIL-STD-202, Method 212, 20 G
Thermal shock	MIL-STD-202, Method 107, Cond. B
Salt spray*	MIL-STD-202, Method 101, Cond. B
Housing material	cold rolled plated steel
Marking	MIL-STD-1285
Weight	7,5 g [0.26 oz] (brackets and lead wire not included)

**Not applicable to thermostats with brackets or those operating at temperatures above 162.8°C [325°F].*

TABLE 32. 3500 CONTACT RATINGS

Load Type	Life Cycles	28 Vac/dc	115 Vac
Resistive	100,000	5 A	2 A
Inductive	100,000	2.5 A	1 A
Lamp	100,000	1 A	0.5 A

PRECISION AND HIGH RELIABILITY THERMOSTATS

POTENTIAL APPLICATIONS

- HVAC
- Liquid bath control
- Transportation

3000 SERIES CUSTOM PACKAGED THERMOSTATS

The 3000 Series is customizable. Features include internal and external design options, all-welded, hermetically sealed stainless steel construction, customized probe length up to 152 mm [6 in] and a hermetic connector or potted construction.

A typical 3000 Series configuration includes:

- 3500 Series or other thermostat
- Termination selection
- Housing selection
- Customized part number

TABLE 33. 3000 SERIES SPECIFICATIONS*

Characteristic	Parameter
Switch type	custom
Reset type	Automatic
Amperage	custom
Voltage	custom
Operating temperature range	-40°C to 204°C [-40°F to 400°F]
Environmental exposure range	-65°C to 260°C [-85°F to 500°F]
Dielectric strength	MIL-STD-202, Method 301, 1250 Vac
Insulation resistance	MIL-STD-202, Method 302, 500 MOhm
Contact resistance	MIL-STD-202, Method 307, 50 mOhm max.
Hermetic seal	MIL-STD-202, Method 112 Cond. D
Moisture resistance	MIL-STD-202, Method 106
Shock	MIL-STD-202, Method 213, 100 G
Vibration	MIL-STD-202, Method 204, 20 G
Thermal shock	MIL-STD-202, Method 107, Cond. B
Salt spray	MIL-STD-202, Method 101, Cond. B
Housing material	stainless steel
Weight	72 g [2.5 oz]

**Specifications are applicable to the 3500 internal hermetic connector design. Parameters will be affected by internal series and design selected. Please consult Honeywell.*

PRECISION AND HIGH RELIABILITY THERMOSTATS

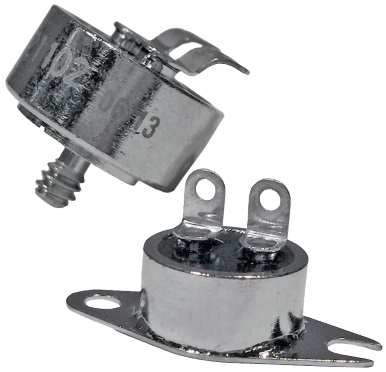

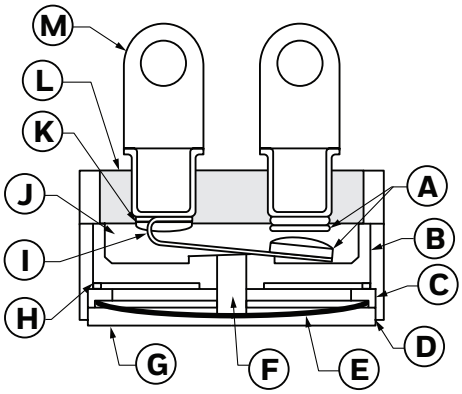

A Contacts
B Ceramic insulator
C Disc retainer
D Laser weld
E Bimetal disc
F Ceramic transfer pin
G Cap
H Capping washer
I Contact arm
J Backfill dry gas
K Weld cap
L Glass header
M Terminals

POTENTIAL APPLICATIONS

- Military aircraft
- Military vehicles

3MS1 QPL SERIES MILITARY THERMOSTATS

The 3MS1 QPL Series is a single-pole, single-throw switch activated by a snap-action bimetal disc. It is qualified to MIL-PRF-24236, Type 1, Class 4, and is QPL listed for military applications. The case is laser welded to form a hermetically-sealed steel housing, with a glass-to-metal seal at the terminal junction. Temperature calibrations are pre-set at the factory and each unit is thermally and mechanically inspected. It is available to open or close on temperature rise. Available mounting brackets and terminal configurations are in accordance with the MIL-PRF-24236/1 Military Specification Sheet.

TABLE 34. 3MS1 QPL SERIES STANDARD TEMPERATURE CHARACTERISTICS

Temperature Setpoint Range	Tolerance		Nominal Differential °C [°F]
	Open °C [°F]	Close °C [°F]	
-45.6°C to 17.8°C [-50°F to 0°F]	±13,9 [±25]	±13,9 [±25]	33,3 to 55,5 [60 to 100]
	±8,3 [±15]	±8,3 [±15]	22,2 to 44,4 [40 to 80]
	±5,6 [±10]	±5,6 [±10]	16,7 to 33,3 [30 to 60]
	±4,4 [±8]	±4,4 [±8]	11,1 to 27,8 [20 to 50]
-17.2°C to 93.3°C [1°F to 200°F]	±13,9 [±25]	±13,9 [±25]	33,3 to 55,5 [60 to 100]
	±8,3 [±15]	±8,3 [±15]	22,2 to 44,4 [40 to 80]
	±5,6 [±10]	±5,6 [±10]	16,7 to 33,3 [30 to 60]
	±4,4 [±8]	±4,4 [±8	11,1 to 27,8 [20 to 50]
	±2,8 [±5]	±2,8 [±5	5,6 to 22,2 [10 to 40]
	±1,7 [±3]	±1,7 [±3]	5,6 to 11,1 [10 to 20]
93.9°C to 148.9°C [201°F to 300°F]	±13,9 [±25]	±13,9 [±25]	33,3 to 55,5 [60 to 100]
	±8,3 [±15]	±8,3 [±15]	22,2 to 44,4 [40 to 80]
	±5,6 [±10]	±5,6 [±10]	16,7 to 33,3 [30 to 60]
	±4,4 [±8]	±4,4 [±8	11,1 to 27,8 [20 to 50]
	±2,8 [±5]	±2,8 [±5]	5,6 to 22,2 [10 to 40]
149.4°C to 191°C [301°F to 375°F]	±13,9 [±25]	±13,9 [±25]	33,3 to 55,5 [60 to 100]
	±8,3 [±15]	±8,3 [±15]	22,2 to 44,4 [40 to 80]
	±5,6 [±10]	±5,6 [±10]	16,7 to 33,3 [30 to 60]
	±4,4 [±8]	±4,4 [±8]	11,1 to 27,8 [20 to 50]

TABLE 35. 3MS1 QPL SERIES SPECIFICATIONS

Characteristic	Parameter
Switch type	SPST
Reset type	automatic
Amperage	5 A resistive (see Table 36)
Voltage	28 Vac/dc (see Table 36)
Operating temperature range	-46°C to 190°C [-50°F to 375°F]
Environmental exposure range	-65°C to 260°C [-85°F to 500°F]
Dielectric strength	MIL-STD-202, Method 301, 1250 Vac
Insulation resistance	MIL-STD-202, Method 302, 500 MOhm
Contact resistance	MIL-STD-202, Method 307, 50 mOhm max.
Hermetic seal	MIL-STD-202, Method 112, Cond. C
Moisture resistance	MIL-STD-202, Method 106
Shock	MIL-STD-202, Method 213, 100 G
Vibration	MIL-STD-202, Method 204, 20 G
Acceleration	MIL-STD-202, Method 212, 20 G
Thermal shock	MIL-STD-202, Method 107, Cond. B
Salt spray	MIL-STD-202, Method 101, Cond. B
Housing material	cold rolled plated steel
Marking	MIL-STD-1285
Approvals	QPL MIL-PRF-24236/1
Weight	7,5 g [0.26 oz]

TABLE 36. 3MS1 QPL SERIES CONTACT RATINGS

Load Type	Life Cycles	28 Vac/dc	115 Vac
Resistive	100,000	5 A	2 A
Inductive	100,000	2.5 A	1 A
Lamp	100,000	1 A	0.5 A

PRECISION AND HIGH RELIABILITY THERMOSTATS

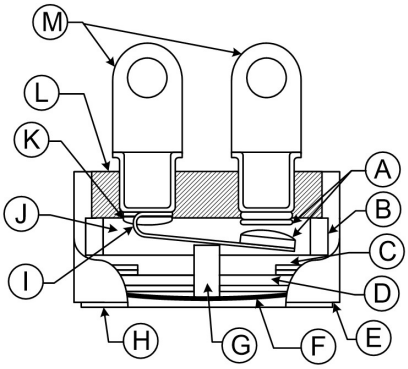

A Contacts
B Ceramic insulator
C Ceramic pin guide
D Disc retainer
E Laser weld
F Bimetal disc
G Ceramic transfer pin
H Cap
I Contact arm
J Backfill dry gas
K Weld cap
L Glass header
M Terminals

POTENTIAL APPLICATIONS

- Satellites
- Rockets
- Missiles

3200 SERIES HIGH RELIABILITY AEROSPACE THERMOSTATS

The 3200 Series is a single-pole, single-throw switch activated by a snap-action bimetal disc. It is manufactured and tested to meet or exceed critical military and aerospace specifications for spaceflight use, including temperature stability, shock, vibration and cleanliness. The case is laser welded to form a hermetically-sealed steel housing, with a glass-to-metal seal at the terminal junction. Temperature calibrations are pre-set at the factory and each unit is thermally and mechanically inspected. It is available to open or close on temperature rise.

The 3200EM (Engineering Model) version is produced using the same components as the 3200, but is not subjected to the rigors of extensive flight testing. It is specifically designed for ground and experimental testing.

TABLE 37. 3200 SERIES STANDARD TEMPERATURE CHARACTERISTICS

Temperature Setpoint Range	Tolerance		Nominal Differential °C [°F]
	Open °C [°F]	Close °C [°F]	
-51.1°C to -29.4°C [-60°F to 21°F]	consult factory		consult factory
-28.9°C to 17.8°C [-20°F to 0°F]	±4,4 [±8]	±3,9 [±7]	16,0 to 16,7 [19 to 30]
	±3,9 [±7]	±3,3 [±6]	9,4 to 15,0 [17 to 27]
	±3,3 [±6]	±3,3 [±6]	8,9 to 14,5 [16 to 26]
	±3,3 [±6]	±2,8 [±5]	8,3 to 13,9 [15 to 25]
	±2,8 [±5]	±2,8 [±5]	8,3 to 13,9 [15 to 25]
7.2°C to 37.8°C [1°F to 100°F]	±3,9 [±7]	±3,3 [±6]	9,4 to 15,0 [17 to 27]
	±3,3 [±6]	±3,3 [±6]	8,9 to 13,9 [16 to 25]
	±3,3 [±6]	±2,8 [±5]	8,3 to 13,9 [15 to 25]
	±2,8 [±5]	±2,8 [±5]	7,8 to 13,9 [14 to 25]
	±2,8 [±5]	±2,2 [±4]	7,2 to 13,9 [13 to 25]
	±2,2 [±4]	±2,2 [±4]	6,7 to 13,9 [12 to 25]
38.3°C to 93.3°C [101°F to 200°F]	±5,0 [±9]	±4,4 [±8]	11,7 to 16,7 [21 to 30]
	±3,9 [±7]	±3,3 [±6]	9,4 to 16,7 [17 to 30]
	±3,3 [±6]	±2,8 [±5]	8,3 to 16,7 [15 to 30]
	±2,8 [±5]	±2,8 [±5]	7,8 to 13,9 [14 to 25]
93.9°C to 162.8°C [200°F to 325°F]	±5,6 [±10]	±5,0 [±9]	12,8 to 19,4 [23 to 35]
	±4,4 [±8]	±3,3 [±6]	10,0 to 19,4 [18 to 35]
	±3,9 [±7]	±3,3 [±6]	9,4 to 19,4 [17 to 35]
	±3,3 [±6]	±3,3 [±6]	8,9 to 14,5 [16 to 35]

TABLE 38. 3200 SERIES SPECIFICATIONS

Characteristic	Parameter
Switch type	SPST
Reset type	automatic
Amperage	5 A resistive (see Table 39)
Voltage	28 Vac/dc (see Table 39)
Operating temperature range	-51°C to 162.8°C [-60°F to 325°F]
Environmental exposure range	-65°C to 177°C [-85°F to 350°F]
Dielectric strength	MIL-STD-202, Method 301, 1250 Vac
Insulation resistance	MIL-STD-202, Method 302, 500 MOhm
Contact resistance	MIL-STD-202, Method 307, 50 mOhm max.
Hermetic seal	MIL-STD-202, Method 112, Cond. C
Moisture resistance	MIL-STD-202, Method 106
Shock	MIL-STD-202, Method 213, 750 G
Vibration	MIL-STD-202, Method 204, 30 G; MIL-STD-202, Method 214, 50 G
Thermal shock	MIL-STD-202, Method 107, Cond. B
Salt spray	MIL-STD-202, Method 101, Cond. B
Housing material	cold rolled plated steel
Marking	MIL-STD-1285
Weight	8,5 g [0.30 oz] (brackets and end wires not included)

TABLE 39. 3200 SERIES CONTACT RATINGS

Load Type	Life Cycles	28 Vac/dc	115 Vac
Resistive	100,000	5 A	2 A
Inductive	100,000	2.5 A	1 A
Lamp	100,000	1 A	0.5 A

PRECISION AND HIGH RELIABILITY THERMOSTATS

MOUNTING HARDWARE (All dimensions for reference only: mm/[in])

Figure 4. 3001/3004 Series Brackets

B-201

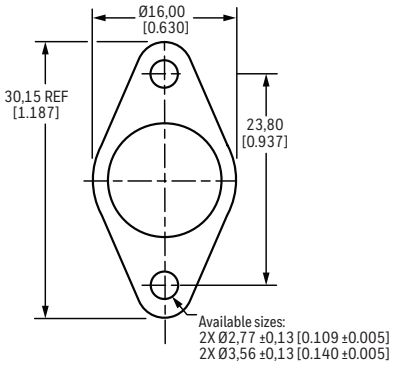

B-206

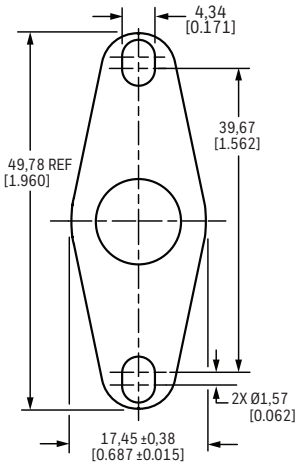

B-209

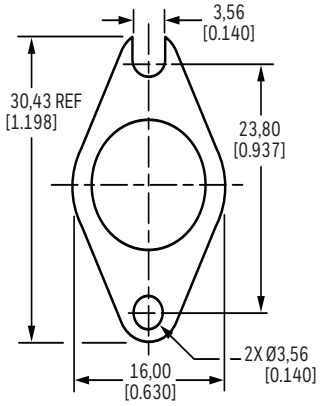

B-210

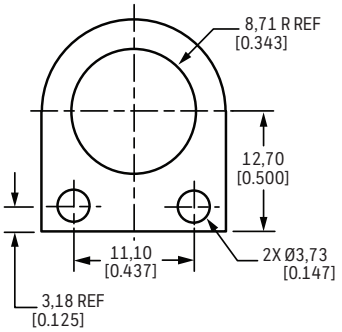

B-212

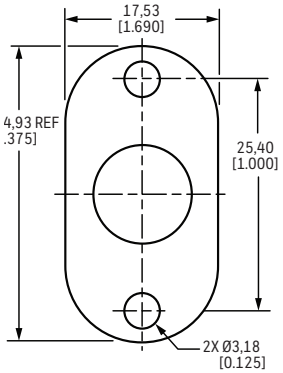

B-213

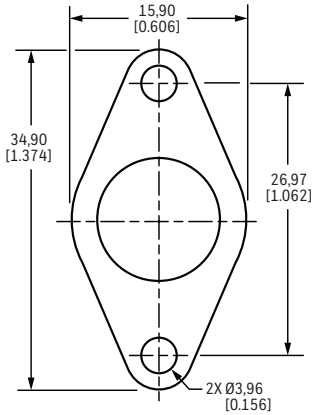

Figure 5. 3001/3004 Series Cap Studs

Round:

S334 4-40	**S343** 10-32
S337 6-32	**S346** M3 x 0.5
S340 8-32	**S349** M4 x 0.7

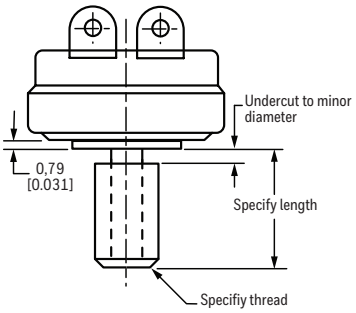

Hex:

HS367 6-32	**HS376** M3 x 0.5
HS370 8-32	**HS379** M4 x 0.7
HS373 10-32	**HS372** M5 x 0.8

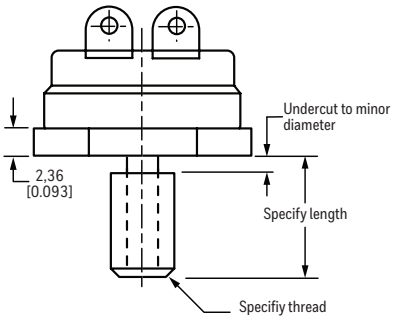

Figure 6. 3001/3004 Series Radius Cap

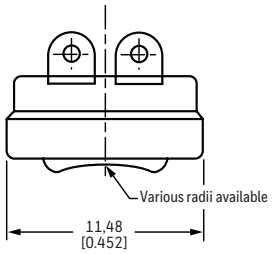

PRECISION AND HIGH RELIABILITY THERMOSTATS

Figure 7. 3001 Series Terminals

T123

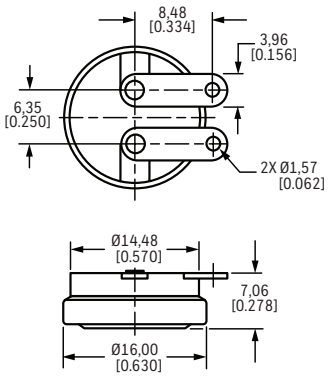

T124

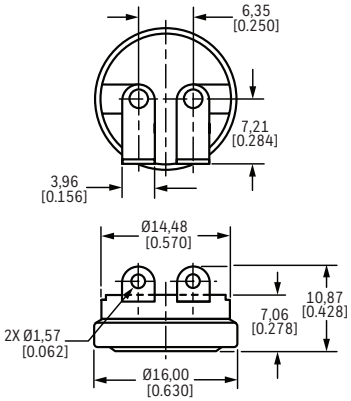

T125

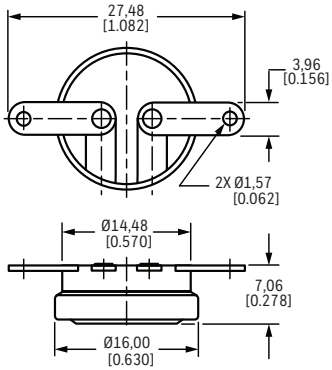

T126

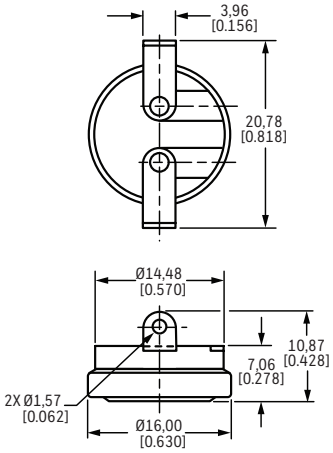

T127

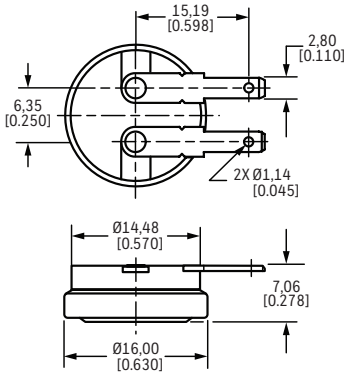

T128

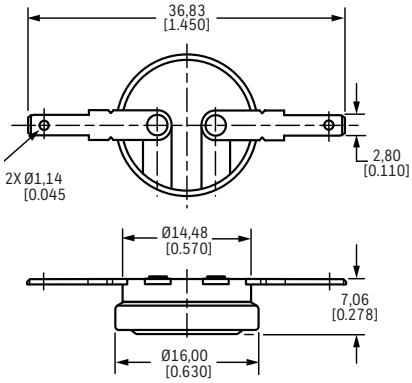

T177

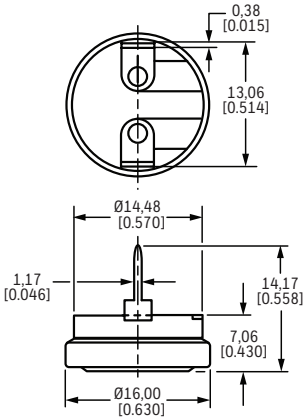

PRECISION AND HIGH RELIABILITY THERMOSTATS

Figure 8. 3004 Series Terminals

T123

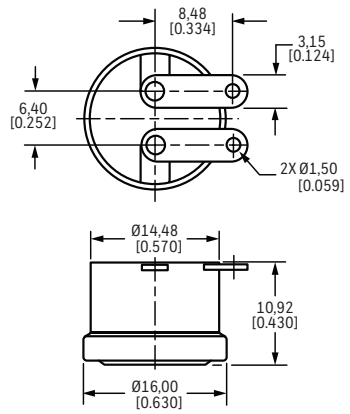

T124

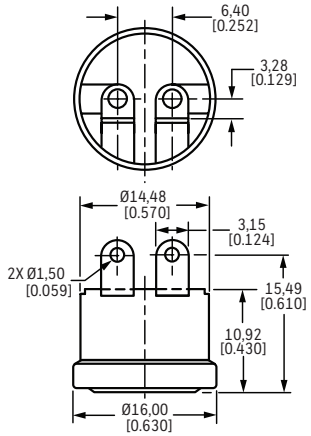

T125

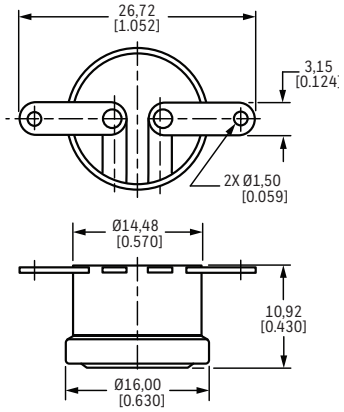

T126

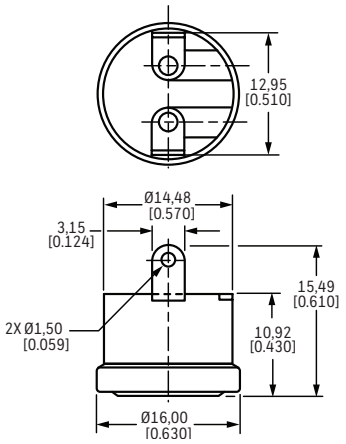

T127

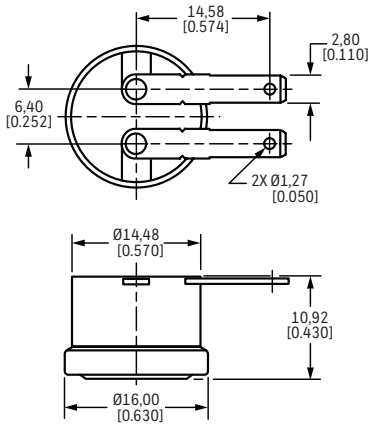

T128

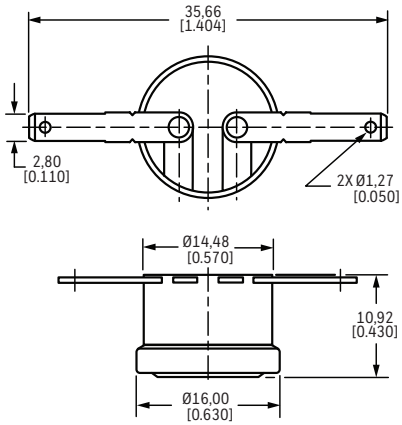

T177

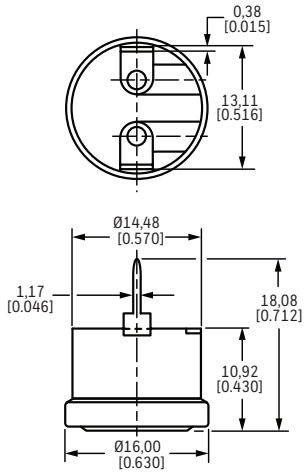

PRECISION AND HIGH RELIABILITY THERMOSTATS

Figure 9. 3100/3106/3MS1/3200/3500/3800 Series Terminals

T116

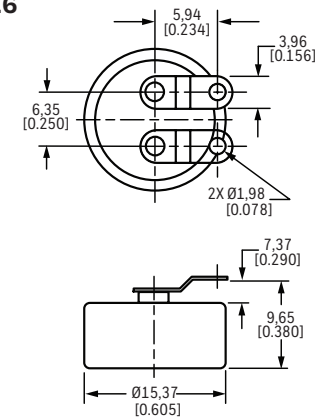

T117

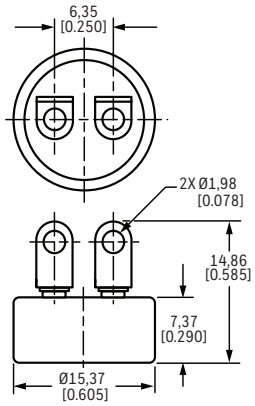

T120

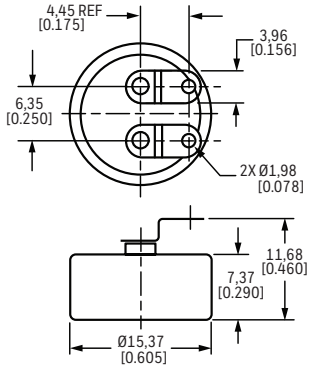

Figure 10. 3150/3156/3153 Series Terminals

T109

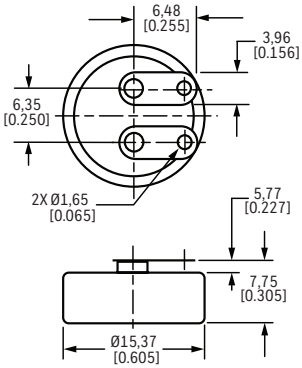

T110

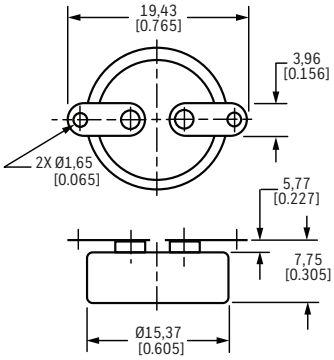

T111

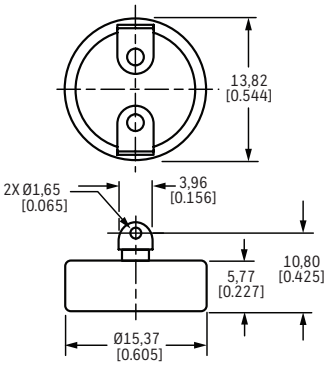

Figure 11. 3000 Series Terminations

0
Hermetic connector, bayonet or threaded

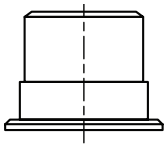

3
1/2-1/4 NPT thread, wire leads and lengths as required

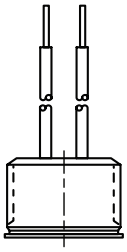

4a
1/2-1/4 NPT thread, 0.25 in male quick connect terminals

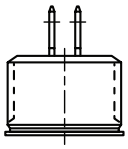

4b
1/2-1/4 NPT thread, 0.25 in male quick connect terminals

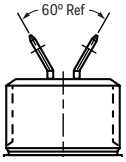

1
Wire leads and lengths as required

2a
0.25 in male quick connect terminals

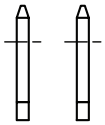

2b
0.25 in male quick connect terminals

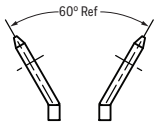

PRECISION AND HIGH RELIABILITY THERMOSTATS

Figure 12. 3000 Series Housings: Used with Terminations 0, 1, 2a, 2b, 3, 4a, 4b only

3000-45X
3/4-16 UNF-3A thread, 1 in hex

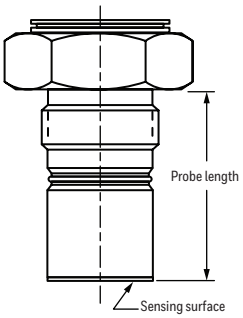

3000-55X
1/2-14 NPT thread, 7/8 in hex

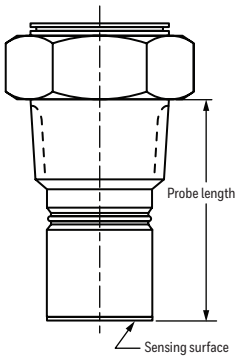

Figure 13. 3000 Series Housings: Used with Terminations 1, 2a, 2b only

3000-141
3/4-16 UNF-3A thread, 1 in hex

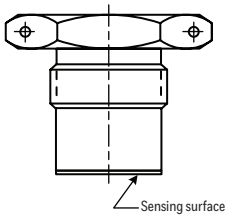

3000-53X
1/2-14 NPT thread, 7/8 in hex

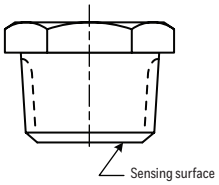

Figure 14. Overmolds Used on All Series (3100/3106 Shown)

Overmolds provide electrical isolation. Examples in this figure show the 3100/3106 Series; however, overmolds may be used on other series. Please consult Honeywell.

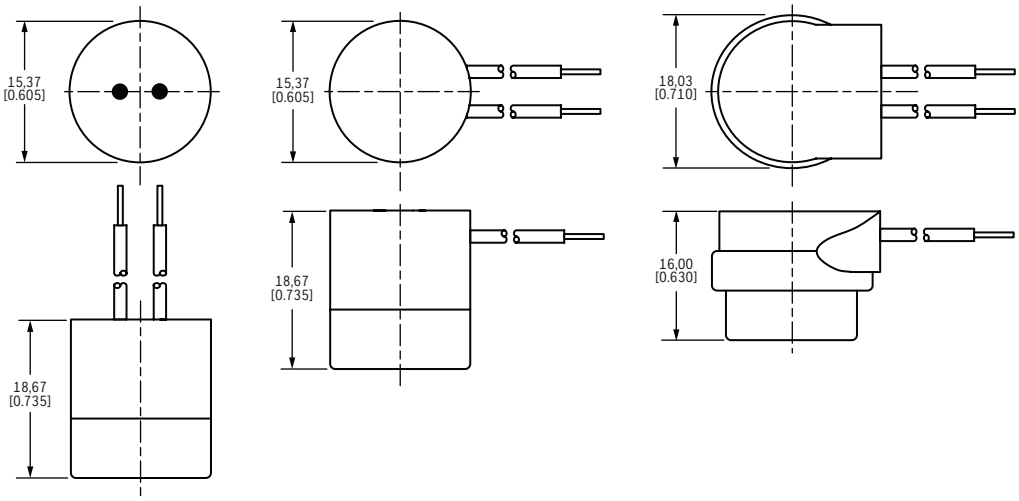

Figure 15. Cap Studs Used on All Series

Round:
S303 4-40
S306 6-32
S330 6-40
S309 8-32
S312 10-24
S315 10-32
S324 1/4-28
S318 M3 x 0.5
S321 M4 x 0.7
S327 M5 x 0.8

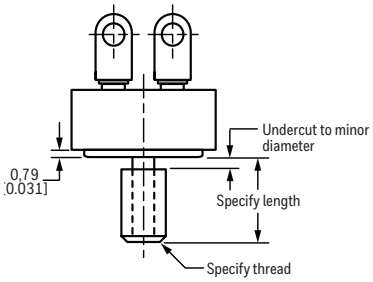

Hex[1]:
HS303 4-40
HS306 6-32
HS330 6-40
HS309 8-32
HS312 10-24
HS315 10-32
HS324 1/4-28
HS318 M3 x 0.5
HS321 M4 x 0.7
HS327 M5 x 0.8

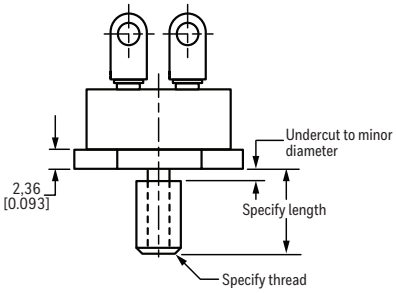

[1]Not available on 3150, 3153, 3156 Series

PRECISION AND HIGH RELIABILITY THERMOSTATS

MOUNTING HARDWARE (All dimensions for reference only: mm/[in])

Figure 16. 3100/3106/3150/3153/3156/3200/3500/3800 & 3MS1 Series Hermetic Thermostat Standard Mounting Brackets

B-208

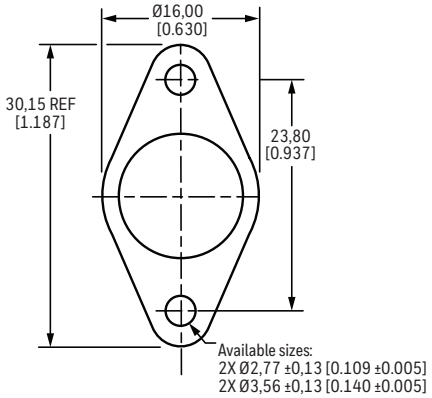

B-209

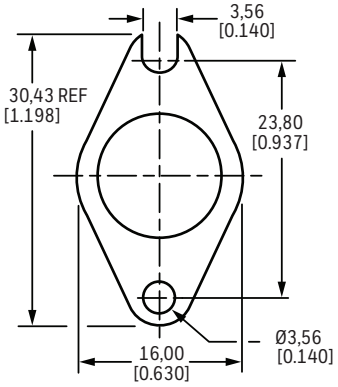

B-210

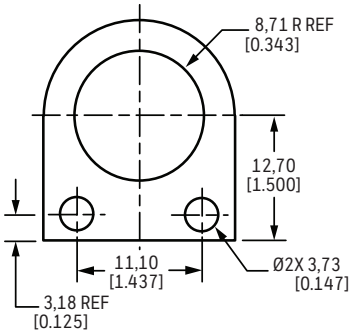

B-212

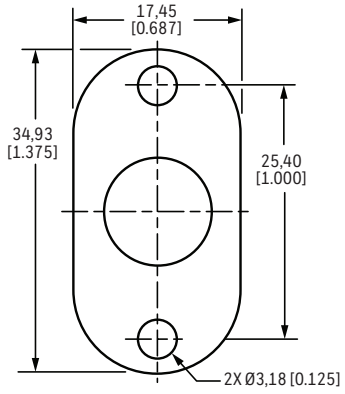

B-213

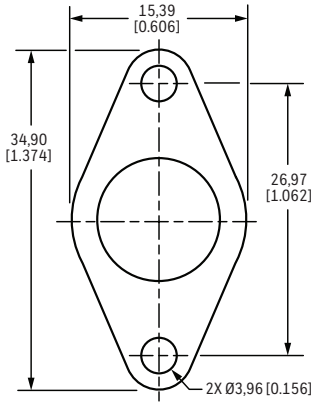

B-214
Top mount (excludes 3150, 3153 & 3156)

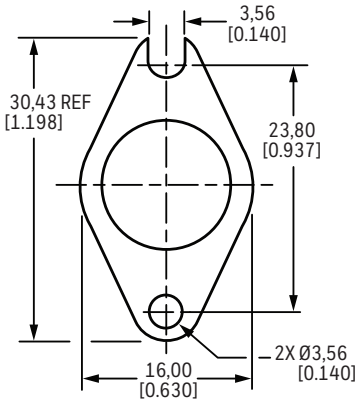

B-215
Top or bottom mount
(excludes 3150, 3153 & 3156)

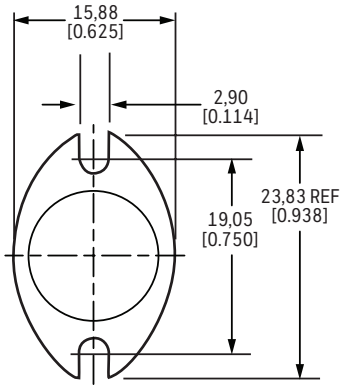

B-245
Top mount (excludes 3150, 3153 & 3156)

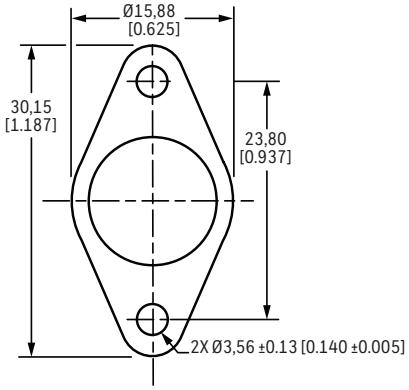

PRECISION AND HIGH RELIABILITY THERMOSTATS

3100U REDI-TEMP SERIES

See pages 10 and 11 for specifications and applications.

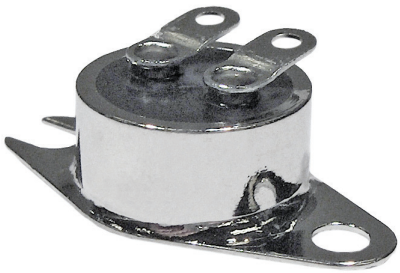

TABLE 40. 3100U REDI-TEMP SERIES OPEN ON RISE

Catalog Listing	Open Temp. °C [°F]	Open Tolerance °C [°F]	Close Temp. °C [°F]	Close Tolerance °C [°F]
3100U 00031431	4 [40]	±3 [±5]	-7 [20]	±3 [±5]
3100U 00031432	10 [50]	±3 [±5]	-1 [30]	±3 [±5]
3100U 00031433	16 [60]	±3 [±5]	4 [40]	±3 [±5]
3100U 00031434	21 [70]	±3 [±5]	10 [50]	±3 [±5]
3100U 00031435	27 [80]	±3 [±5]	16 [60]	±3 [±5]
3100U 00031436	32 [90]	±3 [±5]	21 [70]	±3 [±5]
3100U 00031437	38 [100]	±3 [±5]	27 [80]	±3 [±5]
3100U 00031438	43 [110]	±3 [±5]	32 [90]	±3 [±5]
3100U 00031439	49 [120]	±3 [±5]	38 [100]	±3 [±5]
3100U 00031440	54 [130]	±3 [±5]	43 [110]	±3 [±5]
3100U 00031441	60 [140]	±3 [±5]	49 [120]	±3 [±5]
3100U 00031442	66 [150]	±3 [±5]	54 [130]	±3 [±5]
3100U 00031443	71 [160]	±3 [±5]	60 [140]	±3 [±5]
3100U 00031444	77 [170]	±3 [±5]	66 [150]	±3 [±5]
3100U 00031445	82 [180]	±3 [±5]	71 [160]	±3 [±5]
3100U 00031446	88 [190]	±3 [±5]	77 [170]	±3 [±5]
3100U 00031447	93 [200]	±3 [±5]	82 [180]	±3 [±5]
3100U 00031448	99 [210]	±5 [±8]	85 [185]	±4 [±6]
3100U 00031449	104 [220]	±5 [±8]	91 [195]	±4 [±6]
3100U 00031450	110 [230]	±5 [±8]	96 [205]	±4 [±6]
3100U 00031451	116 [240]	±5 ± [8]	102 [215]	±4 [±6]
3100U 00031452	121 [250]	±5 [±8]	107 [225]	±4 [±6]

Note: For precision thermostats, individual part marking shall be as follows:

Example: 3100U 00031431 would be marked 3100U-3-1431

TABLE 41. 3100U REDI-TEMP SERIES CLOSE ON RISE

Catalog Listing	Close Temp. °C [°F]	Close Tolerance °C [°F]	Open Temp. °C [°F]	Open Tolerance °C [°F]
3100U 00031453	4 [40]	±5 [±5]	-7 [20]	±3 [±5]
3100U 00031454	10 [50]	±5 [±5]	-1 [30]	±3 [±5]
3100U 00031455	16 [60]	±5 [±5]	4 [40]	±3 [±5]
3100U 00031456	27 [80]	±5 [±5]	16 [60]	±3 [±5]
3100U 00031457	38 [100]	±5 [±5]	27 [80]	±3 [±5]
3100U 00031458	49 [120]	±5 [±5]	38 [100]	±3 [±5]
3100U 00031459	60 [140]	±5 [±5]	49 [120]	±3 [±5]
3100U 00031460	71 [160]	±5 [±5]	60 [140]	±3 [±5]
3100U 00031461	82 [180]	±5 [±5]	71 [160]	±3 [±5]
3100U 00031462	93 [200]	±5 [±5]	82 [180]	±3 [±5]
3100U 00031463	104 [220]	±4 [±6]	91 [195]	±5 [±8]

Figure 18. 3100U REDI-TEMP Series Dimensions (For reference only: mm/[in])

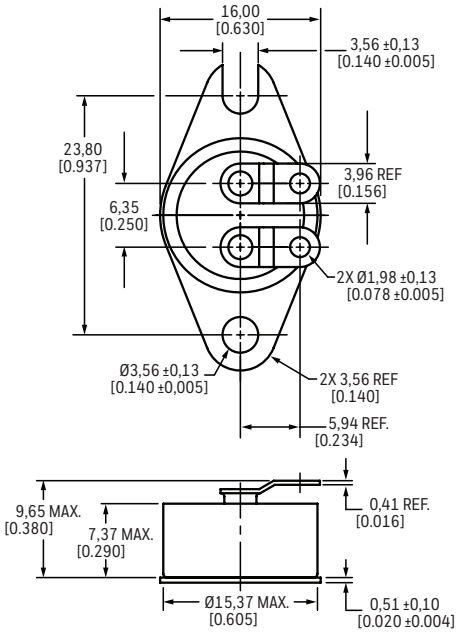

ADDITIONAL MATERIALS

The following associated literature is available at sps.honeywell.com/ast:

- Product range guide
- Application notes

WARRANTY/REMEDY

Honeywell warrants goods of its manufacture as being free of defective materials and faulty workmanship during the applicable warranty period. Honeywell's standard product warranty applies unless agreed to otherwise by Honeywell in writing; please refer to your order acknowledgment or consult your local sales office for specific warranty details. If warranted goods are returned to Honeywell during the period of coverage, Honeywell will repair or replace, at its option, without charge those items that Honeywell, in its sole discretion, finds defective. **The foregoing is buyer's sole remedy and is in lieu of all other warranties, expressed or implied, including those of merchantability and fitness for a particular purpose. In no event shall Honeywell be liable for consequential, special, or indirect damages.**

While Honeywell may provide application assistance personally, through our literature and the Honeywell web site, it is buyer's sole responsibility to determine the suitability of the product in the application.

Specifications may change without notice. The information we supply is believed to be accurate and reliable as of this writing. However, Honeywell assumes no responsibility for its use.

⚠ WARNING
MISUSE OF DOCUMENTATION

- The information presented in this product sheet is for reference only. Do not use this document as a product installation guide.
- Complete installation, operation, and maintenance information is provided in the instructions supplied with each product.

Failure to comply with these instructions could result in death or serious injury.

⚠ WARNING
PERSONAL INJURY

DO NOT USE these products as safety or emergency stop devices, or in any application where failure of the product could result in personal injury.

Failure to comply with these instructions could result in death or serious injury.

FOR MORE INFORMATION

Honeywell Advanced Sensing Technologies services its customers through a worldwide network of sales offices and distributors. For application assistance, current specifications, pricing or the nearest Authorized Distributor, visit our website or call:

USA/Canada	+1 302 613 4491
Latin America	+1 305 805 8188
Europe	+44 1344 238258
Japan	+81 (0) 3-6730-7152
Singapore	+65 6355 2828
Greater China	+86 4006396841

Honeywell
Advanced Sensing Technologies
830 East Arapaho Road
Richardson, TX 75081
sps.honeywell.com/ast

009048-5-EN | 5 | 08/21
© 2021 Honeywell International Inc. All rights reserved.

Honeywell