3318 NN

DC axial fan

ebm-papst St. Georgen GmbH & Co. KG
Hermann-Papst-Str. 1
D-78112 St. Georgen
Phone +49 (0) 7724 81-0
Fax +49 (0) 7724 81-1309
info2@de.ebmpapst.com
www.ebmpapst.com

Nominal data

Type	3318 NN	
Nominal voltage	VDC	48
Nominal voltage range	VDC	36 .. 60
Speed (rpm)	min^{-1}	2650
Power consumption	W	1.8
Air flow	m^3/h	80
Sound power level	B	4.7
Sound pressure level	dB(A)	35

ml = Max. load · me = Max. efficiency · fa = Free air · cs = Customer specification · ce = Customer equipment
Subject to change

DC axial fan

Technical description

Housing material	Glass-fiber reinforced PBT plastic
Impeller material	Glass-fiber reinforced PA plastic
Weight	1.90 kg
Dimensions	92 x 92 x 32 mm
Airflow direction	Exhaust over struts
Direction of rotation	Clockwise, viewed toward rotor
Degree of protection	IP40
Storage	Ball bearing
Service life L10 at 40 °C	50000 h
Service life L10 at maximum temperature	22500 h
Cable	With leads AWG 24 UL 1061, TR 64

ebm-papst St. Georgen GmbH & Co. KG · Hermann-Papst-Str. 1 · D-78112 St. Georgen · Phone +49 (0) 7724 81-0 · Fax +49 (0) 7724 81-1309 · info2@de.ebmpapst.com · www.ebmpapst.com

DC axial fan

Product drawing

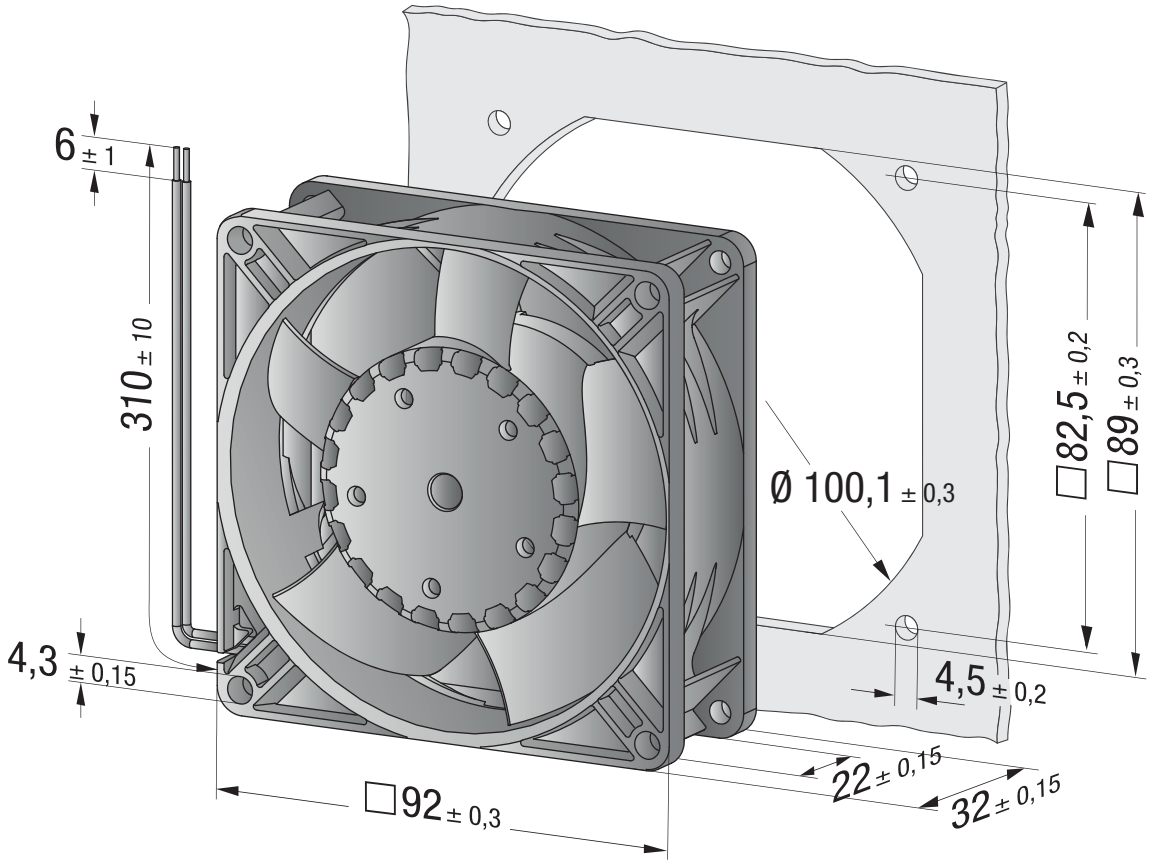

ebm-papst St. Georgen GmbH & Co. KG · Hermann-Papst-Str. 1 · D-78112 St. Georgen · Phone +49 (0) 7724 81-0 · Fax +49 (0) 7724 81-1309 · info2@de.ebmpapst.com · www.ebmpapst.com

DC axial fan

Curves

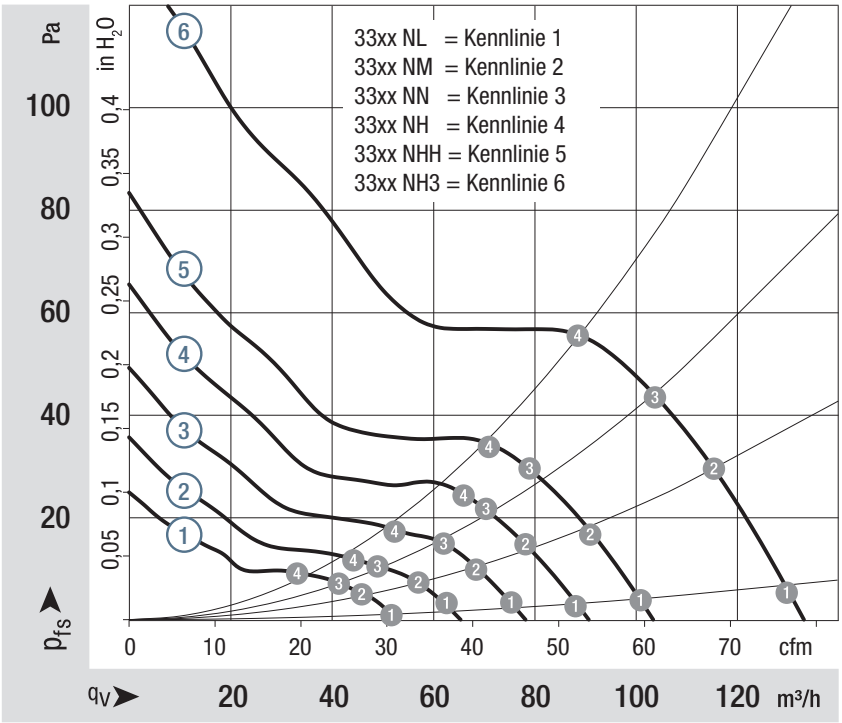

ebm-papst St. Georgen GmbH & Co. KG · Hermann-Papst-Str. 1 · D-78112 St. Georgen · Phone +49 (0) 7724 81-0 · Fax +49 (0) 7724 81-1309 · info2@de.ebmpapst.com · www.ebmpapst.com