RF 15 short-travel keyswitch

General data

Low-profile keyboards with RF 15 components should be designed with a 19.05 mm grid. With this grid, frame webs remain free between the individual keys. The overlay can be glued onto these frame webs; we recommend area embossing over the keys for the overlays.

Technical data

General information	
Colour of lens	see order block
Recommended key grid	19.05 mm
Dimensions	
Length	15 mm
Width	15 mm
Overall height	9.7 mm
Mechanical design	
Mounting	soldering into PCB
Terminals	contacts tin-plated, fix contact Ag plated
Contact system	snap-action contact
Contact arrangement	1 NO
Contact materials	Au/Ag
Illumination	spot-/fully illuminated
LED colour	see order block
LED type	see order block
Mechanical characteristics	
Operating force max.	2 ... 3 N
Operating travel	0.5 mm
Switching travel	0.5 mm
Robustness min.	with through-plated PCB 100 N
Electrical characteristics	
Rated voltage min.	Au: 0.02 V, Ag: 3 V
Rated voltage max.	Au: 42 V, Ag: 50 V
Rated current min.	Au: 0,01 mA, Ag: 0,1 mA
Rated current max.	Au: 100 mA, Ag: 250 mA
Rated power max. (ohmic load)	Au: 2 W, Ag: 12.5 W
Contact resistance when new max.	100 mΩ
Contact resistance acc. to life max.	3 Ω
Insulation resistance	10^9 Ω
ESD strength (underneath overlay)	15 kV
Bouncing time max.	5 ms
Other specifications	
Ambient temp. operating min.	-25 °C
Ambient temp. operating max.	+70 °C
Storage temperature min.	-40 °C
Storage temperature max. (product)	+80 °C
Storage temperature max. (in tube)	+50 °C
Resistance to constant environment	according to IEC 600 68-2-3 and 2-30
Resistance at variable environment	according to IEC 600 68-2-14 and 2-33
Operating life min.	1,000,000
Soldering time max.	2,5 sec.
Soldering temperature max.	250 °C
Flammability of materials	UL 94 HB

Force/Travel Diagram – Keyswitch RF 15

Operation characteristic limits RF

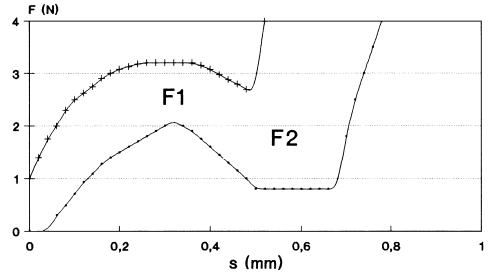

F 1 = Max. operating force
F 2 = Force at contact
F 2 is max. 55% of F 1

Circuit Diagram – Keyswitch RF 15

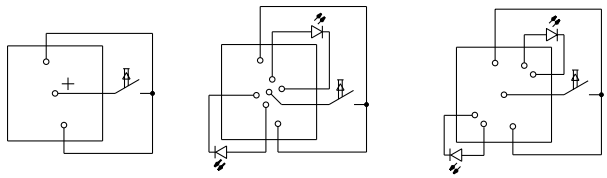

Keyswitch, non-illuminated | Keyswitch, fully illuminated | Keyswitch, spot-illuminated

Dimensional Drawing RF 15

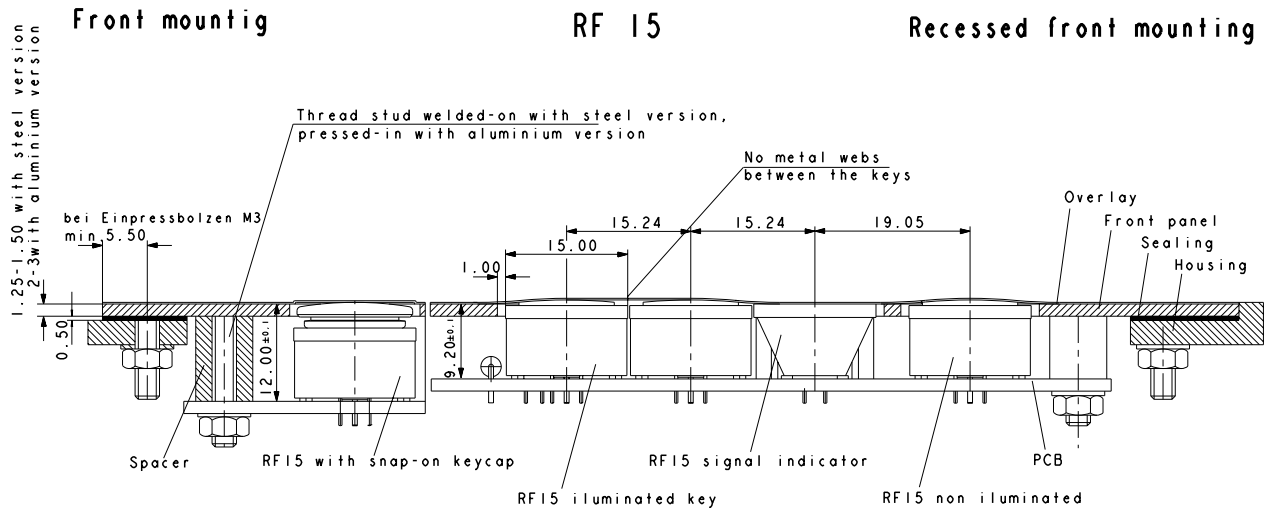

Hole Pattern RF 15

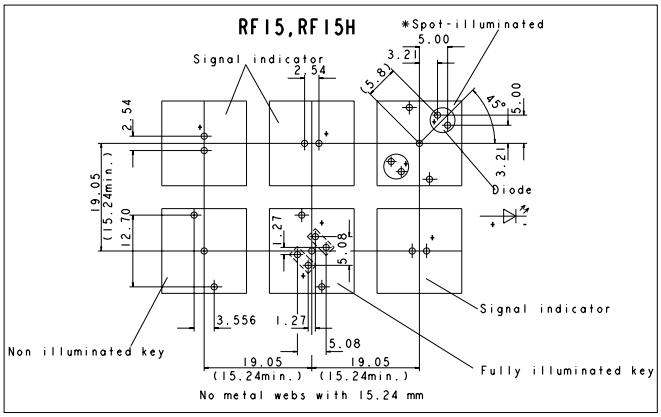

Hole Pattern – Front Panel

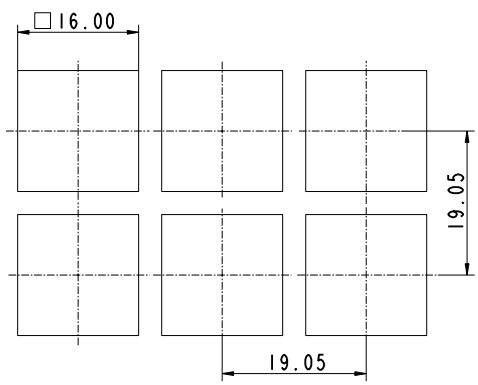

View on component side, all hole diameters 1,1 +/- 0,1 mm

RF 15 short-travel keyswitch, non-illuminated

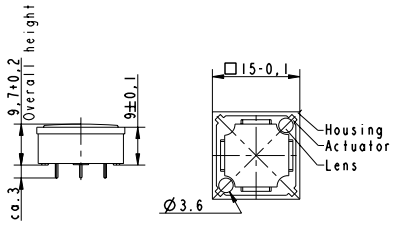

Contact materials	Illumination	Colour of lens	LED colour	LED type	Order no.
Ag	not illuminated	transparent			**3.14.100.006/0000**
Au	not illuminated	transparent			**3.14.100.001/0000**

Technical data see page 4 - 26

Accessories:
Keycap for RF 15, snap-on, for overall height 12.5 mm: 5.46.654.059/0227

For keycaps, refer to chapter accessories and system RK 90.
If exchangeable legends are required, or if an overall height of 12.5 mm is required, a keycap can be mounted on the non-illuminated keys. The keycap legend is visible through a window in the overlay. You can change the legend by replacing the keycap.

Stock items are marked by **bold printed** order numbers.

RF 15 short-travel keyswitch, fully illuminated with 2 LEDs

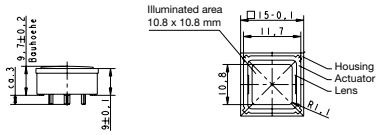

Pict.: red

Contact materials	Illumination	Colour of lens	LED colour	LED type	Order no.
Ag	fully illuminated 2 LEDs	red	red	2 mm	**3.14.200.021/0000**
Ag	fully illuminated 2 LEDs	green	green	2 mm	**3.14.200.022/0000**
Ag	fully illuminated 2 LEDs	yellow	yellow	2 mm	**3.14.200.023/0000**
Ag	fully illuminated 2 LEDs	orange	yellow	2 mm	3.14.200.024/0000
Ag	fully illuminated 2 LEDs	blue	blue	2 mm	3.14.200.025/0000
Au	fully illuminated 2 LEDs	green	green	2 mm	**3.14.200.012/0000**
Au	fully illuminated 2 LEDs	yellow	yellow	2 mm	**3.14.200.013/0000**
Au	fully illuminated 2 LEDs	orange	yellow	2 mm	3.14.200.014/0000
Au	fully illuminated 2 LEDs	blue	blue	2 mm	3.14.200.015/0000

Technical data see page 4 - 26

For keycaps, refer to RK 90 system design.
Technical data of LED see seperate page at the beginning of this chapter.

Stock items are marked by **bold printed** order numbers.

RF 15 short-travel keyswitch, 1 LED spot-illumination

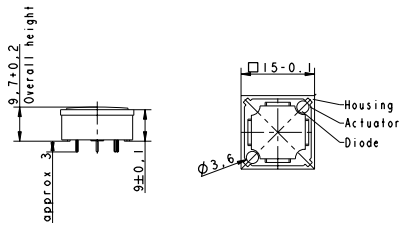

Pict.: red

Contact materials	Illumination	Colour of lens	LED colour	LED type	Order no.
Ag	spot illumination 1 LED	opaque white	blue	3 mm	3.14.100.040/0000
Ag	spot illumination 1 LED	transparent	red	3 mm	**3.14.100.041/0000**
Ag	spot illumination 1 LED	transparent	green	3 mm	**3.14.100.042/0000**
Ag	spot illumination 1 LED	transparent	yellow	3 mm	**3.14.100.043/0000**
Au	spot illumination 1 LED	opaque white	blue	3 mm	3.14.100.030/0000
Au	spot illumination 1 LED	transparent	red	3 mm	**3.14.100.031/0000**
Au	spot illumination 1 LED	transparent	green	3 mm	**3.14.100.032/0000**
Au	spot illumination 1 LED	transparent	yellow	3 mm	**3.14.100.033/0000**

Technical data see page 4 - 26

Double-spot LED illumination available on request
Technical data of LED see seperate page at the beginning of this chapter.

Stock items are marked by **bold printed** order numbers.

RF 15 N short-travel keyswitch

General data

The RF 15N keyswitch provides a minimum overall height of 6.2 mm. The overall height can be varied by extension plungers which are inserted into the cross-like notches on the actuator tops.
LEDs can only be arranged separately next to the keyswitches up to an overall height of 10 mm (i.e. without plunger or with small plunger).
Keyswitches with overall heights of 12 mm or more can be provided with a maximum of 2 LEDs which are inserted into the recesses of the keyswitch housing. LEDs of keyswitches with overall heights of 12.5 mm or more should be placed onto LED spacers in order to obtain satisfactory illumination.

Technical data

General information	
Colour of lens	see order block
Recommended key grid	19.05 mm
Dimensions	
Length	15 mm
Width	15 mm
Overall height	6.2 mm
Mechanical design	
Mounting	soldering into PCB
Terminals	contacts tin-plated, fix contact Ag plated
Contact system	snap-action contact
Contact arrangement	1 NO
Contact materials	Au/Ag
Illumination	external 3 mm LED possible if height ‹ 12 mm
Mechanical characteristics	
Operating force max.	2 ... 3 N
Operating travel	0.5 mm
Switching travel	0.5 mm
Robustness min.	with through-plated PCB 100 N
Electrical characteristics	
Rated voltage min.	Au: 0.02 V, Ag: 3 V
Rated voltage max.	Au: 42 V, Ag: 50 V
Rated current min.	Au: 0,01 mA, Ag: 0,1 mA
Rated current max.	Au: 100 mA, Ag: 250 mA
Rated power max. (ohmic load)	Au: 2 W, Ag: 12.5 W
Contact resistance when new max.	100 mΩ
Contact resistance acc. to life max.	3 Ω
Insulation resistance	10^9 Ω
ESD strength (underneath overlay)	15 kV
Bouncing time max.	5 ms
Other specifications	
Ambient temp. operating min.	-25 °C
Ambient temp. operating max.	+70 °C
Storage temperature min.	-40 °C
Storage temperature max. (product)	+80 °C
Storage temperature max. (in tube)	+50 °C
Resistance to constant environment	according to IEC 600 68-2-3 and 2-30
Resistance at variable environment	according to IEC 600 68-2-14 and 2-33
Operating life min.	1,000,000
Soldering time max.	2,5 sec.
Soldering temperature max.	250 °C
Flammability of materials	UL 94 HB

Force/Travel Diagram – Keyswitch RF 15 N

Operation characteristic limits RF

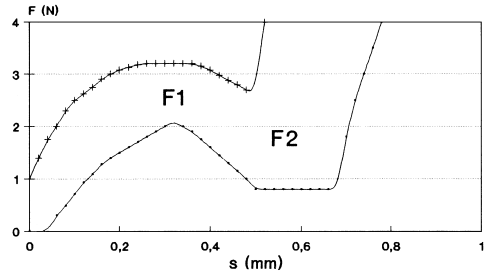

Circuit Diagram – Keyswitch RF 15 N

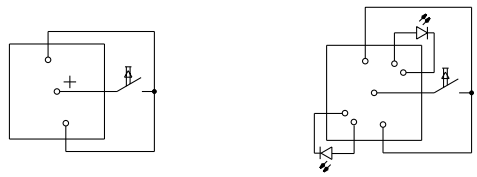

Keyswitch,
non illuminated

Keyswitch,
spot-illuminated

F 1 = Max. operating force
F 2 = Force at contact
F 2 is max. 55% of F 1

Dimensional Drawings RF 15 N

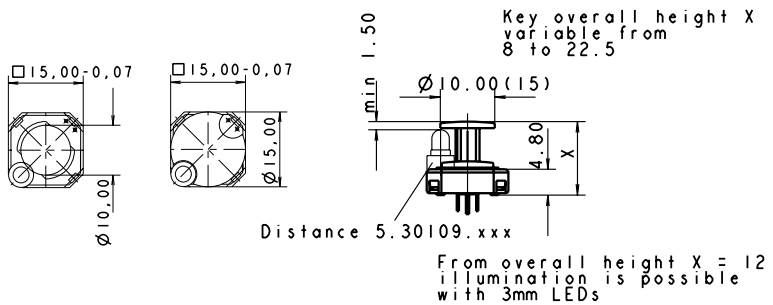

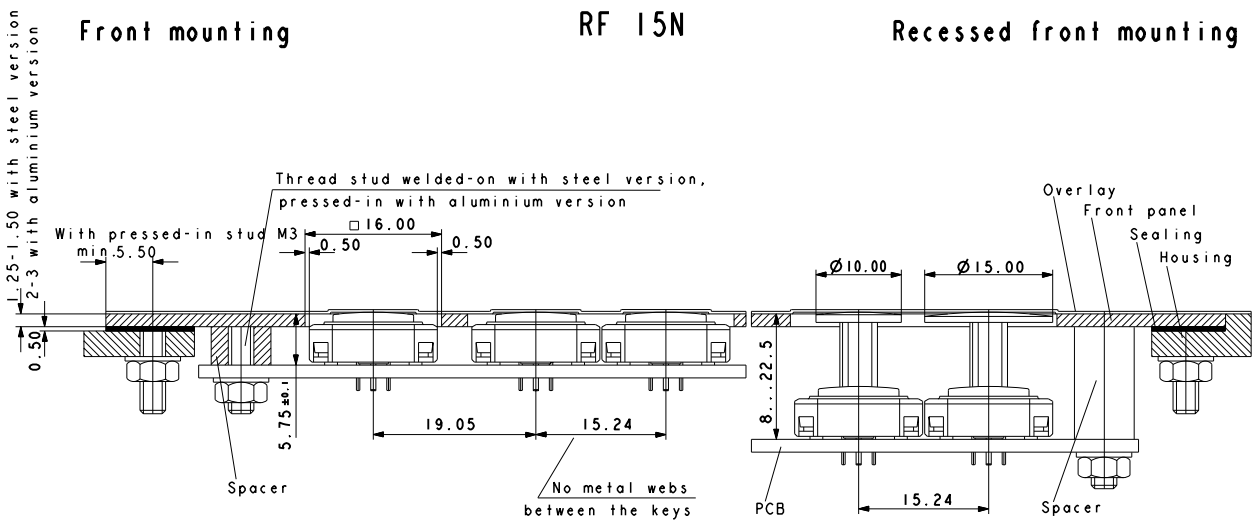

4

RF

Hole Patterns – Front Panel RF 15 N

RF 15 N without plunger

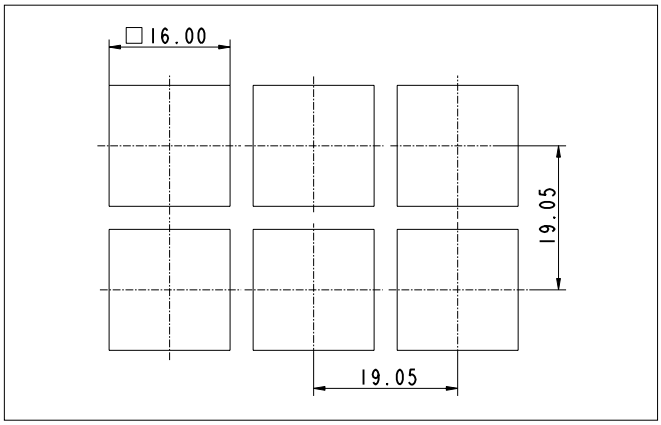

RF 15 N with plunger ø 10 mm, non-illuminated

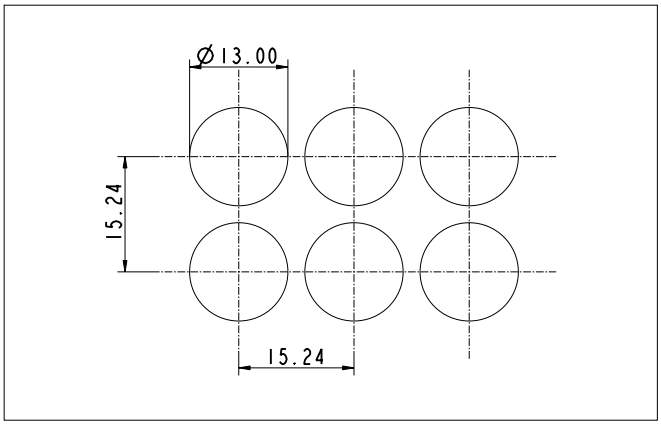

RF 15 N with plunger ø 10 mm, illuminated

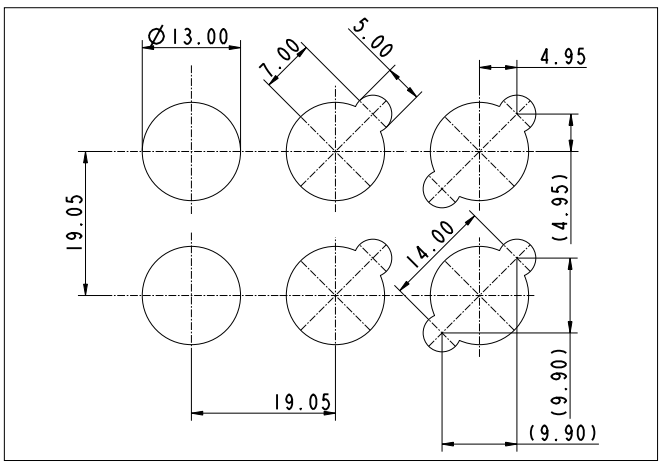

RF 15 N with plunger ø 15 mm, illuminated

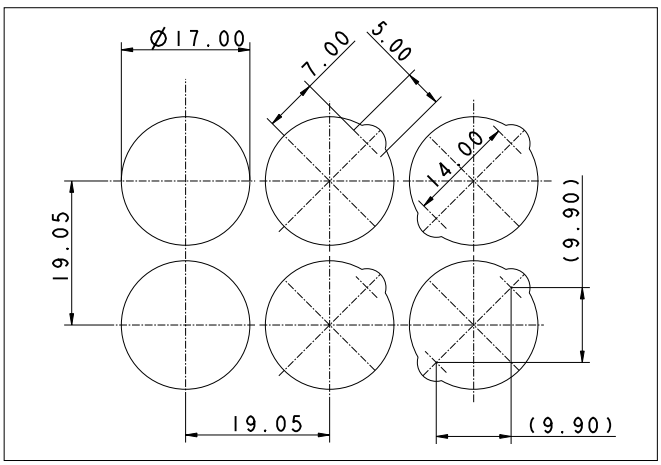

Hole Pattern RF 15 N

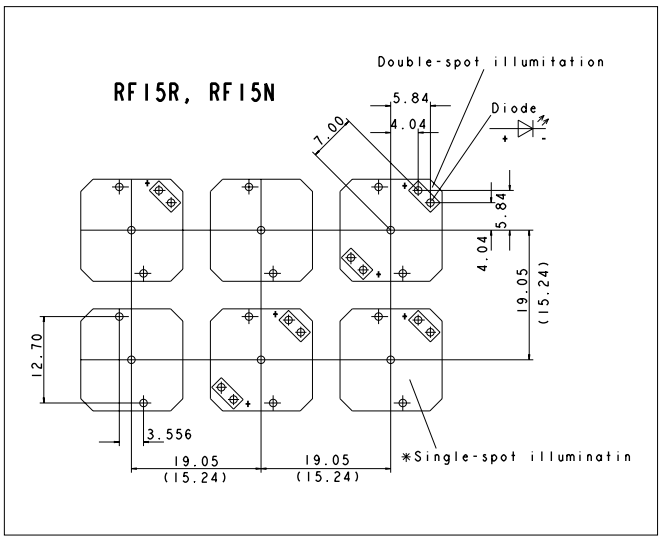

View on component side
All hole diameters 1,1 +/- 0,1 mm
PCB layout Keyswitch 1/400" grid

Accessories RF 15 N short-travel keyswitch

Description	Photo	Order no.	Page
LED yellow, 3mm		1.90.690.103/0000	5 - 20
LED spacer for RF 15 N, Ø 5 mm, spacing length 2.2 mm, light grey, for use with overall height of 12.5 mm		5.30.109.010/0756	
Extension plunger for RF 15 N, Ø 10 mm, overall height 22.5 mm		**5.46.011.028/0710**	
Extension plunger for RF 15 N, Ø 15 mm, overall height 22.5 mm		**5.46.017.028/0710**	

RF 15 N short-travel keyswitch, non-illuminated

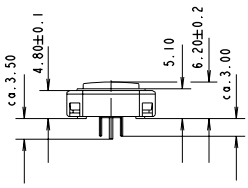

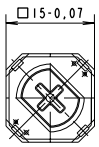

Contact materials	Illumination	Recommended key grid	Overall height	Order no.
Au	external 3 mm LED possible if height < 12 mm	19.05 mm	6.2 mm	**3.14.100.601/0000**
Ag	external 3 mm LED possible if height < 12 mm	19.05 mm	6.2 mm	**3.14.100.606/0000**

Technical data see page 4 - 32

For keycaps, refer to RK 90 system design.
Double-spot LED illumination available on request.

RF 15 R short-travel keyswitch

Pict.: with 2 mm LED, red

with 3 mm LED, green

General data

The round actuator of the RF 15 R keyswitch requires round front panel cut-outs. These make it possible to use a narrow keyboard grid of only 15.24 mm with sufficiently large frame webs between the individual keys. We recommend area embossing over the actuators for the overlay.

Technical data

General information	
Recommended key grid	15.24 mm
Dimensions	
Length	15 mm
Width	15 mm
Overall height	9,7/12,5 mm
Mechanical design	
Mounting	soldering into PCB
Terminals	contacts tin-plated, fix contact Ag plated
Contact system	snap-action contact
Contact arrangement	1 NO
Contact materials	Au/Ag
Illumination	spot illumination
LED colour	see order block
LED type	see order block
Mechanical characteristics	
Operating force max.	2 ... 3 N
Operating travel	0.5 mm
Switching travel	0.5 mm
Robustness min.	with through-plated PCB 100 N
Electrical characteristics	
Rated voltage min.	Au: 0.02 V, Ag: 3 V
Rated voltage max.	Au: 42 V, Ag: 50 V
Rated current min.	Au: 0,01 mA, Ag: 0,1 mA
Rated current max.	Au: 100 mA, Ag: 250 mA
Rated power max. (ohmic load)	Au: 2 W, Ag: 12.5 W
Contact resistance when new max.	100 mΩ
Contact resistance acc. to life max.	3 Ω
Insulation resistance	10^9 Ω
ESD strength (underneath overlay)	15 kV
Bouncing time max.	5 ms
Other specifications	
Ambient temp. operating min.	-25 °C
Ambient temp. operating max.	+70 °C
Storage temperature min.	-40 °C
Storage temperature max. (product)	+80 °C
Storage temperature max. (in tube)	+50 °C
Resistance to constant environment	according to IEC 600 68-2-3 and 2-30
Resistance at variable environment	according to IEC 600 68-2-14 and 2-33
Operating life min.	1,000,000
Soldering time max.	2,5 sec.
Soldering temperature max.	250 °C
Flammability of materials	UL 94 HB

Force/Travel Diagram – Keyswitch RF 15 R

Operation characteristic limits RF

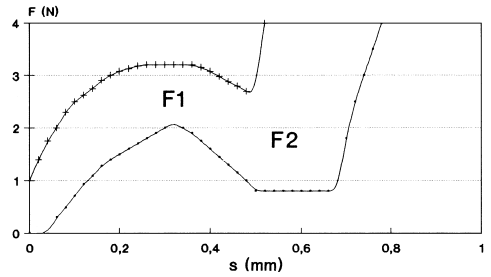

F 1 = Max. operating force
F 2 = Force at contact
F 2 is max. 55% of F 1

Circuit Diagram – Keyswitch RF 15 R

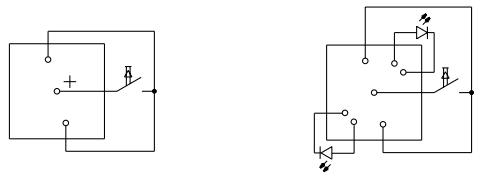

Keyswitch, non-illuminated

Keyswitch, spot-illuminated

Dimensional Drawing RF 15 R

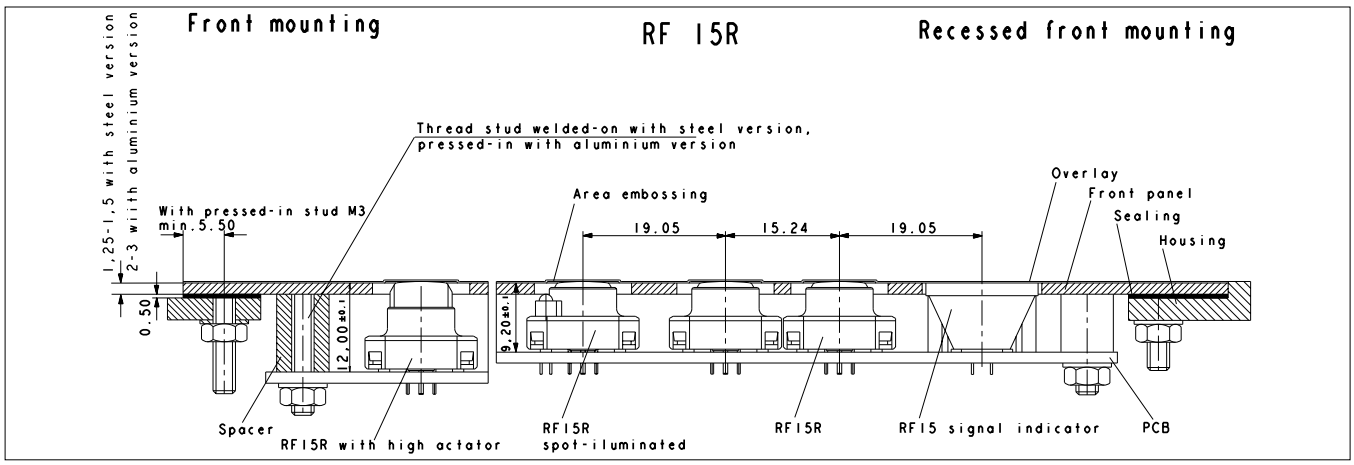

Hole Pattern RF 15 R

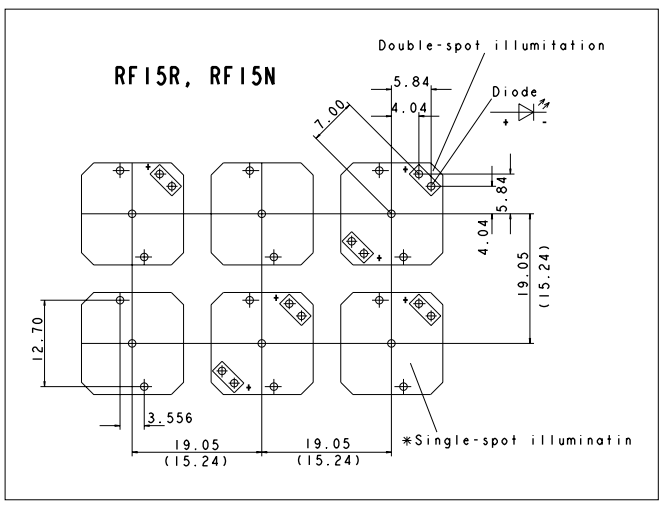

View on component side
All hole diameters 1,1 +/- 0,1 mm
PCB layout Keyswitch 1/400" grid

Hole Pattern – Front Panel RF 15 R

RF 15 R, non-illuminated

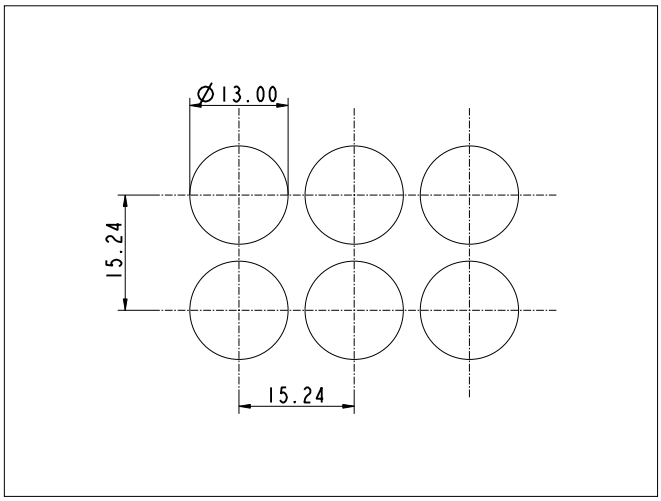

RF 15 R, illuminated

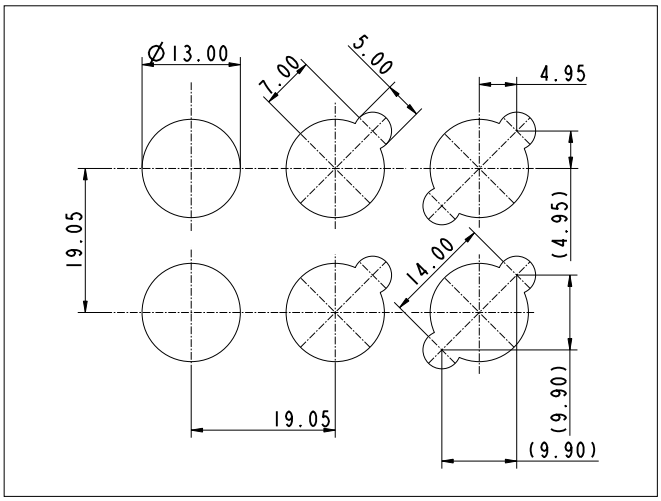

RF 15 R low short-travel keyswitch, non-illuminated

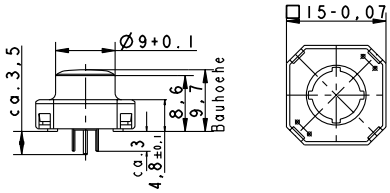

Contact materials	Overall height	Illumination	LED type	LED colour	Order no.
Au	9.7 mm	not illuminated			**3.14.100.501/0000**
Ag	9.7 mm	not illuminated			**3.14.100.506/0000**

Technical data see page 4 - 36

RF 15 R high short-travel keyswitch, non-illuminated

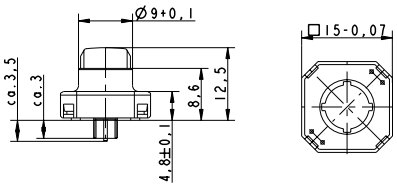

Contact materials	Overall height	Illumination	LED type	LED colour	Order no.
Au	12.5 mm	not illuminated			**3.14.100.801/0000**
Ag	12.5 mm	not illuminated			**3.14.100.806/0000**

Technical data see page 4 - 36

Stock items are marked by **bold printed** order numbers.

RF 15 R low short-travel keyswitch, 1 LED spot-illumination

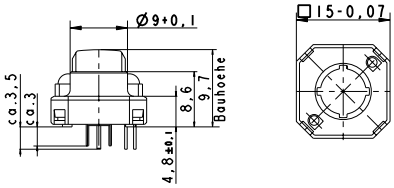

Pict.: with 2 mm LED, red

Contact materials	Overall height	Illumination	LED type	LED colour	Order no.
Au	9.7 mm	spot illumination 1 LED	2 mm	red	**3.14.100.531/0000**
Au	9.7 mm	spot illumination 1 LED	2 mm	green	**3.14.100.532/0000**
Au	9.7 mm	spot illumination 1 LED	2 mm	yellow	**3.14.100.533/0000**
Ag	9.7 mm	spot illumination 1 LED	2 mm	red	3.14.100.541/0000
Ag	9.7 mm	spot illumination 1 LED	2 mm	green	3.14.100.542/0000
Ag	9.7 mm	spot illumination 1 LED	2 mm	yellow	3.14.100.543/0000

Technical data see page 4 - 36

Versions with 2 LEDs available on request.
Technical data of LED see seperate page at the beginning of this chapter.

Stock items are marked by **bold printed** order numbers.

RF 15 R high short-travel keyswitch, 1 LED spot-illumination

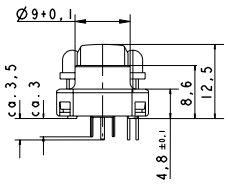

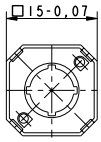

Pict.: with 3 mm LED, green

Contact materials	Overall height	Illumination	LED type	LED colour	Order no.
Au	12.5 mm	spot illumination 1 LED	3 mm	blue	3.14.100.830/0000
Au	12.5 mm	spot illumination 1 LED	3 mm	red	3.14.100.831/0000
Au	12.5 mm	spot illumination 1 LED	3 mm	green	3.14.100.832/0000
Au	12.5 mm	spot illumination 1 LED	3 mm	yellow	3.14.100.833/0000
Ag	12.5 mm	spot illumination 1 LED	3 mm	blue	3.14.100.840/0000
Ag	12.5 mm	spot illumination 1 LED	3 mm	red	3.14.100.841/0000
Ag	12.5 mm	spot illumination 1 LED	3 mm	green	3.14.100.842/0000
Ag	12.5 mm	spot illumination 1 LED	3 mm	yellow	3.14.100.843/0000

Technical data see page 4 - 36

Versions with 2 LEDs available on request.
Technical data of LED see seperate page at the beginning of the chapter.

Stock items are marked by **bold printed** order numbers.

RF 15 H short-travel keyswitch

General data

Application notes:
The RF 15 H key has an overall height of 12.5 mm and can be fully illuminated. When designing membrane keyboards, we recommend using a key grid of at least 19.05 mm and a 0.13 mm overlay with area embossing over the keys.
You can use the O-ring (accessory) to block the key and use it as an indicator field or blank spaceholder.

Technical data

General information	
Colour of lens	see order block
Recommended key grid	20 mm
Dimensions	
Length	15 mm
Width	15 mm
Overall height	12.5 mm
Mechanical design	
Mounting	soldering into PCB
Terminals	see order block
Contact system	snap-action contact
Contact arrangement	1 NO
Contact materials	Au/Ag
Illumination	not illuminated / fully illuminated
LED colour	see order block
LED type	see order block
Mechanical characteristics	
Operating force max.	2 ... 3 N
Operating travel	0.5 mm
Switching travel	0.5 mm
Robustness min.	with through-plated PCB 100 N
Electrical characteristics	
Rated voltage min.	Au: 0.02 V, Ag: 3 V
Rated voltage max.	Au: 42 V, Ag: 50 V
Rated current min.	Au: 0,01 mA, Ag: 0,1 mA
Rated current max.	Au: 100 mA, Ag: 250 mA
Rated power max. (ohmic load)	Au: 2 W, Ag: 12.5 W
Contact resistance when new max.	100 mΩ
Contact resistance acc. to life max.	3 Ω
Insulation resistance	10^9 Ω
ESD strength (underneath overlay)	15 kV
Bouncing time max.	5 ms
Other specifications	
Ambient temp. operating min.	-25 °C
Ambient temp. operating max.	+70 °C
Storage temperature min.	-40 °C
Storage temperature max. (product)	+80 °C
Storage temperature max. (in tube)	+50 °C
Resistance to constant environment	according to IEC 600 68-2-3 and 2-30
Resistance at variable environment	according to IEC 600 68-2-14 and 2-33
Operating life min.	1,000,000
Soldering time max.	2,5 sec.
Soldering temperature max.	250 °C
Flammability of materials	UL 94 HB

Force/Travel Diagram – Keyswitch RF 15 H

Operation characteristic limits RF

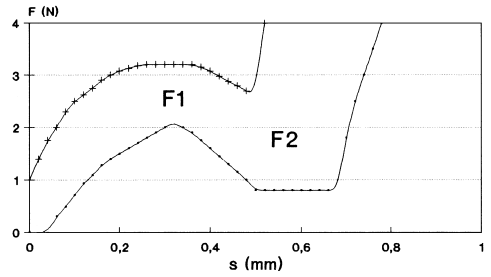

F 1 = Max. operating force
F 2 = Force at contact
F 2 is max. 55% of F 1

Circuit Diagram – Keyswitch RF 15 H

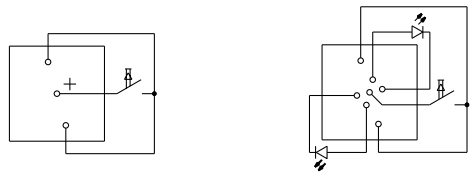

Keyswitch, non-illuminated

Keyswitch, fully illuminated

Dimensional Drawing

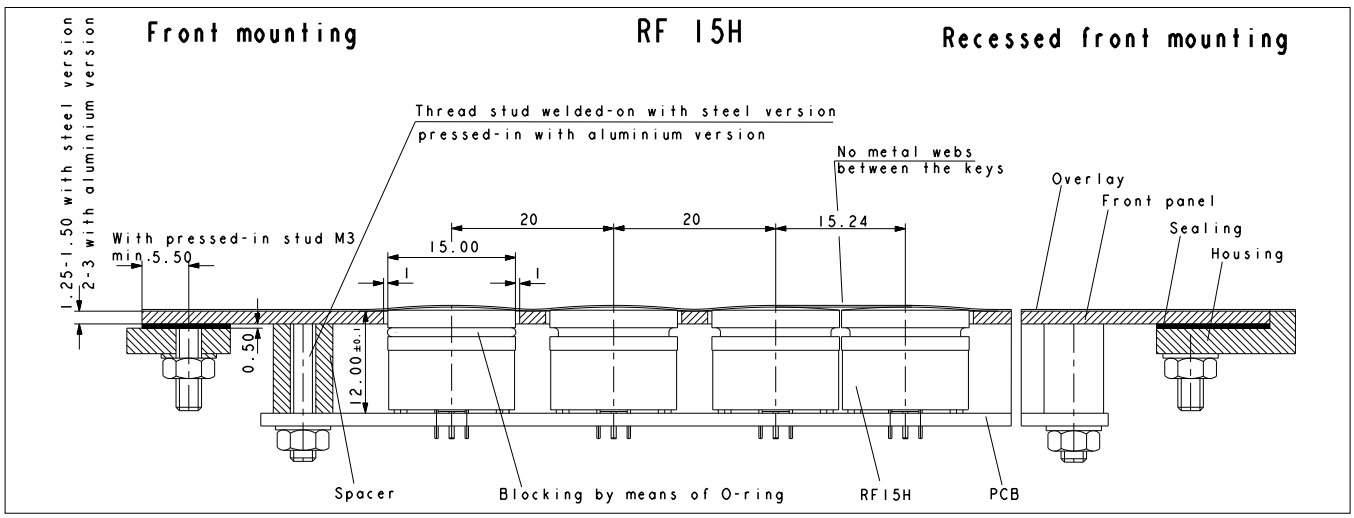

Hole Pattern

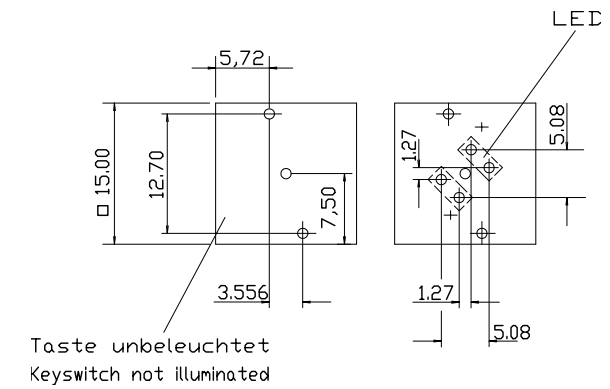

No metal webs with 15.24 mm. View on component side.
All hole diameters 1,1 +/- 0,1 mm. PCB layout Keyswitch 1/400" grid.

Hole Pattern – Front Panel

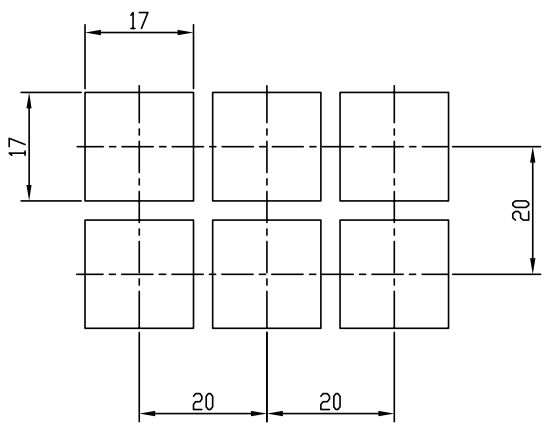

Accessories RF 15 H short-travel keyswitch

Description	Photo	Order no.	Page
O-ring, black, for blocking the operating stroke		**5.30.120.009/0100**	5 - 27

RF 15 H short-travel keyswitch, non-illuminated

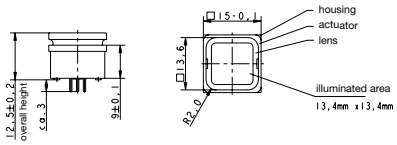

Contact materials	Illumination	Colour of lens	LED colour	LED type	Order no.
Au	not illuminated	white			**3.14.100.702/0000**
Ag	not illuminated	white			**3.14.100.707/0000**

Technical data see page 4 - 42

Stock items are marked by **bold printed** order numbers.

RF 15 H short-travel keyswitch, fully illuminated

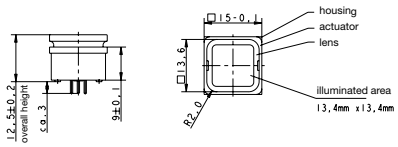

Pict.: yellow

Contact materials	Illumination	Colour of lens	LED colour	LED type	Order no.
Au	fully illuminated 2 LEDs	red	red	2 mm	**3.14.200.731/0000**
Au	fully illuminated 2 LEDs	green	green	2 mm	**3.14.200.732/0000**
Au	fully illuminated 1 LED	green	green super bright	3 mm	**3.14.200.736/0000**
Au	fully illuminated 2 LEDs	yellow	yellow	2 mm	**3.14.200.733/0000**
Au	fully illuminated 1 LED	white	white	3 mm	**3.14.200.735/0000**
Au	fully illuminated 2 LEDs	orange	yellow	2 mm	**3.14.200.738/0000**
Au	fully illuminated 1 LED	blue	blue	3 mm	**3.14.200.739/0000**
Au	fully illuminated 2 LEDs	white	multi colour	3 mm	3.14.100.734/0000
Ag	fully illuminated 2 LEDs	red	red	2 mm	**3.14.200.741/0000**
Ag	fully illuminated 2 LEDs	green	green	2 mm	**3.14.200.742/0000**
Ag	fully illuminated 1 LED	green	green super bright	3 mm	**3.14.200.746/0000**
Ag	fully illuminated 2 LEDs	yellow	yellow	2 mm	**3.14.200.743/0000**
Ag	fully illuminated 1 LED	white	white	3 mm	**3.14.200.745/0000**
Ag	fully illuminated 2 LEDs	orange	yellow	2 mm	**3.14.200.748/0000**
Ag	fully illuminated 1 LED	blue	blue	3 mm	**3.14.200.749/0000**
Ag	fully illuminated 2 LEDs	white	multi colour	3 mm	3.14.100.744/0000

Technical data see page 4 - 42

When using the keyswitches with multicolour LEDs the illumination colour can be varied from red to green by change of polarity. Due to the frequency of the polarity-changes the colours red, green, yellow as well as all secondary colours from these are possible.
Technical data of LED see seperate page of the beginning of this chapter.

Stock items are marked by **bold printed** order numbers.

RF 15 signal indicator

Pict.: green

Technical data

General information

Colour of lens	see order block
Recommended key grid	19.05 mm

Dimensions

Length	15 mm
Width	15 mm
Overall height	9.7 mm

Mechanical design

Mounting	soldering into PCB
Illumination	fully illuminated 1 LED
LED colour	see order block
LED type	2 mm

Other specifications

Ambient temp. operating min.	-25 °C
Ambient temp. operating max.	+70 °C
Storage temperature min.	-40 °C
Storage temperature max. (product)	+80 °C
Storage temperature max. (in tube)	+50 °C
Resistance to constant environment	according to IEC 600 68-2-3 and 2-30
Resistance at variable environment	according to IEC 600 68-2-14 and 2-33
Soldering time max.	2,5 sec.
Soldering temperature max.	250 °C
Flammability of materials	UL 94 HB

Dimensional Drawing Signal Indicator RF 15

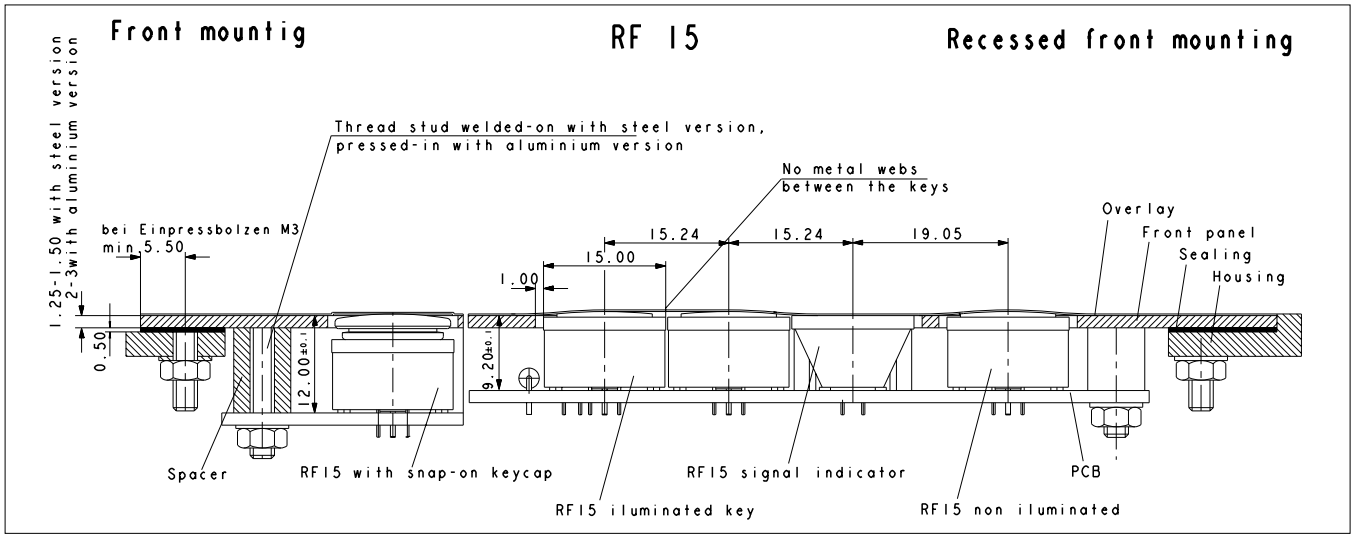

Hole Pattern

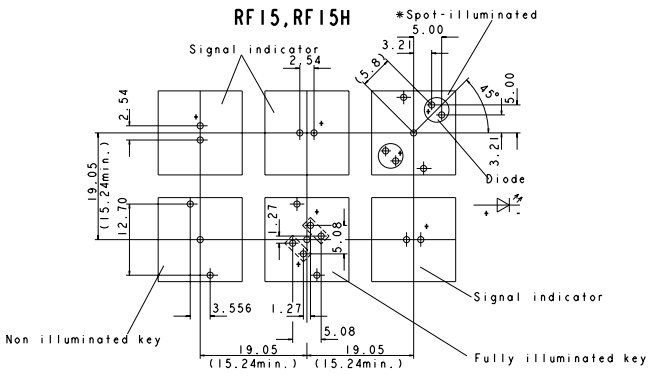

No metal webs with 15.24 mm. View on component side.
All hole diameters 1,1 +/- 0,1 mm.

Hole Pattern – Front Panel

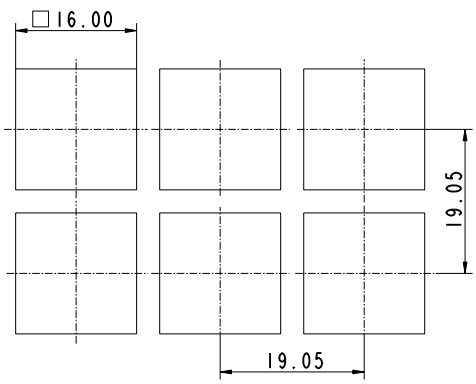

4

RF

RF 15 signal indicator, fully illuminated, 1 LED

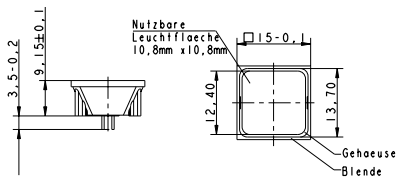

Pict.: green

Overall height	Illumination	Colour of lens	LED colour	LED type	Order no.
9.7 mm	fully illuminated 1 LED	red	red	2 mm	**3.14.200.051/0000**
9.7 mm	fully illuminated 1 LED	green	green	2 mm	**3.14.200.052/0000**
9.7 mm	fully illuminated 1 LED	yellow	yellow	2 mm	**3.14.200.053/0000**
9.7 mm	fully illuminated 1 LED	orange	yellow	2 mm	3.14.200.054/0000
9.7 mm	fully illuminated 1 LED	blue	blue	2 mm	3.14.200.055/0000

Technical data see page 4 - 46

For more information, see LEDs.
Technical data of LED see seperate page of the beginning of this chapter.

Stock items are marked by **bold printed** order numbers.

RF 19 short-travel keyswitch

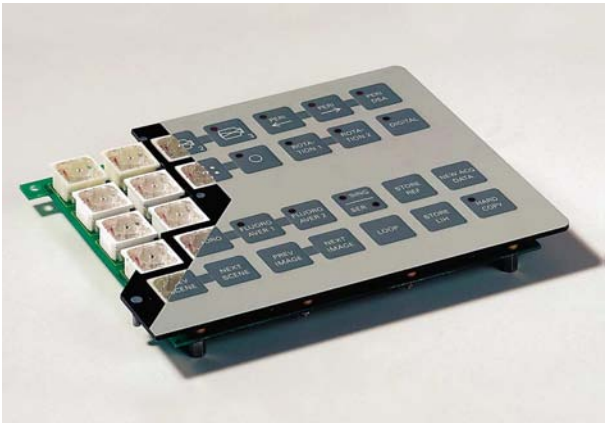

General data

Application notes:
RF 19 keys offer a large actuation area. When designing low-profile keyboards with a grid of >= 23 mm, frame webs remain free between the individual keys.
The overlay can be glued onto these frame webs; we recommend area embossing over the keys for the overlay.

Technical data

General information	
Colour of lens	see order block
Recommended key grid	23 mm
Dimensions	
Length	19.05 mm
Width	19.05 mm
Overall height	9.7 mm
Mechanical design	
Mounting	soldering into PCB
Terminals	contacts tin-plated, fix contact Ag plated
Contact system	snap-action contact
Contact arrangement	1 NO
Contact materials	Au/Ag
Illumination	spot-/fully illuminated
LED colour	see order block
LED type	see order block
Mechanical characteristics	
Operating force max.	2 ... 3 N
Operating travel	0.5 mm
Switching travel	0.5 mm
Robustness min.	with through-plated PCB 100 N
Electrical characteristics	
Rated voltage min.	Au: 0.02 V, Ag: 3 V
Rated voltage max.	Au: 42 V, Ag: 50 V
Rated current min.	Au: 0,01 mA, Ag: 0,1 mA
Rated current max.	Au: 100 mA, Ag: 250 mA
Rated power max. (ohmic load)	Au: 2 W, Ag: 12.5 W
Contact resistance when new max.	100 mΩ
Contact resistance acc. to life max.	3 Ω
Insulation resistance	10^9 Ω
ESD strength (underneath overlay)	15 kV
Bouncing time max.	5 ms
Other specifications	
Ambient temp. operating min.	-25 °C
Ambient temp. operating max.	+70 °C
Storage temperature min.	-40 °C
Storage temperature max. (product)	+80 °C
Storage temperature max. (in tube)	+50 °C
Resistance to constant environment	according to IEC 600 68-2-3 and 2-30
Resistance at variable environment	according to IEC 600 68-2-14 and 2-33
Operating life min.	1,000,000
Soldering time max.	2,5 sec.
Soldering temperature max.	250 °C
Flammability of materials	UL 94 HB

Force/Travel Diagram – Keyswitch RF 19

Operation characteristic limits RF

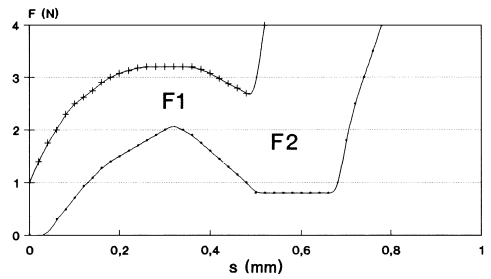

Circuit Diagram – Keyswitch RF 19

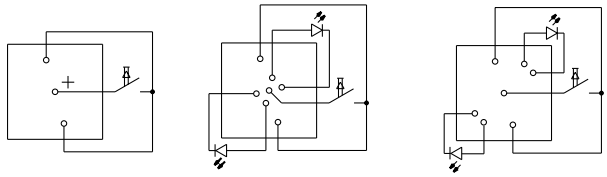

Keyswitch, non-illuminated | Keyswitch, fully illuminated | Keyswitch, spot-illuminated

F 1 = Max. operating force
F 2 = Force at contact
F 2 is max. 55% of F 1

Dimensional Drawing

Front mounting — RF 19 — Recessed front mounting

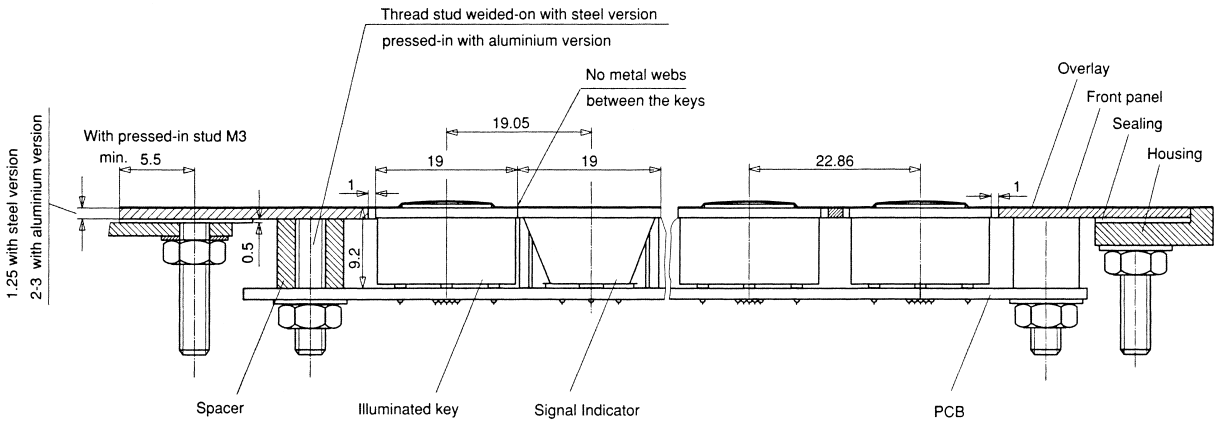

4

RF

Hole Patterns RF 19

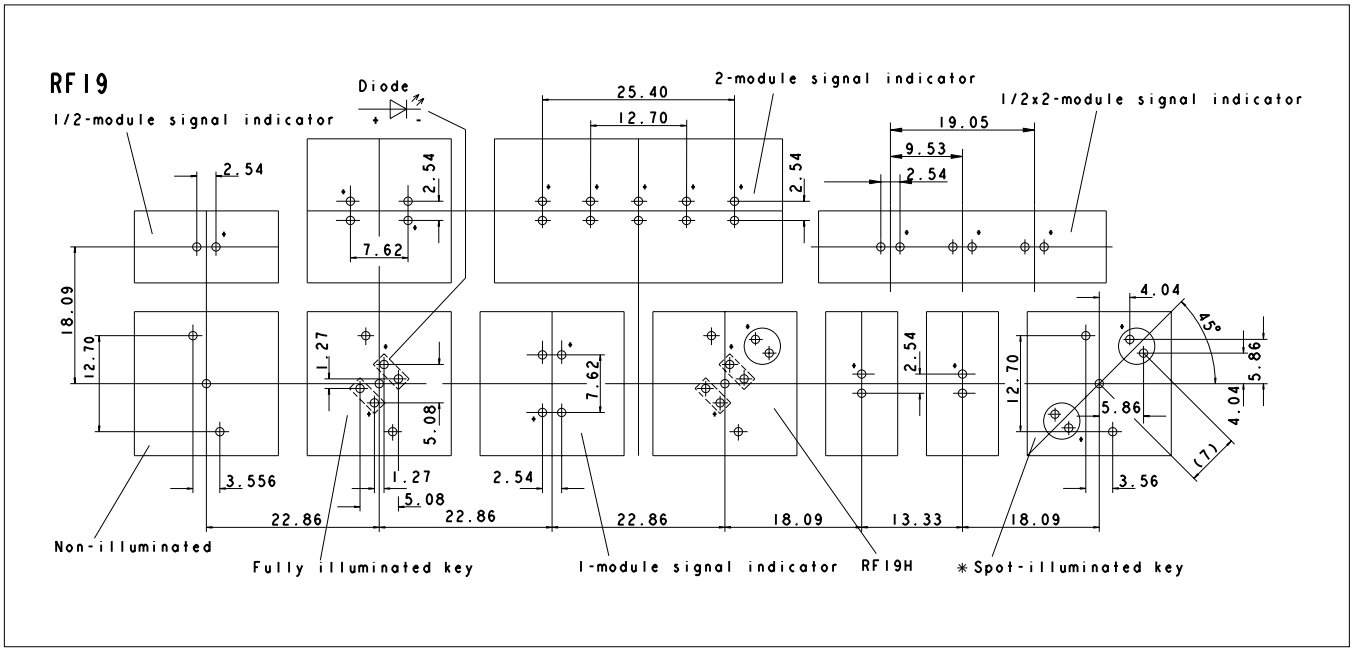

* The LED may be positioned either on the left-hand or right-hand side.
Standard version: LED on left-hand side
View on component side, all hole diameters 1,1 +/- 0,1 mm

Hole Patterns – Front Panel RF 19

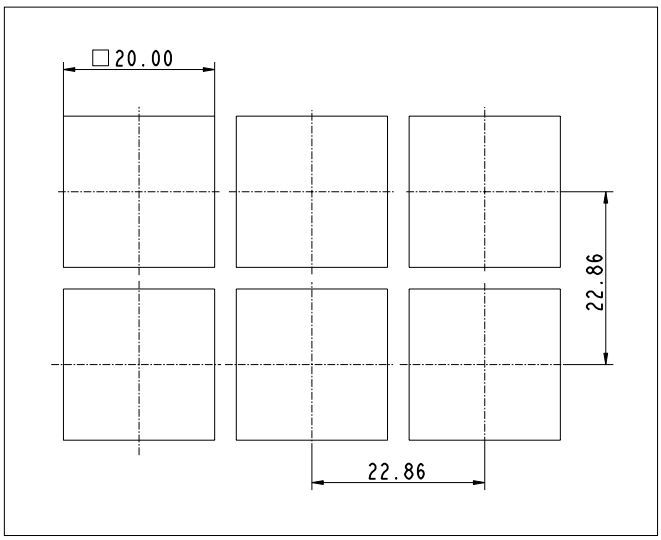

RF 19 short-travel keyswitch, non-illuminated

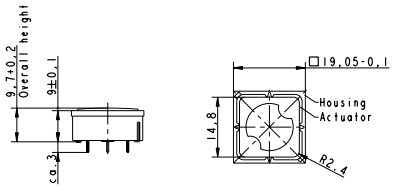

Contact materials	Illumination	Colour of lens	LED colour	LED type	Order no.
Au	not illuminated	transparent			**3.14.001.001/0000**
Ag	not illuminated	transparent			**3.14.001.006/0000**

Technical data see page 4 - 50

Stock items are marked by **bold printed** order numbers.

RF 19 short-travel keyswitch, fully illuminated with 2 LEDs

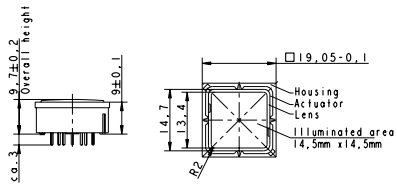

Contact materials	Illumination	Colour of lens	LED colour	LED type	Order no.
Au	fully illuminated 2 LEDs	red	red	2 mm	**3.14.002.011/0000**
Au	fully illuminated 2 LEDs	green	green	2 mm	**3.14.002.012/0000**
Au	fully illuminated 2 LEDs	yellow	yellow	2 mm	**3.14.002.013/0000**
Au	fully illuminated 2 LEDs	orange	yellow	2 mm	3.14.002.014/0000
Au	fully illuminated 2 LEDs	blue	blue	2 mm	3.14.002.015/0000
Ag	fully illuminated 2 LEDs	red	red	2 mm	3.14.002.021/0000
Ag	fully illuminated 2 LEDs	green	green	2 mm	3.14.002.022/0000
Ag	fully illuminated 2 LEDs	yellow	yellow	2 mm	3.14.002.023/0000
Ag	fully illuminated 2 LEDs	orange	yellow	2 mm	3.14.002.024/0000
Ag	fully illuminated 2 LEDs	blue	blue	2 mm	3.14.002.025/0000

Technical data see page 4 - 50

Technical data of LED see seperate page of the beginning of this chapter.

Stock items are marked by **bold printed** order numbers.

RF 19 short-travel keyswitch, 1 LED spot-illumination

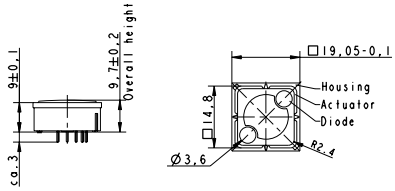

Pict.: red

Contact materials	Illumination	Colour of lens	LED colour	LED type	Order no.
Au	spot illumination 1 LED	opaque white	blue	3 mm	3.14.001.030/0000
Au	spot illumination 1 LED	transparent	red	3 mm	**3.14.001.031/0000**
Au	spot illumination 1 LED	transparent	green	3 mm	**3.14.001.032/0000**
Au	spot illumination 1 LED	transparent	yellow	3 mm	**3.14.001.033/0000**
Ag	spot illumination 1 LED	opaque white	blue	3 mm	3.14.001.040/0000
Ag	spot illumination 1 LED	transparent	red	3 mm	**3.14.001.041/0000**
Ag	spot illumination 1 LED	transparent	green	3 mm	**3.14.001.042/0000**
Ag	spot illumination 1 LED	transparent	yellow	3 mm	**3.14.001.043/0000**

Technical data see page 4 - 50

Versions with 2 LEDs available on request.
Technical data of LED see seperate page of the beginning of this chapter.

Stock items are marked by **bold printed** order numbers.

RF 19 short-travel keyswitch, 1 NC + 1 NO

Technical data

General information	
Recommended key grid	23 mm
Dimensions	
Length	19.05 mm
Width	19.05 mm
Overall height	9.7 mm
Mechanical design	
Mounting	soldering into PCB
Terminals	contacts tin-plated, fix contact Ag plated
Contact system	bridge contact
Contact arrangement	1 NC + 1 NO
Contact materials	Au/Ag
Illumination	none
Mechanical characteristics	
Operating force max.	2 ... 3 N
Operating travel	0.5 mm
Switching travel	0.5 mm
Robustness min.	with through-plated PCB 100 N
Electrical characteristics	
Rated voltage min.	Au: 0,02 V, Ag: 3 V V
Rated voltage max.	Au: 42 V, Ag: 50 V V
Rated current min.	Au: 0,01 mA, Ag: 0,1 mA mA
Rated current max.	Au: 100 mA, Ag: 250 mA mA
Rated power max. (ohmic load)	Au: 2 W, Ag: 12.5 W

For keycaps, refer to RK 90.

Contact resistance when new max.	100 mΩ
Contact resistance acc. to life max.	3 Ω
Insulation resistance	2 x 10^6 Ω
ESD strength (underneath overlay)	15 kV
Bouncing time max.	5 ms
Other specifications	
Ambient temp. operating min.	-25 °C
Ambient temp. operating max.	+70 °C
Storage temperature min.	-40 °C
Storage temperature max. (product)	+80 °C
Storage temperature max. (in tube)	+50 °C
Resistance to constant environment	according to IEC 600 68-2-3 and 2-30
Resistance at variable environment	according to IEC 600 68-2-14 and 2-33
Operating life min.	100000
Soldering time max.	5 sec.
Soldering temperature max.	265 °C
Flammability of materials	UL 94 HB

Circuit Diagram

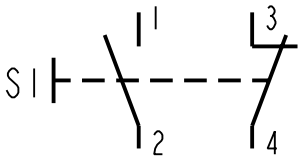

Dimensional Drawing

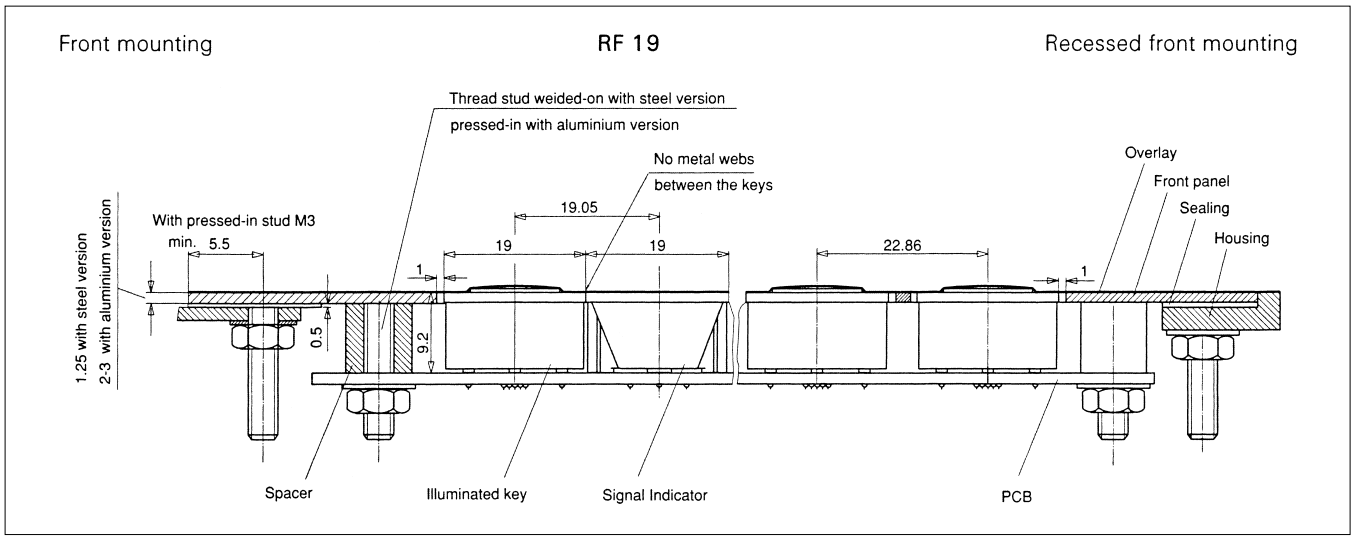

Hole Pattern

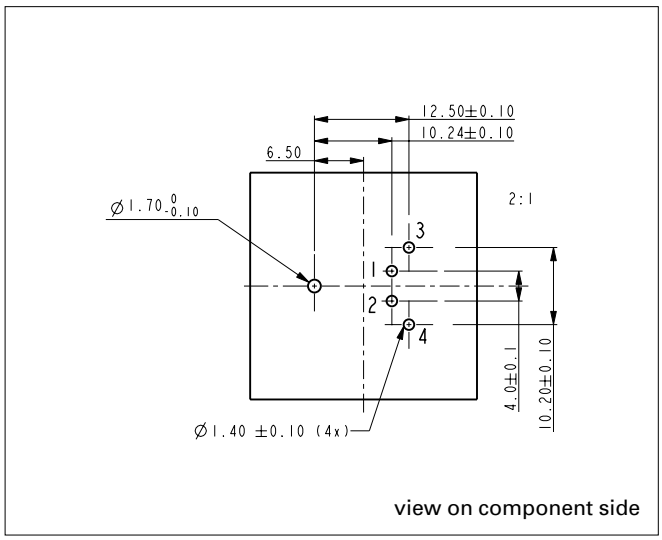

Hole Pattern – Front Panel

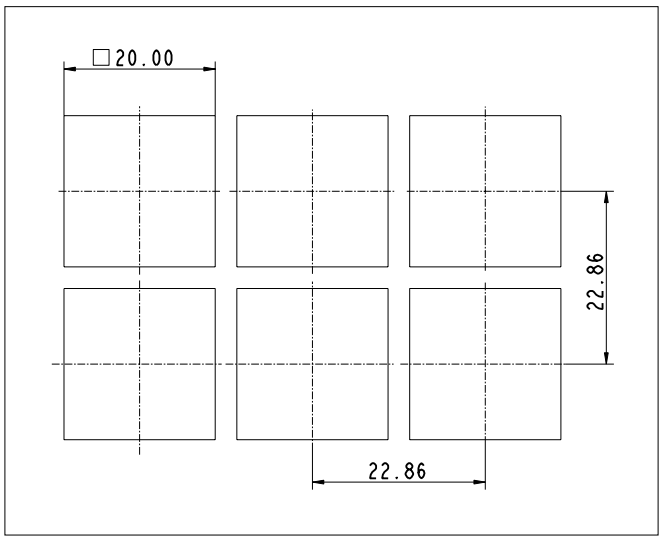

4

RF

RF 19 short-travel keyswitch, non-illuminated

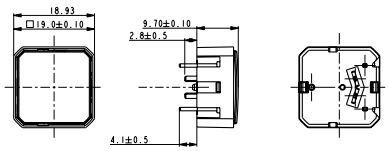

Contact materials	Contact arrangement	Illumination	Colour of lens	Order no.
Au	1 NC + 1 NO	not illuminated	opaque white	1.16.000.991/0000
Ag	1 NC + 1 NO	not illuminated	opaque white	1.16.000.990/0000

Technical data see page 4 - 56

Stock items are marked by **bold printed** order numbers.

RF 19 H short-travel keyswitch

General data

Application notes:
The RF 19H key has an overall height of 12.5 mm and can be fully illuminated. When designing membrane keyboards, we recommend using a key grid of at least 23 mm and a 0.13 mm overlay with area embossing over the keys.
You can use the O-ring (accessory) to block the key and use it as an indicator field or blank spaceholder.

Technical data

General information	
Colour of lens	see order block
Recommended key grid	24 mm
Dimensions	
Length	19.05 mm
Width	19.05 mm
Overall height	12.5 mm
Mechanical design	
Mounting	soldering into PCB
Terminals	contacts tin-plated, fix contact Ag plated
Contact system	snap-action contact
Contact arrangement	1 NO
Contact materials	Au/Ag
Illumination	spot-/fully illuminated
LED colour	see order block
LED type	see order block
Mechanical characteristics	
Operating force max.	2 ... 3 N
Operating travel	0.5 mm
Switching travel	0.5 mm
Robustness min.	with through-plated PCB 100 N
Electrical characteristics	
Rated voltage min.	Au: 0.02 V, Ag: 3 V
Rated voltage max.	Au: 42 V, Ag: 50 V
Rated current min.	Au: 0,01 mA, Ag: 0,1 mA
Rated current max.	Au: 100 mA, Ag: 250 mA
Rated power max. (ohmic load)	Au: 2 W, Ag: 12.5 W
Contact resistance when new max.	100 mΩ
Contact resistance acc. to life max.	3 Ω
Insulation resistance	10^9 Ω
ESD strength (underneath overlay)	15 kV
Bouncing time max.	5 ms
Other specifications	
Ambient temp. operating min.	-25 °C
Ambient temp. operating max.	+70 °C
Storage temperature min.	-40 °C
Storage temperature max. (product)	+80 °C
Storage temperature max. (in tube)	+50 °C
Resistance to constant environment	according to IEC 600 68-2-3 and 2-30
Resistance at variable environment	according to IEC 600 68-2-14 and 2-33
Operating life min.	1,000,000
Soldering time max.	2,5 sec.
Soldering temperature max.	250 °C
Flammability of materials	UL 94 HB

Force/Travel Diagram – Keyswitch RF 19 H

Operation characteristic limits RF

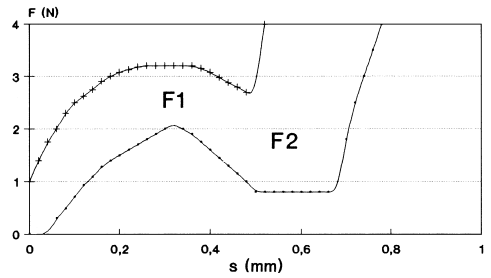

Circuit Diagram – Keyswitch RF 19 H

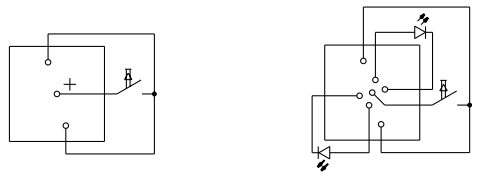

Keyswitch,
non illuminated

Keyswitch,
fully illuminated

F 1 = Max. operating force
F 2 = Force at contact
F 2 is max. 55% of F 1

Dimensional Drawing

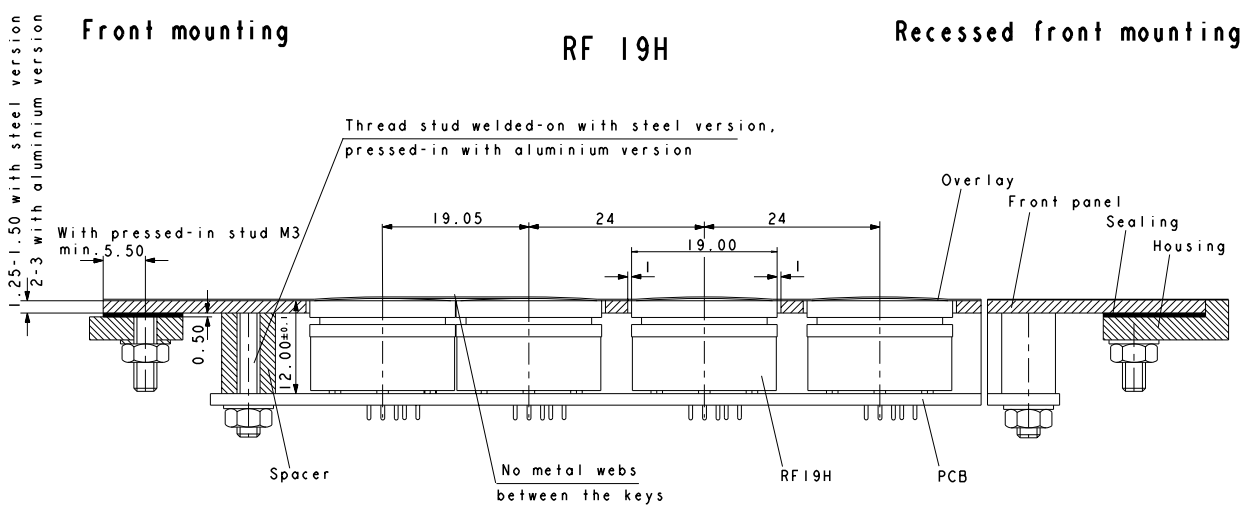

4

RF