Series 31

Characteristics
The compact 16 mm Series 31 is especially suited for:

- Raised design
- PCB (with adaptor)

This series is ideally suited for combined use with Series 51.

Functions
The Series 31 incorporates the following functions:

- Indicator
- Pushbutton
- Illuminated pushbutton
- Buzzer

Market segments
The EAO Series 31 is especially suited for applications in the segments:

- Machinery and Automation
- Panel building

Please refer to the EAO website to obtain detailed information regarding this series **www.products.eao.com**
Configure a product to your exact needs and request a quotation.

Overview

Raised design	
Indicator	4
Buzzer	6
Illuminated pushbutton	7
Accessoires	**11**
Drawings	**23**
Technical data	**24**
Marking	**27**
Guidelines for use	**28**
Index	**29**

31 Raised design

Indicator, IP 40

Product can differ from the current configuration.

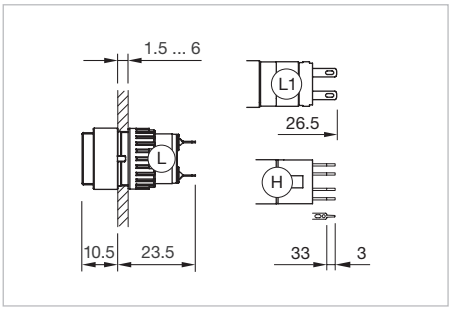

Dimensions [mm]
H = Universal terminal 2.0 x 0.5 mm,
L = Solder terminal,
L1 = Solder terminal 2.8 x 0.5 mm

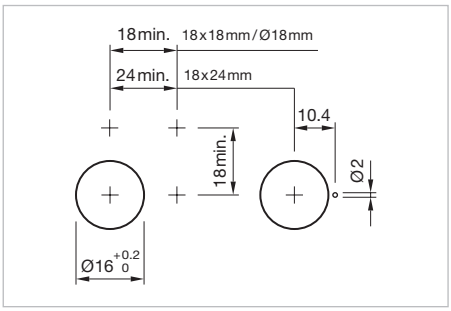

Mounting cut-outs [mm]

Equipment consisting of (schematic overview)

Lens page{$l=BR31_AGAE_Druckhau-be_Kunststoff}

Single-LED page{$l=BR31_AGAE_Single-LED}

Actuator

Fixing nut

Each Part Number listed below includes all the black components shown in the 3D-drawing.

To obtain a complete unit, please select the red components from the pages shown.

Diode 1N4007	Terminal	Part No.	Component layout	Wiring diagram	Weight
Indicator actuator, Front dimension 18 x 18 mm					
1	Universal 2.0 x 0.5 mm	**31-703.006**	4	1	0.006 kg
2	Universal 2.0 x 0.5 mm	**31-704.006**	4	2	0.006 kg
	Solder 2.8 x 0.5 mm	**31-050.002**		3	0.004 kg
	Solder	**31-050.005**		3	0.004 kg
	Universal 2.0 x 0.5 mm	**31-051.006**	4	3	0.005 kg
Indicator actuator, Front dimension 18 x 24 mm					
1	Universal 2.0 x 0.5 mm	**31-701.006**	4	1	0.006 kg
2	Universal 2.0 x 0.5 mm	**31-702.006**	4	2	0.006 kg
	Solder 2.8 x 0.5 mm	**31-040.002**		3	0.004 kg
	Solder	**31-040.005**		3	0.004 kg
	Universal 2.0 x 0.5 mm	**31-041.006**	4	3	0.005 kg

Diode 1N4007	Terminal	Part No.	Compo-nent layout	Wiring dia-gram	Weight
Indicator actuator, Front dimension Ø 18 mm					
	Solder 2.8 x 0.5 mm	**31-030.002**		3	0.004 kg
	Solder	**31-030.005**		3	0.004 kg
	Universal 2.0 x 0.5 mm	**31-031.006**	4	3	0.005 kg

The component layouts you will find from page {$l=BR31_KAZE_Zeichnung}

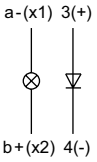 Wiring diagram 1	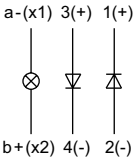 Wiring diagram 2	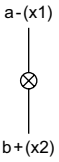 Wiring diagram 3

Buzzer, IP 40

Product can differ from the current configuration.

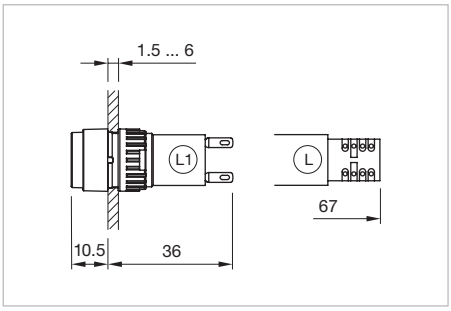

Dimensions [mm]
L = Solder terminal,
L1 = Solder terminal 2.8 x 0.5 mm

Equipment consisting of (schematic overview)

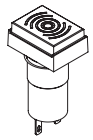

Buzzer

Fixing nut

Each Part Number listed below includes all the black components shown in the 3D-drawing.

To obtain a complete unit, please select the red components from the pages shown.

Additional Information

- Further information see «Technical data»

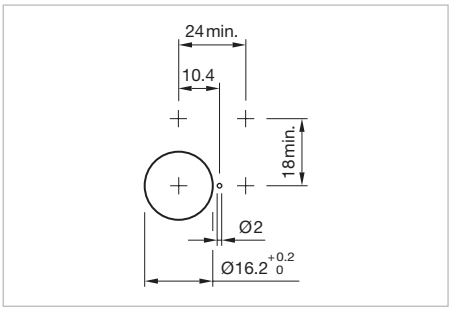

Mounting cut-outs [mm]

Operating voltage	Front cap	Terminal	Part No.	Wiring diagram	Weight
Buzzer, Front dimension 18 x 24 mm					
10 ... 26 VDC	Plastic black	Solder 2.8 x 0.5 mm	**31-801.002**	1	0.015 kg
Buzzer, Front dimension 18 x 24 mm					
10 ... 55 VAC, 10 ... 75 VDC	Plastic black	Solder	**31-810.005**	2	0.015 kg

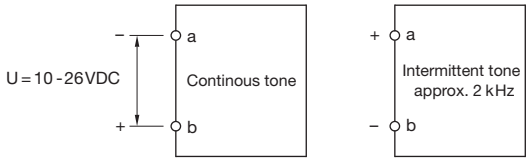

Wiring diagram 1

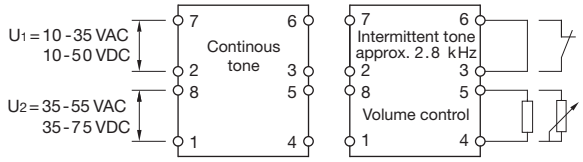

Wiring diagram 12

Illuminated pushbutton, IP 40

Equipment consisting of (schematic overview)

Lens page{$l=BR31_AGAE_Druckhaube_Kunststoff}

Single-LED page{$l=BR31_AGAE_Single-LED}

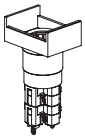

Actuator

Fixing nut

Each Part Number listed below includes all the black components shown in the 3D-drawing.

To obtain a complete unit, please select the red components from the pages shown.

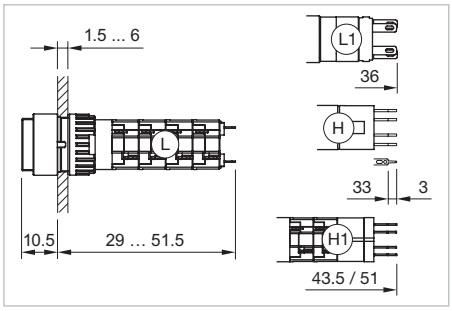

Dimensions [mm]
H = Universal terminal 2.0 x 0.5 mm,
H1 = Universal-Solder terminal,
L = Solder terminal,
L1 = Solder terminal 2.8 x 0.5 mm

Product can differ from the current configuration.

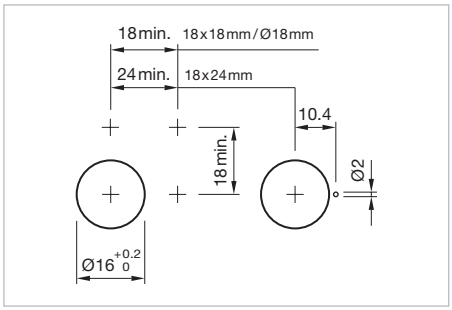

Mounting cut-outs [mm]

Additional Information

- Material of contact Gold

Switching system	Contacts	Diode 1N4007	Switching action	Terminal	Part No.	Compo-nent layout	Wiring diagram	Weight
Illuminated pushbutton actuator, Front dimension 18 x 18 mm								
Low-level element	2 NO		B	Universal 2.0 x 0.5 mm	**31-451.036**	4	9	0.007 kg
			C	Universal 2.0 x 0.5 mm	**31-481.036**	4	10	0.007 kg
	2 NC		B	Universal 2.0 x 0.5 mm	**31-452.036**	4	7	0.007 kg
	1 NC + 1 NO		B	Universal 2.0 x 0.5 mm	**31-453.036**	4	3	0.007 kg
			C	Universal 2.0 x 0.5 mm	**31-483.036**	4	4	0.007 kg
	1 NO		B	Universal 2.0 x 0.5 mm	**31-455.036**	4	5	0.007 kg
			C	Universal 2.0 x 0.5 mm	**31-485.036**	4	6	0.007 kg
	1 NC		B	Universal 2.0 x 0.5 mm	**31-456.036**	4	1	0.007 kg
Snap-action switching element	1 NC + 1 NO	1	B	Universal-Solder	**31-709.0292**	4	11	0.008 kg
		2	B	Universal-Solder	**31-710.0292**	4	13	0.008 kg
		2	C	Universal-Solder	**31-718.0292**	4	14	0.008 kg
			B	Solder 2.8 x 0.5 mm	**31-151.022**		16	0.006 kg
			B	Solder	**31-151.0252**		15	0.006 kg
			C	Solder 2.8 x 0.5 mm	**31-281.022**		18	0.006 kg
			C	Solder	**31-281.0252**		17	0.006 kg
	2 NC + 2 NO		B	Solder	**31-152.0252**		23	0.008 kg
			C	Solder	**31-282.0252**		24	0.008 kg
	3 NC + 3 NO		B	Solder	**31-153.0252**		25	0.010 kg
			C	Solder	**31-283.0252**		26	0.010 kg

31 Raised design

Switching system	Contacts	Diode 1N4007	Switching action	Terminal	Part No.	Compo-nent layout	Wiring diagram	Weight
Snap-action switching element	4 Ö + 4 S		B	Löt	**31-154.0252**		27	0.012 kg
			C	Solder	**31-284.0252**		28	0.012 kg

Illuminated pushbutton actuator, Front dimension 18 x 24 mm

Low-level element	2 NO		B	Universal 2.0 x 0.5 mm	**31-421.036**	4	9	0.007 kg
			C	Universal 2.0 x 0.5 mm	**31-461.036**	4	10	0.007 kg
	2 NC		B	Universal 2.0 x 0.5 mm	**31-422.036**	4	7	0.007 kg
	1 NC + 1 NO		B	Universal 2.0 x 0.5 mm	**31-423.036**	4	3	0.007 kg
			C	Universal 2.0 x 0.5 mm	**31-463.036**	4	4	0.007 kg
	1 NO		B	Universal 2.0 x 0.5 mm	**31-425.036**	4	5	0.007 kg
			C	Universal 2.0 x 0.5 mm	**31-465.036**	4	6	0.007 kg
	1 NC		B	Universal 2.0 x 0.5 mm	**31-426.036**	4	1	0.007 kg
			C	Universal 2.0 x 0.5 mm	**31-466.036**	4	2	0.007 kg
Snap-action switching element	1 NC + 1 NO	1	B	Universal-Solder	**31-705.0292**	4	11	0.008 kg
		1	C	Universal-Solder	**31-713.0292**	4	12	0.008 kg
		2	B	Universal-Solder	**31-706.0292**	4	13	0.008 kg
		2	C	Universal-Solder	**31-714.0292**	4	14	0.008 kg
			B	Solder 2.8 x 0.5 mm	**31-121.022**		16	0.006 kg
			B	Solder	**31-121.0252**		15	0.006 kg
			C	Solder 2.8 x 0.5 mm	**31-261.022**		18	0.006 kg
			C	Solder	**31-261.0252**		17	0.006 kg
	2 NC + 2 NO	1	B	Universal-Solder	**31-707.0292**	4	19	0.010 kg
		1	C	Universal-Solder	**31-715.0292**	4	20	0.010 kg
		2	B	Universal-Solder	**31-708.0292**	4	21	0.010 kg
		2	C	Universal-Solder	**31-716.0292**	4	22	0.010 kg
			B	Solder	**31-122.0252**		23	0.008 kg
			C	Solder	**31-262.0252**		24	0.008 kg
	3 NC + 3 NO		B	Solder	**31-123.0252**		25	0.010 kg
			C	Solder	**31-263.0252**		26	0.010 kg
	4 NC + 4 NO		B	Solder	**31-124.0252**		27	0.012 kg
			C	Solder	**31-264.0252**		28	0.012 kg

Illuminated pushbutton actuator, Front dimension Ø 18 mm

Low-level element	2 NO		B	Universal 2.0 x 0.5 mm	**31-431.036**	4	9	0.007 kg
			C	Universal 2.0 x 0.5 mm	**31-471.036**	4	10	0.007 kg
	2 NC		B	Universal 2.0 x 0.5 mm	**31-432.036**	4	7	0.007 kg
	1 NC + 1 NO		B	Universal 2.0 x 0.5 mm	**31-433.036**	4	3	0.007 kg
			C	Universal 2.0 x 0.5 mm	**31-473.036**	4	4	0.007 kg
	1 NO		B	Universal 2.0 x 0.5 mm	**31-435.036**	4	5	0.007 kg
			C	Universal 2.0 x 0.5 mm	**31-475.036**	4	6	0.007 kg
	1 NC		B	Universal 2.0 x 0.5 mm	**31-436.036**	4	1	0.007 kg
Snap-action switching element	1 NC + 1 NO	2	B	Universal-Solder	**31-744.0292**	4	13	0.008 kg
		2	C	Universal-Solder	**31-748.0292**	4	14	0.008 kg
			B	Solder 2.8 x 0.5 mm	**31-131.022**		16	0.006 kg
			B	Solder	**31-131.0252**		15	0.006 kg
			C	Solder 2.8 x 0.5 mm	**31-271.022**		18	0.006 kg
			C	Solder	**31-271.0252**		17	0.006 kg

Switching system	Contacts	Diode 1N4007	Switching action	Terminal	Part No.	Compo-nent layout	Wiring diagram	Weight
Snap-action switching element	2 NC + 2 NO		B	Solder	**31-132.0252**		23	0.008 kg
			C	Solder	**31-272.0252**		24	0.008 kg
	3 NC + 3 NO		B	Solder	**31-133.0252**		25	0.010 kg
			C	Solder	**31-273.0252**		26	0.010 kg
	4 NC + 4 NO		B	Solder	**31-134.0252**		27	0.012 kg
			C	Solder	**31-274.0252**		28	0.012 kg

Contacts: NC = Normally closed, NO = Normally open
Switching action: B = Momentary, C = Maintain
The component layouts you will find from page {$l=BR31_KAZE_Zeichnung}

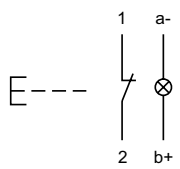

Wiring diagram 1

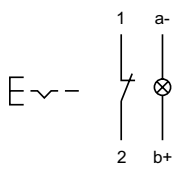

Wiring diagram 2

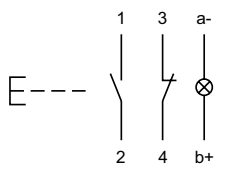

Wiring diagram 3

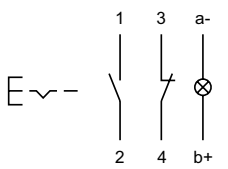

Wiring diagram 4

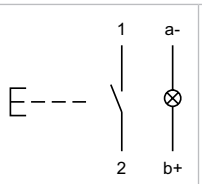

Wiring diagram 5

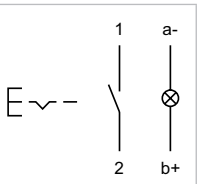

Wiring diagram 6

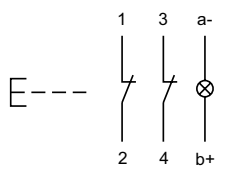

Wiring diagram 7

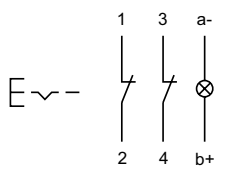

Wiring diagram 8

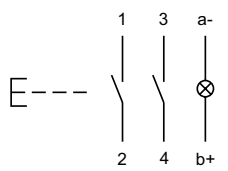

Wiring diagram 9

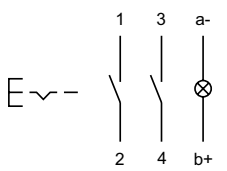

Wiring diagram 10

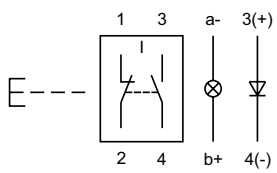

Wiring diagram 11

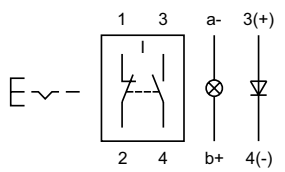

Wiring diagram 12

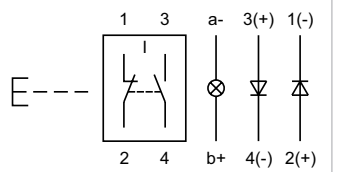

Wiring diagram 13

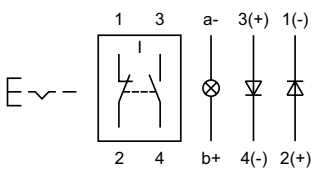

Wiring diagram 14

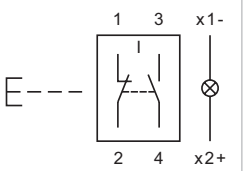

Wiring diagram 15

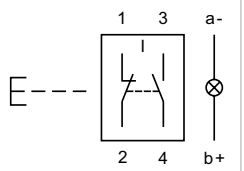

Wiring diagram 16

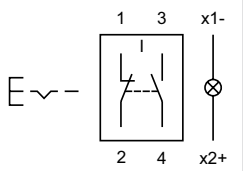

Wiring diagram 17

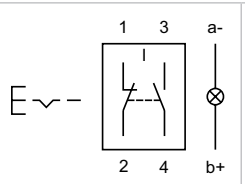

Wiring diagram 18

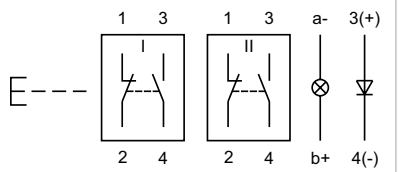

Wiring diagram 19

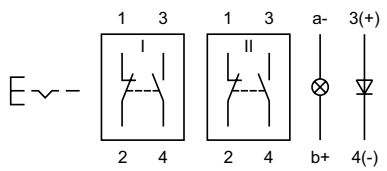

Wiring diagram 20

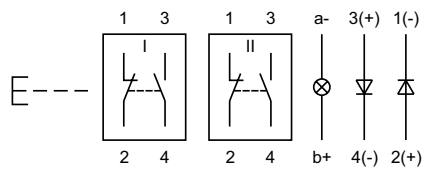

Wiring diagram 21

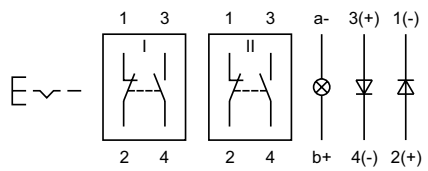

Wiring diagram 22

31 Raised design

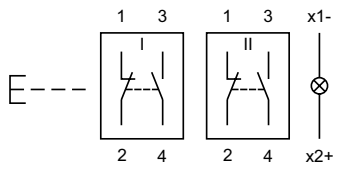

Wiring diagram 23

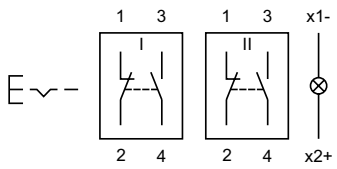

Wiring diagram 24

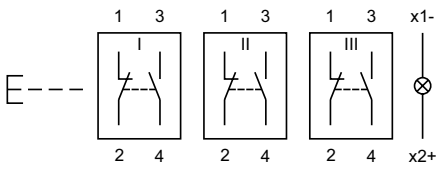

Wiring diagram 25

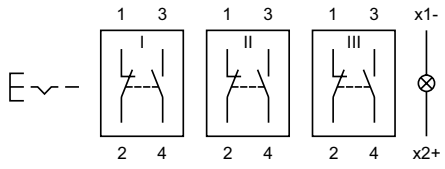

Wiring diagram 26

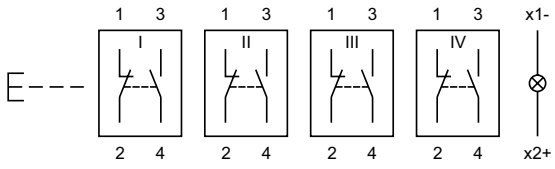

Wiring diagram 27

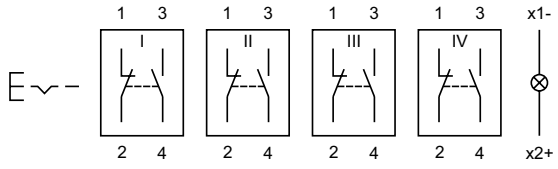

Wiring diagram 28

Front

Lens plastic

Product attribute	Dimension	Lens	Part No.	Weight
Lens plastic				
flat, illuminative	15.3 x 15.3 mm	smoked transparent	**31-953.1**	0.001 kg
		red transparent	**31-953.2**	0.001 kg
		orange transparent	**31-953.3**	0.001 kg
		yellow transparent	**31-953.4**	0.001 kg
		green transparent	**31-953.5**	0.001 kg
		blue transparent	**31-953.6**	0.001 kg
		colourless transparent	**31-953.7**	0.001 kg
flat, illuminative, not suitable for film insert	15.3 x 15.3 mm	red translucent	**31-951.2**	0.001 kg
		orange translucent	**31-951.3**	0.001 kg
		yellow translucent	**31-951.4**	0.001 kg
		green translucent	**31-951.5**	0.001 kg
		blue translucent	**31-951.6**	0.001 kg
		white translucent	**31-951.9**	0.001 kg
flat, illuminative, less suitable for film insert	15.3 x 15.3 mm	red transparent	**31-955.2**	0.001 kg
		yellow transparent	**31-955.4**	0.001 kg
		green transparent	**31-955.5**	0.001 kg
		colourless transparent	**31-955.7**	0.001 kg
flat, non-illuminative	15.3 x 15.3 mm	black opaque	**31-951.0**	0.001 kg
		grey opaque	**31-951.8**	0.001 kg
Lens plastic				
concave, illuminative	15.3 x 15.3 mm	red transparent	**31-954.2**	0.001 kg
		orange transparent	**31-954.3**	0.001 kg
		yellow transparent	**31-954.4**	0.001 kg
		green transparent	**31-954.5**	0.001 kg
		blue transparent	**31-954.6**	0.001 kg
		colourless transparent	**31-954.7**	0.001 kg
concave, non-illuminative	15.3 x 15.3 mm	black opaque	**31-952.0**	0.001 kg
Lens plastic				
flat, illuminative	15.3 x 21.5 mm	smoked transparent	**31-903.1**	0.001 kg
		red transparent	**31-903.2**	0.001 kg
		orange transparent	**31-903.3**	0.001 kg
		yellow transparent	**31-903.4**	0.001 kg
		green transparent	**31-903.5**	0.001 kg
		blue transparent	**31-903.6**	0.001 kg
		colourless transparent	**31-903.7**	0.001 kg
flat, illuminative, not suitable for film insert	15.3 x 21.5 mm	red translucent	**31-901.2**	0.001 kg
		orange translucent	**31-901.3**	0.001 kg

Product attribute	Dimension	Lens	Part No.	Weight
flat, illuminative, not suitable for film insert	15.3 x 21.5 mm	yellow translucent	**31-901.4**	0.001 kg
		green translucent	**31-901.5**	0.001 kg
		blue translucent	**31-901.6**	0.001 kg
		white translucent	**31-901.9**	0.001 kg
flat, illuminative, less suitable for film insert	15.3 x 21.5 mm	red transparent	**31-905.2**	0.001 kg
		yellow transparent	**31-905.4**	0.001 kg
		green transparent	**31-905.5**	0.001 kg
		colourless transparent	**31-905.7**	0.001 kg
flat, non-illuminative	15.3 x 21.5 mm	black opaque	**31-901.0**	0.001 kg
		grey opaque	**31-901.8**	0.001 kg
Lens plastic				
concave, illuminative	15.3 x 21.5 mm	red transparent	**31-904.2**	0.001 kg
		orange transparent	**31-904.3**	0.001 kg
		yellow transparent	**31-904.4**	0.001 kg
		green transparent	**31-904.5**	0.001 kg
		blue transparent	**31-904.6**	0.001 kg
		colourless transparent	**31-904.7**	0.001 kg
concave, illuminative, not suitable for film insert	15.3 x 21.5 mm	red translucent	**31-902.2**	0.001 kg
		orange translucent	**31-902.3**	0.001 kg
		yellow translucent	**31-902.4**	0.001 kg
		green translucent	**31-902.5**	0.001 kg
		blue translucent	**31-902.6**	0.001 kg
		white translucent	**31-902.9**	0.001 kg
concave, non-illuminative	15.3 x 21.5 mm	black opaque	**31-902.0**	0.001 kg
		grey opaque	**31-902.8**	0.001 kg
Lens plastic				
flat, illuminative	Ø 15.8 mm	smoked transparent	**31-933.1**	0.001 kg
		red transparent	**31-933.2**	0.001 kg
		orange transparent	**31-933.3**	0.001 kg
		yellow transparent	**31-933.4**	0.001 kg
		green transparent	**31-933.5**	0.001 kg
		blue transparent	**31-933.6**	0.001 kg
		colourless transparent	**31-933.7**	0.001 kg
flat, illuminative, not suitable for film insert	Ø 15.8 mm	red translucent	**31-931.2**	0.001 kg
		orange translucent	**31-931.3**	0.001 kg
		yellow translucent	**31-931.4**	0.001 kg
		green translucent	**31-931.5**	0.001 kg
		blue translucent	**31-931.6**	0.001 kg
		white translucent	**31-931.9**	0.001 kg
flat, illuminative, less suitable for film insert	Ø 15.8 mm	red transparent	**31-935.2**	0.001 kg
		green transparent	**31-935.5**	0.001 kg
		colourless transparent	**31-935.7**	0.001 kg
flat, non-illuminative	Ø 15.8 mm	black opaque	**31-931.0**	0.001 kg

Protective cover, IP 40

Zusätzliche Informationen

- Hinged, with means for sealing
- Front panel thickness reduces by 2 mm
- Please note that bigger minimum distances are necessary

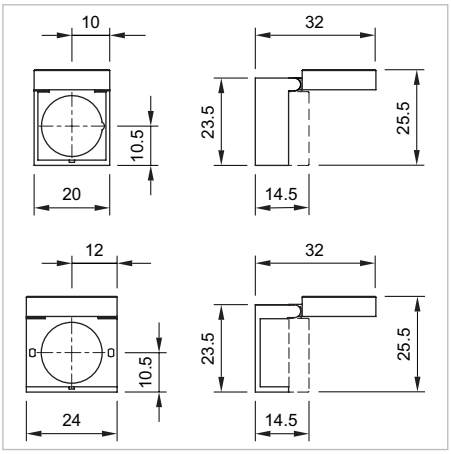

Dimensions [mm]

Mounting cut-out	Material	Optics	Dimension	Part No.	Weight
Protective cover					
Ø 16 mm	Plastic	transparent	20 x 23.5 mm	**31-920**	0.002 kg
Protective cover					
Ø 16 mm	Plastic	transparent	18 x 24 mm	**31-925**	0.002 kg

Front protective cap, IP 67

Additional Information

- Two-part
- Please note that bigger minimum distances are necessary

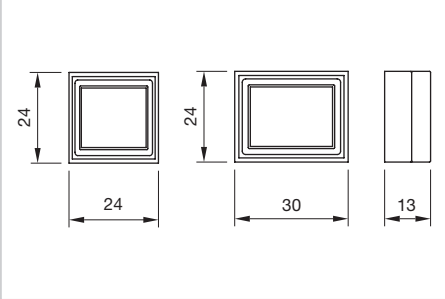

Dimensions [mm]

Product attribute	Dimension	Material	Colour	Optics	Part No.	Weight
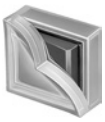 **Front protective cap**						
for button 18 x 18 mm with mounting cut-out Ø16 mm	24 x 24 mm	PVC/PE	colourless	transparent	**31-923**	0.003 kg
for button 18 x 24 mm with mounting cut-out Ø16 mm	24 x 30 mm	PE/Silicone	colourless	transparent	**31-924.2**	0.003 kg

Protective guard

Additional Information

- Please note that bigger minimum distances are necessary

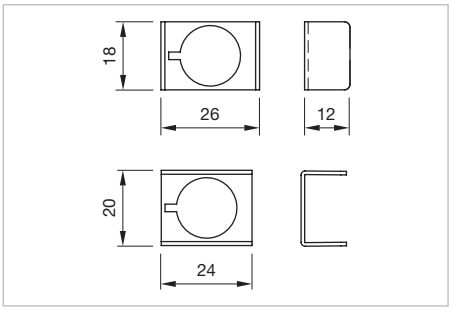

Dimensions [mm]

Product attribute	Dimension	Material	Colour	Part No.	Weight
Protective guard					
narrow ends bent upwards, for button 18 x 24 mm with mounting cut-out Ø16 mm	18 x 26 mm	Brass	matt chrome	**01-926**	0.011 kg
Protective guard					
broad sides bent upwards, for button 18 x 24 mm with mounting cut-out Ø16 mm	20 x 24 mm	Brass	matt chrome	**01-927**	0.011 kg

Blind plug

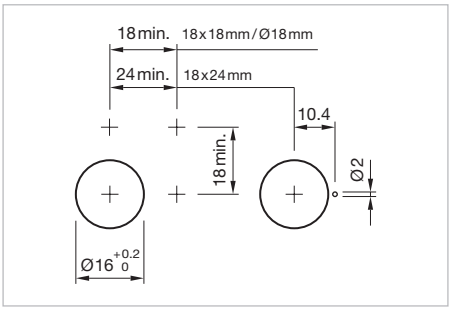

Mounting cut-outs [mm]

Dimension	Material	Colour	Part No.	Weight
Blind plug				
18 x 18 mm	Plastic	black	**01-948.0**	0.001 kg
Blind plug				
18 x 24 mm	Plastic	black	**01-947.0**	0.001 kg
Blind plug				
Ø 18 mm	Plastic	black	**01-949.0**	0.001 kg

Rear side

PCB plug-in base

Additional Information

- PCB plug-in base pins right-angle: With the extendable mounting the distance between plug-in base and PCB can be varied up to 3 mm

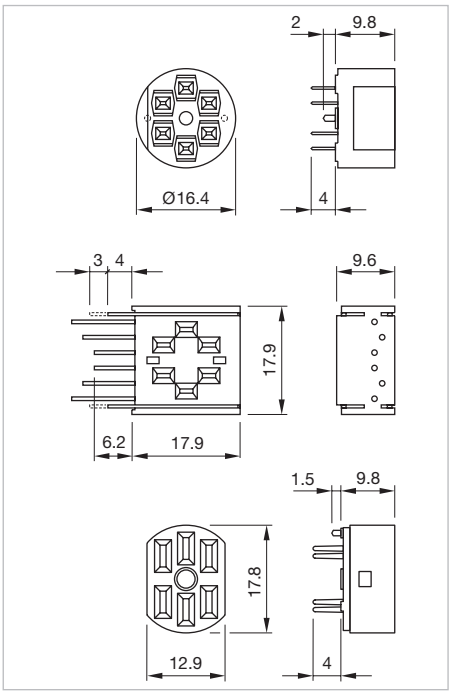

Dimensions [mm]

Product attribute	Pins	Terminal	Part No.	Component layout	Weight
PCB plug-in base					
for low level switching element	axial	PCB	**31-940**	3	0.002 kg
PCB plug-in base					
for low level switching element	right-angled	PCB	**31-941**	1	0.004 kg
PCB plug-in base					
for snap-action switching element 2.8 mm	axial	PCB	**31-942**	2	0.002 kg

The component layouts you will find from page {$l=BR31_KAZE_Zeichnung}

Flat receptacle

Product attribute	Part No.	Weight
Flat receptacle		
2.0 x 0.5 mm plug-in terminal	**31-945**	0.001 kg
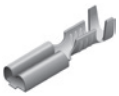 **Flat receptacle**		
2.8 x 0.5 mm plug-in terminal	**31-946**	0.001 kg

Insulation sleeve

Product attribute	Part No.	Weight
Insulation sleeve		
cover plug-in terminals for snap-action switching element 2.8 mm	**01-928**	0.001 kg
Insulation sleeve		
for flat receptacle 2.0 mm	**31-928**	0.001 kg
Insulation sleeve		
for flat receptacle 2.8 mm	**31-929**	0.001 kg

Terminal cover

Part No.	Weight
Terminal cover for snap-action switching element 16	
01-929_579	0.010 kg

Illumination

LED, T1 3/4 MG

Additional Information

- Due to high surface temperatures, the series resistor must not be soldered directly to the terminals of the equipment (use a terminal plate)
- When using AC/DC types with AC operation, slight flickering can occure
- Luminous intensity data of the LEDs on direct voltage
- Electrical and optical data are measured at 25 °C
- The specified versions are built with a protection diode (halve wave rectifier) in series and the LED
- Luminosity and wave length variations caused by LED manufacturing processes may cause slight differences regarding the illumination

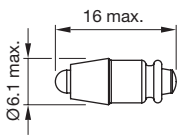

Dimensions [mm]

LED colour	Operating voltage	Operation current	Lumi. intensity	Dom. wavelength	Part No.	Weight
Single-LED						
Single-LED red	6 VDC +10 %	15 mA ±15 %	350 mcd	630 nm	**10-2J06.3142**	0.002 kg
	12 VAC/DC +10 %	7/14 mA ±15 %	330 mcd	630 nm	**10-2J09.1062**	0.002 kg
	24 VAC/DC +10 %	7/14 mA ±15 %	330 mcd	630 nm	**10-2J12.1062**	0.002 kg
	28 VAC/DC +10 %	7/14 mA ±15 %	330 mcd	630 nm	**10-2J13.1062**	0.002 kg
	48 VAC/DC +10 %	4/8 mA ±15 %	200 mcd	630 nm	**10-2J19.1042**	0.002 kg
Single-LED yellow	6 VDC +10 %	15 mA ±15 %	300 mcd	587 nm	**10-2J06.3144**	0.002 kg
	12 VAC/DC +10 %	7/14 mA ±15 %	280 mcd	587 nm	**10-2J09.1064**	0.002 kg
	24 VAC/DC +10 %	7/14 mA ±15 %	280 mcd	587 nm	**10-2J12.1064**	0.002 kg
	28 VAC/DC +10 %	7/14 mA ±15 %	280 mcd	587 nm	**10-2J13.1064**	0.002 kg
	48 VAC/DC +10 %	4/8 mA ±15 %	180 mcd	587 nm	**10-2J19.1044**	0.002 kg
Single-LED green	6 VDC +10 %	7 mA ±15 %	1050 mcd	525 nm	**10-2J06.3145**	0.002 kg
	12 VAC/DC +10 %	4/7 mA ±15 %	1050 mcd	525 nm	**10-2J09.1065**	0.002 kg
	24 VAC/DC +10 %	4/7 mA ±15 %	1050 mcd	525 nm	**10-2J12.1065**	0.002 kg
	28 VAC/DC +10 %	4/7 mA ±15 %	1050 mcd	525 nm	**10-2J13.1065**	0.002 kg
	48 VAC/DC +10 %	2/4 mA ±15 %	600 mcd	525 nm	**10-2J19.1045**	0.002 kg
Single-LED blue	6 VDC +10 %	15 mA ±15 %	680 mcd	470 nm	**10-2J06.3146**	0.002 kg
	12 VAC/DC +10 %	7/14 mA ±15 %	650 mcd	470 nm	**10-2J09.1066**	0.002 kg
	24 VAC/DC +10 %	7/14 mA ±15 %	650 mcd	470 nm	**10-2J12.1066**	0.002 kg
	28 VAC/DC +10 %	7/14 mA ±15 %	650 mcd	470 nm	**10-2J13.1066**	0.002 kg
	48 VAC/DC +10 %	4/8 mA ±15 %	400 mcd	470 nm	**10-2J19.1046**	0.002 kg
Single-LED white	6 VDC +10 %	15 mA ±15 %	750 mcd	x0.31/y0.32 nm	**10-2J06.3149**	0.002 kg
	12 VAC/DC +10 %	7/14 mA ±15 %	700 mcd	x0.31/y0.32 nm	**10-2J09.1069**	0.002 kg
	24 VAC/DC +10 %	7/14 mA ±15 %	700 mcd	x0.31/y0.32 nm	**10-2J12.1069**	0.002 kg
	28 VAC/DC +10 %	7/14 mA ±15 %	700 mcd	x0.31/y0.32 nm	**10-2J13.1069**	0.002 kg
	48 VAC/DC +10 %	4/8 mA ±15 %	400 mcd	x0.31/y0.32 nm	**10-2J19.1049**	0.002 kg

LED colour	Operating voltage	Operation current	Lumi. intensity	Dom. wavelength	Part No.	Weight
Bi-colour LED						
red/green	24 VDC +10 %	15/14 mA ±15 %	600/630 mcd	625/525 nm	**10-A312.314A**	0.002 kg

Filament lamp, T1 3/4 MG

Operating voltage	Operation current	Part No.	Weight
Filament lamp			
6 VAC/DC	120 mA ±10 %	**10-1306.1349**	0.001 kg
6.3 VAC/DC	200 mA ±10 %	**10-1307.1369**	0.001 kg
12 VAC/DC	75 mA ±10 %	**10-1309.1309**	0.001 kg
14 VAC/DC	80 mA ±10 %	**10-1310.1319**	0.001 kg
18 VAC/DC	40 mA ±10 %	**10-1311.1249**	0.001 kg
24 VAC/DC	35 mA ±10 %	**10-1312.1229**	0.001 kg
28 VAC/DC	30 mA ±10 %	**10-1313.1209**	0.001 kg
28 VAC/DC	40 mA ±10 %	**10-1313.1249**	0.001 kg
36 VAC/DC	20 mA ±10 %	**10-1316.1179**	0.001 kg
36 VAC/DC	30 mA ±10 %	**10-1316.1209**	0.001 kg
48 VAC/DC	20 mA ±10 %	**10-1319.1179**	0.001 kg
48 VAC/DC	25 mA ±10 %	**10-1319.1199**	0.001 kg

Series resistor

Additional Information

- Only for filament lamp 48 VAC, 25 mA
- For lamp voltage reduction
- Keep to the country specific safety instructions
- Due to high surface temperatures, the series resistor must not be soldered directly to the terminals of the equipment (use a terminal plate)

Operating voltage	Resistance	Part No.	Weight
Series resistor			
110 VAC	2.7 kOhm	**02-904.0**	0.003 kg
125 VAC	3.3 kOhm	**02-904.1**	0.003 kg
145 VAC	4.7 kOhm	**02-904.3**	0.003 kg
240 VAC	10 kOhm	**02-904.7**	0.003 kg

Terminal plate empty

Additional Information

- For fitting with series resistors

Product attribute	Dimension	Part No.	Weight
Terminal plate empty			
5 spaces	62.5 x 60 x 15 mm	**02-912.1**	0.025 kg
10 spaces	125 x 60 x 15 mm	**02-912.2**	0.045 kg
15 spaces	187.6 x 60 x 15 mm	**02-912.3**	0.090 kg
20 spaces	250 x 60 x 15 mm	**02-912.4**	0.095 kg

Mounting

Lens remover

Part No.	Weight
Lens remover	
02-905	0.011 kg

Lamp remover

Additional Information

▲ **Caution:** A switching process might be released when replacing the lamp

Part No.	Weight
Lamp remover	
61-9740.0	0.003 kg

Mounting tool

Additional Information

- for tightening or loosening of the fixing nut

Part No.	Weight
Mounting tool	
01-907	0.020 kg

Dressing tool

Additional Information

- For aligning buttons

Part No.	Weight
Dressing tool	
01-906	0.03 kg

Drawings

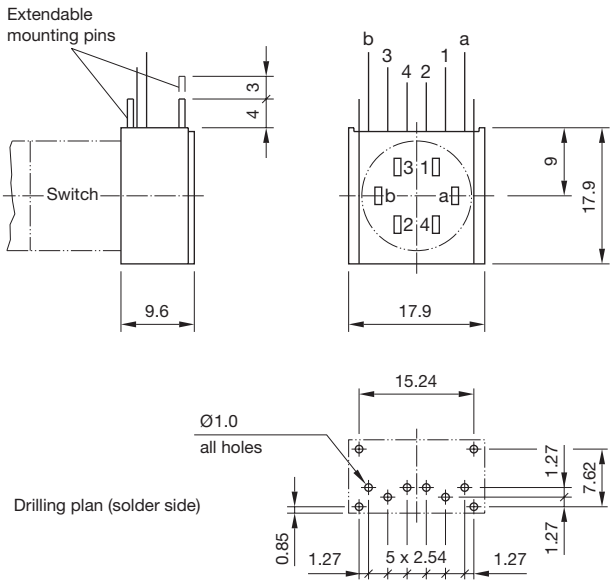

Component layout 1

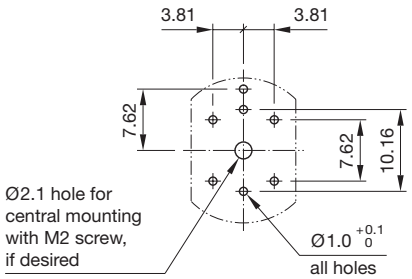

Component layout 2

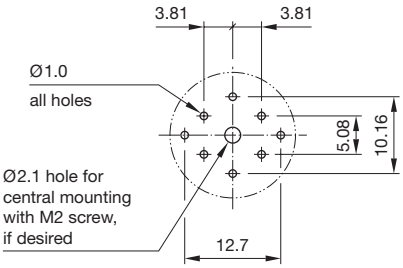

Component layout 3

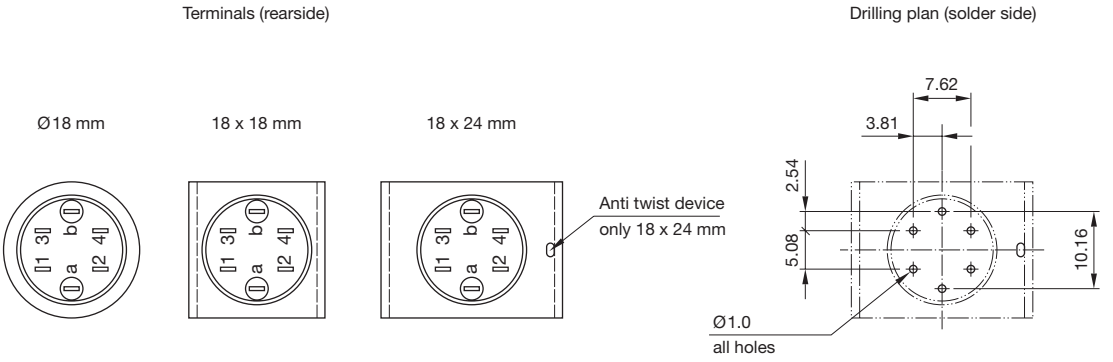

Component layout 4

Actuator with snap-action switching element

Switching system

Self-cleaning, double-break, snap action switching system (with contact gap 2 x 0.5 mm).
1 Normally closed or 1 Normally open contact per element.
Snap-action switching elements with soldering terminals at the sides: Up to 4 switching element can be on a pushbutton (max. 4 Normally closed and 4 Normally open contacts).
Snap-action switching element with axial plug-in terminals 2.8 mm stachable, only 1 switching element can be on a pushbutton.

Material

Material of contact
Gold plated silver

Switch housing
Axial plug-in-/soldering terminal 2.8 mm:
Diallylphthalate (DAP), Polyamide (PA66), Polysulfone, heatresistant and self-extinguishing
Soldering terminal: PA 6.6 Ultramide

Actuator housing
Polyetherimide, self-extinguishing

Mechanical characteristics

Terminals
Snap-action switching element with tinned soldering terminals at the sides:
Max. wire diameter 2 wires à 1.2 mm
Max. wire cross-section of stranded cable 1 x 1 mm²
Snap-action switching element with axial plug-in terminals, which can also be used as soldering terminals: Plug-in terminal 2.8 x 0.5 mm

Soldering terminal:
Max. wire diameter 1 wire of 1.5 mm²
Max. wire cross-section of stranded cable 2 x 0.75 mm² or 1 x 1.0 mm²

Tightening torque
for fixing nut max. 50 Ncm

Actuating force
2 N … 5.5 N, depending on the number of switching elements

Actuating travel
3 mm

Rebound time
≤ 5 ms

Mechanical lifetime
Momentary action 2 million cycles of operation
Maintained action 1 million cycles of operation

Electrical characteristics

Standards
IEC 61058, EN 61058

Rated voltage
250 VAC/VDC

Rated current
5 A

Contact resistance
Starting value (initial) ≤ 50 mΩ

Conventional free air thermal current
5 A
The maximum current in continuous operation and at ambient temperature not exceeding the quoted maximum values.

Switch rating
250 VAC, 5 A (cosφ 1)
250 VAC, 3 A (cosφ 0.3)

Switch rating AC (cosφ 0.7)

Voltage	125 VAC	250 VAC
Current	3 A	2 A

Switch rating DC (inductive) L: R = 30 ms

Voltage	24 VDC	60 VDC	110 VDC	220 VDC
Current	2 A	0.7 A	0.2 A	0.1 A

Electric strength
2500 VAC, 50 Hz, 1 min. between all terminals and earth, as per IEC 60512-2-11

Protection class
II

Environmental conditions

Storage temperature
-40 °C … +85 °C

Service temperature
-25 °C … +55 °C
For indicators and illuminated pushbuttons mounted as a block, make sure the heat can escape freely.

Protection degree
Front as per:
IP 40
IP 67 with spray cover

Shock resistance
(Single impacts, semi-sinusoidal)
15 g for 11 ms, as per IEC 60512-4-3, IEC 60068-2-27

Vibration resistance
(sinusoidal)
10 g at 0 – 2000 Hz, amplitude 1.5 mm, as per IEC 60512-4-4, IEC 60068-2-6

Climate resistance
Standard condition, as per IEC 60068-2-3 and 2-30
Changing condition, as per IEC 60068-2-14 and 2-33

Approvals

Approbations
CB (IEC 61058)
CSA
ENEC (EN 61058)
Germanischer Lloyd
UL

Declaration of conformity
CE

Actuator with low level switching element

Switching system

This low level switching element was designed for switching low powers in electronic circuits. The mechanism assures reliable switching of loads ranging from a few µA/µV up to 100 mA/ 42 VAC/DC.
Single-break momentary contact, as normally open or normally closed with 4 independent points of contact. 2 momentary contacts per switching element; combination of normally open and normally closed is possible.
Special features are the long life, extremely short rebound time and stable contact resistance.

Material

Material of contact
Gold plated

Switch housing
Polysulfone, heat-resistant and self-extinguishing

Actuator housing
Polyetherimide, self-extinguishing

Mechanical characteristics

Terminals
The universal terminals permit these units to be mounted on printed circuit boards (PCB). These terminals can also be used as soldering or plug-in terminals.
For these terminals we can also supply a plug-in base which, when soldered on to the board, enables the switch to be plugged in.

Soldering terminal:
Max. wire diameter 2 wires à 0.8 mm
Max. wire cross-section of stranded cable 1x 0.75 mm²

Plug-in terminal: 2.0 x 0.5 mm

Tightening torque
for fixing nut max. 50 Ncm

Actuating force
3 N … 3.5 N

Actuating travel
3 mm

Rebound time
Typ. < 100 µs

Mechanical lifetime
Momentary action 5 million cycles of operation
Maintained action 1 million cycles of operation

Electrical characteristics

Standards
EN 61058

Contact resistance
Starting value (initial) ≤ 50 mΩ

Switch rating
10 µA, 100 µV to 100 mA at 42 VAC/VDC

Electric strength
2500 VAC, 50 Hz, 1 min. between all terminals and earth, as per IEC 60512-2-11

Protection class
II

Environmental conditions

Storage temperature
-40 °C … +85 °C

Service temperature
-25 °C … +55 °C
For indicators and illuminated pushbuttons mounted as a block, make sure the heat can escape freely.

Protection degree
Front as per:
IP 40
IP 67 with spray cover

Shock resistance
(Single impacts, semi-sinusoidal)
15 g for 11 ms, as per IEC 60512-4-3, IEC 60068-2-27

Vibration resistance
(sinusoidal)
10 g at 0 – 2000 Hz, amplitude 1.5 mm, as per IEC 60512-4-4, IEC 60068-2-6

Climate resistance
Standard condition, as per IEC 60068-2-3 and 2-30
Changing condition, as per IEC 60068-2-14 and 2-33

Buzzer 31-810.005

Buzzer system

Electronic non-contacting buzzer
with IC oscillator

Material

Alarm buzzer case
Polyetherimide

Front bezel
Polyamide

Mechanical characteristics

Terminals
Soldering terminal

Tightening torque
for fixing nut max. 50 Ncm

Electrical characteristics

Frequency (tone)
Approx. 2.8 kHz

Interval frequency
approx. 3 Hz

Sound pressure
88 dB (A) ±8 dB at a distance of 0.1 m
Volume variable with a 1 MΩ potentiometer or corresponding fixed resistor

Operation Voltage/Current
Typ. 10 VAC … 55 VAC, 25 mA
Typ. 10 VDC … 75 VDC, 15 mA

Environmental conditions

Storage temperature
-40 °C … +85 °C

Service temperature
-25 °C … +55 °C

Protection degree
IP 40

Approvals

Approbations
Germanischer Lloyd

Declaration of conformity
CE

Buzzer 31-801.002

Buzzer system

Electronic non-contacting buzzer
with IC oscillator

Material

Alarm buzzer case
Polyetherimide

Front bezel
Polyamide

Mechanical characteristics

Terminals
Plug-in terminal 2.8 x 0.5 mm

Tightening torque
for fixing nut max. 50 Ncm

Electrical characteristics

Frequency (tone)
ca. 2.0 kHz

Interval frequency
2 Hz

Sound pressure
88 db (A) ±8 dB at a distance of 0.1 m

Operation Voltage/Current
10 VDC … 26 VDC, ≤ 20 mA

Environmental conditions

Storage temperature
-40 °C … +85 °C

Service temperature
-25 °C … +55 °C

Protection degree
IP 40

Approvals

Approbations
Germanischer Lloyd

Declaration of conformity
CE

General notes

1. Engraving

In addition to the most commonly used world languages, in DIN1451-3 close spacing, other typefaces are available as Scandinavian, Slavic, Greek, Russian and Polish. Red, blue and black lenses are filled with white colour. Other colour lenses arefilled in black. Standard height of letters is 2 mm. If the height is not specified, we will supply 2 mm engraved letters.

2. Hot stamping

For larger series it is worth considering markings by means of hot stamping We will pleased to advise you. For letters and figures, typefaces with 2.5 mm, 3 mm and 4 mm are available.

3. Film inserts

Instead of using engraving the lenses can be fitted with transparent film inserts, as an alternative. For this purpose, though, it is advisible to use transparent lenses. In the case of use of a smoke-black lens the fitted film becomes readable only if the lamp is on. To insert the film, the feet of the lens holder have to be pushed together far enough to enable the lens to be lift off easily. The film thickness is 0.2 mm. Important : Consider pushbutton mounting orientation befor specifying engraving characters !

Alle Dimensionen in mm

Front size (Lens)	Film insert max. size	Height of letters h	Number of lines	Number of capital letters per line (target value)	Number of small letters per line (target value)	Image
18 x 18 (15.2 x 15.2)	12.7 x 12.7	2.5	4	7–8	8	B3
		3.0	3	6–7	7	B3
		4.0	2	4–5	5	B3
		5.0	2	3–4	4	B3
		6.0	1	3	3–4	B3
		8.0	1	2–3	2–3	B3
18 x 24 (15.2 x 21.2)	12.7 x 18.7	2.5	4	11	12	B1
			5	7–8	8	B2
		3.0	3	9–10	10–11	B1
			4	6–7	7	B2
		4.0	2	7	7–8	B1
			3	4–5	5	B2
		5.0	2	5–6	6	B1
				3–4	4	B2
		6.0	1	4–5	5	B1
			2	3	3–4	B2
		8.0	1	3–4	3–4	B1
				2–3	2–3	B2
Ø 18 (Ø 15.8)	Ø 12.8	2.5	3	6	6	B4
		3.0	2	5	6	B4
		4.0	2	3	4	B4
		5.0	1	2	3	B4
		6.0	1	2	2	B4
		8.0	1	2	2	B4

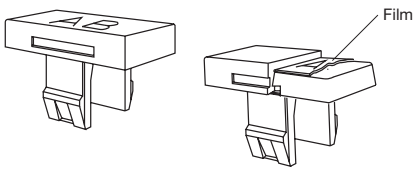

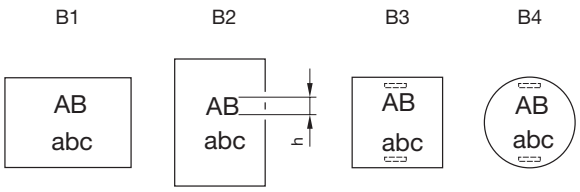

Suppressor circuits

When switching inductive loads such as relays, DC motors, and DC solenoids, it is always important to absorb surges (e. g. with a diode) to protect the contacts. When these inductive loads are switched off, a counter emf can severely damage switch contacts and greatly shorten lifetime.

Fig. 1 shows an inductive load with a free-wheeling diode connected in parallel. This free-wheeling diode provides a path for the inductor current to flow when the current is interrupted by the switch. Without this free-wheeling diode, the voltage across the coil will be limited only by dielectric breakdown voltages of the circuit or parasitic elements of the coil. This voltage can be kilovolts in amplitude even when nominal circuit voltages are low (e. g. 12 VDC) see Fig. 2.

The free-wheeling diode should be chosen so that the reverse breakdown voltage is greater than the voltage driving the inductive load. The DC blocking voltage (VR) of the free-wheeling diode can be found in the datasheet of a diode. The forward current should be equal or greater than the maximum current flowing through the load.

To get an efficient protection, the free-wheeling diode must be connected as close as possible to the inductive load!

Switching with inductive load
Fig. 1

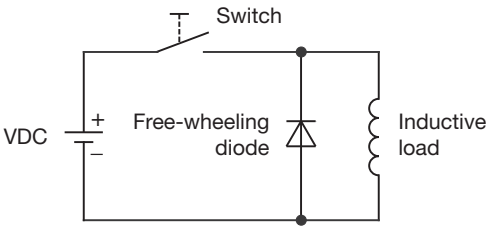

Counter EMF
over load without free-wheeling diode
Fig. 2

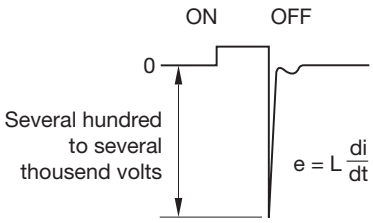

Index from Part No.

Part No.	Page
01-906	22
01-907	21
01-925	13
01-926	14
01-927	14
01-928	17
01-929	17
01-947.0	15
01-948.0	15
01-949.0	15
02-904.0	19
02-904.1	19
02-904.3	19
02-904.7	19
02-905	21
02-912.1	20
02-912.2	20
02-912.3	20
02-912.4	20
10-1306.1349	19
10-1307.1369	19
10-1309.1309	19
10-1310.1319	19
10-1311.1249	19
10-1312.1229	19
10-1313.1209	19
10-1313.1249	19
10-1316.1179	19
10-1316.1209	19
10-1319.1179	19
10-1319.1199	19
10-2J06.3142	18
10-2J06.3144	18
10-2J06.3145	18
10-2J06.3146	18
10-2J06.3149	18
10-2J09.1062	18
10-2J09.1064	18
10-2J09.1065	18
10-2J09.1066	18
10-2J09.1069	18
10-2J12.1062	18
10-2J12.1064	18
10-2J12.1065	18
10-2J12.1066	18
10-2J12.1069	18
10-2J13.1062	18
10-2J13.1064	18
10-2J13.1065	18
10-2J13.1066	18
10-2J13.1069	18
10-2J19.1042	18
10-2J19.1044	18
10-2J19.1045	18
10-2J19.1046	18
10-2J19.1049	18
10-A312.314A	19
31-030.002	5
31-030.005	5
31-031.006	5
31-040.002	4
31-040.005	4
31-041.006	4
31-050.002	4
31-050.005	4
31-051.006	4
31-121.022	8
31-121.0252	8
31-122.0252	8
31-123.0252	8
31-124.0252	8
31-131.022	8
31-131.0252	8
31-132.0252	9
31-133.0252	9
31-134.0252	9
31-151.022	7
31-151.0252	7
31-152.0252	7
31-153.0252	7
31-154.0252	8
31-261.022	8
31-261.0252	8
31-262.0252	8
31-263.0252	8
31-264.0252	8
31-271.022	8
31-271.0252	8
31-272.0252	9
31-273.0252	9
31-274.0252	9
31-281.022	7
31-281.0252	7
31-282.0252	7
31-283.0252	7
31-284.0252	8
31-421.036	8
31-422.036	8
31-423.036	8
31-425.036	8
31-426.036	8
31-431.036	8
31-432.036	8
31-433.036	8
31-435.036	8
31-436.036	8
31-451.036	7
31-452.036	7
31-453.036	7
31-455.036	7
31-456.036	7
31-461.036	8
31-463.036	8
31-465.036	8
31-466.036	8
31-471.036	8
31-473.036	8
31-475.036	8
31-481.036	7
31-483.036	7
31-485.036	7
31-701.006	4
31-702.006	4
31-703.006	4
31-704.006	4
31-705.0292	8
31-706.0292	8
31-707.0292	8
31-708.0292	8
31-709.0292	7
31-710.0292	7
31-713.0292	8
31-714.0292	8
31-715.0292	8
31-716.0292	8
31-718.0292	7
31-744.0292	8
31-748.0292	8
31-801.002	6
31-810.005	6
31-901.0	12
31-901.2	11
31-901.3	11
31-901.4	12
31-901.5	12
31-901.6	12
31-901.8	12
31-901.9	12
31-902.0	12
31-902.2	12
31-902.3	12
31-902.4	12
31-902.5	12
31-902.6	12
31-902.8	12
31-902.9	12
31-903.1	11
31-903.2	11
31-903.3	11
31-903.4	11
31-903.5	11
31-903.6	11
31-903.7	11
31-904.2	12
31-904.3	12
31-904.4	12
31-904.5	12
31-904.6	12
31-904.7	12
31-905.2	12
31-905.4	12
31-905.5	12
31-905.7	12
31-920	13
31-923	13
31-924.2	13
31-928	17
31-929	17
31-931.0	12
31-931.2	12
31-931.3	12
31-931.4	12
31-931.5	12
31-931.6	12
31-931.9	12
31-933.1	12
31-933.2	12
31-933.3	12
31-933.4	12
31-933.5	12
31-933.6	12
31-933.7	12
31-935.2	12
31-935.5	12
31-935.7	12
31-940	16
31-941	16
31-942	16
31-945	17
31-946	17
31-951.0	11
31-951.2	11
31-951.3	11
31-951.4	11
31-951.5	11
31-951.6	11
31-951.8	11
31-951.9	11
31-952.0	11
31-953.1	11
31-953.2	11
31-953.3	11
31-953.4	11
31-953.5	11
31-953.6	11
31-953.7	11
31-954.2	11
31-954.3	11
31-954.4	11
31-954.5	11
31-954.6	11
31-954.7	11
31-955.2	11
31-955.4	11
31-955.5	11
31-955.7	11
61-9740.0	21