IEC Appliance Inlet C14 or C18 with Circuit Breaker TA35 2-pole with thermal or thermal-magnetic release

new

Screw-on with IP67 with thermal circuit breaker TA35 and magnetic release

Screw-on with IP67 and IP54 cord connection

Snap-in IP40 with TA35 red illuminated and embossed symbols

C14 70° C

C18 70° C

See below:
Approvals and Compliances

Description

- Panel mount :
  Screw-on version from front or rear side, snap-in version front side Appliance Inlet , protection class I or II , Circuit breaker type TA35 , 2-pole , with thermal or thermal-magnetic release
- Pre-wired coupling
- V-Lock notch standard
- Quick connect terminal 6.3 x 0.8 mm

Unique Selling Proposition

- With sealing: IP54 under load, IP67 towards housing
- Thermal or thermal-magnetic circuit breaker; thermal-magnetic release fast acting or with time lag
- Recessed rocker prevents accidental manipulation
- Various mounting options

Characteristics

- Connector and circuit breaker are prewired
- Circuit Breaker thermal or thermal-magnetic, non-illuminated or illuminated
- Suitable for use in equipment according to IEC/UL 62368-1

Other versions on request

- Version without pre-wiring from inlet to circuit breaker

References

Substitute for type 6135
Component: circuit breakers TA36 Rocker; TA35 Rocker 2Pole
Alternative: version with line filter DG12

Weblinks

pdf data sheet, html datasheet, General Product Information, Approvals, Distributor-Stock-Check, Accessories, Detailed request for product

Inlet Connector C14 / C18 also available without seal. The V-Lock cord latching system prevents against accidental removal of the power supply.

Technical Data

Ratings IEC	10 A / 250 VAC; 50 Hz
Ratings UL/CSA	15 A / 250 VAC; 60 Hz
Dielectric Strength	> 2.5 kVAC between L-N > 3 kVAC between L/N-PE (1 min/50 Hz)
Allowable Operation Temperature	-25 °C to 60 °C
IP-Protection	Front Side IP40 / IP67 acc. to IEC 60529
Protection against electric shock	Suitable for appliances with protection class I or II acc. to IEC 61140
Terminal	Quick connect terminals 6.3 x 0.8 mm
Panel Thickness S	Screw: max 8 mm Recommended torque min 0.25 Nm Snap-in : S =1/1.2/1.5/2/2.5/3 mm
Material: Housing	Thermoplastic, black, UL 94V-0

Appliance inlet/-outlet	C14 / C18 acc. to IEC 60320-1 UL 60320-1, CSA C22.2 no. 60320-1 (for cold conditions) pin-temperature 70 °C, 10 A, Protection Class I or II
Circuit Breakers	Acc. IEC/EN 60934, UL 1077, CSA 22.2 no. 235 2-pole rocker switch, illuminated or non-illuminated.

Approvals and Compliances

Detailed information on product approvals, code requirements, usage instructions and detailed test conditions can be looked up in Details about Approvals

SCHURTER products are designed for use in industrial environments. They have approvals from independent testing bodies according to national and international standards. Products with specific characteristics and requirements such as required in the automotive sector according to IATF 16949, medical technology according to ISO 13485 or in the aerospace industry can be offered exclusively with customer-specific, individual agreements by SCHURTER.

Approvals

The approval mark is used by the testing authorities to certify compliance with the safety requirements placed on electronic products.

Approval Reference Type: DG11

Approval Logo	Certificates	Certification Body	Description
10	VDE Approvals	VDE	Certificate Number: 40048151
c US	UL Approvals	UL	UR File Number: E96454
	CCC Approvals	CCC	CCC Certificate Number: 2019180204007932, 2019180204007907
	KTL Approvals	KTL	Korea Testing Laboratory

Product standards

Product standards that are referenced

Organization	Design	Standard	Description
IEC	Designed according to	IEC 60320-1	Appliance couplers for household and similar general purposes
UL	Designed according to	UL 60320-1	Standard for Attachment Plugs and Receptacles
CSA Group	Designed according to	CSA C22.2 no. 60320-1	General Use Receptacles, Attachment Plugs, and Similar Wiring Devices

Application standards

Application standards where the product can be used

Organization	Design	Standard	Description
IEC	Suitable for applications acc.	IEC/UL 62368-1	Audio/video, information and communication technology equipment - Part 1: Safety requirements

Compliances

The product complies with following Guide Lines

Identification	Details	Initiator	Description
CE	CE declaration of conformity	SCHURTER AG	The CE marking declares that the product complies with the applicable requirements laid down in the harmonisation of Community legislation on its affixing in accordance with EU Regulation 765/2008.
UK CA	UKCA declaration of conformity	SCHURTER AG	The UKCA marking declares that the product complies with the applicable requirements laid down in the British Amendment of Regulation (EC) 765/2008.
RoHS COMPLIANT	RoHS	SCHURTER AG	Directive RoHS 2011/65/EU, Amendment (EU) 2015/863
50	China RoHS	SCHURTER AG	The law SJ / T 11363-2006 (China RoHS) has been in force since 1 March 2007. It is similar to the EU directive RoHS.
REACH	REACH	SCHURTER AG	On 1 June 2007, Regulation (EC) No 1907/2006 on the Registration, Evaluation, Authorization and Restriction of Chemicals 1 (abbreviated as "REACH") entered into force.
V-Lock		SCHURTER AG	V-Lock system are based on a matching plug-dose combination. The connector is equipped with a notch intended for use with the latching cordset. The cord latching system prevents against accidental removal of the cordset.

Dimensions [mm]
Snap-in mounting for front mount IP40

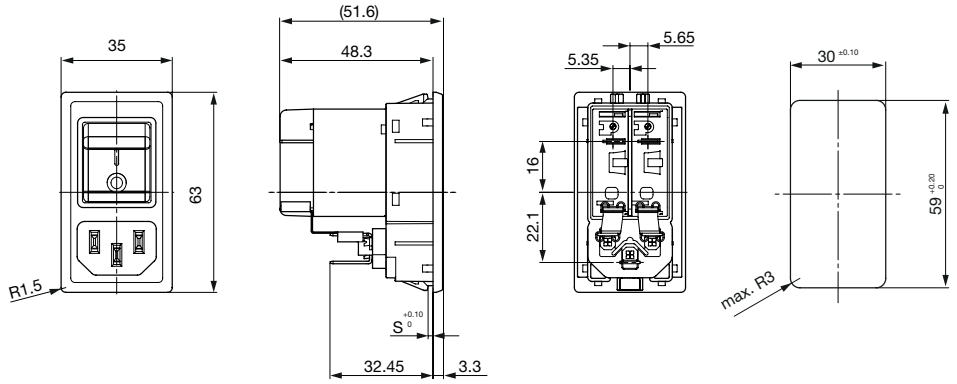

S = Panel thickness

Screw-on mounting version A for front mount IP40

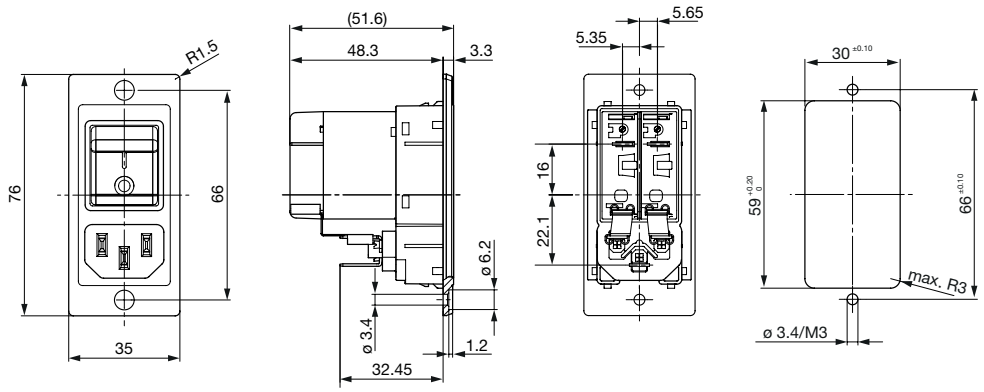

Screw-on mounting Version A for rear mount IP40

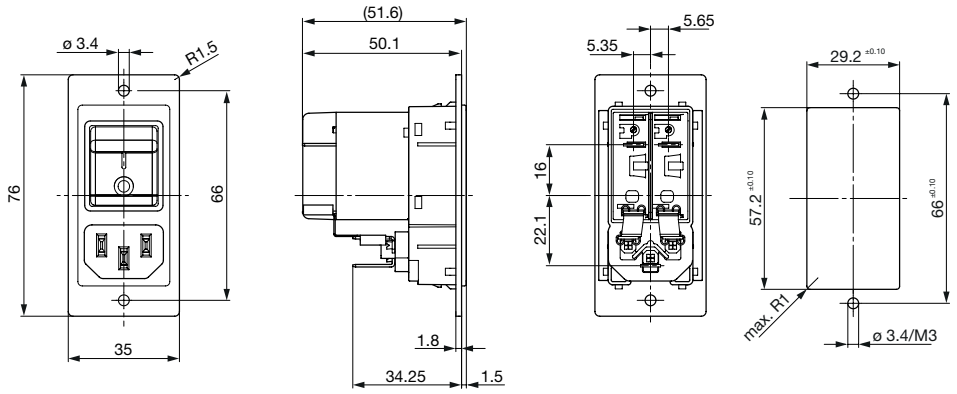

Screw-on mounting Version B for front mount IP40

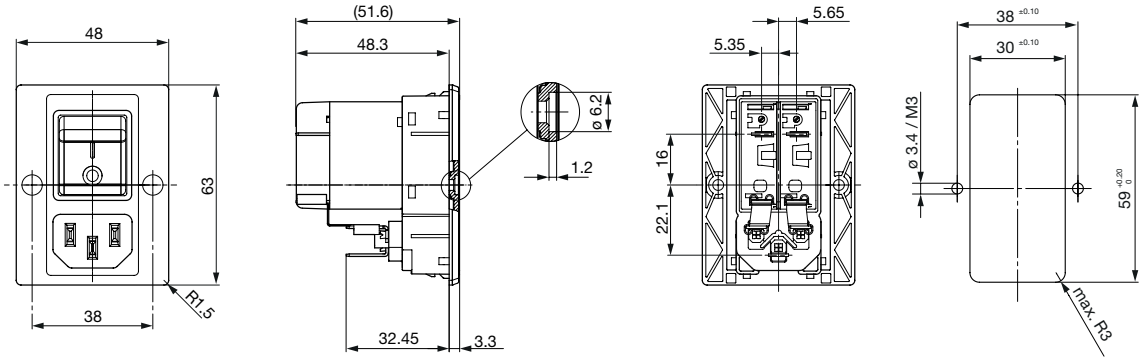

Screw-on mounting version B for rear mount IP40

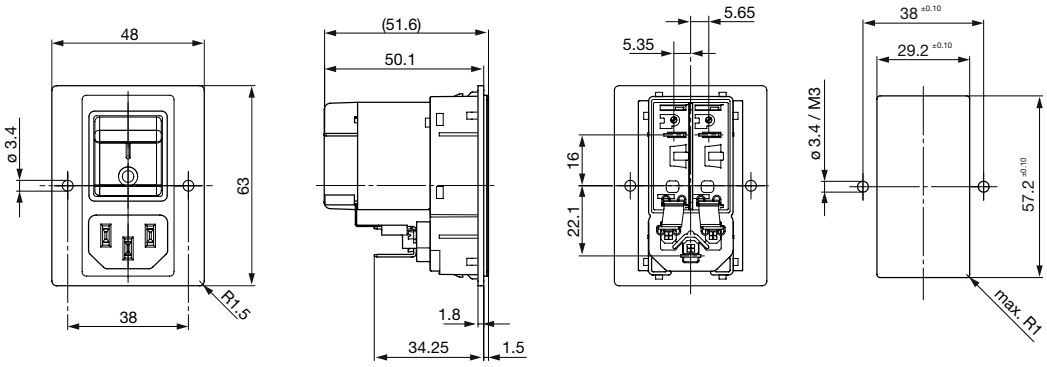

Screw-on mounting for front mount IP67

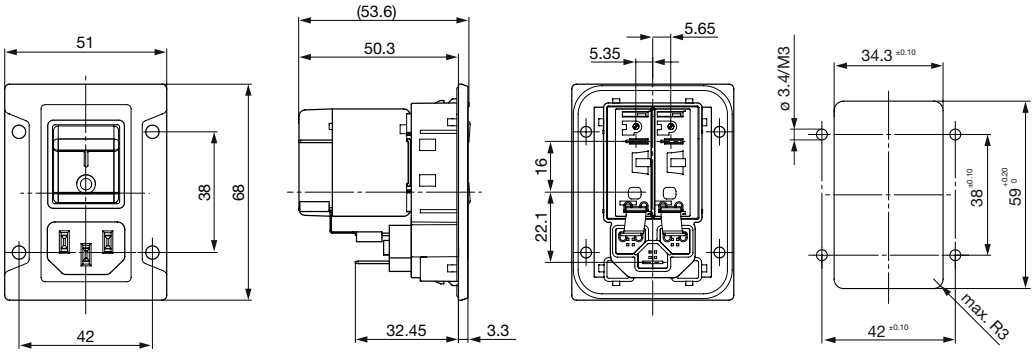

Screw-on mounting Version A for front mount IP40 with magnetic release

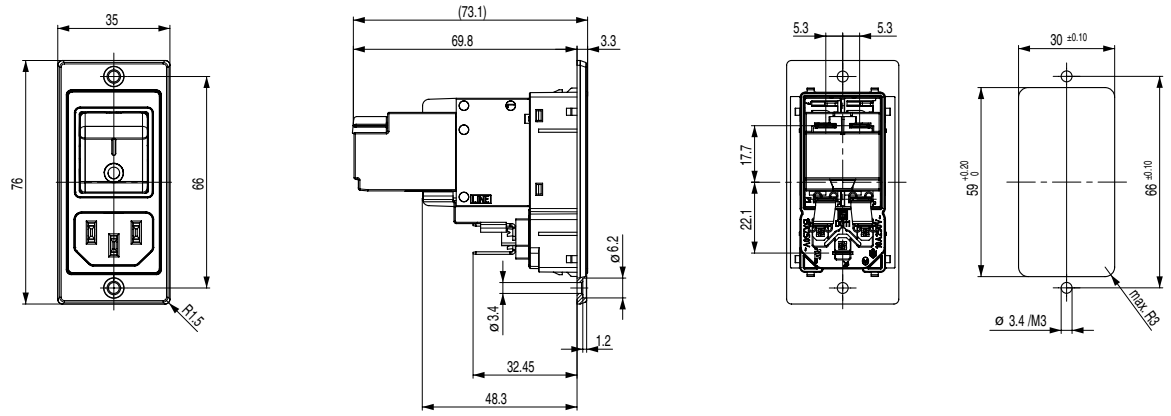

Screw-on mounting Version B for front mount IP40 with magnetic release

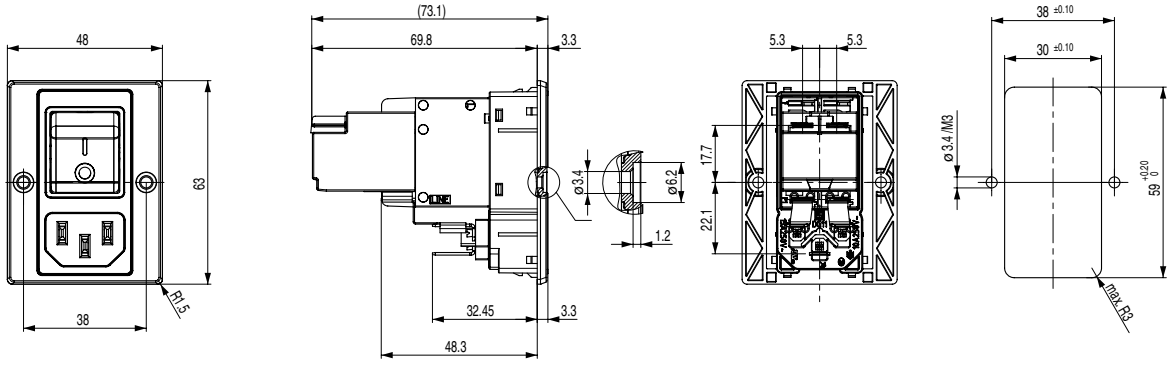

Screw-on mounting for front mount IP67 with magnetic release

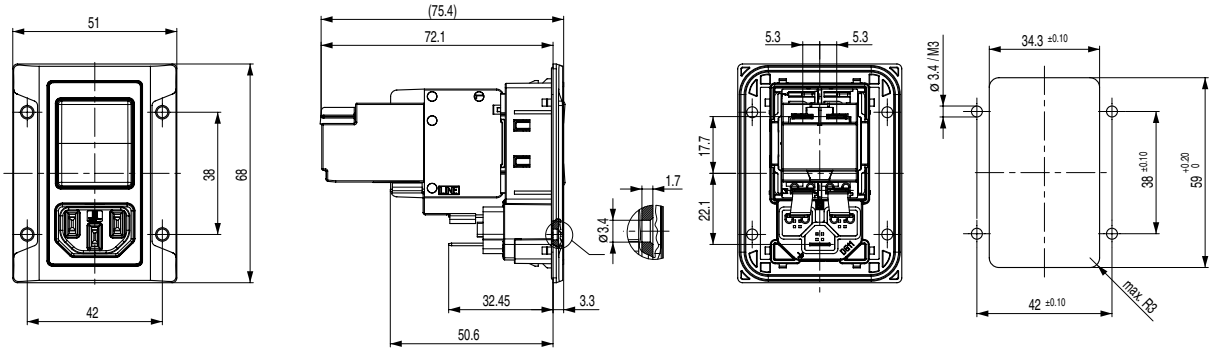

Diagrams

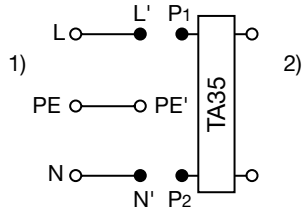

1) Line
2) Load

Effect of ambient temperature

The units are calibrated for an ambient temperature of +23°C. To determine the rated current for a lower or higher ambient temperature, use a correction factor (typical value) from the table below:

Ambient Temperature [°C]	Correction factor
-30	0.76
-20	0.81
0	0.90
+23	1.00
+40	1.03
+50	1.04
+60	1.06

Example: Rated current = 5 A, Environmental temperature = 50 °C --> Correction factor = 1.04, Resulting current = 5.2 A --> Round to next higher rated current: 6 A

Time-Current-Curves

Tripping Characteristics thermal I_n < 3 A

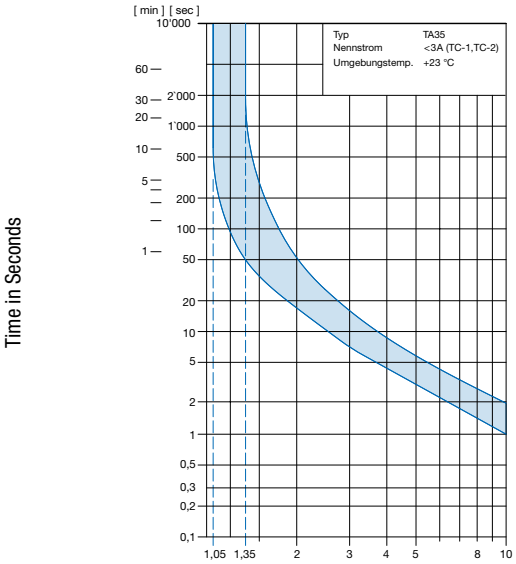

Ambient temperature +23°

Tripping Characteristics thermal In ≥ 3 ... ≤ 20 A

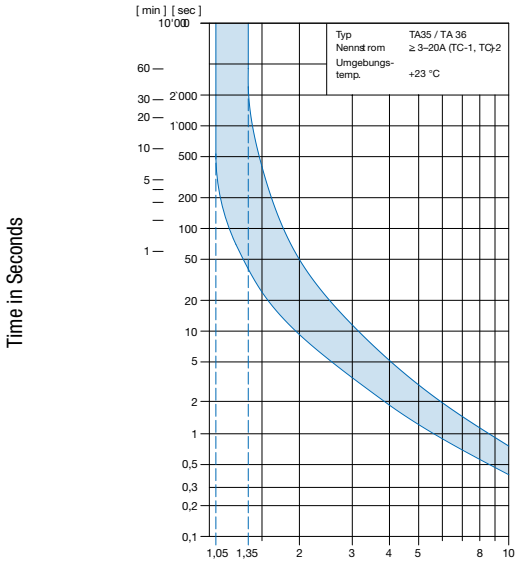

Ambient temperature +23°

Tripping Characteristics thermal magnetic fast acting

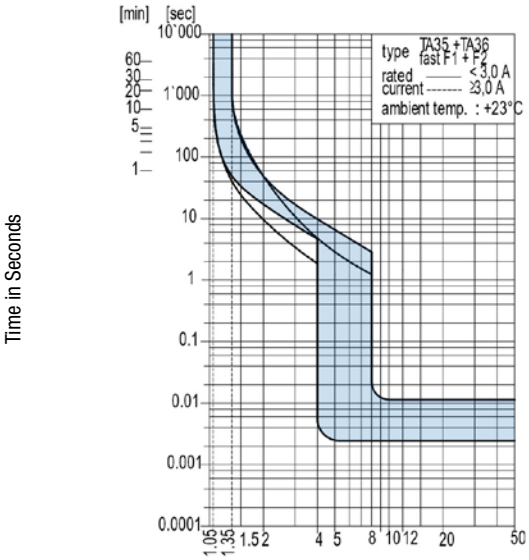

Ambient temperature +23°

Tripping Characteristics thermal magnetic time lag

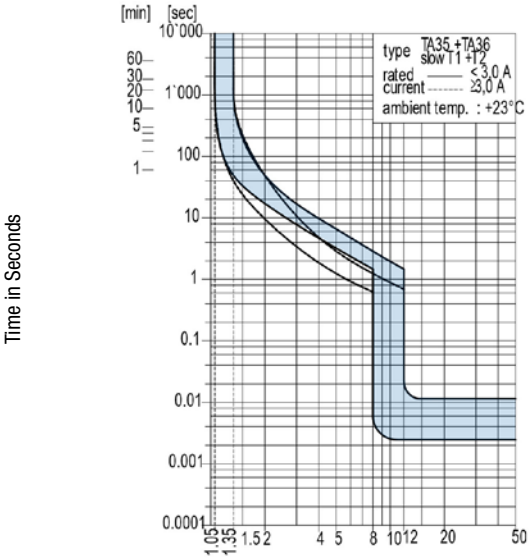

Ambient temperature +23°

Order number key

Configuration Code

Typ	Configuration Code (Example) TA35		
DG11	C B D W F 1 2 0 C 0 (see table 1)	-000-C6135-	XXX-XXX-00

Color
- 0 Black
- 1 White

Panel Mounting 1)
- 00 Screw version A front mounting
- 01 Screw version B front mounting
- 02 Screw version A rear mounting
- 03 Screw version B rear mounting
- 10 Snap-in 1.0 mm
- 12 Snap-in 1.2 mm
- 15 Snap-in 1.5 mm
- 20 Snap-in 2.0 mm
- 25 Snap-in 2.5 mm
- 30 Snap-in 3.0 mm
- 88 Screw version front mounting (sealed towards housing, IP67)

Terminal PE
- 0 Without (PCII)
- 1 QC 6.3x0.8 mm

Terminal N
- 1 QC 6.3x0.8 mm (unwired)
- 3 Connection to TA35 (wired)

Terminal L
- 1 QC 6.3x0.8 mm (unwired)
- 3 Connection to TA35 (wired)

1)

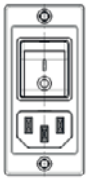

Screw version A

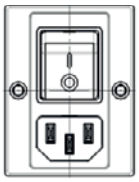

Screw version B

ORDER CODE

Table 1 Selection for type TA35

Order example

Number of switched poles		2-pole	
Number of protected poles		1	2
		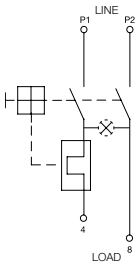	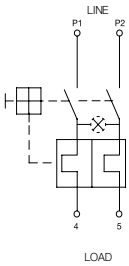
Switch	without illumination	**CBT**	**CBD**
Switch	illuminated 240 V	**C12**	**C32**
	illuminated 120 V	**C14**	**C34**

Other versions on request

CBD	W	F	120	C0

Colours

	Switch front	Rocker non-illuminated	Rocker illuminated
W	black	white	–
B	black	black	–
3	black	–	red transparent
4	black	–	green transparent
6	black	–	orange transparent

Other colours on request

Rocker legend

	Surface	Illustration		Colour of print
F	embossed	–	o	
H	printed	ON	OFF	white
K	printed	ON	OFF	black
L	printed	–	o	white
M	printed	–	o	black

Other legends on request

Rated current I_n (A)

I_n	Code	I_n	Code
1,0	**J10**	8,0	**080**
2,0	**J20**	10,0	**100**
4,0	**040**	12,0	**120***
5,0	**050**	15,0	**150***
6,0	**060**		

Other rated currents on request

*) UL / CSA only

Position of the rocker legend e.g. I / O

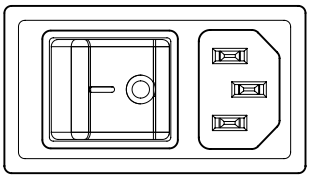

Characteristic magnetic Release

C0	Standard, no other features
T1	1 pole, slow
T2	2 pole, slow
F1	1 pole, fast
F2	2 pole, fast

Variants

Circuit Breaker				Connector					
Rated Current [A]	Rocker colour	Illumination	Magnetic Release	Protection Class	Color	Mounting	IP-Protection		Order Number
10	orange transparent	illuminated	none	I	black	Snap-in mounting	IP40		3-107-924
10	white	non-illuminated	none	I	black	Screw-on version	IP67 / IP54		3-108-454
10	black	non-illuminated	none	I	black	Screw version B	IP40		3-108-463
10	white	non-illuminated	none	I	black	Snap-in mounting	IP40		3-109-713
10	white	non-illuminated	none	I	black	Screw version B	IP40		3-109-714
10	white	non-illuminated	none	I	black	Screw version A	IP40		3-109-715
10	white	non-illuminated	none	II	black	Screw-on version	IP67 / IP54		3-140-609
10	white	non-illuminated	none	I	white	Screw-on version	IP67 / IP54		3-140-691
10	white	non-illuminated	none	II	white	Screw-on version	IP67 / IP54		3-140-712
10	white	non-illuminated	Slow	I	black	Screw-on version	IP67 / IP54		3-153-377
10	white	non-illuminated	Fast	I	black	Screw-on version	IP67 / IP54		3-153-699
10	white	non-illuminated	Slow	I	white	Screw-on version	IP67 / IP54		3-153-701
10	white	non-illuminated	Fast	I	white	Screw-on version	IP67 / IP54		3-153-714
12	white	non-illuminated	none	II	black	Screw version A	IP40		3-153-961
15	white	non-illuminated	none	I	black	Snap-in mounting	IP40		3-109-716
15	white	non-illuminated	none	I	black	Screw version B	IP40	●	3-109-717
15	white	non-illuminated	none	I	black	Screw version A	IP40		3-109-718
15	white	non-illuminated	none	I	black	Screw-on version	IP67 / IP54		3-109-719
15	white	non-illuminated	Slow	I	black	Screw version B	IP40		3-153-704
15	white	non-illuminated	Fast	I	black	Screw version B	IP40		3-153-716
15	white	non-illuminated	none	I	black	Screw-on version	IP67 / IP54		3-155-235

Availability for all products can be searched real-time: https://www.schurter.com/en/info-center/support-tools/stock-check-distributors

More information in the HTML data sheet on the variant table

Packaging unit 10 Pcs

Accessories

Description

RC320
Rear Cover for Power Entry Module

Mating Outlets/Connectors shuttered

	Category / Description	
	Connector Overview complete	
	4783 Mounting: Power Cord, 3 x 1 mm² / 3 x 18 AWG, Cable, Connector: IEC C13	4783
	Power Cord Overview complete	
	SC54C13KS, Overview, V-Lock cord retaining, diverse Connector IEC C13, diverse, black	SC54C13KS

24.06.2026

The specifications, descriptions and illustrations indicated in this document are based on current information. All content is subject to modifications and amendments. Information furnished is believed to be accurate and reliable. However, users should independently evaluate the suitability and test each product selected for their own applications.