Metal Switch, Switching Voltage up to 250 VAC

black (RC)

MO

LA

See below:
Approvals and Compliances

Description

- Mechanical switch with stroke in different versions LA (Latching) and MO (Momentary)
- With torsion protection for easier handling
- Equipped with flat plug in terminals to permit fast connection
- MSM MO: Protection class IP67 frontside

Unique Selling Proposition

- Attractive tactile feedback
- High quality materials
- Long life span
- Color marking

Characteristics

- Housing material in high-quality stainless steel or aluminium
- Switching voltage from 30 VDC to 250 VAC
  Switching current from 0.1 A to 16 A
- For use in harsh environments

References

Further versions on request (MOQ 500 St.)

Weblinks

pdf data sheet, html datasheet, General Product Information, CAD-Drawings, Product News, Detailed request for product

Technical Data

Electrical Data	
Micro Switch	see table of variants
Impulse Withstand Voltage (ESD)	4 kV
Mechanical Data	
Actuating Force (MO/LA)	4.5 N / 10 N
Actuating Travel (MO/LA)	1.0 mm / 5.2 mm
Lifetime	1.5 million actuations
Shock Protection	IK07 to IK10
Mounting screw torque Plastic Nut	max. 3.5 Nm

Climatical Data	
Operating Temperature	-25 to 85 °C (LA until -20°C)
Storage Temperature	-25 to 85 °C (LA until -20°C)
Salt Spray Test (acc. to DIN 50021-SS)	24 h / 48 h / 96 h Residence Time
Material	
Housing	Aluminium / Stainless Steel
Actuator	Aluminium / Stainless Steel / Ceramics
Seal Ring	NBR70
Plastic Nut	PA, UL94

Approvals and Compliances

Detailed information on product approvals, code requirements, usage instructions and detailed test conditions can be looked up in Details about Approvals

SCHURTER products are designed for use in industrial environments. They have approvals from independent testing bodies according to national and international standards. Products with specific characteristics and requirements such as required in the automotive sector according to IATF 16949, medical technology according to ISO 13485 or in the aerospace industry can be offered exclusively with customer-specific, individual agreements by SCHURTER.

Product standards

Product standards that are referenced

Organization	Design	Standard	Description
DIN	Designed according to	DIN EN 61058-1	Switches for appliances. Part 1. General requirements
UL	Designed according to	UL 1054	UL standard for safety special-use switches

Application standards

Application standards where the product can be used

Organization	Design	Standard	Description
IEC	Suitable for applications acc.	IEC/UL 62368-1	Audio/video, information and communication technology equipment - Part 1: Safety requirements

Compliances

The product complies with following Guide Lines

Identification	Details	Initiator	Description
CE	CE declaration of conformity	SCHURTER AG	The CE marking declares that the product complies with the applicable requirements laid down in the harmonisation of Community legislation on its affixing in accordance with EU Regulation 765/2008.
UK CA	UKCA declaration of conformity	SCHURTER AG	The UKCA marking declares that the product complies with the applicable requirements laid down in the British Amendment of Regulation (EC) 765/2008.
RoHS	RoHS	SCHURTER AG	Directive RoHS 2011/65/EU, Amendment (EU) 2015/863
REACH	REACH	SCHURTER AG	On 1 June 2007, Regulation (EC) No 1907/2006 on the Registration, Evaluation, Authorization and Restriction of Chemicals 1 (abbreviated as "REACH") entered into force.

Dimension [mm]

MSM LA double-pole

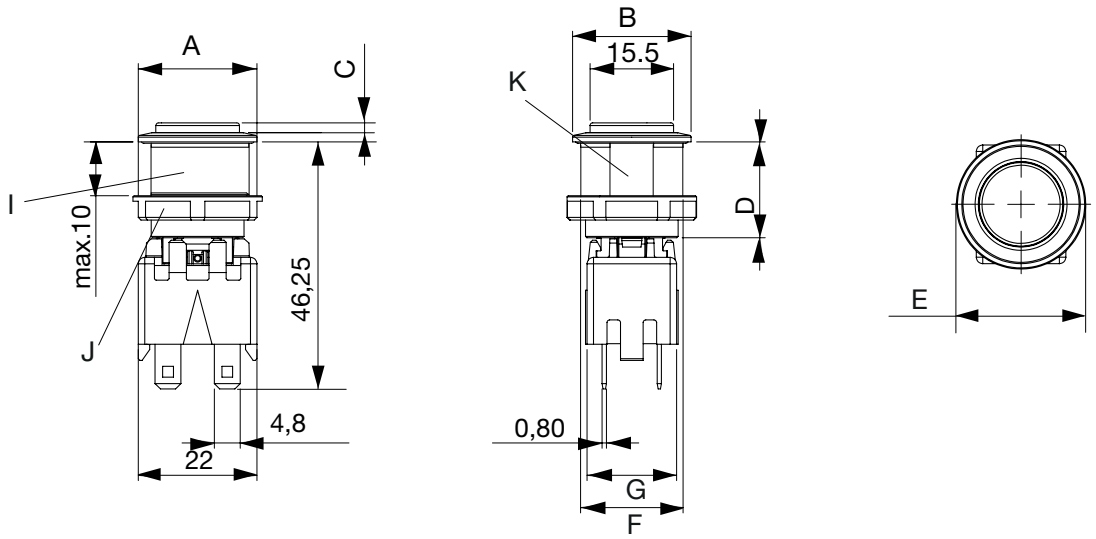

Switching Element LA single-pole

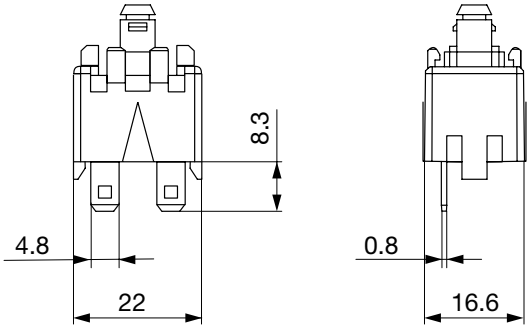

Legend to MSM Latching

Diameter (mm)	19	22
A	22	26
B	22	25
C	1.3	1.3
D	18.3	18.3
E	24	17.7
F	M19x0.75	M22x1
G	16.6	17.2
I	O-Ring	
J	Nut	
K	Anti-rotation lock	

MSM MO single-pole

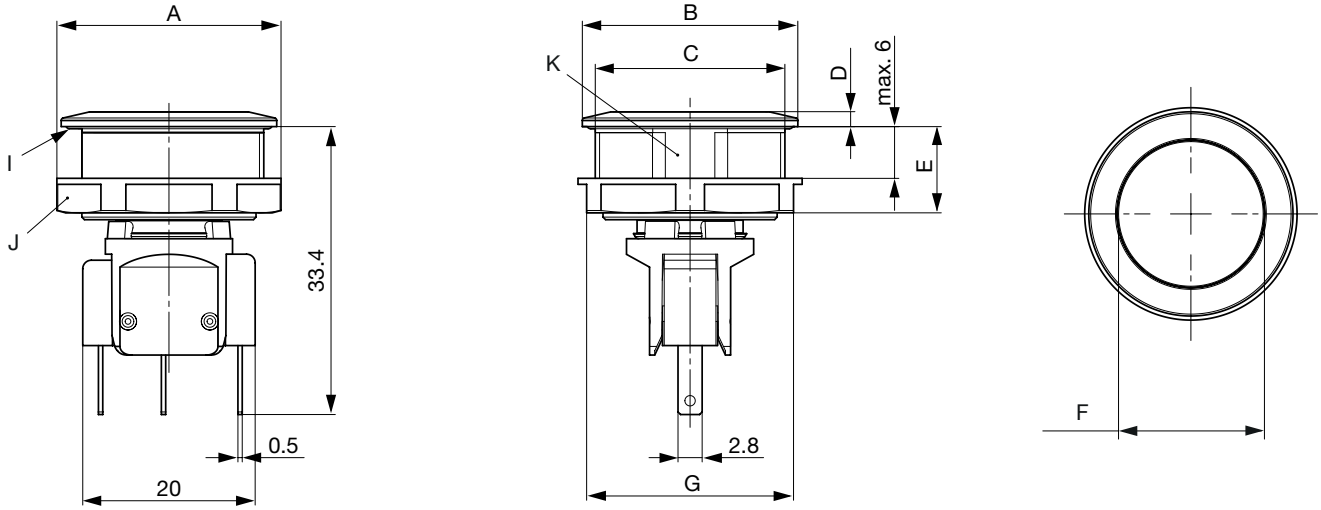

MSM MO double-pole

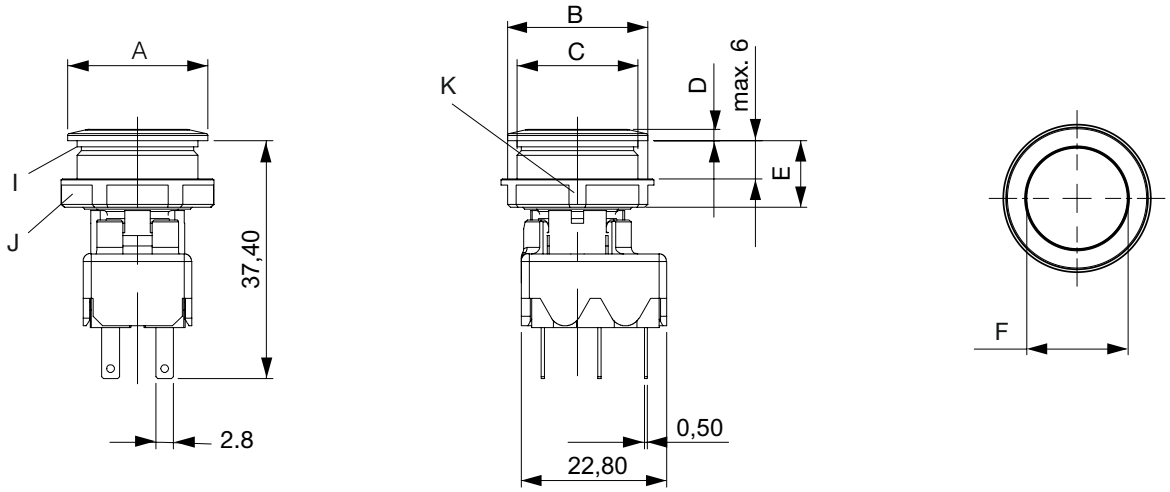

MSM 22 SI

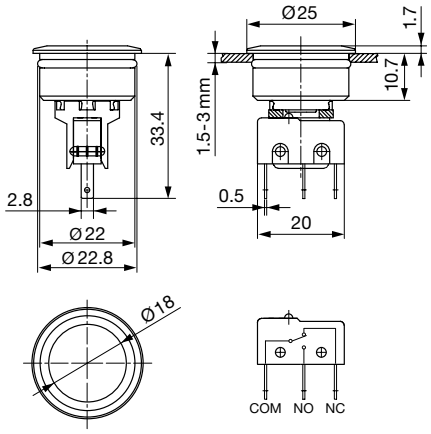

Legend to MSM Momentary

Diameter (mm)	16	19	22	24	30
A	20	24	26	27.6	24.5
B	19	22	25	24	34
C	M16x1	M19x0.75	M22x1	M24x1	M30x1.5
D	1.74	1.75	1.74	2.04	2.04
E	10	10.5	10	10.5	11
F	12.8	15.8	18	19.9	25
I	O-Ring				
J	Nut				
K	Anti-rotation lock				

Tolerance Range

Actuator Tolerance Range

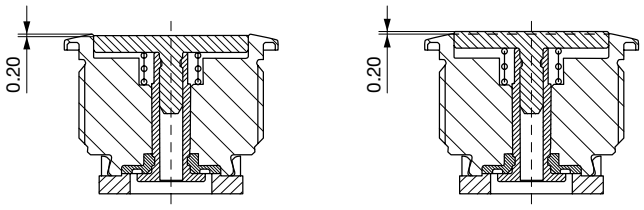

The mounting tolerance range of the actuator varies from 0.2 mm projection length and 0.2 mm short length to the housing edge. The slanting position of the actuator can range within this tolerance.

Dimension

With torsion protection

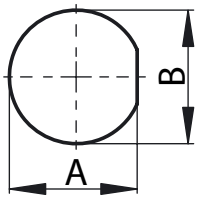

Without torsion protection

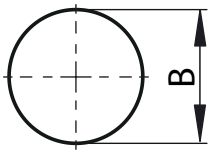

Diameter (mm)	A	B
16	15.15+0.05	16.1 +0.1
19	18.15+0.05	19.1 +0.1
22	21.15+0.05	22.1 +0.1
24	23.50+0.05	24.1 +0.1
30	28.85+0.05	30.1 +0.1

Assembly Instructions

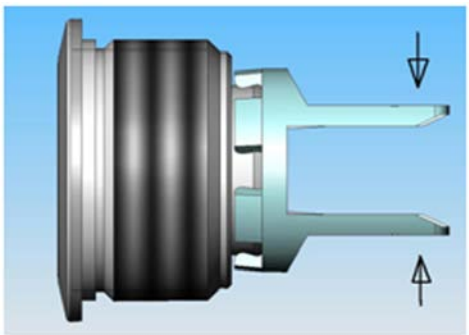

During assembly, the protruding bars of the holder should not be pressed together.

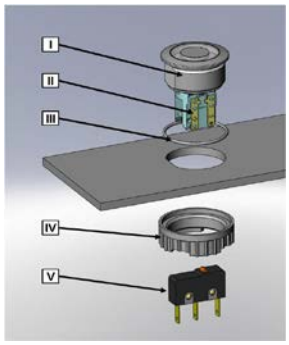

I Housing
II Flat Pin Terminal (Illumination)
III O-Ring gasket
IV Nut (Nut type see Dimensions)
V Module Switching Contact

Installation Instruction:
1. Place the gasket accurately on the actuator housing. Then mount the actuator housing assembly into the panel.
2. Tighten the screw nut according to the torque instructions.
3. Clasp the module switching contact into the micro switch holder of the actuator housing.

Installation information:
- The power supply and the configuration of the flat pin terminals have to be installed correctly for the illumination and micro switch function.
- Insulate the terminals as required. Fully insulated plug-in sleeves are recommended.
- Installation instructions according to VDE-standard DIN VDE 0100-100 or alternatively IEC 60354 standard.
- During assembly, the protruding bars of the holder should not be pressed together.

Diagrams

SPDT

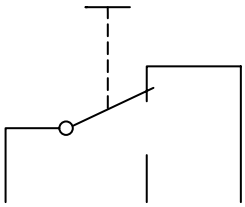

DPDT

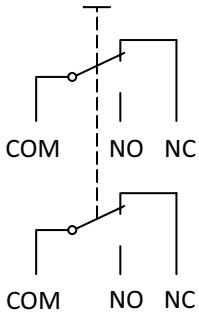

DPST

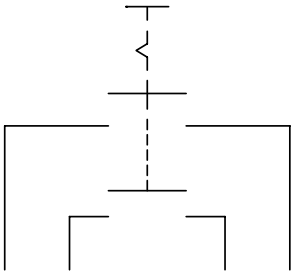

SPST

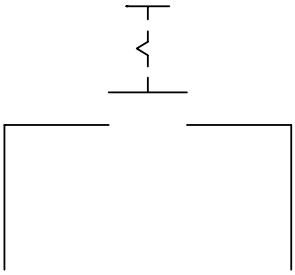

Micro Switch

Micro Switch	Switch type	Contact Material	Switching Voltage	Switching current	Rated Switching	Lifetime	Contact Resistance	Insulation Resistance	Duration of Bounce
0.1 A, IP40	MO	Au	max. 30 VDC	max. 0.1 A	3 W	0.2 Mio.	< 50 mΩ	> 100 MΩ	< 5 ms
0.1 A, IP67	MO		max. 250 VAC	max. 0.1 A	25 W	0.05 Mio.			
5 A / 125 VAC bzw. 3 A / 250 VAC, IP40	MO	Ag	max. 125 / 250 VAC	max. 5 / 3 A	750 W	0.2 Mio.	< 30 mΩ	> 100 MΩ	< 5 ms
6 A, IP67	MO		max. 250 VAC	max. 5 A	1250 W	0.01 Mio.			
10 A, IP40	MO	Ag	max. 250 VAC	max. 10 A	2500 W	0.05 Mio.	< 30 mΩ	> 100 MΩ	< 5 ms
10 A, IP67	MO		max. 250 VAC	max. 10 A	2500 W	0.01 Mio.			
12 A, IP40	LA	Ag	max. 250 VAC	max. 12 A	3000 W	0.05 Mio.	< 100 mΩ		
16 A, IP40	LA	Ag	max. 250 VAC	max. 16 A	4000 W	0.04 Mio.	< 100 mΩ	> 100 MΩ	

Marking

The last three digits in the order number define the lettering:	
000	No Lettering
001-074	Standard Lettering
101-	Customized Lettering

Order Index Lettering

Laser Marking			
001 =**A**	021 =**U**	041 =**÷**	061 =**EIN**
002 =**B**	022 =**V**	042 = ✳	062 =**AUS**
003 =**C**	023 =**W**	043 =**=**	063 =**AUF**
004 =**D**	024 =**X**	044 = #	064 =**AB**
005 =**E**	025 =**Y**	045 = ↔	065 =**ON**
006 =**F**	026 =**Z**	046 = ↕	066 =**OFF**
007 =**G**	027 =**0**	047 = →	067 =**UP**
008 =**H**	028 =**1**	048 = ←	068 =**DOWN**
009 =**I**	029 =**2**	049 = ↓	069 =**HIGH**
010 =**J**	030 =**3**	050 = ↑	070 =**LOW**
011 =**K**	031 =**4**	051 = %	071 =**ON/OFF**
012 =**L**	032 =**5**	052 = √	072 =**START**
013 =**M**	033 =**6**	053 =**CTRL**	073 =**RESET**
014 =**N**	034 =**7**	054 =**RETURN**	074 =2023-04-18
015 =**O**	035 =**8**	055 =**SHIFT**	075 =2023-04-18
016 =**P**	036 =**9**	056 =**LOCK**	076 =2023-04-18
017 =**Q**	037 =**+**	057 =**STOP**	077 =2023-04-18
018 =**R**	038 =**-**	058 =**ENTER**	
019 =**S**	039 =**.**	059 =**BACK**	
020 =**T**	040 = x	060 =**LINE**	
Please note that the font size depends on the number of characters			

Order number key

M	S	M	-	19	-	MO	NX	A10	-	B	-	A	A0	-	A	PI	0GN	00R	0	A0	-	S0	NC	B	-	SO	NC	NF	0	000	-	C
				1		2	3	4		5		6	7		8	9	10	11	12	13		14	15	16		17	18	19	20	21		22

Diameter			1
16 mm	=	16	
19 mm	=	19	
22 mm	=	22	
30 mm	=	30	

Switch type			2
Latching	=	LA	
Momentary	=	MO	

Switch function			3
Change over contact	=	NX	
Normally open	=	NO	

Rated current			4
100 mA	=	A10	
5 A	=	05A	
6 A	=	06A	
10 A	=	10A	
12 A	=	12A	
16 A	=	16A	

Contact configuration			5
SPST	=	A	
SPDT	=	B	
DPST	=	C	
DPDT	=	D	

Contact material			6
Gold	=	A	
Silver	=	B	

Terminal switch			7
QC 6.3 x 0.5	=	A1	
QC 4.8 x 0.8	=	A4	
Cable - 200 mm	=	B0	
Cable - 500 mm	=	B1	
Wire harness	=	F1	

Switch IP specification			8
None	=	0	
IP40	=	A	
IP67	=	B	

Appearance			9
Color ring	=	RC	
None	=	00	

Appearance Color			10
Red	=	0RD	
Green	=	0GN	
Blue	=	0BL	
Yellow	=	0YL	
White	=	0WT	
Orange	=	0OR	
Black	=	0BK	
None	=	000	

Supply voltage illumination			11
None	=	000	

Illumination sub type			12
Standard	=	0	
Scaled	=	2	

Terminal illumination			13
None	=	00	

Housing material			14
Stainless Steel	=	S0	
Aluminium	=	A0	

M	S	M	-	19	-	MO	NX	A10	-	B	-	A	A0	-	A	PI	0GN	00R	0	A0	-	S0	NC	B	-	SO	NC	NF	0	000	-	C
				1		2	3	4		5		6	7		8	9	10	11	12	13		14	15	16		17	18	19	20	21		22

Housing color			15
Neutral	=	NC	
Red	=	RD	
Green	=	GN	
Black	=	BK	

Mounting			16
None	=	0	
Thread (M) without antirotation protection	=	A	
Thread (M) with antirotation protection	=	B	
Snap 1.5 mm	=	D	
Snap 2 mm	=	E	

Actuator material			17
Ceramics	=	C0	
Stainless Steel	=	S0	
Aluminium	=	A0	

Actuator color			18
White	=	WT	
Neutral	=	NC	
Red	=	RD	
Green	=	GN	
Black	=	BK	

Actuator style			19
No finger guide	=	NF	

Lettering type			20
None	=	0	
Laser	=	1	

Marking type			21
None	=	000	

See in the table 'Order Index Lettering'

Accessories			22
None	=	0	
Hex nut stainless steel with O-Ring	=	A	
Hex nut plastic with O-Ring	=	C	
Hex nut plastic with O-Ring and screw terminal	=	D	

All Variants

Diameter	Switch type	Switching current	Electrical contact	IP specification backside	Appearance	Appearance Color	Housing material	Order Number
16	MO	100 mA	SPDT	IP40	non-illuminated	-	Stainless Steel	1241.6611.1110000
16	MO	5 A	SPDT	IP40	non-illuminated	-	Stainless Steel	1241.6611.1120000
16	MO	10 A	SPDT	IP40	non-illuminated	-	Stainless Steel	1241.6611.1130000
16	MO	100 mA	SPDT	IP40	non-illuminated	-	Stainless Steel	1241.6612.1110074
16	MO	5 A	SPDT	IP40	non-illuminated	-	Stainless Steel	1241.6612.1120000
16	MO	100 mA	SPDT	IP40	non-illuminated	-	Stainless Steel	3-102-649
16	MO	5 A	SPDT	IP40	non-illuminated	-	Stainless Steel	3-102-650
16	MO	10 A	SPDT	IP40	non-illuminated	-	Stainless Steel	3-102-651
16	MO	5 A	SPDT	IP40	Color ring	red	Stainless Steel	3-136-737
16	MO	5 A	SPDT	IP40	Color ring	green	Stainless Steel	3-136-738
16	MO	5 A	SPDT	IP40	Color ring	blue	Stainless Steel	3-136-740
16	MO	5 A	SPDT	IP40	Color ring	black	Stainless Steel	3-136-741
19	MO	100 mA	SPDT	IP40	non-illuminated	-	Stainless Steel	1241.6621.1110000
19	MO	5 A	SPDT	IP40	non-illuminated	-	Stainless Steel	1241.6621.1120000
19	MO	10 A	SPDT	IP40	non-illuminated	-	Stainless Steel	1241.6621.1130000
19	MO	6 A	SPDT	IP67	non-illuminated	-	Stainless Steel	1241.6621.1180000
19	MO	5 A	SPDT	IP40	non-illuminated	-	Stainless Steel	1241.6622.1120000
19	MO	5 A	SPDT	IP40	non-illuminated	-	Alu red	1241.6622.3120000
19	MO	5 A	SPDT	IP40	non-illuminated	-	Alu red	1241.6622.3120066
19	MO	5 A	SPDT	IP40	non-illuminated	-	Alu green	1241.6622.5120000
19	MO	5 A	SPDT	IP40	non-illuminated	-	Alu green	1241.6622.5120065
19	MO	5 A	DPDT	IP40	non-illuminated	-	Stainless Steel	1241.6921.1120000
19	MO	5 A	DPDT	IP40	non-illuminated	-	Stainless Steel	1241.6922.1120000
19	MO	5 A	SPDT	IP40	non-illuminated	-	Stainless Steel	1241.7021.1120000
19	MO	6 A	SPDT	IP67	non-illuminated	-	Stainless Steel	1241.7021.1180000
19	LA	16 A	SPST	IP40	non-illuminated	-	Stainless Steel	3-100-987
19	LA	16 A	DPST	IP40	non-illuminated	-	Stainless Steel	3-100-989
19	MO	5 A	SPDT	IP40	Color ring	red	Stainless Steel	3-136-752
19	MO	5 A	SPDT	IP40	Color ring	green	Stainless Steel	3-136-753
19	MO	5 A	SPDT	IP40	Color ring	blue	Stainless Steel	3-136-754
19	MO	5 A	SPDT	IP40	Color ring	black	Stainless Steel	3-136-755
19	LA	12 A	SPST	IP40	non-illuminated	-	Stainless Steel	1241.6821.1110000
19	LA	12 A	DPST	IP40	non-illuminated	-	Stainless Steel	1241.6821.1120000
22	MO	100 mA	SPDT	IP40	non-illuminated	-	Stainless Steel	1241.6631.1110000
22	MO	5 A	SPDT	IP40	non-illuminated	-	Stainless Steel	1241.6631.1120000
22	MO	10 A	SPDT	IP40	non-illuminated	-	Stainless Steel	1241.6631.1130000
22	MO	6 A	SPDT	IP67	non-illuminated	-	Stainless Steel	1241.6631.1180000
22	MO	100 mA	SPDT	IP40	non-illuminated	-	Stainless Steel	1241.6632.1110000
22	MO	5 A	SPDT	IP40	non-illuminated	-	Stainless Steel	1241.6632.1120000
22	MO	5 A	SPDT	IP40	non-illuminated	-	Alu red	1241.6632.3120000
22	MO	5 A	SPDT	IP40	non-illuminated	-	Alu red	1241.6632.3120057
22	MO	5 A	SPDT	IP40	non-illuminated	-	Alu red	1241.6632.3120066
22	MO	5 A	SPDT	IP40	non-illuminated	-	Alu green	1241.6632.5120000
22	MO	5 A	SPDT	IP40	non-illuminated	-	Alu green	1241.6632.5120061
22	MO	5 A	SPDT	IP40	non-illuminated	-	Alu green	1241.6632.5120065
22	MO	5 A	SPDT	IP40	non-illuminated	-	Stainless Steel	1241.6695.1120000
22	MO	5 A	SPDT	IP40	non-illuminated	-	Stainless Steel	1241.6699.1120000
22	MO	5 A	DPDT	IP40	non-illuminated	-	Stainless Steel	1241.6931.1120000
22	MO	5 A	DPDT	IP40	non-illuminated	-	Stainless Steel	1241.6932.1120000

Diameter	Switch type	Switching current	Electrical contact	IP specification backside	Appearance	Appearance Color	Housing material	Order Number
22	MO	100 mA	SPDT	IP40	non-illuminated	-	Stainless Steel	1241.7031.1110000
22	MO	5 A	SPDT	IP40	non-illuminated	-	Stainless Steel	1241.7031.1120000
22	MO	10 A	SPDT	IP40	non-illuminated	-	Stainless Steel	1241.7031.1130000
22	MO	5 A	SPDT	IP40	non-illuminated	-	Stainless Steel	1241.7032.1120000
22	LA	16 A	SPST	IP40	non-illuminated	-	Stainless Steel	3-101-001
22	LA	16 A	DPST	IP40	non-illuminated	-	Stainless Steel	3-101-012
22	MO	5 A	SPDT	IP40	Color ring	red	Stainless Steel	3-136-756
22	MO	5 A	SPDT	IP40	Color ring	green	Stainless Steel	3-136-757
22	MO	5 A	SPDT	IP40	Color ring	blue	Stainless Steel	3-136-758
22	MO	5 A	SPDT	IP40	Color ring	black	Stainless Steel	3-136-759
22	MO	5 A	SPDT	IP40	Color ring	yellow	Stainless Steel	3-136-760
22	MO	5 A	SPDT	IP40	Color ring	white	Stainless Steel	3-136-761
22	MO	5 A	SPDT	IP40	Color ring	orange	Stainless Steel	3-136-762
22	MO	100 mA	SPDT	IP40	Color ring	red	Stainless Steel	3-136-763
22	MO	100 mA	SPDT	IP40	Color ring	green	Stainless Steel	3-136-764
22	MO	100 mA	SPDT	IP40	Color ring	blue	Stainless Steel	3-136-765
22	MO	100 mA	SPDT	IP40	Color ring	black	Stainless Steel	3-136-766
22	MO	100 mA	SPDT	IP40	Color ring	yellow	Stainless Steel	3-136-767
22	MO	100 mA	SPDT	IP40	Color ring	white	Stainless Steel	3-136-768
22	MO	100 mA	SPDT	IP40	Color ring	orange	Stainless Steel	3-136-769
22	LA	12 A	SPST	IP40	non-illuminated	-	Stainless Steel	1241.6831.1110000
22	LA	12 A	DPST	IP40	non-illuminated	-	Stainless Steel	1241.6831.1120000
24	MO	100 mA	SPDT	IP40	non-illuminated	-	Stainless Steel	1241.6641.1110000
24	MO	5 A	SPDT	IP40	non-illuminated	-	Stainless Steel	1241.6641.1120000
24	MO	10 A	SPDT	IP40	non-illuminated	-	Stainless Steel	3-128-295
24	MO	100 mA	SPDT	IP40	non-illuminated	-	Stainless Steel	3-132-395
24	MO	5 A	SPDT	IP40	non-illuminated	-	Stainless Steel	3-132-396
30	MO	100 mA	SPDT	IP40	non-illuminated	-	Stainless Steel	1241.6661.1110000
30	MO	5 A	SPDT	IP40	non-illuminated	-	Stainless Steel	1241.6661.1120000
30	MO	10 A	SPDT	IP40	non-illuminated	-	Stainless Steel	1241.6661.1130000
30	MO	100 mA	SPDT	IP67	non-illuminated	-	Stainless Steel	1241.6661.1170000
30	MO	5 A	DPDT	IP40	non-illuminated	-	Stainless Steel	1241.6961.1120000
30	MO	5 A	DPDT	IP40	non-illuminated	-	Stainless Steel	1241.6962.1120000
30	MO	5 A	SPDT	IP40	Color ring	red	Stainless Steel	3-136-770
30	MO	5 A	SPDT	IP40	Color ring	green	Stainless Steel	3-136-771
30	MO	5 A	SPDT	IP40	Color ring	blue	Stainless Steel	3-136-772
30	MO	5 A	SPDT	IP40	Color ring	black	Stainless Steel	3-136-773

Most Popular.

Availability for all products can be searched real-time:https://www.schurter.com/en/Stock-Check/Stock-Check-SCHURTER

Packaging unit 10 pcs. In box or packed in air cushion bags

- Actuating elements in ESD safe packaging
- Screw nuts and sealing rings in a bag (enclosd in the box)
- Micro switches in a bag (enclosed in the box)

Accessories

	Description
	MSM_Cover Protection cover for MSM 19 and MSM 22

26.05.2023

The specifications, descriptions and illustrations indicated in this document are based on current information. All content is subject to modifications and amendments. Information furnished is believed to be accurate and reliable. However, users should independently evaluate the suitability and test each product selected for their own applications.