BARRIER MOUNT



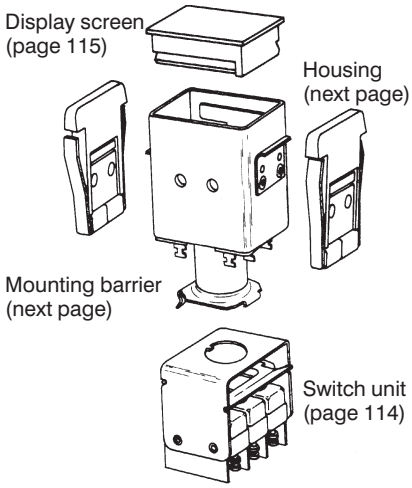

Mounting barriers attach to either the long or short sides of the housing. They have spring clips which grip the panel. Mounting barriers also separate display screens to protect against inadvertent operation. Multiple units can be attached together in a strip and snapped into a panel slot; or they can be mounted individually.

FLANGE MOUNT

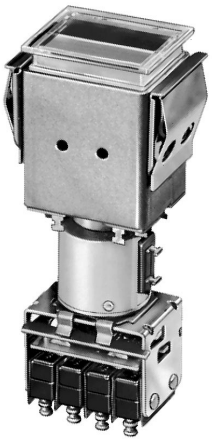

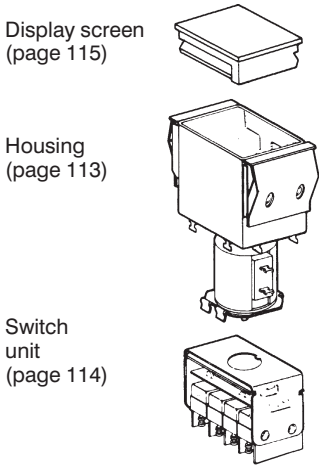

Flange mount units have mounting clips ready-attached to the housing. They can be individually installed or replaced; and enable use of an overlay panel, if desired. Groupings can be separated by optional spacing barriers.

MODULES ASSEMBLE EASILY

All modules are ordered as separate items which snap together for easy assembly.

FEATURES

- Easy-to-assemble modules provide thousands of display/control combinations
- Up to 4 incandescent lamps
- 1, 2, 3, or 4-section display
- Transmitted or projected color
- Integral hold-in coil option provides remote released contacts. Pull-in coils (flange mount only) enable remote actuation
- Switch guard accessory.

CHANGE LAMPS OR FILTERS FROM PANEL FRONT

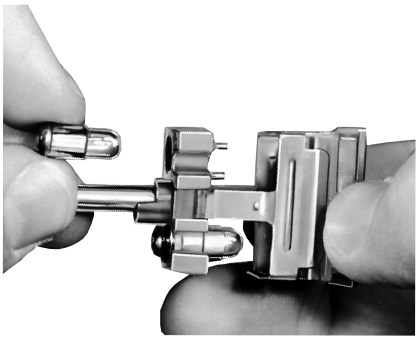

Without tool. Remove display screen/lampholder assembly from 2C200 operator-indicator (or 2F200 indicator). Unit is keyed to maintain proper orientation when replacing. Use only flange base T-1¾ lamps with 2C200 and 2F200 devices.

LAMPS AND FILTERS

Order lamps and filters for projected color from page 111.

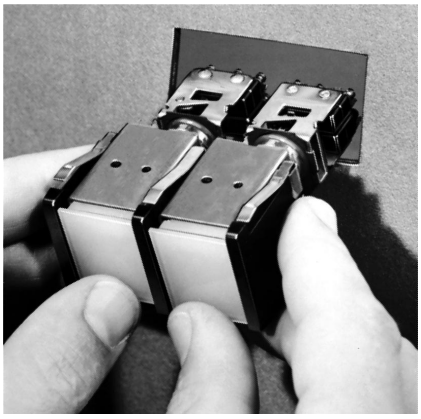

Barriers on long sides

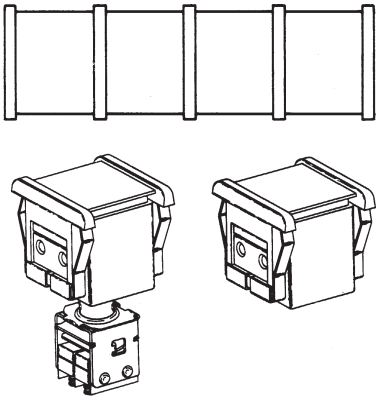

Barriers on short sides

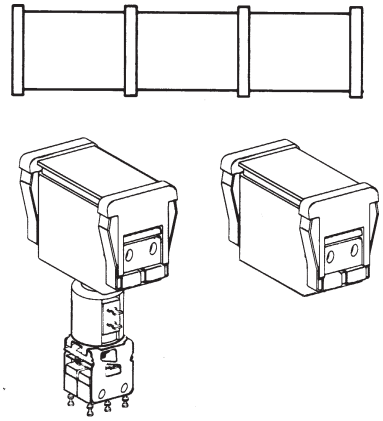

BARRIER MOUNT MODULES

Barrier mount assemblies are identical in panel appearance. Operator-indicator housings have spring clips for attaching switch modules. This feature is not provided with indicator housings.

Barriers are necessary for mounting. They can be specified for attachment to the long or short side of the housing, as stated in the order guides.

BARRIER MOUNT HOUSING ORDER GUIDE

See ''Application Data'' for typical bailing circuits for coil-equipped modules.

Barriers Attach On:	No. of Lamp Sockets	Tool Not Required	
		Operator-Indicator	Indicator Only
Long Sides of Housing	2 (A & C) 4 (A-D)	2C207 2C209	
Short Sides of Housing	2 (A & C) 4 (A-D)	2C201 2C203	2F203

MOUNTING BARRIER ORDER GUIDE

For strip mounting, specify one more barrier than the number of units in the group.

Mounting Barrier Type	For Panel Thickness	Catalog Listings	
		Gray	Black
Attach to Long Sides	.06-.19 in. (1,52-4,83 mm)	2B2	2B4
Attach to Short Sides	.06-.19 in. (1,52-4,83 mm)	2B1	2B3

Note: Panels .19 in. (1,52 mm) thick require the .06-.19 in. (1,52-4,83 mm) type barriers.

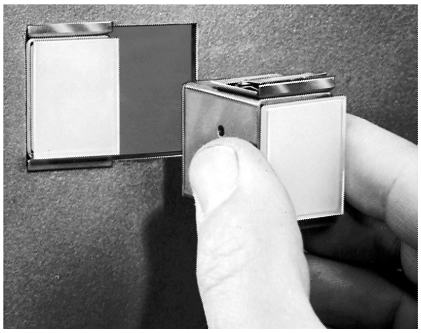

Flanges on long sides

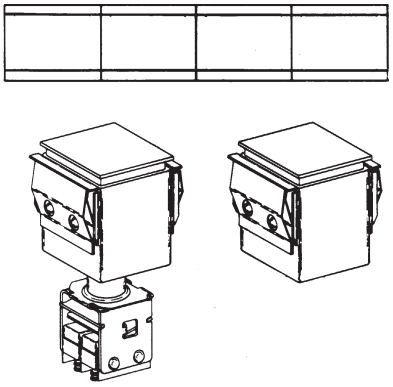

FLANGE MOUNT MODULES

Flange mount assemblies are identical in panel appearance. Operator-indicator housings have spring clips for switch modules attachment (not provided with indicator housings).

Barriers are not required, since the panel mounting clips are ready-attached to flange sides of the housings. However, spacing barriers can be used for color-coding. They also aid in preventing inadvertent operation of two screens with one push.

Mounting dimensions on page 114.

FLANGE MOUNT HOUSING ORDER GUIDE

See ''Application Data'' for typical bailing circuits for coil-equipped modules.

Flanges On:	No. of Lamp Sockets	Tool Not Required	
		Operator-Indicator	Indicator Only
Long Sides of Housing	2 (A & C) 4 (A-D)	2C204 2C206	2F206

SPACING BARRIER ORDER GUIDE

For .06-31 in. (1,5-7,9 mm) thick panels.

Spacing Barrier Type	Catalog Listings	
	Gray	Black
For Long Flange Housing	2B9	2B18

SWITCH MODULES

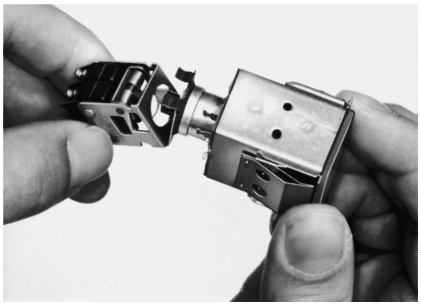

Interchangeable type 2D switch modules attach to spring clips on the bottom of operator-indicator housings. There is a wide selection of circuitry, electrical ratings, operating actions and terminations.

For mounting dimensions, see page 115.

SM SUBMINIATURE MULTI-SPDT SWITCH MODULES



Momentary action



Alternate action

SM switch modules offer a choice of two momentary action styles, one with a pronounced touch-feedback, the other with low operating force for rapid repeat actuation. Also available with alternate-action and combination momentary/alternate action modules. Extra length turret solder terminals.

ELECTRICAL RATING
Silver contacts:
30 VDC: 5 amps res. sea level or 50,000 ft, 3 amps ind. sea level, 2.5 amps 50,000 ft. Max. inrush, 24 amps.
UL and CSA rating for basic switch: 5 amps, 125 or 250 VAC.

Gold contacts:
30 VDC: 0.5 amp ind., 1 amp res., sea level and 50,000 ft. Max. inrush, 2 amps.

SM SWITCH MODULE ORDER GUIDE

No. of SPDT Circuits	Momentary Action Touch-Feedback Type Silver Contacts	Alternate Action Low Force Type Silver Contacts
1	2D100	2D118
2	2D2	2D26
4	2D9	2D33

V3 COMPACT SPDT/DPDT SWITCH MODULES



V3 switch modules have screw terminals with lockwashers. Quick-connect terminals (not shown) are also available. When used with short-flange operator indicators, add spacing barriers to prevent interference.

ELECTRICAL RATING
30 VDC: 10 amps ind.* sea level, 6 amps ind.,* 50,000 ft. Motor load, 6 amps.** UL and CSA rating for basic switch: 10 amps, ⅓ Hp, 125 or 250 VAC; ½ amp, 125 VDC; ¼ amp, 250 VDC.

* Inductive currents in accordance with AN3179.
** Motor load rating based on starting current.

V3 SWITCH MODULE ORDER GUIDE

No. of SPDT Circuits	Momentary Action
1	2D70
2	2D72

ONE-PIECE DISPLAY SCREEN OPTIONS

Single-section

These translucent solid color display screens are single-section/one piece construction

SINGLE-SECTION/ ONE-PIECE SCREENS ORDER GUIDE

	Standard
Red	2A1
Yellow	2A2
Green	2A3
White	2A5

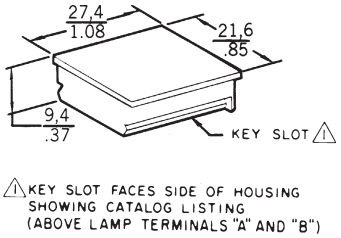

THREE-PIECE DISPLAY SCREEN OPTIONS

Single-section

These screens have transparent colored or colorless caps, transparent colorless legend inserts and translucent colored bases.

SINGLE-SECTION/THREE-PIECE SCREENS ORDER GUIDE

Color	Colorless Caps
Red	2A81
Yellow	2A82
Green	2A85
White	2A70
Amber	2A114

NOTE:
Add **–L** to catalog listing if button is to be legended.

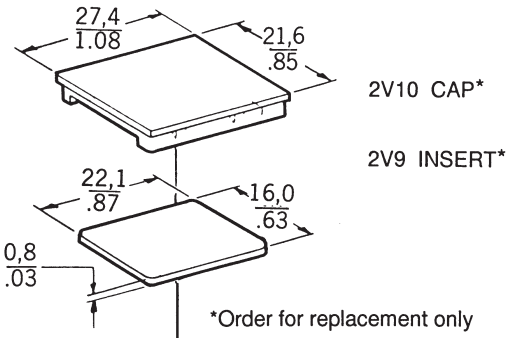

*Order for replacement only

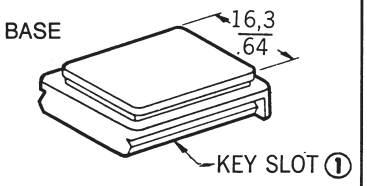

① Key slot faces side of housing showing catalog listing (above lamp terminals "A" and "B")

TWO, THREE AND FOUR-SECTION DISPLAY SCREENS

Dotted lines show 3-section base configuration

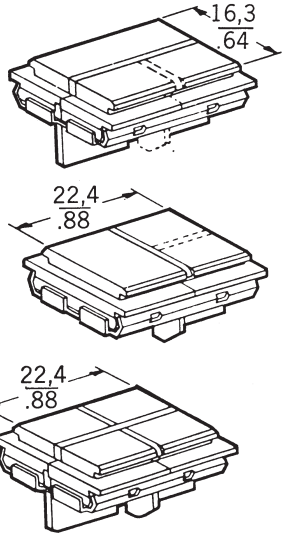

Silicone rubber baffles prevent light spillage from one section to another. Screen caps and legend inserts are transparent colorless. Bases are translucent colored.

For more information on 2, 3, and 4-section display screens, contact the MICRO SWITCH Application Center.

Honeywell

SERIES 2A, 2L, and 2W
LEGEND ORDER SHEET/PRODUCT SPECIFICATION

FO-62308-H

ACCOUNT NO. 126-284

1. Complete ORDER SHEET for EACH NEW or REPEAT ORDER. *Pg ____ of ____*
2. For each different legend, fill in a Diagram below as follows:
   a. Determine proper oreintation of the legend (HORIZONTAL or VERTICAL).
   b. For SPLIT SCREEN ORDER, draw line(s) to show where the split occurs and indicate BASE COLOR for each section.
   c. PRINT or TYPE the required legend in the diagrams provided.
   d. Fill in QUANTITY and FIGURE NO, in the columns to the right.
   e. Indicate keyed corner on all 2L listings.

Form No Shaded Area	HORIZONTAL								VERTICAL							
	1		2		3		4		1		2		3		4	
TYPE SIZE	MAX. CHAR /LINE	MAX. LINES /AREA	MAX. CHAR. /LINE	MAX. LINES /AREA	MAX. CHAR /LINE	MAX. LINES /AREA	MAX. CHAR /LINE	MAX. LINES /AREA	MAX. CHAR. /LINE	MAX. LINES /AREA	MAX. CHAR. /LINE	MAX. LINES /AREA	MAX. CHAR. /LINE	MAX. LINES /AREA	MAX. CHAR. /LINE	MAX. LINES /AREA
5/64	12	5	6	5	12	2	6	2	8	6	4	6	8	3	4	3
7/64	9	4	4	4	9	2	4	2	6	5	3	5	6	2	3	2
9/64	7	3	3	3	7	1	3	1	5	4	2	4	5	2	2	2
13/64	5	2	2	2	5	1	2	1	3	3	1	3	3	1	1	1
5/16	3	1	1	1	3	1	1	1	2	2	1	2	2	1	1	1

LEGEND AREAS

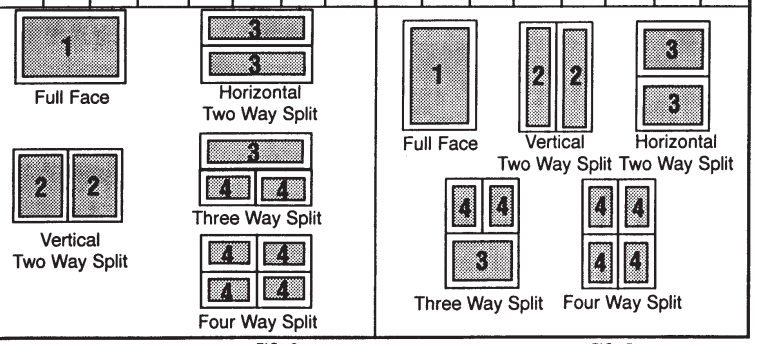

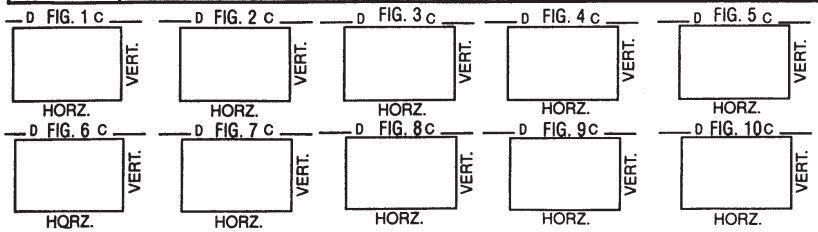

Catalog Listing	
Customer P.O. No.	Customer Dwg. No.
MICRO SWITCH Sales Order	Line Number / Schedule No.

Customer: _____

Address: _____

(state) (city)

Quantity Ordered	Fig No.	Size	Ink Color BLK	Ink Color WHT	Customer Part Number

NOTE: Round, three and four-way splits are not available on 2W Series Display Screens. Only black and white type is available.

Modified Gothic lettering (A thru Z). numerals (0 thru 9) and Symbols below available in 5/64, 7/64, 9/64, 13/64 and 5/16.

A3
Modified Gothic

STANDARD SYMBOLS AVAILABLE

.	,	:	;	!	?	'	_	"	/	(	)	*	&
$	¢	#	%	°	+	-	±	÷	x	=	≠	>	<
→	↑	↓	←	C_R	1/4	1/2	3/4	1/3	2/3	@	∞		

(Signature) _____ (Date) _____

LEGEND INFORMATION

Honeywell MICRO SWITCH Division provides legend service on the inserts supplied with three-piece screens only. To specify your needs, add -**L** to the catalog listings (example: 2A81-L) and use Legend Order Sheet (Form FO-62308), shown on facing page. Reproduce it on your office copier.

On any one insert, only one size of type is provided in either black or white. After legending, the insert is assembled to the display screen. The type face used is ''Modified Gothic''.

LAMPS

T-1¾ incandescent lamps are available from MICRO SWITCH in 28 volt versions.

Use of neon lamps is not recommended. Light output is approximately 30% of an incandescent lamp. Also, a neon lamp will not illuminate blue or green filters or display screens due to the absence of these colors from the neon light spectrum.

LAMP POLICY

The 28 volt lamps are offered as a convenience to customers. Honeywell MICRO SWITCH Division does not extend any warranty as to such lamps, and cannot guarantee to provide lamps from specific manufacturers. Any technical or quality questions regarding such lamps should be directed to the lamp manufacturer.

COLOR FILTERS FOR PROJECTED COLOR

Projected color is achieved by using white buttons and color filters over clear lamps. When lamps are lighted, white button takes on color projected by the filters.

Filters used with type 2C200 and 2F200 housings (no-tool relamping) slip over lamp sockets in lampholder.

SCREEN/LEGEND COLORS

The chart below shows recommended display screen and legend color combinations for optimum legibility.

Screen Color	Legend Lettering	
	Black	White
Red		x
Green		x
Yellow	x	
Amber	x	x
White	x	

LAMP ORDER GUIDE

Catalog Listing	Base Style	Type No.	Rating			Life/Voltage†	
			Volts	Amps	Life in Hours	Volts	Expected Life (Hrs.)
2E1	Flange	327	28	.040	1000	24.0 26.0 30.0	7,500 2,800 400

† These are experimental continuous life test results supplied by a lamp manufacturer for reference only. Intermittent operation may reduce these figures as much as 50%. Ratings are based on median values of current and life.

Wattage should not exceed 2.4 watts (2 lamps) per switch, for continuous illumination.

FILTER ORDER GUIDE

Filter Style	Red	Green	Amber	White*
For Type 2C200 and 2F200 Housings	2G12	2G14	2G16	2G17

* Has blue tint to compensate for high yellow content of incandescent lamps at low voltages.

SWITCH GUARD ACCESSORY
A hinged cover on the switch guard helps avoid inadvertent operation of the display screen. It is installed in place of the transparent slide-on cap furnished with three-piece screen. Note: When used with pull-in coil devices, specify the 2C200 operator-indicator housings which have the no-tool relamping feature.

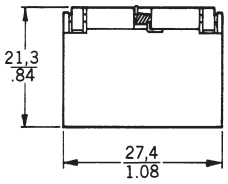



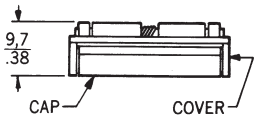

Key: 0,0 = mm / 0.00 = inches

Barrier mount assembly with guard installed. (Can also be used with all flange mount units.)

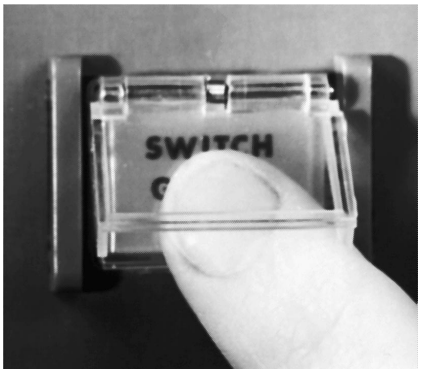

Guard requires a ‘‘lift-to-push’’ response to operate switch normally.

Order Catalog Listing **2H20**

MOUNTING DIMENSIONS (For reference only)

Long barrier operator-indicators

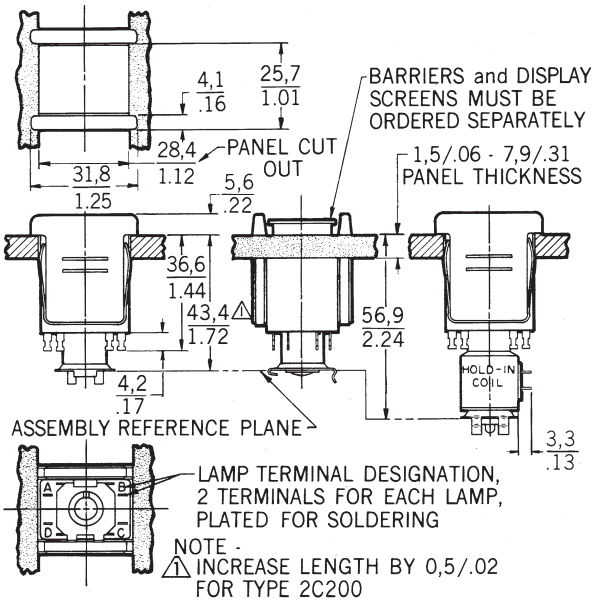

Short barrier operator-indicators

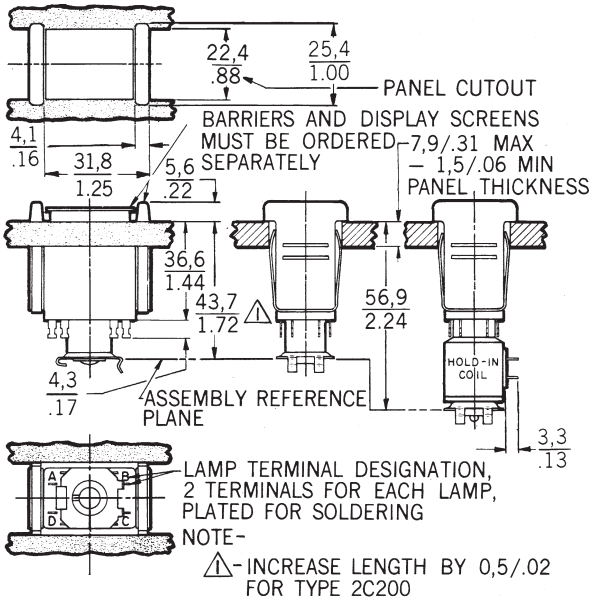

Short barrier indicators **Long barrier indicators**

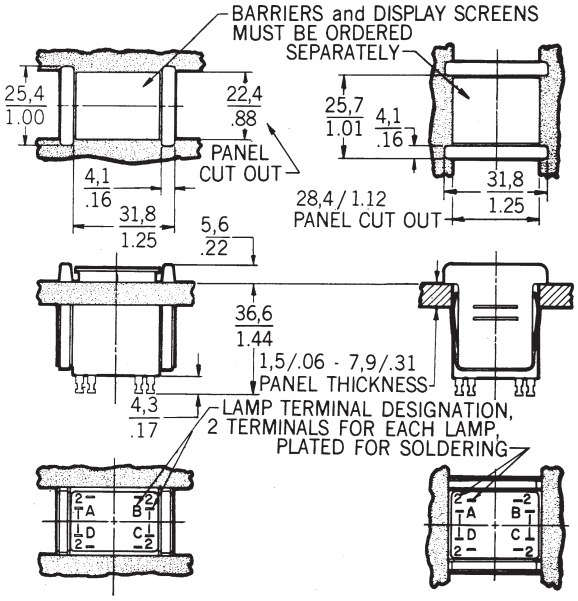

Mounting barriers

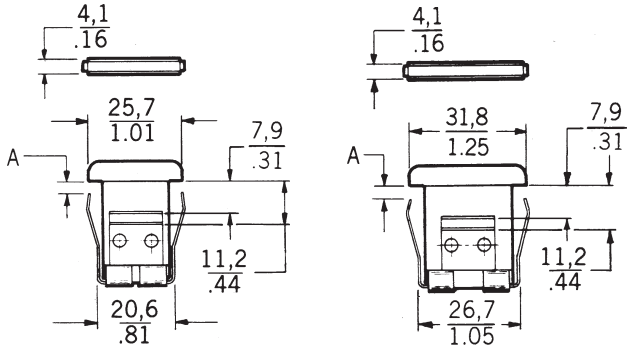

Key: 0,0 = mm / 0.00 = inches.

A	Panel Thickness
1,5/.06 4,6/.18	1,5-4,81/.06-.19 4,8-7,9/.19-.31

Length Of Panel Cutout*

Type of Indicator or Operator-Indicator		Number of Units						
		1	2	3	4	5	6	7
Short Barrier	mm	36,09	68,00	99,87	131,72	163,60	195,48	227,36
	in.	1.421	2.677	3.932	5.186	6.441	7.696	8.951
Long Barrier	mm	30,00	55,78	81,58	106,34	133,12	159,90	184,68
	in.	1.181	2.196	3.212	4.226	5.241	6.256	7.271

* Nominal dimensions, ±0,25 mm/0.10 in. (In 5% of the cases, the cutout will be undersized for the build-up of assembled units and will require enlargement.

Pushbuttons

MOUNTING DIMENSIONS (For reference only)

Long flange operator-indicators

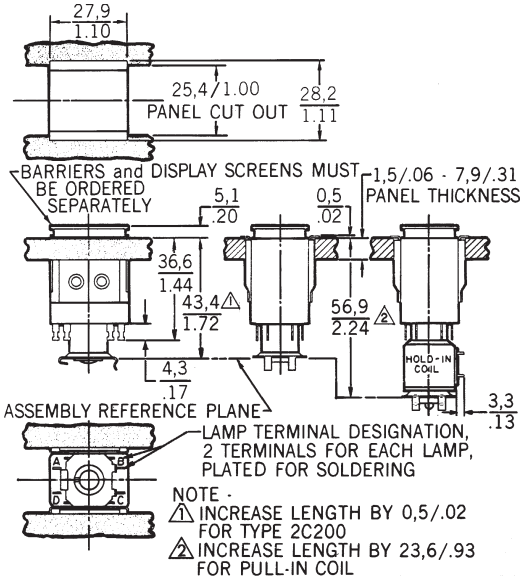

Long flange indicators

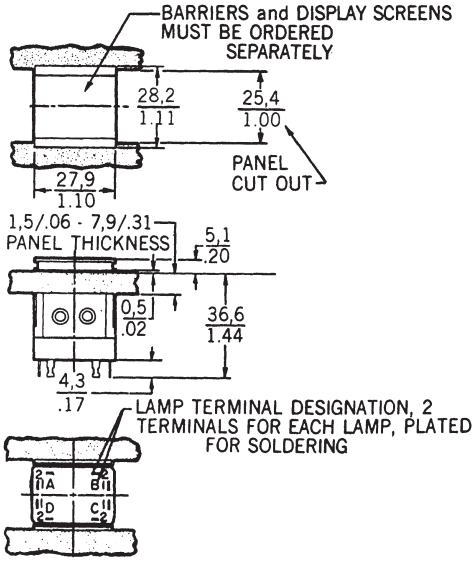

Spacing barriers

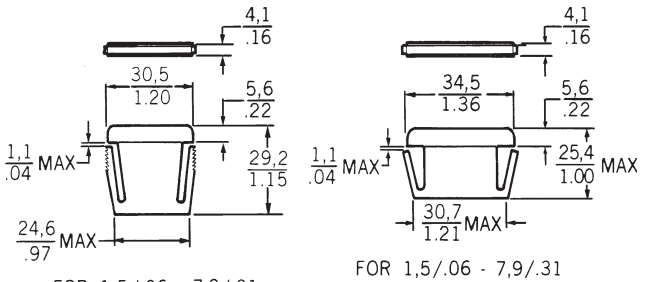

Key: 0,0 = mm / 0.00 = inches.

Length Of Panel Cutout*

Add 4,19 mm/.165 in. to length for each optional spacing barrier used.

Type of Indicator or Operator-Indicator		Number of Units						
		1	2	3	4	5	6	7
Long Flange	mm	27,94	55,75	83,57	111,36	139,17	166,98	194,77
	in.	1.1	2.195	3.290	4.384	5.479	6.574	7.668

*Nominal dimensions, ±0,25 mm/0.10 in. (In 5% of the cases, the cutout will be undersized for the build-up of assembled units and will require enlargement.

MOUNTING DIMENSIONS (For reference only)

SM Switch Modules

Momentary

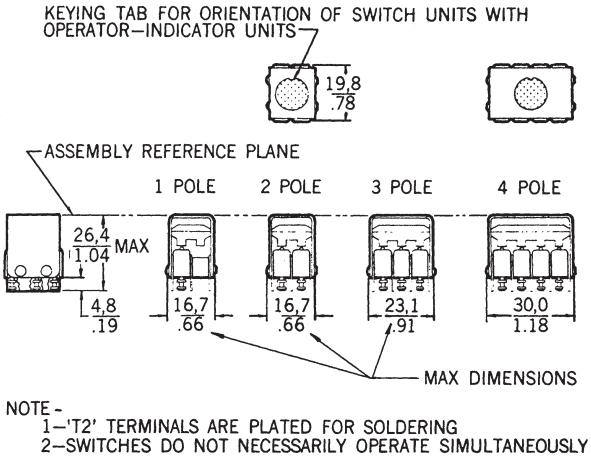

NOTE -
1–'T2' TERMINALS ARE PLATED FOR SOLDERING
2–SWITCHES DO NOT NECESSARILY OPERATE SIMULTANEOUSLY

Alternate-Action

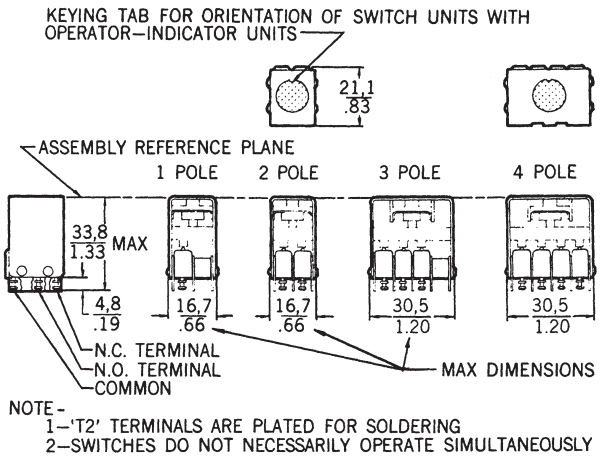

NOTE -
1–'T2' TERMINALS ARE PLATED FOR SOLDERING
2–SWITCHES DO NOT NECESSARILY OPERATE SIMULTANEOUSLY

V3 Switch Modules

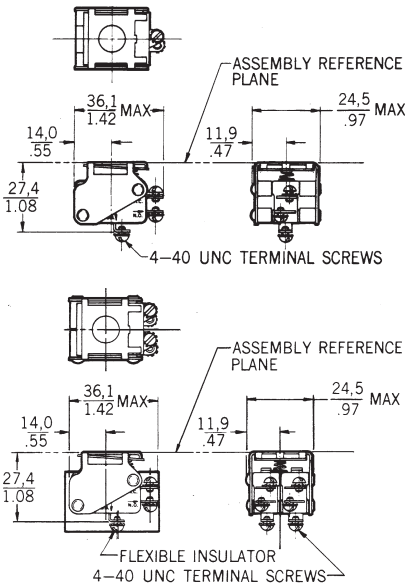

Pushbuttons