Data sheet

S2C-SMT 3.50/08/90LF 3.2AU BK RL

Weidmüller Interface GmbH & Co. KG
Klingenbergstraße 26
D-32758 Detmold
Germany

www.weidmueller.com

Product image



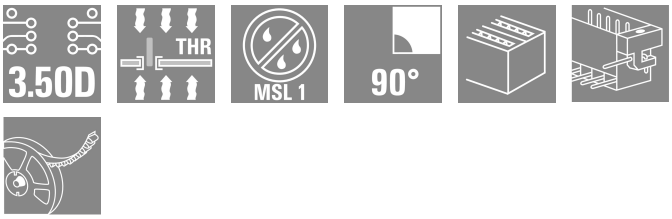

High-temperature-resistant male header

- Finger-safe
- Can be plugged into female plug B2CF 3.50 PUSH IN
- Plug-in direction is perpendicular or parallel to the circuit board (180° / 90°)
- Housing variants: closed (G) and with solder flange (LF)
- Packed either in a box (BX) or on anti-static tape-on-reel (RL)
- Suitable for reflow and wave soldering
- applications
- Pin length of either 1.5 mm or 3.2 mm

General ordering data

Version	PCB plug-in connector, male header, Solder flange, THT/THR solder connection, 3.50 mm, Number of poles: 8, 90°, Solder pin length (l): 1.5 mm, Au (Gold), black, Tape
Order No.	2654830000
Type	S2C-SMT 3.50/08/90LF 3.2AU BK RL
GTIN (EAN)	4050118663792
Qty.	235 items
Product data	IEC: 200 V / 13.4 A UL: 150 V / 9.5 A
Packaging	Tape

Data sheet

S2C-SMT 3.50/08/90LF 3.2AU BK RL

Weidmüller Interface GmbH & Co. KG
Klingenbergstraße 26
D-32758 Detmold
Germany

www.weidmueller.com

Technical data

Approvals

Approvals	
UL File Number Search	UL Website
Certificate No. (cURus)	E60693

Dimensions and weights

Depth	14.2 mm	Depth (inches)	0.5591 inch
Height	12.3 mm	Height (inches)	0.4843 inch
Height of lowest version	10.8 mm	Width	21 mm
Width (inches)	0.8268 inch	Net weight	2.69 g

Environmental Product Compliance

RoHS Compliance Status	Compliant without exemption
REACH SVHC	No SVHC above 0.1 wt%

System specifications

Product family	OMNIMATE Signal - series B2C/S2C 3.50 - 2-row	Type of connection	Board connection
Mounting onto the PCB	THT/THR solder connection	Pitch in mm (P)	3.50 mm
Pitch in inches (P)	0.138 "	Outgoing elbow	90°
Number of poles	8	Number of solder pins per pole	1
Solder pin length (l)	1.5 mm	Solder pin dimensions	d = 1.0 mm, Octagonal
Solder eyelet hole diameter (D)	1.3 mm	Solder eyelet hole diameter tolerance (D)	+ 0,1 mm
Outside diameter of solder pad	2.1 mm	Template aperture diameter	19 mm
L1 in mm	10.50 mm	L1 in inches	0.413 "
Number of rows	1	Pin series quantity	2
Touch-safe protection acc. to DIN VDE 57 106	finger-safe unplugged/ back-of-hand-safe plugged	Touch-safe protection acc. to DIN VDE 0470	IP20 plugged/ IP10 unplugged
Can be coded	Yes	Plugging force/pole, max.	5 N
Pulling force/pole, max.	5 N		

Material data

Insulating material	LCP GF	Colour	black
Colour chart (similar)	RAL 9011	Insulating material group	IIIb
Comparative Tracking Index (CTI)	≥ 175	Moisture Level (MSL)	1
UL 94 flammability rating	V-0	Contact material	Cu-alloy
Contact surface	Au (Gold)	Layer structure of solder connection	2...5 µm Sn / 1...3 mm Ni
Layer structure of plug contact	2...5 µm Sn / 1...3 µm Ni / 0.8...1.2 µm Au	Storage temperature, min.	-40 °C
Storage temperature, max.	70 °C	Operating temperature, min.	-50 °C
Operating temperature, max.	-120 °C	Temperature range, installation, min.	-40 °C
Temperature range, installation, max.	120 °C		

Rated data acc. to IEC

tested acc. to standard	IEC 60664-1, IEC 61984	Rated current, min. number of poles (Tu=20°C)	13.4 A
Rated current, min. number of poles (Tu=40°C)	12 A	Rated voltage for surge voltage class / pollution degree II/2	200 V

S2C-SMT 3.50/08/90LF 3.2AU BK RL

Weidmüller Interface GmbH & Co. KG
Klingenbergstraße 26
D-32758 Detmold
Germany

www.weidmueller.com

Technical data

Rated voltage for surge voltage class / pollution degree III/2	160 V	Rated voltage for surge voltage class / pollution degree III/3	80 V
Rated impulse voltage for surge voltage class/ pollution degree II/2	2.5 kV	Rated impulse voltage for surge voltage class/ pollution degree III/2	2.5 kV
Rated impulse voltage for surge voltage class/ contamination degree III/3	2.5 kV	Short-time withstand current resistance	3 x 1s with 80 A

Rated data acc. to CSA

Rated voltage (Use group B / CSA)	150 V	Rated voltage (Use group C / CSA)	50 V
Rated voltage (Use group D / CSA)	150 V	Rated current (Use group B / CSA)	9.5 A
Rated current (Use group C / CSA)	9.5 A	Rated current (Use group D / CSA)	9.5 A

Rated data acc. to UL 1059

Institute (cURus)	CURUS	Certificate No. (cURus)	E60693
Rated voltage (Use group B / UL 1059)	150 V	Rated voltage (Use group C / UL 1059)	50 V
Rated current (Use group B / UL 1059)	9.5 A	Rated current (Use group C / UL 1059)	9.5 A
Rated current (Use group D / UL 1059)	9.5 A	Reference to approval values	Specifications are maximum values, details - see approval certificate.

Packing

ESD Level packaging	static dissipative	Packaging	Tape
VPE length	332.00 mm	VPE width	332.00 mm
VPE height	52.00 mm	Tape depth (T2)	15.10 mm
Tape width (W)	44 mm	Tape pocket depth (K0)	14.60 mm
Tape pocket height (A0)	14.50 mm	Tape pocket width (B0)	32.90 mm
Tape pocket separation (P1)	20.00 mm	Tape hole separation (E)	1.75 mm
Tape pocket separation (F)	20.20 mm	Tape reel diameter ⌀ (A)	330 mm
Surface resistance	Rs = 109 - 1012 Ω	Width Pick & Place Pad (WPPP)	10 mm
Length Pick & Place Pad (LPPP)	15.6 mm	Protrusion 1 Pick & Place Pad (L01 (PPP))	7.8 mm
Protrusion 2 Pick & Place Pad (P02 (PPP))	7.8 mm		

Important note

IPC conformity	Conformity: The products are developed, manufactured and delivered according international recognized standards and norms and comply with the assured properties in the data sheet resp. fulfill decorative properties in accordance with IPC-A-610 "Class 2". Further claims on the products can be evaluated on request.
Notes	• In accordance with IEC 61984, OMNIMATE-connectors are connectors without breaking capacity (COC). During designated use, connectors are not allowed to be engaged or disengaged when live or under load • Long term storage of the product with average temperature of 50 °C and maximum humidity 70%, 36 months

Classifications

ETIM 8.0	EC002637	ETIM 9.0	EC002637
ETIM 10.0	EC002637	ECLASS 14.0	27-46-02-01
ECLASS 15.0	27-46-02-01		

S2C-SMT 3.50/08/90LF 3.2AU BK RL

Weidmüller Interface GmbH & Co. KG
Klingenbergstraße 26
D-32758 Detmold
Germany

www.weidmueller.com

Drawings

Product image

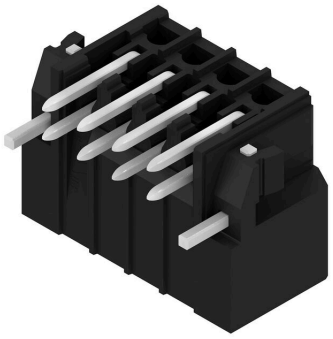

Dimensional drawing

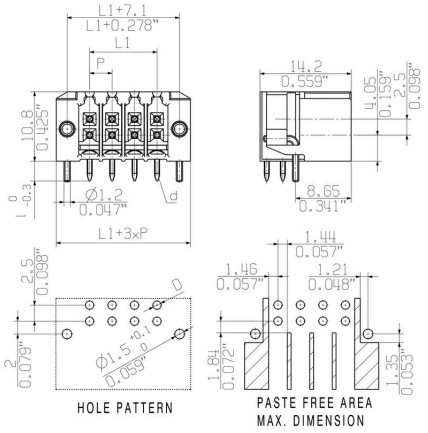

Product benefits

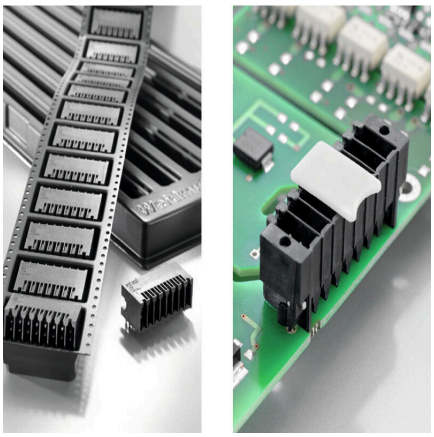

Optimised for the SMT processSafe board-to-board connection

S2C-SMT 3.50/08/90LF 3.2AU BK RL

Weidmüller Interface GmbH & Co. KG
Klingenbergstraße 26
D-32758 Detmold
Germany

www.weidmueller.com

Drawings

Dimensional drawing

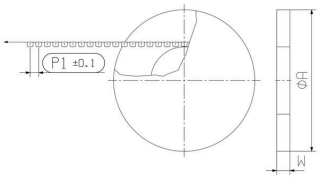

S2C-SMT 3.50/08/90LF 3.2AU BK RL

Weidmüller Interface GmbH & Co. KG
Klingenbergstraße 26
D-32758 Detmold
Germany

www.weidmueller.com

Drawings

Dimensional drawing

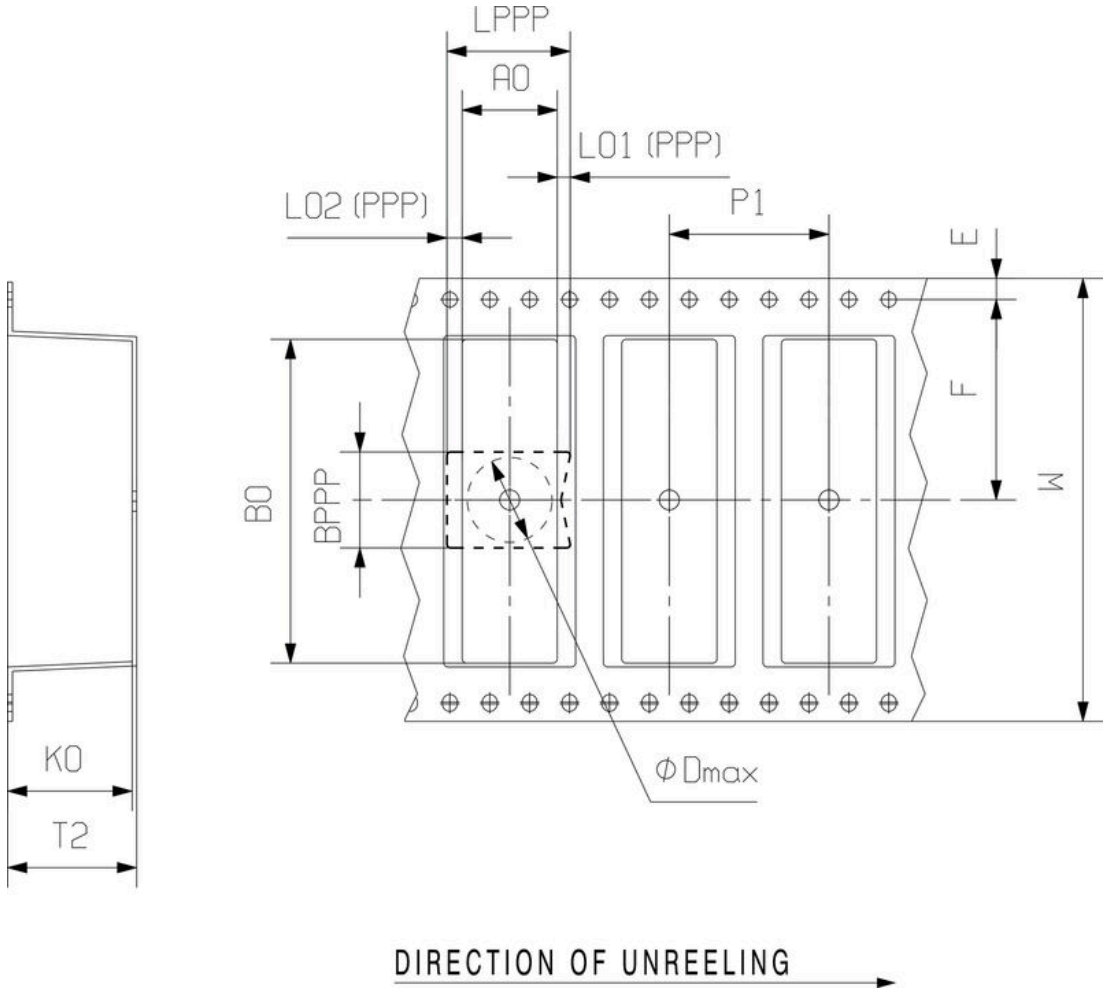

S2C-SMT 3.50/08/90LF 3.2AU BK RL

Weidmüller Interface GmbH & Co. KG
Klingenbergstraße 26
D-32758 Detmold
Germany

www.weidmueller.com

Accessories

LED Light guides



Effective: the link between LED and front panel.
Floodlight indicators allow users to monitor the switching states without requiring a special design: optical plastic directs the light from standard LEDs around a bend into the connectors or through the front plate.
The fibre-optic elements are simply clipped behind the relevant 90° bend male connectors (90° outlet direction).
Versions with different incoming light beam heights achieve maximum light efficiency for LEDs with different designs or heights.
The advantages compared to conventional solutions:
- No additional LED circuit board required behind the front panel
- No "long-legged" LEDs with separate mounting required
- Bent fibre-optic cable line for maximum light efficiency
- Uncomplicated front plate bore holes due to circular shape of outgoing light beam
- Easy to maintain correct clearance and creepage distance
- Can be partitioned for smaller pole numbers

The result: simplified manufacturing process, reduced costs and simplified design

General ordering data

Type	S2L/S2C 3.5 FLA 20/10 S...	Version
Order No.	1814590000	PCB plug-in connector, Accessories, Flood-light display, Transparent,
GTIN (EAN)	4032248302826	Number of poles: 10
Qty.	50 ST	

Coding elements



Only connects what is supposed to be connected: the right connection at the right place.
Coding elements and locking devices clearly assign connecting elements during the manufacturing process and operation
The coding elements and locking devices are inserted prior to assembly or during the cable assembly phase.
The Weidmüller alternative: configure online using the variant configurator to precode prior to delivery.
Incorrect assembly on the circuit board and incorrect plugging of connecting elements is no longer possible.
The advantage: no troubleshooting during manufacture and no operational errors by the user.

General ordering data

Type	B2L/S2L 3.50 KO BK BX	Version
Order No.	1849740000	PCB plug-in connector, Accessories, Coding element, black, Number
GTIN (EAN)	4032248378203	of poles: 1
Qty.	100 ST	

Type	B2L/S2L 3.50 KO OR BX	Version
Order No.	1849730000	PCB plug-in connector, Accessories, Coding element, orange, Number
GTIN (EAN)	4032248378197	of poles: 1
Qty.	100 ST	

S2C-SMT 3.50/08/90LF 3.2AU BK RL

Weidmüller Interface GmbH & Co. KG
Klingenbergstraße 26
D-32758 Detmold
Germany

www.weidmueller.com

Accessories

LED Light guides



Effective: the link between LED and front panel.
Floodlight indicators allow users to monitor the switching states without requiring a special design: optical plastic directs the light from standard LEDs around a bend into the connectors or through the front plate.
The fibre-optic elements are simply clipped behind the relevant 90° bend male connectors (90° outlet direction).
Versions with different incoming light beam heights achieve maximum light efficiency for LEDs with different designs or heights.
The advantages compared to conventional solutions:

- No additional LED circuit board required behind the front panel
- No "long-legged" LEDs with separate mounting required
- Bent fibre-optic cable line for maximum light efficiency
- Uncomplicated front plate bore holes due to circular shape of outgoing light beam
- Easy to maintain correct clearance and creepage distance
- Can be partitioned for smaller pole numbers

The result: simplified manufacturing process, reduced costs and simplified design

General ordering data

Type	S2L/S2C 3.5 FLA 20/10	Version
Order No.	1699580000	PCB plug-in connector, Accessories, Flood-light display, Transparent,
GTIN (EAN)	4008190891350	Number of poles: 10
Qty.	100 ST	