Data Sheet | Item Number: 262-253

4-conductor terminal strip; without push-buttons; with snap-in mounting feet; 3-pole; for plate thickness 0.6 - 1.2 mm; Fixing hole 3.5 mm Ø; 4 mm²; CAGE CLAMP®; 4,00 mm²; gray

https://www.wago.com/262-253

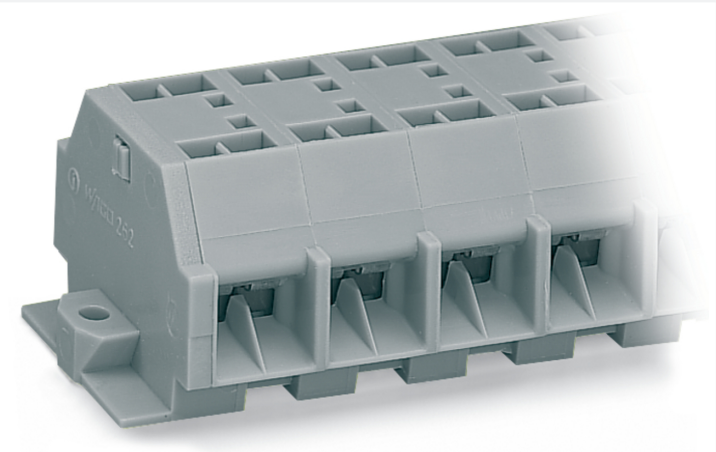

Color: gray

Similar to illustration

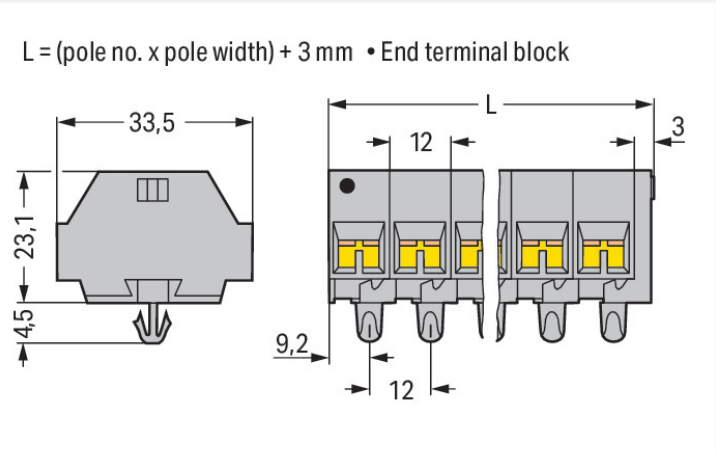

Dimensions in mm

Through terminal block, 262 Series, CAGE CLAMP®

Quick and easy connections are guaranteed with this through terminal block (item number 262-253). Strip lengths must be between 9 and 10 mm when connecting conductors to this through terminal block. Whether in industrial or building applications, our rail-mount through terminal blocks are the perfect solution to quickly and securely connect electrical conductors. Depending on the version, you can use them for either typical through-wiring or potential distribution. This product incorporates conductor terminals and utilizes CAGE CLAMP®. Our highly-rated and maintenance-free CAGE CLAMP® connection makes it easy to connect all conductor types without having to prepare the conductor. For example, you don't need to crimp ferrules. Dimensions: (39 x 33.5 x 27.5) mm (width x height x depth). This through terminal block is suitable for conductor cross sections ranging from 0.08 mm² to 4 mm².

An operating tool is used to operate this mini rail-mount terminal block.

Electrical data

Ratings per IEC/EN	
Nominal voltage (III/3)	690 V
Rated impulse withstand voltage (III / 3)	8 kV
Rated current	32 A
Legend (ratings)	(III / 3) ≙ Overvoltage category III / Pollution degree 3

Approvals per	UL 1059		
Use group	B	C	D
Rated voltage	300 V	300 V	300 V
Rated current	20 A	20 A	10 A

Approvals per	CSA 22.2 No 158		
Use group	B	C	D
Rated voltage	600 V	300 V	600 V
Rated current	5 A	25 A	5 A

General information	
Wiring direction	Side-entry wiring

Continued on next page

Connection Data

Clamping units	12
Total number of potentials	3
Number of levels	1

Connection 1

Connection technology	CAGE CLAMP®
Actuation type	Operating tool
Connectable conductor materials	Copper
Solid conductor	0.08 … 4 mm² / 28 … 12 AWG
Fine-stranded conductor	0.08 … 4 mm² / 28 … 12 AWG
Strip length	9 … 10 mm / 0.35 … 0.39 inches
Pole number	3

Physical data

Width	39 mm / 1.535 inches
Height	33.5 mm / 1.319 inches
Height from the surface	23.1 mm / 0.909 inches
Depth	27.5 mm / 1.083 inches
Module width	12 mm / 0.472 inches

Mechanical data

Design	horizontal type
Mounting type	Snap-in foot
Marking level	Side marking

Material data

Note (material data)	Information on material specifications can be found here
Color	gray
Material group	I
Insulation material (main housing)	Polyamide (PA66)
Flammability class per UL94	V0
Fire load	0.341 MJ
Halogen-free	Yes
Weight	22.4 g

Commercial data

PU (SPU)	100 pcs
Packaging type	Box
Country of origin	DE
GTIN	4044918641654
Customs tariff number	85369010000

Product Classification

UNSPSC	39121410
eCl@ss 10.0	27-14-11-06
eCl@ss 9.0	27-14-11-06
ETIM 9.0	EC001284
ETIM 10.0	EC001284
ECCN	NO US CLASSIFICATION

 Continued on next page

Environmental Product Compliance

RoHS Compliance Status	Compliant,No Exemption

Approvals / Certificates

General approvals

Approval	Standard	Certificate Name
CCA DEKRA Certification B.V.	EN 60998	NTR NL 7661
CSA DEKRA Certification B.V.	C22.2	70010891
KEMA/KEUR DEKRA Certification B.V.	EN 60998	71-102644
UR Underwriters Laboratories Inc.	UL 1059	E45172

Declarations of conformity and manufacturer's declarations

Approval	Standard	Certificate Name
EU-Declaration of Conformity WAGO GmbH & Co. KG	-	-
UK-Declaration of Conformity WAGO GmbH & Co. KG	-	-

Approvals for marine applications

Approval	Standard	Certificate Name
ABS American Bureau of Shipping	-	24-0095979-PDA
BV Bureau Veritas S.A.	EN 60947	07436/G0 BV
DNV GL Det Norske Veritas, Germanischer Lloyd	-	TAE00001V2
LR Lloyds Register	IEC 60998	LR22173030TA
PRS Polski Rejestr Statków	-	TE/1094/880590/23

Downloads

Environmental Product Compliance

Compliance Search

Environmental Product Compliance 262-253

Continued on next page

Documentation

Bid Text			
262-253	19.02.2019	xml 3.08 KB	
262-253	17.08.2017	doc 25.50 KB	

CAD/CAE-Data

CAD data
2D/3D Models 262-253

CAE data
EPLAN Data Portal 262-253
WSCAD Universe 262-253
ZUKEN Portal 262-253

1 Compatible Products

1.1 Optional Accessories

1.1.1 DIN-rail

1.1.1.1 Mounting accessories

Item No.: 210-154
Aluminum carrier rail; 1000 mm long; 18 mm wide; 7 mm high; silver-colored

1.1.2 Ferrule

1.1.2.1 Ferrule

Item No.: 216-241
Ferrule; Sleeve for 0.5 mm² / 20 AWG; insulated; electro-tin plated; electrolytic copper; gastight crimped; acc. to DIN 46228, Part 4/09.90; white

Item No.: 216-141
Ferrule; Sleeve for 0.5 mm² / 20 AWG; uninsulated; electro-tin plated; electrolytic copper; gastight crimped; acc. to DIN 46228, Part 1/08.92

Item No.: 216-242
Ferrule; Sleeve for 0.75 mm² / 18 AWG; insulated; electro-tin plated; electrolytic copper; gastight crimped; acc. to DIN 46228, Part 4/09.90; gray

Item No.: 216-142
Ferrule; Sleeve for 0.75 mm² / 18 AWG; uninsulated; electro-tin plated; electrolytic copper; gastight crimped; acc. to DIN 46228, Part 1/08.92

Item No.: 216-243
Ferrule; Sleeve for 1 mm² / AWG 18; insulated; electro-tin plated; electrolytic copper; gastight crimped; acc. to DIN 46228, Part 4/09.90; red

Item No.: 216-143
Ferrule; Sleeve for 1 mm² / AWG 18; uninsulated; electro-tin plated; electrolytic copper; gastight crimped; acc. to DIN 46228, Part 1/08.92

Item No.: 216-244
Ferrule; Sleeve for 1.5 mm² / AWG 16; insulated; electro-tin plated; electrolytic copper; gastight crimped; acc. to DIN 46228, Part 4/09.90; black

Item No.: 216-144
Ferrule; Sleeve for 1.5 mm² / AWG 16; uninsulated; electro-tin plated; electrolytic copper; gastight crimped; acc. to DIN 46228, Part 1/08.92; silver-colored

Item No.: 216-246
Ferrule; Sleeve for 2.5 mm² / AWG 14; insulated; electro-tin plated; electrolytic copper; gastight crimped; acc. to DIN 46228, Part 4/09.90; blue

 Continued on next page

1.1.3 Installation

1.1.3.1 Mounting accessories

Item No.: 209-137
Mounting adapter; can be used as end stop; 6.5 mm wide; gray

Item No.: 209-120
Mounting foot; can be snapped on terminal blocks with snap-in mounting foot; for mounting on relay-modules; 6.4 mm wide; gray

1.1.4 Jumper

1.1.4.1 Jumper

Item No.: 262-402
Jumper; for conductor entry; 2-way; insulated; gray

1.1.5 Marking

1.1.5.1 Marking strip

Item No.: 210-833
Marking strips; 25 m on roll; 6 mm wide; plain; Self-adhesive; white

1.1.6 Test and measurement

1.1.6.1 Testing accessories

Item No.: 249-140
Test plug module; without locking device; modular; for 4-conductor terminal blocks; gray

1.1.7 Tool

1.1.7.1 Operating tool

Item No.: 210-658
Operating tool; Blade: 3.5 x 0.5 mm; with a partially insulated shaft; angled; short; multicoloured

Item No.: 210-720
Operating tool; Blade: 3.5 x 0.5 mm; with a partially insulated shaft; multicoloured

Item No.: 210-657
Operating tool; Blade: 3.5 x 0.5 mm; with a partially insulated shaft; short; multicoloured

 Continued on next page

Installation Notes

Conductor termination

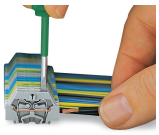

CAGE CLAMP® connection
Inserting a conductor.
With ferruled conductors, it is necessary to use a terminal block one size larger than the conductor's nominal cross-section.

Commoning

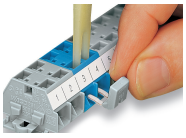

Commoning with comb-style jumper bar.

Installation

Mounting a terminal strip with snap-in feet into holes.

Mounting a terminal strip with snap-in feet onto aluminum rail.

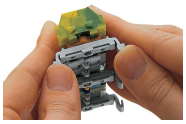

Terminal strip with snap-in mounting feet Snapping a mounting foot (209-120). (Distance between mounting feet: approx. 25 … 30 mm)

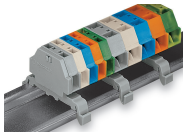

Terminal strip; with snap-in mounting feet; for DIN-35 rail

Terminal strip with snap-in mounting feet, for 0.6 … 1.2 mm plate thickness, 3.5 mm mounting hole diameter (also for 210-154 Aluminum Rail or with 209-120 Mounting Foot for DIN-35 rail)

 Continued on next page

Marking

Marking with self-adhesive marking strips.

Marking by direct printing (upon request).