Data Sheet | Item Number: 2604-3507

PCB terminal block; lever; 4 mm²; Pin spacing 11.5 mm; 7-pole; Push-in CAGE CLAMP®; 4,00 mm²; gray

https://www.wago.com/2604-3507

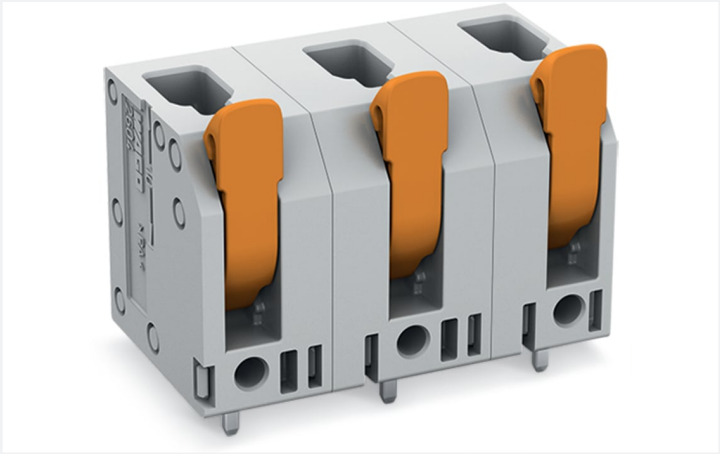

Color: gray

Similar to illustration

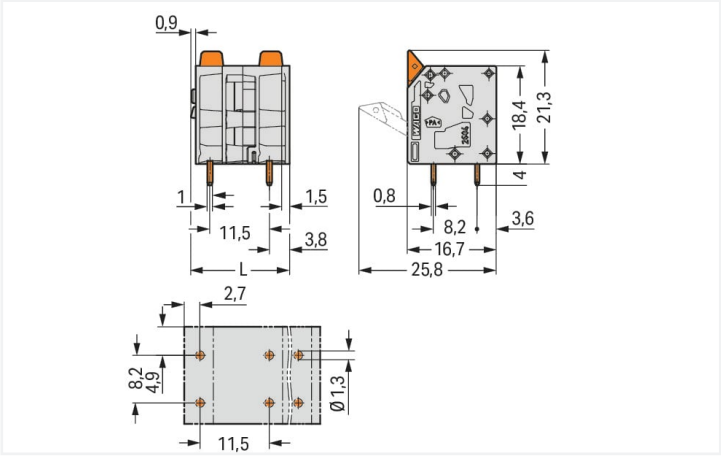

Dimensions in mm

L = (pole no. – 1) x pin spacing + 7.4 mm

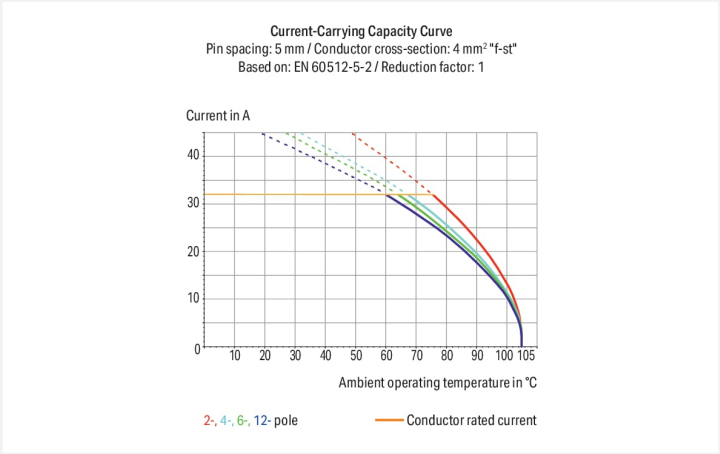

- PCB terminal blocks with Push-in CAGE CLAMP® connection and levers
- Push-in termination of solid and ferruled conductors
- Intuitive and tool-free operation
- Several clamping units can be held open simultaneously, simplifying the connection of multi-core cables
- Testing can be performed both parallel and perpendicular to conductor entry

Notes

Variants:	Other versions (or variants) can be requested from WAGO Sales or configured at https://configurator.wago.com/. Other pole numbers Direct marking Other colors

Electrical data

Ratings per	IEC/EN 60664-1		
Overvoltage category	III	III	II
Pollution degree	3	2	2
Nominal voltage	1000 V	1000 V	1000 V
Rated surge voltage	8 kV	8 kV	8 kV
Rated current	32 A	32 A	32 A

Approvals per	UL 1059		
Use group	B	C	D
Rated voltage	600 V	600 V	-
Rated current	20 A	20 A	-

Approvals per	CSA		
Use group	B	C	D
Rated voltage	600 V	600 V	-
Rated current	20 A	20 A	-

Connection data

Clamping units	7
Total number of potentials	7
Number of connection types	1
Number of levels	1

Connection 1

Connection technology	Push-in CAGE CLAMP®
Actuation type	Lever
Solid conductor	0.2 … 4 mm² / 24 … 12 AWG
Fine-stranded conductor	0.2 … 4 mm² / 24 … 12 AWG
Fine-stranded conductor; with insulated ferrule	0.25 … 2.5 mm²
Fine-stranded conductor; with uninsulated ferrule	0.25 … 2.5 mm²
Fine-stranded conductor; with twin ferrule	0.25 … 1.5 mm²
Strip length	9 … 11 mm / 0.35 … 0.43 inches
Conductor connection direction to PCB	90 °
Pole number	7

Physical data

Pin spacing	11.5 mm / 0.453 inches
Width	76.4 mm / 3.008 inches
Height	25.3 mm / 0.996 inches
Height from the surface	21.3 mm / 0.839 inches
Depth	16.7 mm / 0.657 inches
Solder pin length	4 mm
Solder pin dimensions	0.8 x 1 mm
Drilled hole diameter with tolerance	1.3 $^{(+0.1)}$ mm

PCB contact

PCB contact	THT
Solder pin arrangement	over the entire terminal strip (in-line)
Number of solder pins per potential	2

Material data

Note (material data)	Information on material specifications can be found here
Color	gray
Material group	I
Insulation material (main housing)	Polyamide (PA66)
Flammability class per UL94	V0
Clamping spring material	Chrome-nickel spring steel (CrNi)
Contact material	Electrolytic copper (E_{Cu})
Contact Plating	Tin
Fire load	0.155 MJ
Actuator color	orange
Weight	18.2 g

Continued on next page

Environmental requirements

Limit temperature range	-60 … +105 °C
Processing temperature	-35 … +60 °C
Continuous operating temperature	-60 … +105 °C

Commercial data

eCl@ss 10.0	27-44-04-01
eCl@ss 9.0	27-44-04-01
ETIM 9.0	EC002643
ETIM 8.0	EC002643
PU (SPU)	25 pcs
Packaging type	Box
Country of origin	PL
GTIN	4055143565035
Customs tariff number	85369010000

Environmental Product Compliance

RoHS Compliance Status	Compliant,No Exemption

Approvals / Certificates

General approvals

Approval	Standard	Certificate Name
CB DEKRA Certification B.V.	IEC 60947-7-4	NL-61583
KEMA/KEUR DEKRA Certification B.V.	EN 60947-7-4	71-100535
UL Underwriters Laboratories Inc.	UL 1059	E45172

Downloads

Environmental Product Compliance

Compliance Search

Environmental Product Compliance 2604-3507

 Continued on next page

Documentation

Additional Information

Technical Section	03.04.2019	pdf 2027.26 KB

CAD/CAE-Data

CAD data

2D/3D Models
2604-3507

CAE data

ZUKEN Portal
2604-3507

PCB Design

Symbol and Footprint
via SamacSys
2604-3507

Symbol and Footprint
via Ultra Librarian
2604-3507

1 Compatible Products

1.1 Optional Accessories

1.1.1 Ferrule

1.1.1.1 Ferrule

Item No.: 216-241
Ferrule; Sleeve for 0.5 mm² / 20 AWG; insulated; electro-tin plated; electrolytic copper; gastight crimped; acc. to DIN 46228, Part 4/09.90; white



Item No.: 216-242
Ferrule; Sleeve for 0.75 mm² / 18 AWG; insulated; electro-tin plated; electrolytic copper; gastight crimped; acc. to DIN 46228, Part 4/09.90; gray

Item No.: 216-243
Ferrule; Sleeve for 1 mm² / AWG 18; insulated; electro-tin plated; electrolytic copper; gastight crimped; acc. to DIN 46228, Part 4/09.90; red



Item No.: 216-244
Ferrule; Sleeve for 1.5 mm² / AWG 16; insulated; electro-tin plated; electrolytic copper; gastight crimped; acc. to DIN 46228, Part 4/09.90; black



Item No.: 216-246
Ferrule; Sleeve for 2.5 mm² / AWG 14; insulated; electro-tin plated; electrolytic copper; gastight crimped; acc. to DIN 46228, Part 4/09.90; blue



Item No.: 216-106
Ferrule; Sleeve for 2.5 mm² / AWG 14; uninsulated; electro-tin plated; silver-colored

Installation Notes

Conductor termination



Insert fine-stranded conductors – and remove all conductors – via operating tool.

Continued on next page

Conductor termination



Insert solid conductors via push-in termination.