Data Sheet | Item Number: 253-102/000-012

2-conductor PCB terminal block; 1.5 mm²; Pin spacing 5 mm; 2-pole; PUSH WIRE®; orange

https://www.wago.com/253-102/000-012

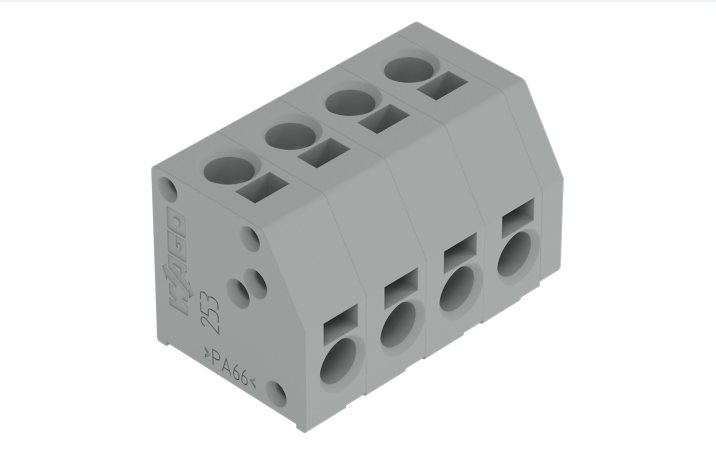

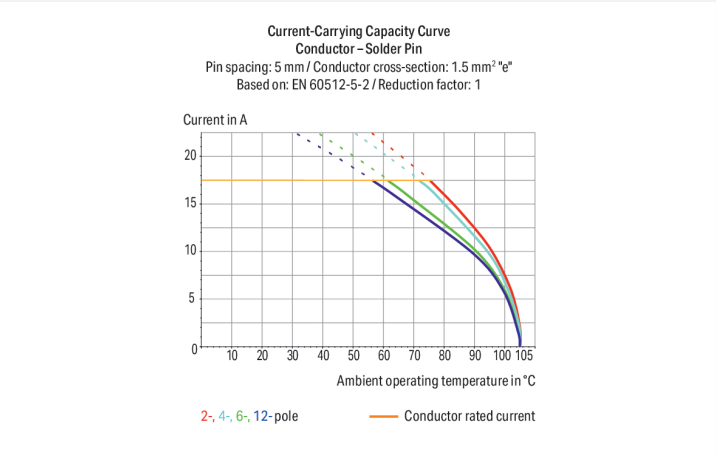

Color: orange

Similar to illustration

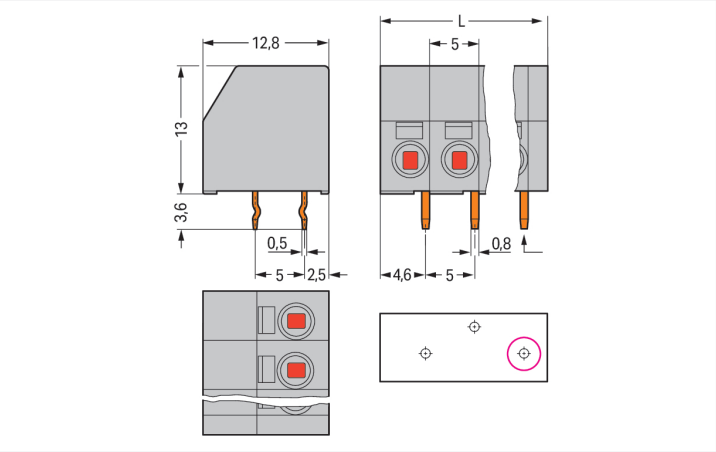

Dimensions in mm
L = (pole no. x pin spacing) + 2 mmFirst solder pin, front right (red circle)

PCB terminal block, 253 Series, orange

This PCB terminal block (item number 253-102/000-012) is designed for quick and easy connections. It is perfect for custom installations with different mounting types. Strip lengths must be between 8.5 and 9.5 mm when connecting conductors to this PCB terminal block. Featuring two conductor terminals along with PUSH WIRE® as well as PUSH WIRE®, this product delivers reliable performance. Our PUSH WIRE® connection uses the stiffness of the conductor to overcome the clamping spring's contact force, allowing faster and easier conductor clamping. Dimensions: (12 x 16.6 x 12.8) mm (width x height x depth). This PCB terminal block is suitable for conductor cross sections ranging from 0.5 mm² to 1.5 mm² on one side and for conductor cross sections ranging from 0.5 mm² to 1.5 mm² on the other side.

Tin is used for coating the contact surfaces. An operating tool is used to operate this PCB terminal block. THT is used to solder the PCB terminal block. Insert the conductor into the board at a 0° angle..

 Continued on next page

Notes

Variants:	Other pole numbers Other colors Mixed-color PCB connector strips Direct marking Other versions (or variants) can be requested from WAGO Sales or configured at https://configurator.wago.com/.

Electrical data

Ratings per	IEC/EN 60664-1		
Overvoltage category	III	III	II
Pollution degree	3	2	2
Nominal voltage	320 V	160 V	320 V
Rated impulse withstand voltage	4 kV	2.5 kV	2.5 kV
Rated current	17.5 A	17.5 A	17.5 A

Approvals per	UL 1059		
Use group	B	C	D
Rated voltage	300 V	-	300 V
Rated current	8 A	-	5 A

Approvals per	CSA		
Use group	B	C	D
Rated voltage	300 V	-	300 V
Rated current	8 A	-	5 A

Connection Data

Clamping units	4
Total number of potentials	2
Number of connection types	2
Number of levels	1

Connection 1

Connection type	PUSH WIRE® connection
Connection technology	PUSH WIRE®
Number of connection points	1
Actuation type	Operating tool
Solid conductor	0.5 … 1.5 mm² / 20 … 16 AWG
Strip length	8.5 … 9.5 mm / 0.33 … 0.37 inches
Note (strip length)	7 … 8 mm / 0.28 … 0.31 inch (for wiring on both sides)
Conductor connection direction to PCB	0 °
Pole number	2

Connection 2

Connection type	PUSH WIRE® connection
Connection technology	PUSH WIRE®
Number of connection points	1
Solid conductor	0.5 … 1.5 mm² / 20 … 16 AWG
Strip length	8.5 … 9.5 mm / 0.33 … 0.37 inches
Note (strip length)	7 … 8 mm / 0.28 … 0.31 inch (for wiring on both sides)
Conductor connection direction to PCB	90 °

 Continued on next page

Physical data

Pin spacing	5 mm / 0.197 inches
Width	12 mm / 0.472 inches
Height	16.6 mm / 0.654 inches
Height from the surface	13 mm / 0.512 inches
Depth	12.8 mm / 0.504 inches
Solder pin length	3.6 mm
Solder pin dimensions	0.5 x 0.8 mm
Drilled hole diameter	1.1 $^{(+0.1)}$ mm

PCB contact

PCB contact	THT
Solder pin arrangement	over the entire terminal strip (staggered)
Number of solder pins per potential	1

Material data

Note (material data)	Information on material specifications can be found here
Color	orange
Material group	I
Insulation material (main housing)	Polyamide (PA66)
Flammability class per UL94	V0
Clamping spring material	Chrome-nickel spring steel (CrNi)
Contact material	Electrolytic copper (E_{Cu})
Contact Plating	Tin
Fire load	0.038 MJ
Weight	2 g

Environmental requirements

Limit temperature range	-60 … +105 °C

Commercial data

Product Group	4 (Printed Circuit Connectors)
PU (SPU)	400 (100) pcs
Packaging type	Box
Country of origin	CN
GTIN	4044918689182
Customs tariff number	85369010000

Product Classification

UNSPSC	39121409
eCl@ss 10.0	27-44-04-01
eCl@ss 9.0	27-44-04-01
ETIM 9.0	EC002643
ETIM 10.0	EC002643
ECCN	NO US CLASSIFICATION

 Continued on next page

Environmental Product Compliance

RoHS Compliance Status	Compliant,No Exemption

Approvals / Certificates

General approvals

Approval	Standard	Certificate Name
cURus Underwriters Laboratories Inc.	UL 1059	E45172
UL UL International Germany GmbH	UL 1977	E45171

Downloads

Environmental Product Compliance

Compliance Search

Environmental Product Compliance
253-102/000-012

Documentation

Additional Information

Technical Section	03.04.2019	pdf 2027.26 KB	

CAD/CAE-Data

CAD data

2D/3D Models
253-102/000-012

CAE data

EPLAN Data Portal
253-102/000-012

ZUKEN Portal
253-102/000-012

PCB Design

Symbol and Footprint via SamacSys
253-102/000-012

Symbol and Footprint via Ultra Librarian
253-102/000-012

 Continued on next page

1 Compatible Products

1.1 Optional Accessories

1.1.1 Marking

1.1.1.1 Marking strip

Item No.: 210-833
Marking strips; 25 m on roll; 6 mm wide; plain; Self-adhesive; white

Item No.: 210-332/500-202
Marking strips; as a DIN A4 sheet; MARKED; 1-16 (160x); Height of marker strip: 3 mm; Strip length 182 mm; Horizontal marking; Self-adhesive; white

Item No.: 210-332/500-205
Marking strips; as a DIN A4 sheet; MARKED; 1-32 (80x); Height of marker strip: 3 mm; Strip length 182 mm; Horizontal marking; Self-adhesive; white

Item No.: 210-332/500-204
Marking strips; as a DIN A4 sheet; MARKED; 17-32 (160x); Height of marker strip: 3 mm; Strip length 182 mm; Horizontal marking; Self-adhesive; white

Item No.: 210-332/500-206
Marking strips; as a DIN A4 sheet; MARKED; 33-48 (160x); Height of marker strip: 3 mm; Strip length 182 mm; Horizontal marking; Self-adhesive; white

1.1.2 Tool

1.1.2.1 Operating tool

Item No.: 210-719
Operating tool; Blade: 2.5 x 0.4 mm; with a partially insulated shaft

Item No.: 210-648
Operating tool; Blade: 2.5 x 0.4 mm; with a partially insulated shaft; angled; short

Item No.: 210-647
Operating tool; Blade: 2.5 x 0.4 mm; with a partially insulated shaft; multicoloured

Installation Notes

Conductor termination

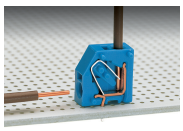

Inserting a conductor via push-in termination.

Conductor removal

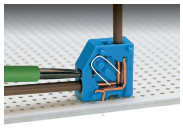

Removing a conductor via 2.5 mm screwdriver.

 Continued on next page

Installation

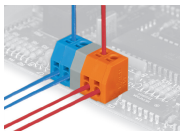

Mixed-color terminal strips (with or without spacer) are available upon request.