RJ45C5 T1D 3.2N4N RL SO

Weidmüller Interface GmbH & Co. KG
Klingenbergstraße 26
D-32758 Detmold
Germany

www.weidmueller.com

The product range encompasses the following designs:
• 90°, lying (horizontal) and 180°, standing (vertical)
• latch up / latch down
• THT, THR or SMD soldering processes
• Wide range of different design types, also with integrated LEDs and shield contact tabs
• Performance category Cat. 3 to Cat. 6
• Packed either in a tray (TY) or on a roll (tape-on-reel, RL)
• Compatible with modular RJ45 connector according to ANSI / TIA-1096-A and IEC 60603
• Dielectric strength ≥1500 V AC RMS (2250 V AC peak value) according to IEEE 802.3
• Dielectric strength ≥1500 V AC (peak value) or ≥1500 V DC according to IEC 60603

Properties and advantages:
• Extended temperature range of –40°C to +85°C for maximum performance
• Reinforced gold layer (30µ") for improved corrosion protection
• At least 0.3mm stand-off ensures a perfect soldering result

General ordering data

Version	PCB plug-in connector, RJ45 jacks, Cat. 5 , THT solder connection, 90°, Latch option: bottom, Shield tabs: none, 30...80 µ" Ni / ≥ 30 µ" Au , LED: No, Number of poles: 8, Tape
Order No.	2439040000
Type	RJ45C5 T1D 3.2N4N RL SO
GTIN (EAN)	4050118451573
Qty.	260 pc(s).
Packaging	Tape

RJ45C5 T1D 3.2N4N RL SO

Weidmüller Interface GmbH & Co. KG
Klingenbergstraße 26
D-32758 Detmold
Germany

www.weidmueller.com

Technical data

Dimensions and weights

Depth	20.54 mm	Depth (inches)	0.809 inch
Height	16.1 mm	Height (inches)	0.634 inch
Height of lowest version	12.9 mm	Width	15.2 mm
Width (inches)	0.598 inch	Net weight	3.312 g

System specifications

Category	Cat. 5	LED	No
Latch option	bottom	Mounting onto the PCB	THT solder connection
Number of poles	8	Number of solder pins per pole	1
Outgoing elbow	90°	Performance-Category	Cat. 5
Pitch in inches (P)	0.05 inch	Pitch in mm (P)	1.27 mm
Plugging cycles	750	Product family	OMNIMATE Data - RJ45 modular jack
Protection degree	IP20	Shield surface	nickel-plated
Shield tabs	none	Shielding	Yes
Shielding material	Brass	Solder eyelet hole diameter (D)	0.9 mm
Solder eyelet hole diameter tolerance (D)	± 0.1 mm	Solder pin length (l)	3.2 mm
Soldering process	Manual soldering, Wave soldering	Type of connection	Solder connection

Electrical properties

Dielectric strength, contact / contact	1000 V DC	Dielectric strength, contact / shield	1500 V DC
Insulation strength	≥ 500 MΩ	PoE / PoE+	conforming to IEEE 802.3at
Rated current	1.5 A	Rated voltage	125 V

Standards

Connector standard	IEC 60603-7-51

Material data

Insulating material	PA 66	Colour	black
Colour chart (similar)	RAL 9011	Insulating material group	II
Comparative Tracking Index (CTI)	≥ 500	Insulation strength	≥ 500 MΩ
UL 94 flammability rating	V-0	Contact base material	Phosphorus bronze
Contact surface	Gold over nickel	Layer structure of plug contact	30...80 µ" Ni / ≥ 30 µ" Au
Storage temperature, min.	-40 °C	Storage temperature, max.	85 °C
Operating temperature, min.	-40 °C	Operating temperature, max.	85 °C

Packing

Packaging	Tape	VPE length	329 mm
VPE width	329 mm	VPE height	60 mm
Tape reel diameter ∅ (A)	330 mm	Surface resistance	Rs = 10^9 - 10^{12} Ω

Classifications

ETIM 6.0	EC002637	ETIM 7.0	EC002637
ETIM 8.0	EC002637	ETIM 9.0	EC002637
ECLASS 9.0	27-44-04-02	ECLASS 9.1	27-44-04-02
ECLASS 10.0	27-44-04-02	ECLASS 11.0	27-46-02-01
ECLASS 12.0	27-46-02-01	ECLASS 13.0	27460201

RJ45C5 T1D 3.2N4N RL SO

Weidmüller Interface GmbH & Co. KG
Klingenbergstraße 26
D-32758 Detmold
Germany

www.weidmueller.com

Technical data

Approvals

Approvals	
ROHS	Conform
UL File Number Search	UL Website
Certificate No. (cURus)	E471884

Downloads

Approval/Certificate/Document of Conformity	Certificate of Compliance
User Documentation	MAN IE GUIDE DE MAN IE GUIDE EN
Catalogues	Catalogues in PDF-format

RJ45C5 T1D 3.2N4N RL SO

Weidmüller Interface GmbH & Co. KG
Klingenbergstraße 26
D-32758 Detmold
Germany

www.weidmueller.com

Drawings

Dimensional drawing

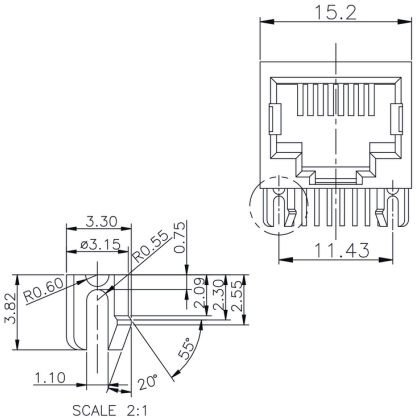

Dimensioned drawing

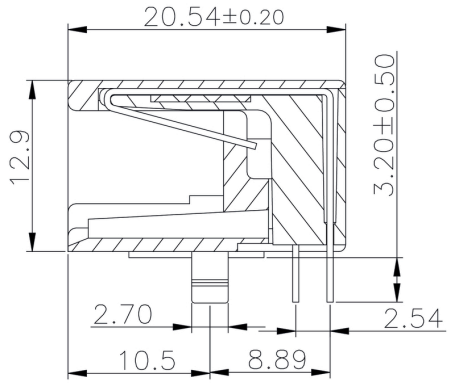

Dimensional drawing

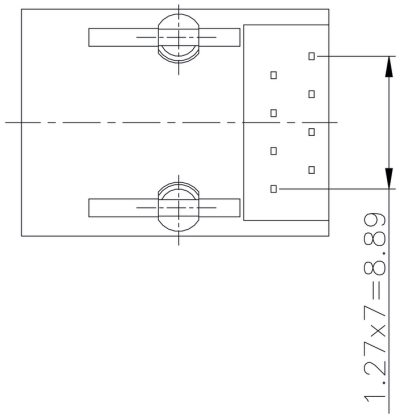

PCB design

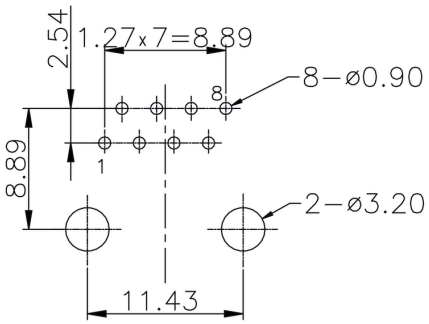

PCB Layout

RJ45C5 T1D 3.2N4N RL SO

Weidmüller Interface GmbH & Co. KG
Klingenbergstraße 26
D-32758 Detmold
Germany

www.weidmueller.com

Drawings

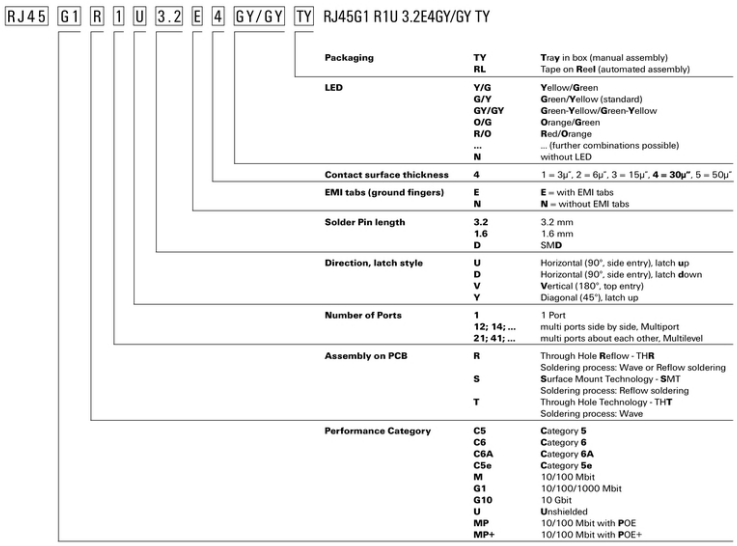

Legend

Creation date December 4, 2023 11:19:09 AM CET

Recommended wave solderding profiles

Weidmüller Interface GmbH & Co. KG
Klingenbergstraße 16
D-32758 Detmold
Germany
Fon: +49 5231 14-0
Fax: +49 5231 14-292083
www.weidmueller.com

Single Wave:

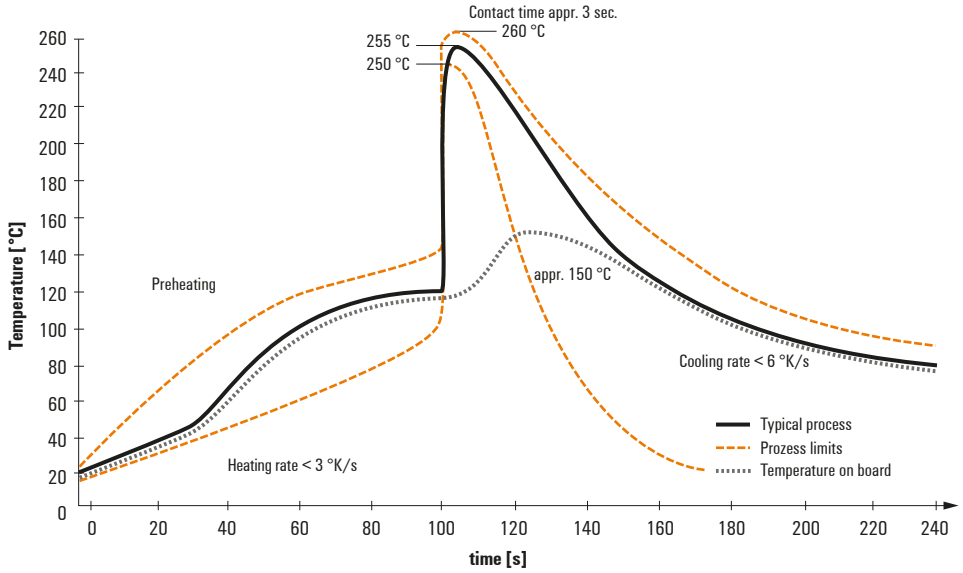

Double Wave:

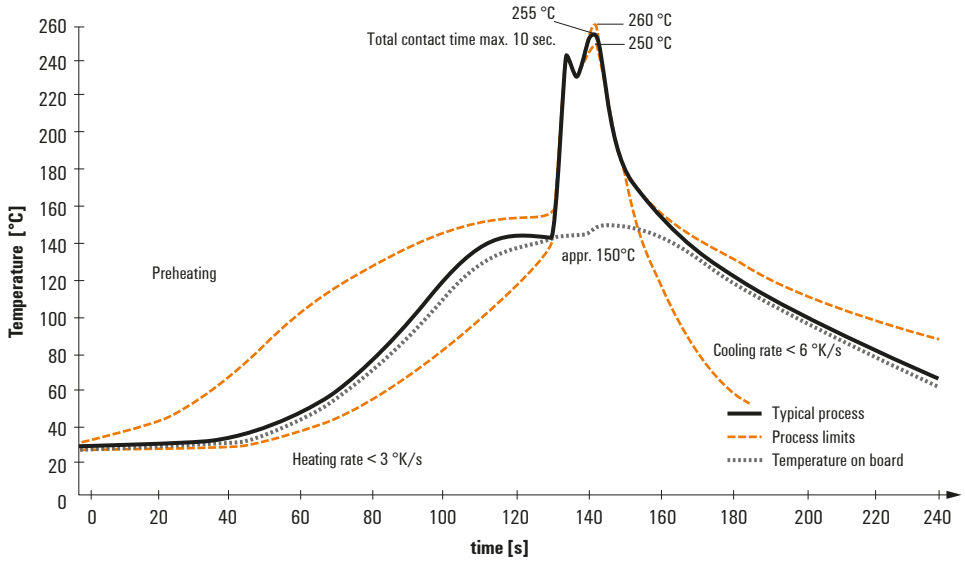

Wave soldering profiles

Wired connection elements should be processed in accordance with the DIN EN 61760-1 standard. We have included two recommendations for practical wave soldering profiles, with which Weidmüller PCB terminals and connectors are qualified.

When choosing a suitable profile for your application, the following factors also need to be considered:
- PCB thickness
- Proportion of Cu in the layers
- Single/double-sided assembly
- Product range
- Heating and cooling rates

The single and double wave profiles each indicate the recommended operating range, including the maximum soldering temperature of 260°C. In practice, the maximum soldering temperature is quite often well below the above maximum profile.

We reserve the right to make technical changes.