SAIE-M12B-4D-H5.5TL-M16

Weidmüller Interfaces GmbH & Co. KG

Postfach 3030

32760 Detmold

Tel. +49 5231 14-0

Fax. +49 5231 14-2083

info@weidmueller.com

www.weidmueller.com

Similar to illustration



Weidmüller is one of the industry's leading international providers of connectors. An important mainstay in this product family are the circular connectors, which Weidmüller groups under the product name SAI. In the development of SAI products, Weidmüller engineers have always concentrated on achieving rational, cost-effective installation concepts, and – in cooperation with major users – have supplied the markets with well-conceived products which set standards in terms of functionality and quality across the globe. The best examples are the new power distributors with S and T coded M12. These modules are characterised by particularly high currents and voltages. This enables them to also be used, for example, with three-phase motors.

General ordering data

Version	Built-in plugs, M12, M 16, Number of poles: 4, Rear panel mounting
Order No.	2422430000
Type	SAIE-M12B-4D-H5.5TL-M16
GTIN (EAN)	4050118430974
Qty.	10 Stück

SAIE-M12B-4D-H5.5TL-M16

Weidmüller Interfaces GmbH & Co. KG

Postfach 3030

32760 Detmold

Tel. +49 5231 14-0

Fax. +49 5231 14-2083

info@weidmueller.com

www.weidmueller.com

Technische Daten

Dimensions and weights

Net weight	20 g

Environmental Product Compliance

REACH SVHC	Lead 7439-92-1

Technical data of PCB plug-in connector

Coding	D	
Housings	M12 socket	
Mounting height	5.5 mm	
Mounting thread	M16	
Number of poles	4	
Shield connection	No	
Type of mounting	Rear panel mounting	
Rated voltage	250 V	
Rated voltage	250 V	
Rated current	4 A	
Rated current	4 A	
Temperature range	-30...80 °C	
Protection degree	IP67	
Contact surface	Au (Gold)	
Housing main material	CuZn, nickel-plated	
Connection thread	M12	
Tightening torque	M12: 0.8 Nm	
Mounting thread	M16	
Mounting torque	max.	1.2 Nm
Mounting torque range	1.2 Nm	
Insulation strength	100 MΩ	
Pollution severity	3 (2 within the sealed area)	
Plugging cycles	≥ 100	
Contact material	CuZn	
Lock nut material	Nickel-plated CuZn	
Material of the flange-mounted housing	Nickel-plated CuZn	

General Info

Housing main material	CuZn, nickel-plated	Connection thread	M12
Contact material	CuZn	Contact surface	Au (Gold)
Type of mounting	Rear panel mounting	Protection degree	IP67
Plugging cycles	≥ 100		

Material data

Contact material	CuZn	Contact surface	Au (Gold)

System parameters

Insulation strength	100 MΩ	Number of poles	4
Pin series quantity	1	Plugging cycles	≥ 100
Protection degree	IP67		

SAIE-M12B-4D-H5.5TL-M16

Weidmüller Interfaces GmbH & Co. KG

Postfach 3030

32760 Detmold

Tel. +49 5231 14-0

Fax. +49 5231 14-2083

info@weidmueller.com

www.weidmueller.com

Technische Daten

Classifications

ETIM 6.0	EC002638	ETIM 7.0	EC003568
ETIM 8.0	EC003568	ECLASS 9.0	27-44-03-09
ECLASS 9.1	27-44-03-09	ECLASS 10.0	27-44-03-09
ECLASS 11.0	27-44-01-10	ECLASS 12.0	27-44-01-10

Approvals

ROHS	Conform

Downloads

Engineering Data	CAD data – STEP
Catalogues	Catalogues in PDF-format
Brochures	FL FIELDWIRING EN

SAIE-M12B-4D-H5.5TL-M16

Weidmüller Interfaces GmbH & Co. KG
Postfach 3030
32760 Detmold
Tel. +49 5231 14-0
Fax. +49 5231 14-2083
info@weidmueller.com

Zeichnungen

Dimensioned drawing

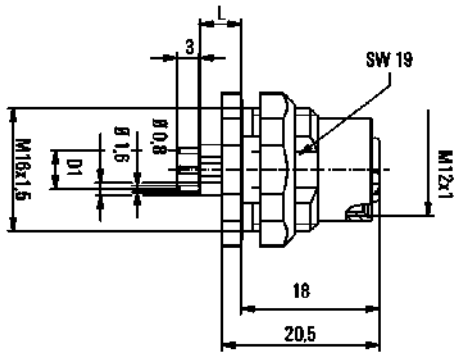

L(board-to-board distance) = 5,5mm
D1 = 5,0 mm

PCB design

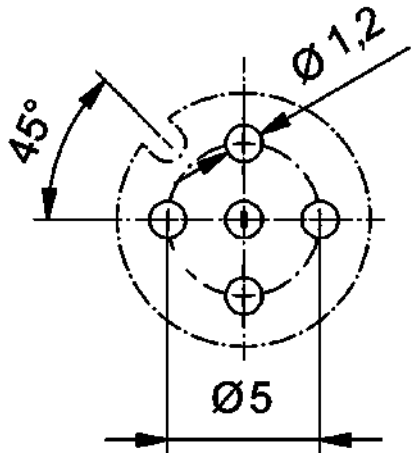

Front panel section

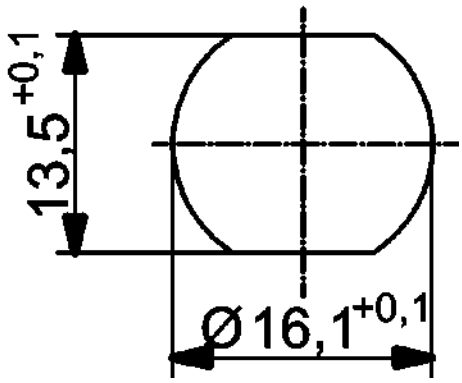

Pole scheme

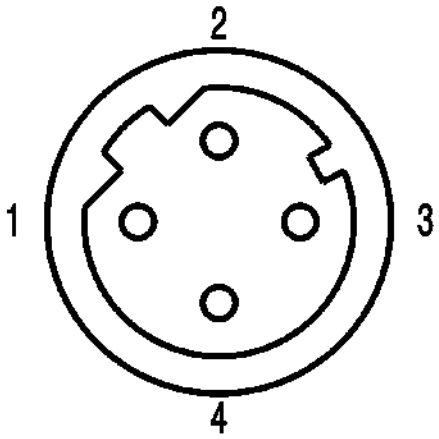

M12 = D-coded