SAIE-M12B-8S-H6.75TL

Weidmüller Interface GmbH & Co. KG
Klingenbergstraße 26
D-32758 Detmold
Germany

www.weidmueller.com



Weidmüller is one of the industry's leading international providers of connectors. An important mainstay in this product family are the circular connectors, which Weidmüller groups under the product name SAI. In the development of SAI products, Weidmüller engineers have always concentrated on achieving rational, cost-effective installation concepts, and – in cooperation with major users – have supplied the markets with well-conceived products which set standards in terms of functionality and quality across the globe. The best examples are the new power distributors with S and T coded M12. These modules are characterised by particularly high currents and voltages. This enables them to also be used, for example, with three-phase motors.

General ordering data

Version	Built-in plugs, M12, Mounting thread: M 16, Number of poles: 8, Strand / cable length:
Order No.	2421940000
Type	SAIE-M12B-8S-H6.75TL
GTIN (EAN)	4050118430660
Qty.	10 pc(s).

Creation date December 4, 2023 1:28:01 PM CET

SAIE-M12B-8S-H6.75TL

Weidmüller Interface GmbH & Co. KG
Klingenbergstraße 26
D-32758 Detmold
Germany

www.weidmueller.com

Technical data

Dimensions and weights

Net weight	20 g

Technical data of PCB plug-in connector

Coding	A-coded	
Housing surface	nickel-plated	
Housings	M12 socket	
Mounting height	6.75 mm	
Mounting thread	M16	
Number of poles	8	
Shield connection	Yes	
Type of mounting	Rear panel mounting	
Rated voltage	30 V	
Rated voltage	250 V (4-pole) / 60 V (5-pole) / 30 V (8-pole)	
Rated current	2 A	
Rated current	4 A (5-pole)/ 2 A (8-pole)	
Temperature range	-30…80 °C	
Protection degree	IP67	
Contact surface	Au (Gold)	
Housing main material	CuZn, nickel-plated	
Connection thread	M12	
Tightening torque	M12: 0.8 Nm	
Mounting thread	M 16	
Mounting torque	max.	1.2 Nm
Mounting torque range	1.2 Nm	
Mounting onto the PCB	THT solder connection	
Insulation strength	100 MΩ	
Pollution severity	3 (2 within the sealed area)	
Plugging cycles	≥ 100	
Contact material	CuZn	
Lock nut material	Nickel-plated CuZn	
Material of the flange-mounted housing	Nickel-plated CuZn	

General Info

Number of poles	8	Housing main material	CuZn, nickel-plated
Connection thread	M12	Contact material	CuZn
Contact surface	Au (Gold)	Type of mounting	Rear panel mounting
Protection degree	IP67	Plugging cycles	≥ 100

Material data

Contact material	CuZn	Contact surface	Au (Gold)

System parameters

Mounting onto the PCB	THT solder connection	Insulation strength	100 MΩ
Number of poles	8	Pin series quantity	1
Plugging cycles	≥ 100	Protection degree	IP67

SAIE-M12B-8S-H6.75TL

Weidmüller Interface GmbH & Co. KG
Klingenbergstraße 26
D-32758 Detmold
Germany

www.weidmueller.com

Technical data

Classifications

ETIM 6.0	EC002638	ETIM 7.0	EC003568
ETIM 8.0	EC003568	ETIM 9.0	EC003568
ECLASS 9.0	27-44-03-09	ECLASS 9.1	27-44-03-09
ECLASS 10.0	27-44-03-09	ECLASS 11.0	27-44-01-10
ECLASS 12.0	27-44-01-10	ECLASS 13.0	27440110

Environmental Product Compliance

REACH SVHC	Lead 7439-92-1
SCIP	0ea6d931-f9e9-40a6-89d9-8d67103189d3

Approvals

ROHS	Conform

Downloads

Engineering Data	CAD data – STEP
Catalogues	Catalogues in PDF-format
Brochures	FL FIELDWIRING EN

SAIE-M12B-8S-H6.75TL

Weidmüller Interface GmbH & Co. KG
Klingenbergstraße 26
D-32758 Detmold
Germany

www.weidmueller.com

Drawings

Dimensioned drawing

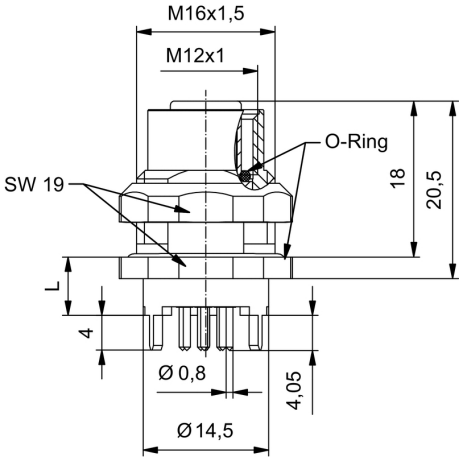

PCB design

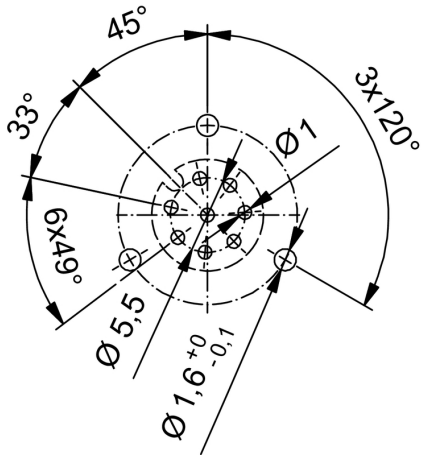

Pole scheme

