2402888-1 ✔ ACTIVE

NanoRF Optical

TE Internal #: 2402888-1

6 Coaxial Contacts, Edge, Aluminum, Cable-to-Cable, 6 Position, 3.94 mm [.155 in] Centerline, Printed Circuit Board, NanoRF Optical, PCB RF Modules

View on TE.com >

Connectors > RF Connectors > RF Modules > PCB RF Modules

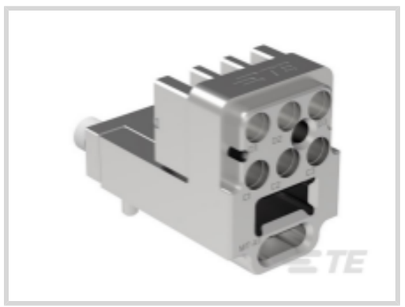

Number of Coaxial Contacts: **6**

PCB Mount Orientation: **Edge**

Body Material: **Aluminum**

Connector System: **Cable-to-Cable**

Number of Positions: **6**

Features

Product Type Features

Connector System	Cable-to-Cable
Connector & Contact Terminates To	Printed Circuit Board

Configuration Features

Number of Coaxial Contacts	6
PCB Mount Orientation	Edge
Number of Positions	6

Body Features

Body Material	Aluminum

Housing Features

Centerline (Pitch)	3.94 mm[.155 in]

Product Compliance

For compliance documentation, visit the product page on TE.com>

EU RoHS Directive 2011/65/EU	Compliant
EU ELV Directive 2000/53/EC	Compliant
China RoHS 2 Directive MIIT Order No 32, 2016	有害物质含量符合标准要求 No Restricted Substance(s) Above Threshold

EU REACH Regulation (EC) No. 1907/2006	Current ECHA Candidate List: JUNE 2025 (250) Not Yet Reviewed
Halogen Content	Low Halogen - Br, Cl, F < 900 ppm per homogenous material. Also BFR/CFR/PVC Free
Solder Process Capability	Not reviewed for solder process capability

Product Compliance Disclaimer

This information is provided based on reasonable inquiry of our suppliers and represents our current actual knowledge based on the information they provided. This information is subject to change. The part numbers that TE has identified as EU RoHS compliant have a maximum concentration of 0.1% by weight in homogenous materials for lead, hexavalent chromium, mercury, PBB, PBDE, DBP, BBP, DEHP, DIBP, and 0.01% for cadmium, or qualify for an exemption to these limits as defined in the Annexes of Directive 2011/65/EU (RoHS2). Finished electrical and electronic equipment products will be CE marked as required by Directive 2011/65/EU. Components may not be CE marked. Additionally, the part numbers that TE has identified as EU ELV compliant have a maximum concentration of 0.1% by weight in homogenous materials for lead, hexavalent chromium, and mercury, and 0.01% for cadmium, or qualify for an exemption to these limits as defined in the Annexes of Directive 2000/53/EC (ELV). Regarding the REACH Regulation, the information TE provides on SVHC in articles for this part number is based on the latest European Chemicals Agency (ECHA) 'Guidance on requirements for substances in articles' posted at this URL: https://echa.europa.eu/guidance-documents/guidance-on-reach

Compatible Parts



TE Part # 2401219-1
SOCKET ASSEMBLY, 75 OHM NANORF 086

Also in the Series | NanoRF Optical



PCB RF Modules(7)



RF Contacts(2)

Customers Also Bought



TE Part #354177-E
MSPEED 50 F SMDTHR F6 B AB VV 137 094 *

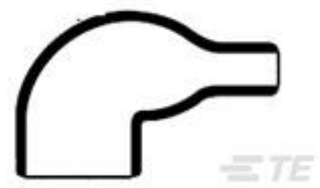

TE Part #901464-000
222A121-25/86-0



TE Part #2102771-1
DC, 7Row, Center, MULTIGIG RT 2R

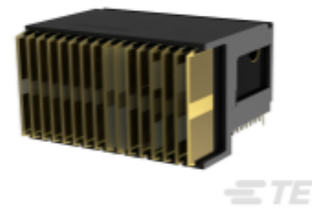

TE Part #2286250-1
MULTIGIG RT 2-R. 7RW

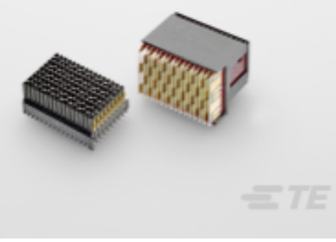

TE Part #2302788-1
VERTRECASSY,LEFTEND, HALF, MGRT3

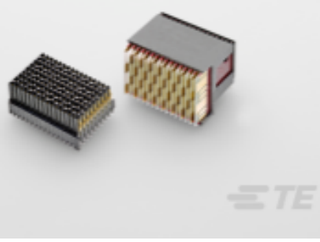

TE Part #2313237-1
RAPLUGASSY,MGRT3,POWER,DP,SE, CENTER

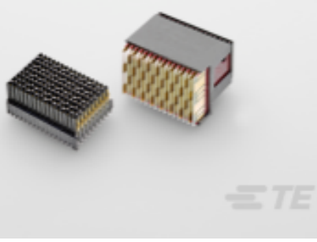

TE Part #2332816-1
RA Plug Assy Left End Multigig RT 3



TE Part #2358897-3
Conn. Assy, FO,MT, rcpt, size 15, 4 ca



TE Part #2828431-1
NanoRF Daughtercard Module 8 POS SS



TE Part #2102523-1
MULTIGIG RT2 SLIM GHW,GUIDE PIN MODULE

Documents

Product Drawings

ASSY, HYBRID 75 OHM NANORF/MT DC MODULE

English

CAD Files

Customer View Model

ENG_CVM_CVM_2402888-1_3.2d_dxf.zip

English

Customer View Model

ENG_CVM_CVM_2402888-1_3.3d_stp.zip

English

Customer View Model

ENG_CVM_CVM_2402888-1_3.3d_igs.zip

English

3D PDF

3D

By downloading the CAD file I accept and agree to the Terms and Conditions of use.

Datasheets & Catalog Pages

NanoRF 75 Ohm Optical Hybrid Module

English