NOTE
All numerical values are in metric units [with U.S. customary units in brackets]. Dimensions are in millimeters [and inches]. Unless otherwise specified, dimensions have a tolerance of ±0.13 [±.005] and angles have a tolerance of ±2°. Figures and illustrations are for identification only and are not drawn to scale.

1. INTRODUCTION

This specification covers the application of the Iccon connector system. This connector system is designed to provide a reliable, high current interconnect with quick connect/disconnect function. This connector system can be useful for space-constrained power applications.

The Iccon pins and sockets have multiple processing options. For sockets there is solder mounting for PCB attachment, and there is knurl joint press-fit for bus bar attachment. For pins there is screw mounting for PCB or bus bar attachment, there is solder mount for PCB attachment, and there is knurl joint press-fit for bus bar attachment. Iccon pins are machined components, so other attachment options are readily customizable. Examples of custom Iccon pin attachments include swage fit, bolt down, and double ended posts.

When corresponding with TE Connectivity Personnel, use the terminology provided in this specification to facilitate your inquiries for information. Basic terms and features of this product are provided in Figures 1 - 12.

Iccon Pins and Sockets

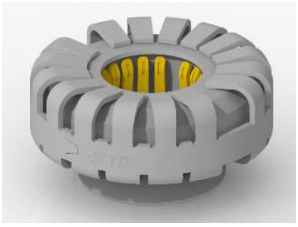
Fig 1: Solder Mount Floating Socket

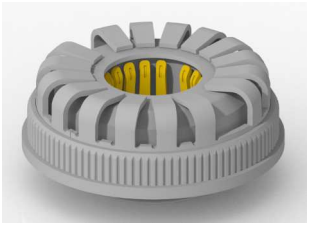
Fig 2: Knurl Joint Floating Socket (Not Yet Tooled)

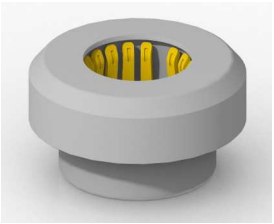
Fig 3: Solder Mount Non-Floating Socket

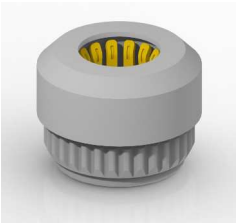
Fig 4: Knurl Joint Non-Floating Socket (Not Yet Tooled)

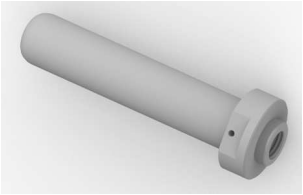
Fig 5: Screw Mount Pin


Fig 6: Knurl Joint Pin


Fig 7: Solder Mount Pin

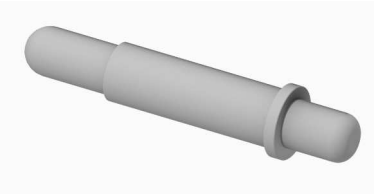
Fig 8: Double Ended Pin


Fig 9: Right Angle Block Press-Fit Socket (Not Yet Tooled)


Fig 10: Vertical Block Press-Fit Socket (Not Yet Tooled)

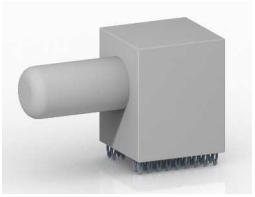
Fig 11: Right Angle Block Press-Fit Pin

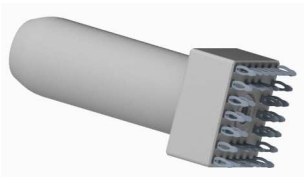
Fig 12: Vertical Block Press-Fit Pin

© 2025 TE Connectivity Ltd. family of companies.
All Rights Reserved.
*Trademark

TE Connectivity, TE connectivity (logo), and TE (logo) are trademarks. Other logos, product, and/or company names may be trademarks of their respective owners.

The Iccon pins and sockets are available in standard diameters of 3.4mm, 6.0mm, 8.0mm, 10.3mm, 11.0mm, and 12.0mm. Reference figures 13 to 24 for examples of the diameter options.

Solder Mount Non-Floating Sockets Shown:

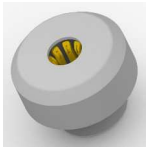
Fig 13: Ø3.4mm Socket

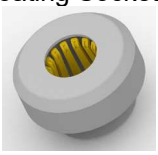
Fig 14: Ø6.0mm Socket

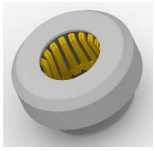
Fig 15: Ø8.0mm Socket

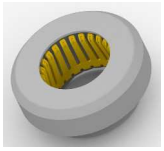
Fig 16: Ø10.3mm Socket

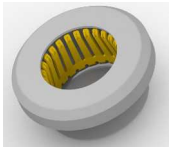
Fig 17: Ø11.0mm Socket

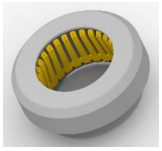
Fig 18: Ø12.0mm Socket

Screw Mount Pins Shown:


Fig 19: Ø3.4mm Pin


Fig 20: Ø6.0mm Pin


Fig 21: Ø8.0mm Pin


Fig 22: Ø10.3mm Pin


Fig 23: Ø11.0mm Pin


Fig 24: Ø12.0mm Pin

2. REFERENCE MATERIAL

2.1. REVISION SUMMARY

Date	Version #	Author	Description
10th July 2020	A	Andy Li	Initial release of application specification.
27th Oct 2025	B	Michael Menkhaus	Remove Iccon Slim products; update floating socket design; update crown band contact design;
18th Nov 2025	C	Michael Menkhaus	Section 4.1: add “the pattern on … socket during reflow.”

2.2. CUSTOMER ASSISTANCE

Standard Iccon pins and socket sizes and options are shown below. All Iccon connectors are classified under product code H885. Use of this number will identify the product line and help to obtain product and tooling information. Such information can be obtained by a local TE Representative, by visiting our website at www.te.com, or by calling the PRODUCT INFORMATION number at the bottom of page 1.

Type	Style	Diameter	TE Base Part Number
Socket	Solder Mount Non-Floating	Ø3.4mm	2364360
Socket	Solder Mount Non-Floating	Ø6.0mm	2493668
Socket	Solder Mount Non-Floating	Ø8.0mm	2361371
Socket	Solder Mount Non-Floating	Ø10.3mm	2498566
Socket	Solder Mount Non-Floating	Ø11.0mm	2499232
Socket	Solder Mount Non-Floating	Ø12.0mm	2498918
Socket	Solder Mount Floating	Ø3.4mm	2388951
Socket	Solder Mount Floating	Ø6.0mm	2492425
Socket	Solder Mount Floating	Ø8.0mm	2396904
Socket	Solder Mount Floating	Ø10.3mm	2459523
Socket	Solder Mount Floating	Ø11.0mm	2456692
Socket	Solder Mount Floating	Ø12.0mm	2495231
Socket	Knurl Joint Non-Floating	Ø3.4mm	2493669
Socket	Knurl Joint Non-Floating	Ø6.0mm	2499574
Socket	Knurl Joint Non-Floating	Ø8.0mm	2499575
Socket	Knurl Joint Non-Floating	Ø10.3mm	2499576
Socket	Knurl Joint Non-Floating	Ø11.0mm	2499577
Socket	Knurl Joint Non-Floating	Ø12.0mm	2499578
Socket	Right Angle Block Press-Fit	Ø3.4mm	2494481
Socket	Right Angle Block Press-Fit	Ø6.0mm	2491413
Socket	Right Angle Block Press-Fit	Ø8.0mm	2491415
Socket	Right Angle Block Press-Fit	Ø10.3mm	2502320
Socket	Right Angle Block Press-Fit	Ø11.0mm	2502321
Socket	Right Angle Block Press-Fit	Ø12.0mm	2502323
Pin	Screw Mount	Ø3.4mm	2454960
Pin	Screw Mount	Ø6.0mm	2367477
Pin	Screw Mount	Ø8.0mm	2361493
Pin	Screw Mount	Ø10.3mm	2378176
Pin	Screw Mount	Ø11.0mm	2456691
Pin	Screw Mount	Ø12.0mm	2506935
Pin	Solder Mount	Ø3.4mm	2500853
Pin	Solder Mount	Ø6.0mm	2501670
Pin	Solder Mount	Ø8.0mm	2501669
Pin	Solder Mount	Ø11.0mm	2514981
Pin	Knurl Joint	Ø6.0mm	2367477
Pin	Vertical Block Press-Fit	Ø6.0mm	2374528
Pin	Vertical Block Press-Fit	Ø8.0mm	2372674
Pin	Vertical Block Press-Fit	Ø10.3mm	2358714
Pin	Vertical Block Press-Fit	Ø12.0mm	2406302
Pin	Right Angle Block Press-Fit	Ø6.0mm	2493731
Pin	Right Angle Block Press-Fit	Ø8.0mm	2521302
Pin	Right Angle Block Press-Fit	Ø10.3mm	2508236
*Additional sizes and options are available. This table acts as a starting point for the offering.			

2.3. DRAWING

Customer drawings for product part numbers are available from the service network. If there is a conflict between the information contained in the customer drawing and this specification or with any other technical documentation supplied, the information contained in the customer drawing takes priority.

3. REQUIREMENTS

3.1. Printed Circuit Board – Iccon Pins and Sockets Solder Mount and Press-Fit

A. Material and Thickness

The printed circuit board (PCB) material shall be glass epoxy (FR-4 or G-10). The minimum PCB thickness for solder applications is 1.30 mm [.052 in.]. The minimum PCB thickness for screw mount applications is 2.00 mm [.079 in.]. Customer drawings for specifc part numbers may will further specify appropriate board thicknesses.

B. Hole Dimensions and Plating

The information below is general and will be superceded by the footprint information on the customer drawing.

- Solder Mount Floating Sockets: Solder pad on top surface of PCB with through hole.
- Knurl Joint Floating Sockets: Still in design and development.
- Solder Mount Non-Floating Sockets: Plated through hole with large solder pad on top of PCB.
- Knurl Joint Non-Floating Sockets: Still in design and development.
- Screw Mount Pin: Solder pads on both sides of board with plated through hole joining them.
- Knurl Joint Pin: Still in design and development.
- Solder Mount Pin: Plated through hole with large solder pad on top of PCB.
- Press-Fit Block Pins and Sockets: Plated through holes for electrical connection and clearance holes for screw mounts. See Figure 27.

If applicable, holes for the board-locks or mounting hardware may be used with or without plated through holes. The drilled hole size, plating types, plating thickness, and finished hole size must be as stated to provide unrestricted insertion. See Figure 25.

For connectors with press-fit contacts, the printed circuit board holes cannot withstand connector removal more than three times. The radius of any board hole must not increase more than 0.038mm [0.0015in.] or decrease less than 0.0508mm [0.002in.].

C. Pads

The printed circuit board pads must be solderable in accordance with Test Specification 109-11.

D. Layout

The holes in the printed circuit board must be precisely located to ensure proper placement and optimum performance. The printed circuit board layout must be designed using the dimensions provided on the customer drawing for the specific connector. A sample of the recommended printed circuit board layout is shown in Figure 26.

E. Spacing

Care must be used to avoid interference between adjacent connectors and other components.

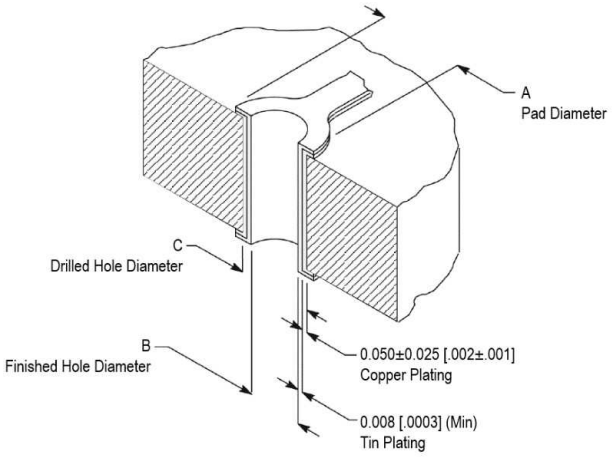

Fig 25: Dimensions A, B, and C can be found on customer drawings. Recommended plating thicknesses and materials are shown.

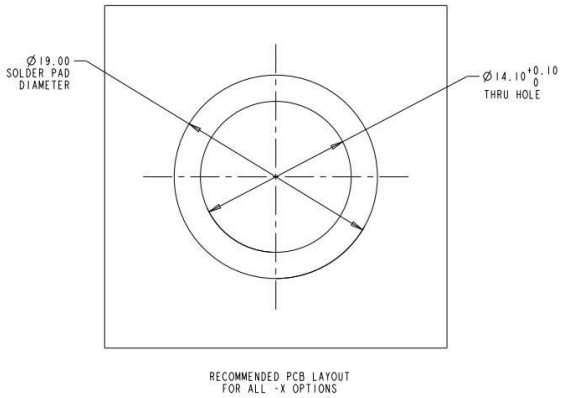

Fig 26: Top view example of a footprint shown on customer drawings.

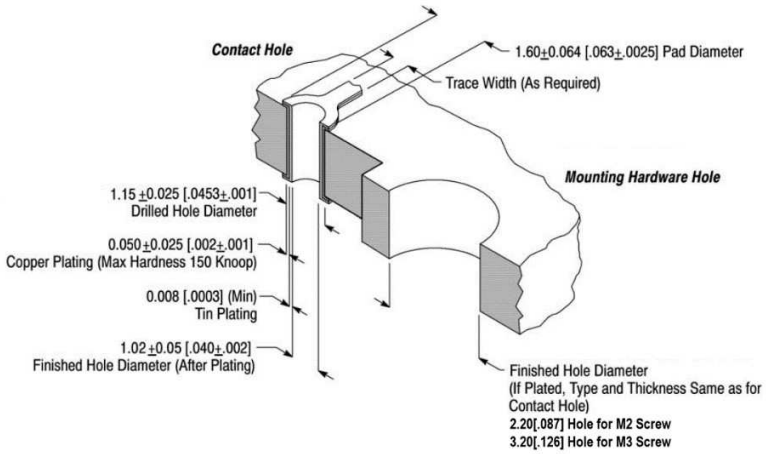

Fig 27: Recommended plated through hole design for block press-fit connectors.

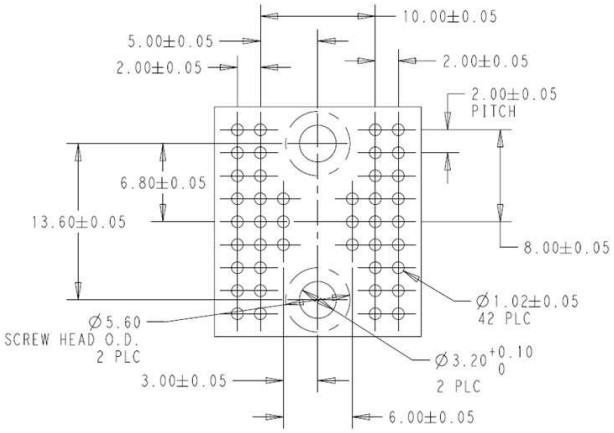

Fig 28: Top view example of a block press-fit connector footprint shown on customer drawings.

3.2. Bus Bar

A. Material and Thickness

For optimum performance, the bus bar must be made of highly conductive copper (101% @ 20°C [68°F] per International Anneal Copper Standards {IACS}), and tin plated 0.00127 mm [.000050 in.] minimum over 0.00127 to 0.00254 mm [.00050 to .00010 in.] nickel plating. The minimum bus bar thickness for press-fit application is 2.0 mm [.079 in].

B. Layout

The holes in the bus bar must be precisely located to ensure proper placement and optimum performance. The bus bar layout must be designed using the dimensions provided on the customer drawing for the specific connector

3.3. Screw Mounting

A. Mounting Hardware

Connectors with mounting holes or threads can be secured to the printed circuit board or bus bar using commercially-available screws. The screw size and recommended torque is provided in Figure 29. The screw sizes are shown on the customer drawings.

SCREW	RECOMMENDED TORQUE Nm
M2	0.4
M2.5	0.4
M3	0.5
M4	1.2
M5	2.0
M6	2.5

Fig 29: Recommended torque values by screw size.

B. Mounting Process

Place the connector onto the printed circuit board or bus bar hole. Then screw the stud with washers, including a spring washer or conical washer, to the recommended torque value for fastening. A sample of the pin mounting process is shown in Figure 30.



Fig 30: Example of screw mounted pin assembly process.

3.4. Connector Placement

CAUTION

Connectors should be handled only by the housing to avoid deformation, contamination, or damage to the contacts

A. Registration

When placing connectors on the printed circuit board, contacts and, if applicable, board-locks or mounting screws must be aligned and started into the matching holes before seating the connector into the printed circuit board.

B. Insertion Force

The maximum insertion force for connector with press-fit tails can be calculated by:

# of connector press-fit tails × maximum insertion force per contact N [lb] = maximum insertion force N [lb]

The maximum amount of insertion force per tail is 111.2N (25lb).

3.5. Connector Mating

A. Misalignment

For Iccon pin and socket mating, misalignment is allowed to the dimensions given in Figures 31 and 32.

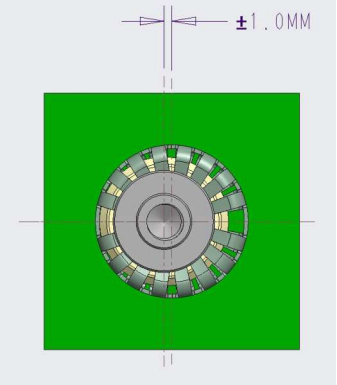

Fig 31: Maximum misalignment allowable for floating sockets.

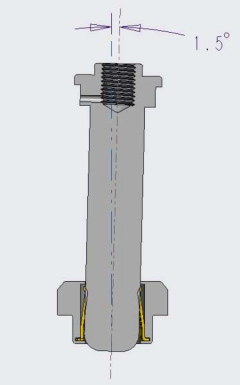

Fig 32: Maximum angle misalignment allowable for Iccon pins and sockets.

B. Wipe Length

Wipe length for these connectors is defined as that portion (length) of the mating contacts that touches (wipes) from the point of engagement to the point of being fully mated. It is recommended for the post to be brought flush with the bottom of the socket housing or protrude from the bottom of the socket housing.

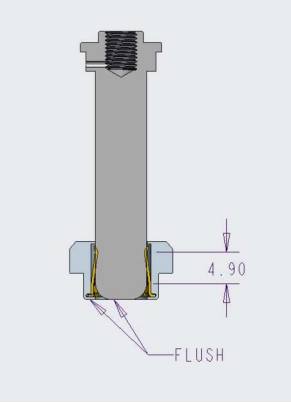

Fig 33: Example of the post length being tailored to fully mate flush with the socket housing.

C. Mating Direction

Non-floating sockets can be mated from the top or bottom of the socket. It is recommended to only mate floating sockets from the top of the socket.

4. TOOLING

4.1. Solder Mounting Connectors

No tooling is required for placement of the solder type connectors onto the printed circuit board. There are product options for pick and place caps if automated placement is preferred. Suggested solder screen dimensions for the floating sockets are shown below for each diameter. Suggested solder screen thickness is 0.127mm [0.005in.]. The pattern on the suggested solder screen is to control solder volume and is not patterned to correlate with the bottom of the floating socket. The pick and place cap should be removed after the soldering process as the pick and pad helps to center the socket during reflow.

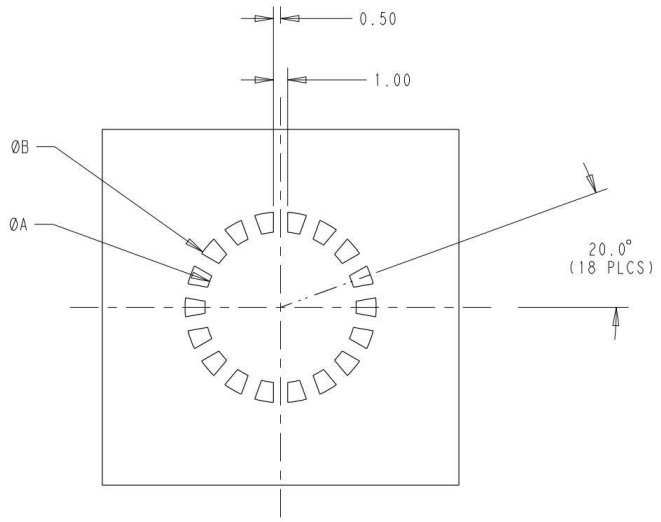

Socket Size	TE Base PN	Dim ØA	Dim ØB
Ø3.4mm	2388951	Ø10.6mm	Ø13.4mm
Ø6.0mm	2492425	Ø13.2mm	Ø16.0mm
Ø8.0mm	2396904	Ø15.2mm	Ø18.0mm
Ø10.3mm	2459523	Ø17.5mm	Ø21.2mm
Ø11.0mm	2456692	Ø18.2mm	Ø21.9mm
Ø12.0mm	2495231	Ø19.2mm	Ø22.0mm

Fig 34: Solder screen layout for solder mount floating kits.

4.2. Screw Mounting Connectors

No tooling is required for placement of screw mounting connectors. It is recommended to use a torque screwdriver to ensure the torques in figure 29 are met.

4.3. Knurl Joint and Press-fit Connectors

A. Application Tooling

The application tooling (such as an arbor press) used to seat these connectors must provide sufficient amount of downward force to insert the contacts into the printed circuit board holes. Reference the customer drawing for knurl joint press-fit forces. Reference 3.4 B for press-fit connector forces.

B. PC Board Support

A printed circuit board support must be used to prevent bowing of the printed circuit board during connector insertion. The board support must have a flat surface with holes or a channels large enough and deep enough to receive any protruding components. The printed circuit board must be secured to the board support to prevent movement of the board during seating.

Printed circuit board supports should also be used when removing these connectors from the printed circuit board. This would apply to rework processes.

C. Flat Rock Tooling

Commercially available bar stock (flat rock tooling) with a flat surface large enough to cover all contacts must be used with the application tooling to seat these connectors.

For removing these connectors from the printed circuit board, it is suggested that the printed circuit board be supported from the connector side and that the connector be removed using flat rock tooling.

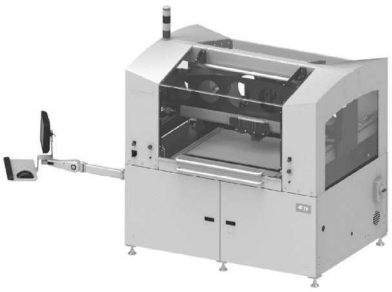

Application Tooling (Arbor Press)

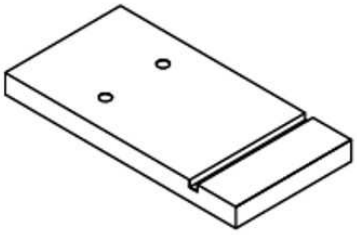

PC Board Support
(Must be Custom Made)

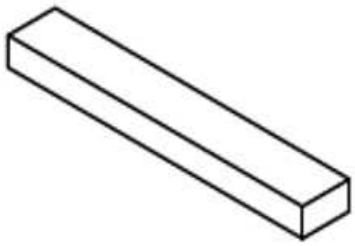

Flat Rock Tooling
(Must be Custom Made)

Fig 35: Knurl joint and press-fit tooling examples.

5. VISUAL AID

The illustration below shows a typical application of this product. This illustration should be used by production personnel to ensure a correctly applied product. Applications which DO NOT appear correct should be inspected using the information in the preceding pages of this specification and in the instructional material shipped with the product or tooling.

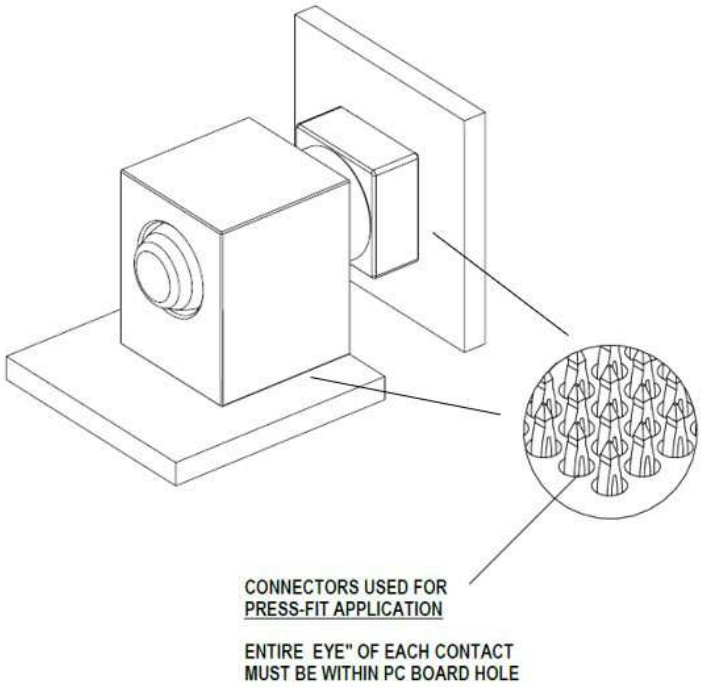

Fig 36: Visual aid for inspecting press-fit pins on block press-fit style connectors.