2323881-4 ✔ ACTIVE

TE Internal #: 2323881-4

Tab Terminal, 1.2 mm [.047 in] Tab Width, Tin (Sn), .6 mm [.024 in] Tab Thickness, Unsealed, Terminates To Printed Circuit Board

View on TE.com >

Automotive Parts > Automotive Terminals



Terminal Type: **Tab**

Mating Tab Width: **1.2 mm [.047 in]**

Interface Plating: **Tin (Sn)**

Primary Locking Feature: **On the Terminal**

Sealable: **No**

Features

Product Type Features

Primary Locking Feature	On the Terminal
Sealable	No

Body Features

Terminal Seal Type	Unsealed

Contact Features

Contact Size	1.2mm
Contact Fabrication	Stamped & Formed
Terminal Type	Tab
Mating Tab Width	1.2 mm[.047 in]
Interface Plating	Tin (Sn)
Mating Tab Thickness	.6 mm[.024 in]

Termination Features

Termination Method to PCB	Through Hole - Press-Fit
Product Terminates To	Printed Circuit Board

Dimensions

PCB Hole Diameter	.97 – 1.07 mm[.038 – .042 in]
Tab Length	16.8 mm[.66 in]

Usage Conditions

Insulation Option	Uninsulated
Operating Temperature (Max)	140 °C[284 °F]
Operating Temperature Range	-40 – 140 °C[-40 – 284 °F]

Packaging Features

Packaging Method	Reel
Packaging Quantity	80000

Product Compliance

For compliance documentation, visit the product page on TE.com>

EU RoHS Directive 2011/65/EU	Compliant
EU ELV Directive 2000/53/EC	Compliant
China RoHS 2 Directive MIIT Order No 32, 2016	有害物质含量符合标准要求 No Restricted Substance(s) Above Threshold
EU REACH Regulation (EC) No. 1907/2006	Current ECHA Candidate List: JUNE 2025 (250) Candidate List Declared Against: JUNE 2025 (250) Does not contain REACH SVHC
Halogen Content	Low Halogen - Br, Cl, F < 900 ppm per homogenous material. Also BFR/CFR/PVC Free
Solder Process Capability	Not reviewed for solder process capability

Product Compliance Disclaimer

This information is provided based on reasonable inquiry of our suppliers and represents our current actual knowledge based on the information they provided. This information is subject to change. The part numbers that TE has identified as EU RoHS compliant have a maximum concentration of 0.1% by weight in homogenous materials for lead, hexavalent chromium, mercury, PBB, PBDE, DBP, BBP, DEHP, DIBP, and 0.01% for cadmium, or qualify for an exemption to these limits as defined in the Annexes of Directive 2011/65/EU (RoHS2). Finished electrical and electronic equipment products will be CE marked as required by Directive 2011/65/EU. Components may not be CE marked. Additionally, the part numbers that TE has identified as EU ELV compliant have a maximum concentration of 0.1% by weight in homogenous materials for lead, hexavalent chromium, and mercury, and 0.01% for cadmium, or qualify for an exemption to these limits as defined in the Annexes of Directive 2000/53/EC (ELV). Regarding the REACH Regulation, the information TE provides on SVHC in articles for this part number is based on the latest European Chemicals Agency (ECHA) 'Guidance on requirements for substances in articles' posted at this URL: https://echa.europa.eu/guidance-documents/guidance-on-reach

Compatible Parts



TE Part # 1670144-2
MCON 1.2 CB REC SRC AU

Customers Also Bought

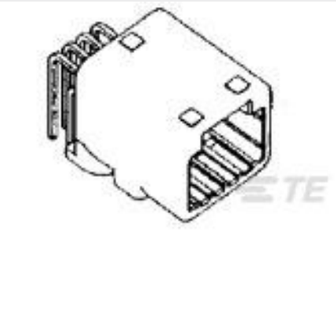

TE Part #1-1376350-4
025 8 pos Cap Assy H



TE Part #1-2322613-1
12POS,TAB0.63X0.63,HDR ASSY, 180DEG,SLDR

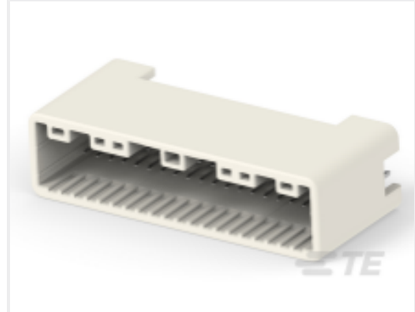

TE Part #2322794-1
40POS,TAB0.64X0.64,HDR ASSY, 180DEG,SLDR



TE Part #2323854-4
TAB0.63X0.63,MS



TE Part #2408630-2
TAB6.0X0.8,MS



TE Part #2413491-2
TAB2.8X0.8,MS



TE Part #2-2437439-7
MQS,TERMINAL,STIFTE MAGAZ

TE Part #1372437-6
TOOTHED BELT HTD-5 325-5M



TE Part #2301335-2
94POS,HYBRID,HDR ASSY,90DEG



TE Part #2322651-1
4POS,0.50 HSL,HDR ASSY,180DEG, COD A

Documents

CAD Files

Customer View Model
ENG_CVM_CVM_2323881-4_A.3d_igs.zip
English

Customer View Model
ENG_CVM_CVM_2323881-4_A.3d_stp.zip
English

Customer View Model
ENG_CVM_CVM_2323881-4_A.2d_dxf.zip

English

3D PDF

3D

By downloading the CAD file I accept and agree to the Terms and Conditions of use.

Product Specifications

Product Specification

English