2311621-2 ✔ ACTIVE

TE Internal #: 2311621-2

Horizontal, Wire-to-Board, 8 Position, 2 Row, 2.5mm [.098in] Centerline, Tin (Sn), Printed Circuit Board, 7.5A Contact Current Rating (Max), Signal

View on TE.com >

Automotive Parts > Automotive Connectors > Automotive Headers

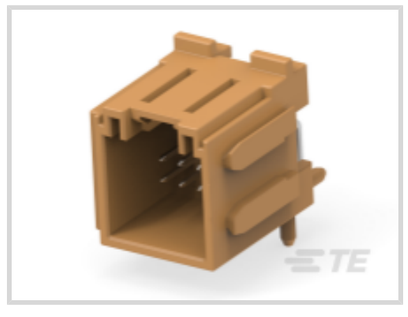
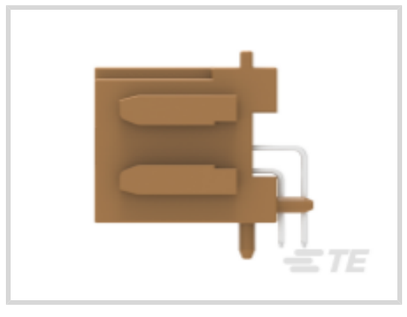

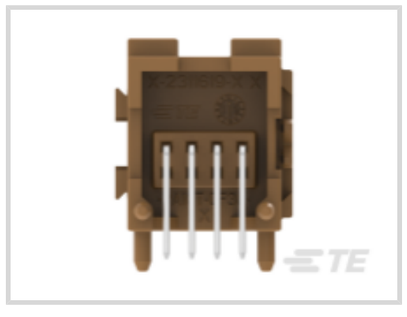
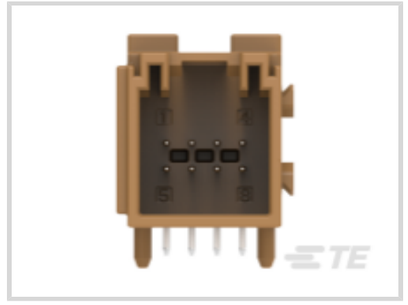

PCB Mount Orientation: **Horizontal**

Contact Current Rating (Max): **7.5 A**

Termination Method to PCB: **Through Hole - Solder**

Sealable: **No**

Centerline (Pitch): **2.5 mm [.098 in]**

Features

Product Type Features

Mixed & Hybrid Header	No
Header Type	Fully Shrouded
Connector Shape	Rectangular
Connector Product Type	Connector Assembly
Sealable	No
Connector System	Wire-to-Board
Connector & Contact Terminates To	Printed Circuit Board

Configuration Features

PCB Mount Orientation	Horizontal
Number of Positions	8
Number of Rows	2

Body Features

Connector & Keying Code	B-C
Primary Product Color	Brown

Contact Features

Mating Tab Thickness	.63 mm[.025 in]
Contact Type	Tab
Mating Tab Width	.63 mm[.025 in]
Contact Current Rating (Max)	7.5 A
Contact Mating Area Plating Material	Tin (Sn)

Termination Features

Termination Method to PCB	Through Hole - Solder

Mechanical Attachment

Mating Alignment	With
PCB Mount Alignment	With
PCB Mount Retention	Without
Connector Mounting Type	Board Mount

Housing Features

Centerline (Pitch)	2.5 mm[.098 in]

Usage Conditions

Operating Temperature (Max)	105 °C[221 °F]
Operating Temperature Range	-40 – 105 °C[-40 – 221 °F]

Operation/Application

Solder Process	Reflow Solder Capable
Circuit Application	Signal

Packaging Features

Packaging Method	Tray
Packaging Quantity	81

Product Compliance

For compliance documentation, visit the product page on TE.com>

EU RoHS Directive 2011/65/EU	Compliant
EU ELV Directive 2000/53/EC	Compliant
China RoHS 2 Directive MIIT Order No 32, 2016	有害物质含量符合标准要求 No Restricted Substance(s) Above Threshold
EU REACH Regulation (EC) No. 1907/2006	Current ECHA Candidate List: JUNE 2025 (250)

	Candidate List Declared Against: JUNE 2025 (250) Does not contain REACH SVHC
Halogen Content	Low Halogen - Br, Cl, F < 900 ppm per homogenous material. Also BFR/CFR/PVC Free
Solder Process Capability	Not reviewed for solder process capability

Product Compliance Disclaimer

This information is provided based on reasonable inquiry of our suppliers and represents our current actual knowledge based on the information they provided. This information is subject to change. The part numbers that TE has identified as EU RoHS compliant have a maximum concentration of 0.1% by weight in homogenous materials for lead, hexavalent chromium, mercury, PBB, PBDE, DBP, BBP, DEHP, DIBP, and 0.01% for cadmium, or qualify for an exemption to these limits as defined in the Annexes of Directive 2011/65/EU (RoHS2). Finished electrical and electronic equipment products will be CE marked as required by Directive 2011/65/EU. Components may not be CE marked.Additionally, the part numbers that TE has identified as EU ELV compliant have a maximum concentration of 0.1% by weight in homogenous materials for lead, hexavalent chromium, and mercury, and 0.01% for cadmium, or qualify for an exemption to these limits as defined in the Annexes of Directive 2000/53/EC (ELV). Regarding the REACH Regulations, TE's information on SVHC in articles for this part number is still based on the European Chemical Agency (ECHA) 'Guidance on requirements for substances in articles'(Version: 2, April 2011), applying the 0.1% weight on weight concentration threshold at the finished product level. TE is aware of the European Court of Justice ruling of September 10th, 2015 also known as O5A (Once An Article Always An Article) stating that, in case of 'complex object', the threshold for a SVHC must be applied to both the product as a whole and simultaneously to each of the articles forming part of its composition. TE has evaluated this ruling based on the new ECHA "Guidance on requirements for substances in articles" (June 2017, version 4.0) and will be updating its statements accordingly.

Compatible Parts

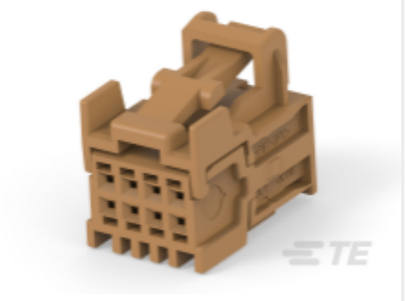

TE Part # 2322346-2
8POS,MQS,REC HSG,UNSLD

Customers Also Bought



TE Part #1-936722-2
FORK REC CONTACT



TE Part #CAT-SIGH262
Signal Header



TE Part #1-1318384-4
025 40POS CAP ASSY H TIN

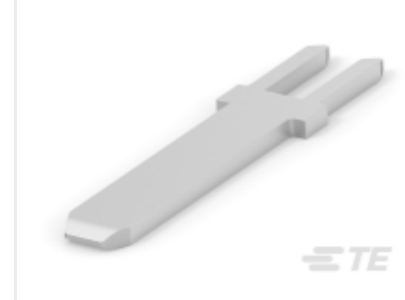

TE Part #2278531-2
MS POWER TERMINAL 2.80 X 0.80



TE Part #1-2333982-1
MATENET,3-PORT,90DEG,HDR,CODA

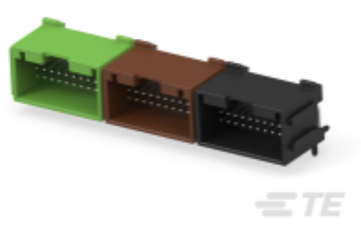

TE Part #2336462-7
60POS,HYBRID,HDR ASSY,90DEG,SLDR



TE Part #2406357-1
28POS,TAB2.8X0.8,HDR ASSY,90DEG,SLDR



TE Part #2-2437439-4
MQS,TERMINAL,STIFTE MAGAZ

Documents

Product Drawings

8POS,TAB0.63X0.63,HDR ASSY,90DEG,SLDR

English

CAD Files

3D PDF

3D

Customer View Model

ENG_CVM_CVM_2311621-2_A.2d_dxf.zip

English

Customer View Model

ENG_CVM_CVM_2311621-2_A.3d_igs.zip

English

Customer View Model

ENG_CVM_CVM_2311621-2_A.3d_stp.zip

English

By downloading the CAD file I accept and agree to the Terms and Conditions of use.

Product Specifications

Application Specification

English