PowerElements

Connectors

PowerElements - CONNECTORS

As stated in its name, PowerElements can be used essentially anywhere where you are dealing with “power” sourcing capabilities, namely high current on the Printed Circuit Board (PCB).

Be it “Wire-to-Board” sourcing and distribution in PCB based high current applications, or assembly, component connection and fixation such as screw locking (e.g. midi or mega fuses), relays with screw connection, conductor rail etc. on the PCBs.

To achieve this we also provide additional insulation bodies e.g. twist protection, to help avoid shorts and contact on the cable side of the connections such as cable lugs.

Also mechanical challenges, such as the PCB connection inside a housing, in the interior or even with a second PCB can be realised using PowerElements.

The two piece PowerElement offers a special feature – it is press fitted from both sides of the PCB. The bearing surface on either side helps provide protection to the PCB against mechanical stress during assembly in the installation space.

Virtually, there are no limits to the variety of PowerElements connection options.

Whether it is the headless screw, the thread nut as well as through holes or blind holes, whether perpendicular or angled, even the installation height, connection surface and thread or drill dimension can be selected and combined with essentially no restriction.

PowerElements in press-fit technology and Surface-Mounted Device (SMD) solder technology are available for processing. SMD PowerElements are delivered blister packed for fully automated assembly.

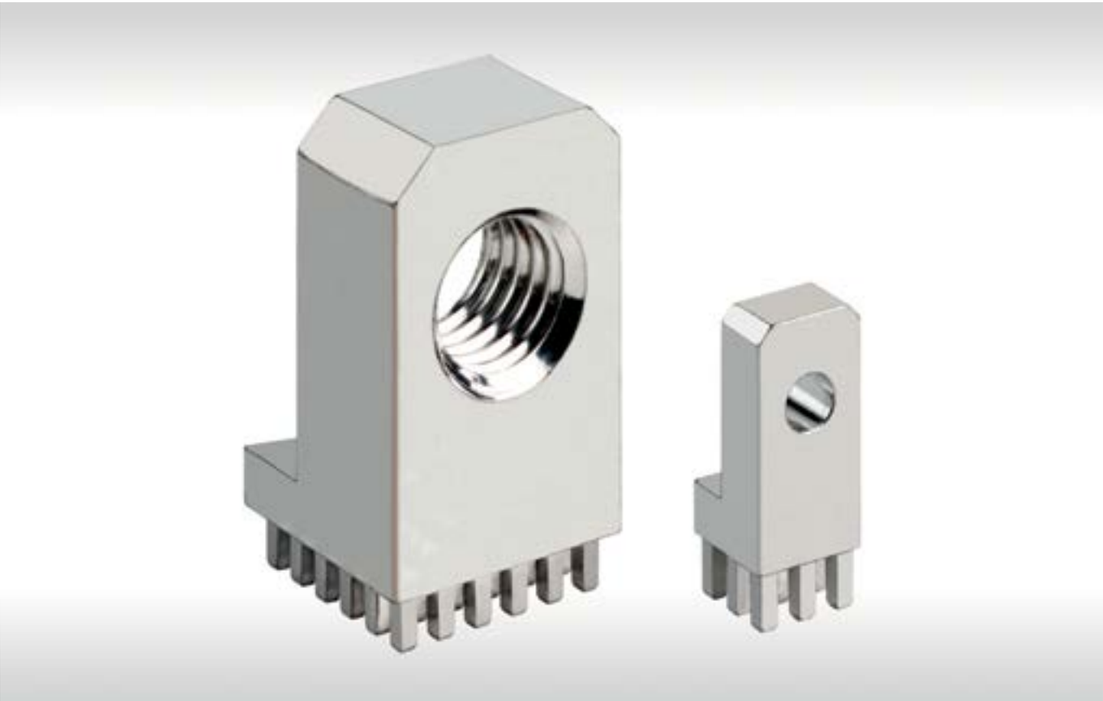

APPLICATION EXAMPLES

Attaching a cable to a M8 male thread PowerElement with twist protection

Attaching a megafuse on two M8 male thread PowerElements

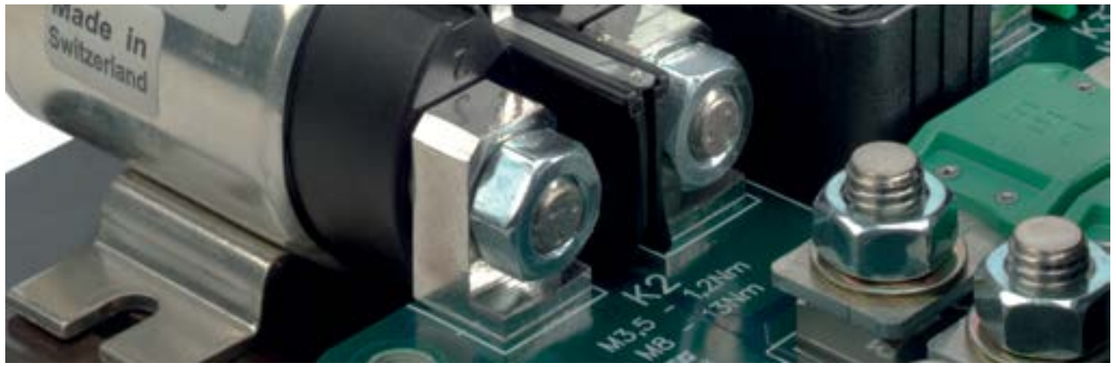

Attaching a high-current relay onto an angled PowerElement

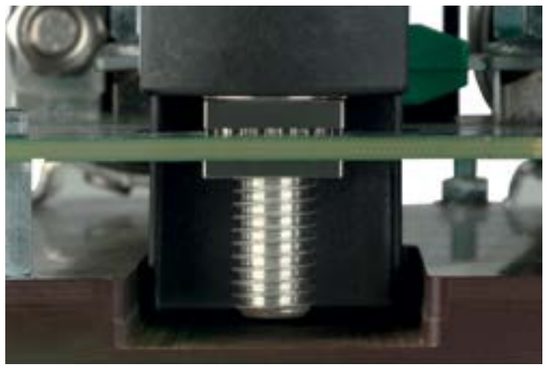

Attaching a battery disconnecting switch on two piece PowerElements

Attaching a midifuse onto two M5 male thread PowerElements

FITTING INSTRUCTIONS

The BLUEcontact PowerElements are REACH conform and with a lead content under 4 percentage by weight, they are also RoHS conform.
The PowerElements can be press fitted from a PCB thickness of 1.6 mm upwards.
Immersion tin and HAL lead free are the most preferable PCB surfaces here.
PowerElements for SMD solder technology should not be stored for longer than 24 months, as the solderability cannot be provided for.

- retention force according to IEC 60352-5
- press fit force: max. 250 N per pin
- temperature range: -40°C to + 135°C

TECHNICAL DATA

Material base body	CuZn39Pb3
Surface	tin plated
Retention force	according to IEC 352-5
Press fit force	max. 250 N per pin min. 40 N per pin
Press out force	min. 30 N per pin
PCB thickness	min. 1.6 mm

CHARACTERISTICS PowerElements WITH MASSIVE PRESSFIT ZONE

General Technical Data

Current carrying capability per PowerElement	approx. 10 A per pin
Tightening torque:	M3: 0.5 Nm M4: 1.2 Nm M5: 2.2 Nm M6: 3.9 Nm M8: 9.0 Nm M10: 17.0 Nm M12: 35.0 Nm
Operating temperature	-40°C to +135°C

Drill Hole Specifications

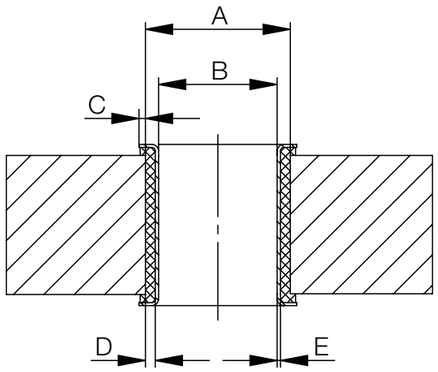

	Surface	A	B	C	D	E
Massive pressfit zone	Immersion tin	ø 1.6 -0.03	ø 1.475 ±0.05	0.1 min.	Cu 25 µm min. Cu 60 µm max.	Sn 15 µm max.
	HAL lead free	ø 1.6 -0.03	ø 1.45 ±0.05	0.1 min.	Cu 25 µm min. Cu 60 µm max.	Sn 15 µm max.

CAUTION:
It is essential that both the drill diameter and final diameter are complied with in order to obtain the specified characteristics.

CHARACTERISTICS PowerElements WITH SMD SOLDER TECHNOLOGY

Product Groups

The PowerElements for SMD-Solder technology are usually categorised into three main groups

- SMD pin (with or without peg)
- SMD socket (with or without peg)
- SMD socket with through-hole thread

SMD PowerElements only available on request

General Technical Data

Current carrying capability per PowerElement	up to 200 A*
Tightening torque	M3: 0.5 Nm M4: 1.2 Nm M5: 2.2 Nm M6: 3.9 Nm M8: 9.0 Nm M10: 17.0 Nm
Operating temperature	-40°C to +155°C
Solder paste thickness	150 µm

* current carrying capability is subject to PCB thickness, cable cross section, the soldering tin used as well as ambient temperature

Layout Specifications

The SMD PowerElements have a round base body that is rotationally symmetrical. The diameter of the SMD Pad should be at least 0.5 mm larger than the diameter of the base body of the selected PowerElement. In the case of elements with a spigot, an additional non-plated through hole with a drilled diameter of 1.2 mm must be placed in the center. In the case of elements with a through hole, additional non-plated through holes must also be placed, depending on the diameter of the base body:

- PowerElement with diameter 7 mm: NPT hole with 5.2 mm
- PowerElement with diameter 9 mm: NPT hole with 6.2 mm
- PowerElement with diameter 13 mm: NPT hole with 9.2 mm
- PowerElement with diameter 16 mm: NPT hole with 12.2 mm

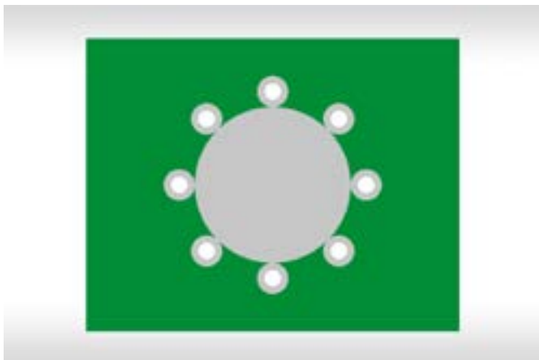

If you have detailed questions about the layout or recommended soldering paste, please contact the ERNI team directly.

OVERVIEW

Product Matrix Pressfit Technology

	Number of pins	6	8	9	10	12	16	20	25	36	49
	Male thread, full pin population			M3, M5			M4, M5		M6, M8		
	Female thread, full pin population			M3			M4, M5, M6		M8	M10	
	Female thread, two rows pin population	M3	M4, M5, M6								
	Female thread, circular pin population					M4, M5	M6				
	Angled, full pin population			M3			M4, M5		M6, M8		
	Angled, two rows pin population	M3	M4, M5		M6, M8						
	Protection for PowerElements with male thread	Suitable for M3, M4, M5, M6, M8, M10									

Product Matrix SMD-Solder Technology

	Diameter	7	9	10	13
	SMD pin	M3	M4, M5		M6, M8
	SMD pin with spigot	M3	M4, M5		M6, M8
	SMD socket	M3	M4, M5		M6, M8
	SMD socket with spigot	M3	M4, M5	M6	M8
	SMD socket with through-hole thread	M3	M4, M5		M6

MASSIVE PRESSFIT ZONE, MALE THREAD AND FULL PIN POPULATION

Product Specification

- PCB connection for fixing cable lugs
- fixing midi or mega fuses on the PCB
- UNC thread or customer specific modifications on demand

Dimensional Drawings

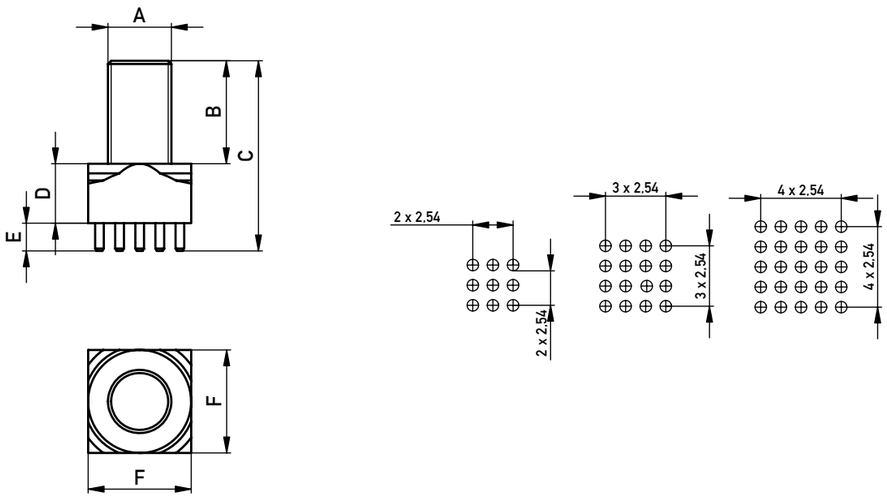

Ordering Information

A	B	C	D	E	F	No. of Pins	Weight	Part Number
M3	5	11	3	3.5	7	9	2.1	225675
M4	6	13	3.5	3.5	9	16	3.6	225676
M4	6	12.5	3	3.5	7	9	3.6	225804
M5	8	15.5	4	3.5	7	9	4.3	225777
M5	8	16	4.5	3.5	9	16	4.9	225677
M6	10	19	5.5	3.5	13	25	10.5	225678
M8	13	24	7.5	3.5	13	25	15.9	225679

Dimension B - F in mm, Weight in g

FEMALE THREAD AND FULL PIN POPULATION

Product Specification

- PCB connection for fixing cable lugs
- fixing midi or mega fuses on the PCB
- UNC thread or customer specific modifications on demand

Dimensional Drawings

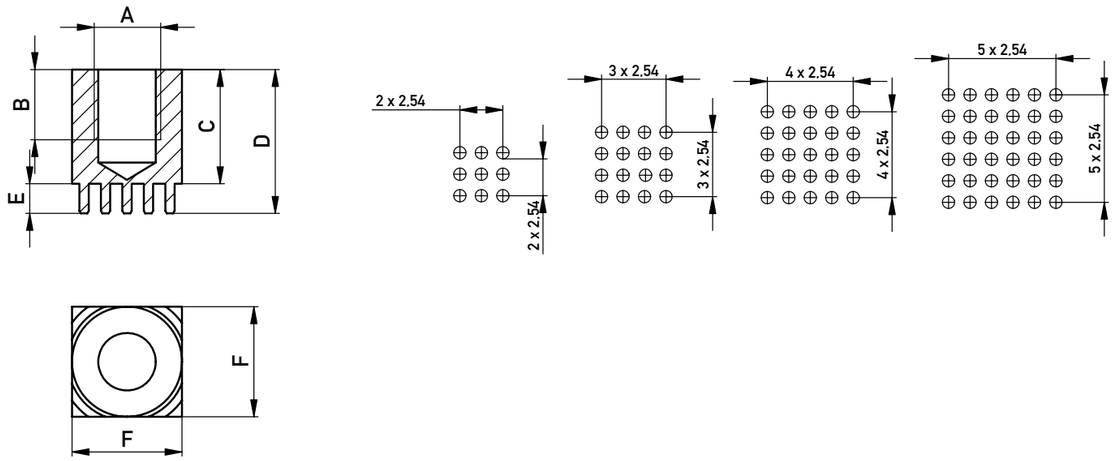

Ordering Information

A	B	C	D	E	F	No. of Pins	Weight	Part Number
M3	3.5	6	9.5	3.5	7	9	2.5	225681
M4	4	7	10.5	3.5	9	16	4.6	225682
M5	4	7	10.5	3.5	9	16	4.4	225683
M6	6.5	10.5	14	3.5	10	16	7	225684
M8	8	13.5	17	3.5	13	25	14.2	225685
M10	11	17.5	21	3.5	16	36	26.2	225686

Dimension B - F in mm, Weight in g

FEMALE THREAD AND TWO ROWS PIN POPULATION

Product Specification

- PCB connection for fixing cable lugs
- available with continuous thread
- fixing midi or mega fuses on the PCB
- when smaller pressfit forces are required
- when the layout does not permit full pin population
- UNC thread or customer specific modifications on demand

Dimensional Drawings

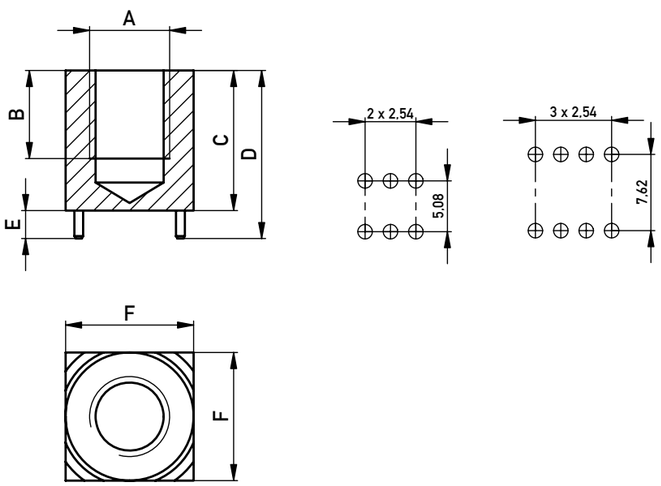

Ordering Information

A	B	C	D	E	F	No. of Pins	Weight	Part Number
M3	5	6	9.5	3.5	7	6	2.3	225693
M4	6	7	10.5	3.5	9	8	4.2	225694
M5	6	7	10.5	3.5	9	8	3.8	225695
M6	9	13.5	17	3.5	10	8	8.2	225696

Dimension B - F in mm, Weight in g

FEMALE THREAD AND CIRCULAR PIN POPULATION

Product Specification

- PCB connection for fixing cable lugs
- available with continuous thread
- fixing midi or mega fuses on the PCB
- when smaller pressfit forces are required
- when the layout does not permit full pin population
- UNC thread or customer specific modifications on demand

Dimensional Drawings

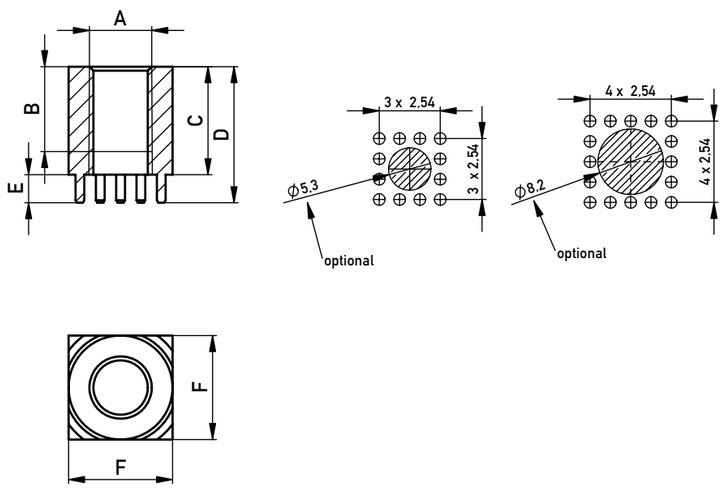

Ordering Information

A	B	C	D	E	F	No. of Pins	Weight	Part Number
M4	5.2	6	9.5	3.5	9	12	3.8	225688
M5	–	6	9.5	3.5	9	12	3.6	225689
M6	–	13.5	17	3.5	13	16	14.6	225690

Dimension B - F in mm, Weight in g

ANGLED, FULL PIN POPULATION

Product Specification

- PCB connection for fixing cable lugs
- connection 90°
- available with thread or through hole
- UNC thread or customer specific modifications on demand
- as a fixing element for assembly onto housing etc.
- e.g. for the connection of high current relays

Dimensional Drawings

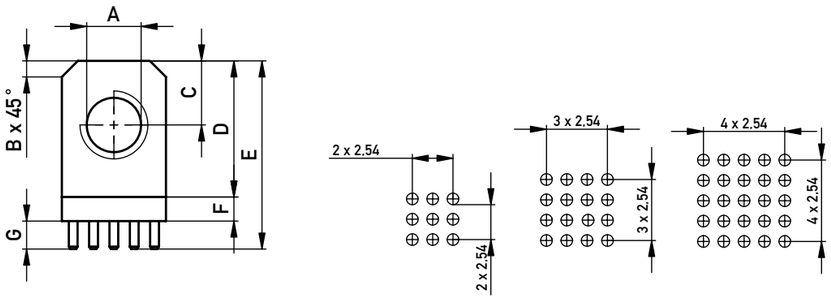

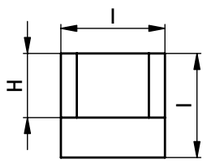

Ordering Information

A	B	C	D	E	F	G	H	I	No. of Pins	Weight	Part Number
M3	1	5	11	17.5	3	3.5	4	7	9	4.2	225699
M4	1.5	5	11	17.5	3	3.5	5	9	16	6.6	225700
M5	1.5	5	11	17.5	3	3.5	5	9	16	6.4	225701
M6	2	8	17	23.5	3	3.5	8	13	25	19	225702
M8	2	8	17	23.5	3	3.5	8	13	25	17.7	225703

Dimension B - I in mm, Weight in g

ANGLED, TWO ROW PIN POPULATION

Product Specification

- PCB connection for fixing cable lugs
- connection 90°
- available with thread or through hole
- UNC thread or customer specific modifications on demand
- when smaller pressfit forces are required
- when the layout does not permit full pin population
- e.g. for the connection of high current relays

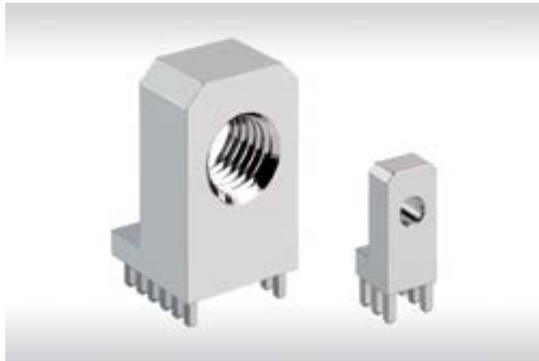

Dimensional Drawings

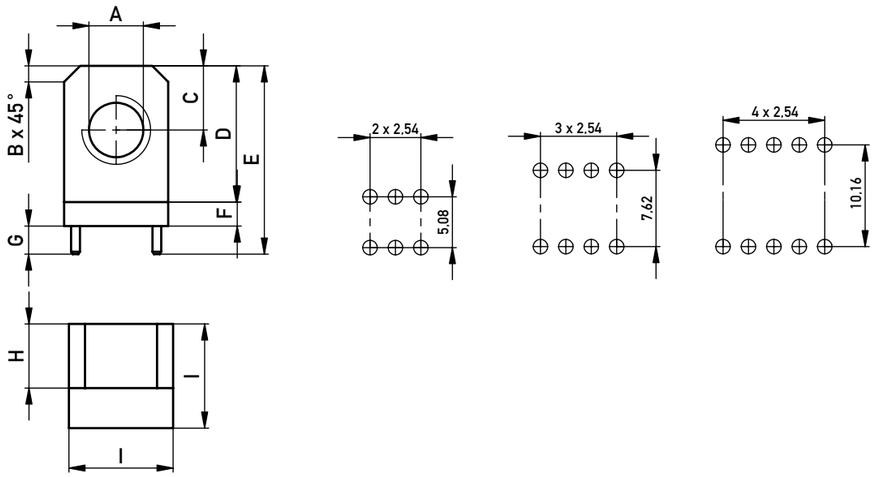

Ordering Information

A	B	C	D	E	F	G	H	I	No. of Pins	Weight	Part Number
M3	1	5	11	17.5	3	3.5	4	7	6	4	225711
M4	1.5	5	11	17.5	3	3.5	5	9	8	6.3	225712
M5	1.5	5	11	17.5	3	3.5	5	9	8	6.1	225713
M6	2	8	17	23.5	3	3.5	8	13	10	18.4	225714
M8	2	8	17	23.5	3	3.5	8	13	10	17.2	225715

Dimension B - I in mm, Weight in g

SMD, MALE THREAD

Product Specification

- for soldering in SMT
- available with and without peg
- blistered for fully automated assembly
- PCB connection for fixing cable lugs
- UNC thread or customer specific modifications on demand
- only available on request

Dimensional Drawings

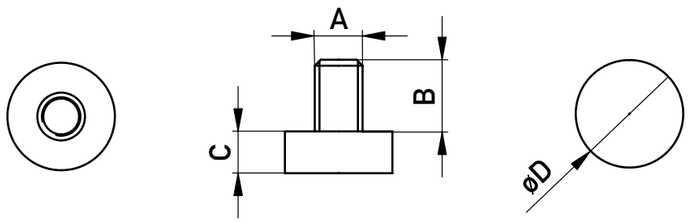

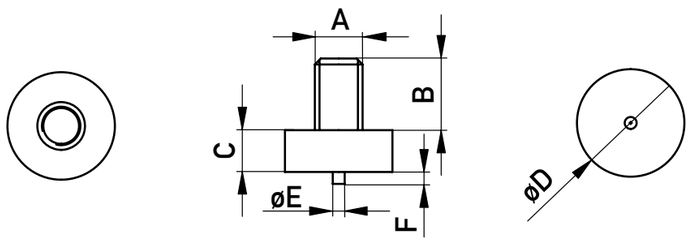

Ordering Information

A	B	C	D	E	F	Mounting Peg
M3	5	3	7	–	–	0
M4	6	3.5	9	–	–	0
M5	8	4.5	9	–	–	0
M6	10	5.5	13	–	–	0
M8	13	7.5	13	–	–	0
M3	5	3	7	1	1	1
M4	6	3.5	9	1	1	1
M5	8	4.5	9	1	1	1
M6	10	5.5	13	1	1	1
M8	13	7.5	13	1	1	1

Dimension B - F in mm

SMD, FEMALE THREAD

Product Specification

- for soldering in SMT
- available with and without peg
- partially blistered for fully automated assembly
- PCB connection for fixing cable lugs
- UNC thread or customer specific modifications on demand
- only available on request

Dimensional Drawings

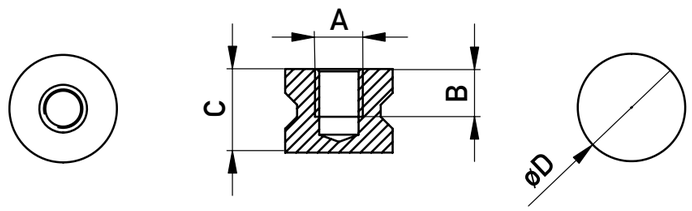

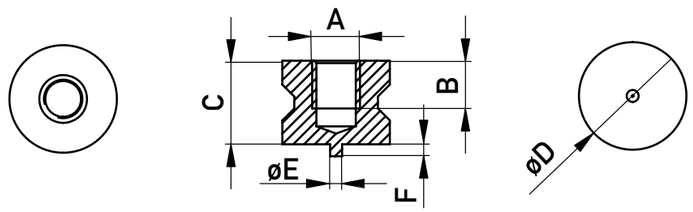

Ordering Information

A	B	C	D	E	F	Mounting Peg
M3	3.5	6	7	–	–	0
M4	4	7	9	–	–	0
M5	4	7	9	–	–	0
M6	6.5	11.5	13	–	–	0
M8	8	13.5	13	–	–	0
M3	3.5	6	7	1	1	1
M4	4	7	9	1	1	1
M5	4	7	9	1	1	1
M6	6.5	11.5	13	1	1	1
M8	8	13.5	13	1	1	1

Dimension B - F in mm

SMD, FEMALE THREAD THROUGHOUT

Product Specification

- for soldering in SMT
- available with and without peg
- blistered for fully automated assembly
- PCB connection for fixing cable lugs
- UNC thread or customer specific modifications on demand
- only available on request

Dimensional Drawings

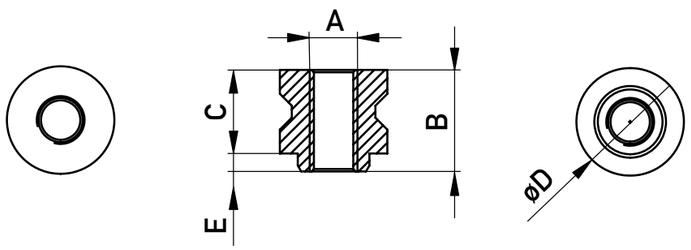

Ordering Information

A	B	C	D	E
M3	7.5	6	7	1.5
M4	8.5	7	9	1.5
M5	8.5	7	9	1.5
M6	13	11.5	13	1.5

Dimension B - E in mm

TWISTED AND CONTACT PROTECTION FOR MALE POWER ELEMENTS

Product Specification

- for placement particularly on the PowerElement pins
- to help prevent short circuits to nearby components
- as protection against contact
- smaller distances between two power elements in layout is feasible

Dimensional Drawings

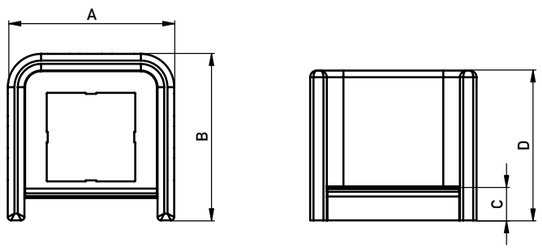

Ordering Information

A	B	C	D	Part Number
16	16	2	9.5	225794
18	18	2.5	14.5	225795
25	25	5	22.5	225796

Dimension A - D in mm

Connect With Us

We make it easy to connect with our experts and are ready to provide the support you need.
Visit **www.te.com/support** to chat with a Product Information Specialist.

te.com

2022 TE Connectivity. All Rights Reserved.

TE Connectivity, TE connectivity (logo) ERNI and Every Connection Counts are trademarks owned or licensed by the TE Connectivity family of companies. All other logos, products and/or company names referred to herein might be trademarks of their respective owners.

The information given herein, including drawings, illustrations and schematics which are intended for illustration purposes only, is believed to be reliable. However, TE Connectivity makes no warranties as to its accuracy or completeness and disclaims any liability in connection with its use. TE Connectivity's obligations shall only be as set forth in TE Connectivity's Standard Terms and Conditions of Sale for this product and in no case will TE Connectivity be liable for any incidental, indirect or consequential damages arising out of the sale, resale, use or misuse of the product. Users of TE Connectivity products should make their own evaluation to determine the suitability of each such product for the specific application.

074634 07/16 Original

CATALOG

TE Connectivity

ERNI Electronics GmbH & Co. KG
Seestraße 9
73099 Adelberg
Germany

Tel +49 7166 50-0
www.te.com
www.erni.com