AUTOMOTIVE GRADE WIDE TERMINAL CHIP RESISTOR

TYPE 3430 SERIES

INTRODUCTION

TE Connectivity (TE) is pleased to introduce this latest automotive grade high power wide terminal chip resistor. The ruthenium based thick film element, along with the wide terminals helps to allow a greater power capability than previously possible with traditional methods. Highly reliable multilayer electrode construction and 100% CCD inspection improve long term stability and reliability.

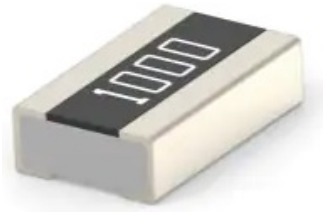

FEATURES

- AEC-Q200 compliance
- Highly reliable multilayer electrode construction
- Compatible with all soldering processes
- 100% CCD inspection
- Moisture sensitivity level - MSL1

Note: *SMD (Surface mount devices) resistors and inductors should be kept in their original packaging to protect them from ESD (Electrostatic Discharge). The full reels can be broken into smaller quantities, without exposing them to ESD, as long as the components are still in the plastic or paper tape. These resistors and inductors should not be removed from the plastic or paper tape unless they are in an ESD protected environment.*

APPLICATIONS

- Automotive industry
- Telecommunication equipment
- Radio and tape recorders, TV tuners
- Digital cameras, watches, pocket calculators
- Computers, instruments
- Medical equipment

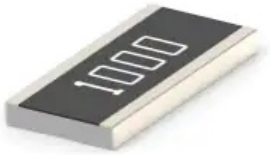

ELECTRICAL CHARACTERISTICS

Item / Size	Size code	Power rating @70°C (W) / Jumper Rated Current	Max Operating Voltage	Max Overload Voltage	Resistance range (mΩ)	Resistance Tolerance	TCR (ppm/°C)
0508	A2	1 W	200 V	400 V	1R ~ 9R76	1%	±150
		Jumper 5 A			10R ~ 1M		±100
					0R <10 mΩ	-	-
0612	B2	1.5 W	200 V	400 V	1R ~ 1M	1%	±100
		Jumper 6 A			0R <10 mΩ	-	-
1020	H2	2 W	200 V	400 V	1R ~ 9R76	1%	±150
		Jumper 10 A			10R ~ 1M		±100
					0R <10 mΩ	-	-
1225	A3	3 W	200 V	400 V	1R ~ 29R4	1%	±200
		Jumper 12 A			30R ~ 1M		±100
					0R <10 mΩ	-	-

Operating temperature range: -55 ~ 155 °C

Operating voltage=√(P*R) or Max. operating voltage listed above, whichever is lower.

Overload voltage=2.5*√(P*R) or Max. overload voltage listed above, whichever is lower.

Tighter tolerances may be available on application

DERATING CURVE

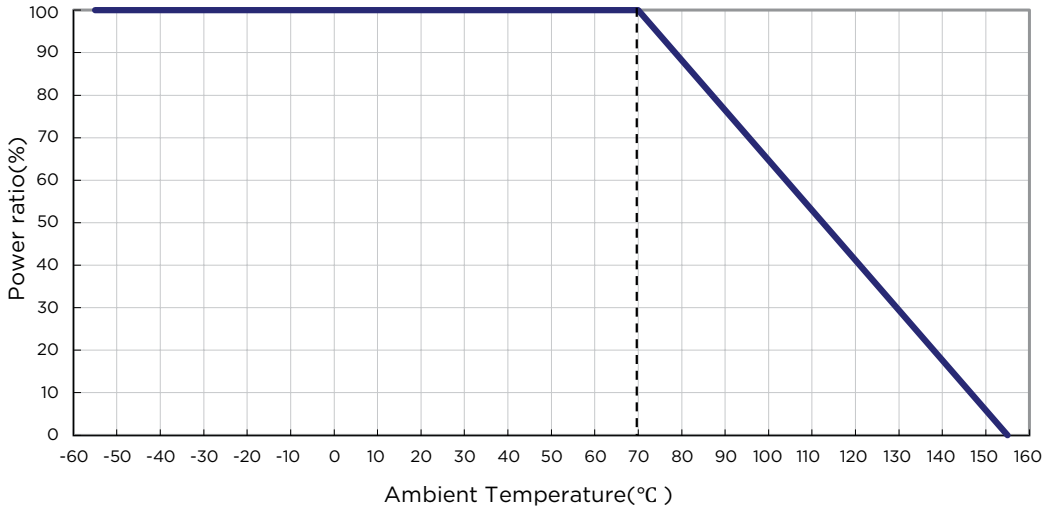

ENVIRONMENTAL CHARACTERISTICS

Item	Requirement	Test Method
Temperature coefficient of resistance (T.C.R.)	As spec	**JIS-C-5201-1 4.8** **IEC-60115-1 4.8** At 25 °C/-55 °C and 25 °C/+125 °C, 25 °C is the reference temperature
Short time overload	±(1.0%+0.05 Ω)	**JIS-C-5201-1 4.13** **IEC-60115-1 4.13** RCWV*2.5 or maximum overload voltage whichever is lower for 5 seconds
Insulation resistance	≥10G	**JIS-C-5201-1 4.13** **IEC-60115-1 4.13** RCWV*2.5 or maximum overload voltage whichever is lower for 5 seconds
Operational life	±(1.0%+0.10 Ω)	**MIL-STD-202 method 108** Condition D steady state TA=125 °C at derated power. Measurement at 24±4 hours after test conclusion.
Biased humidity	±(1.0%+0.10 Ω)	**MIL-STD-202 method 103** 1000 hrs 85 °C/85%RH 10% of operating power. (≤100 V)
High temperature exposure	±(1.0%+0.05 Ω)	**MIL-STD-202 method 108** at +155 °C for 1000 hrs
Board flex	±(1.0%+0.05 Ω)	**AEC-Q200-005** Bending once for 60 seconds 3mm
Solderability	95% min. coverage	**JIS-C-5201-1 4.17** **IEC-60115-1 4.17** **J-STD-002** 245±5 °C for 3 seconds
Resistance to soldering heat	±(0.5%+0.05 Ω)	**MIL-STD-202 method 210** 260±5 °C for 10 seconds
Voltage proof	No breakdown or flashover	**JIS-C-5201-1 4.7** **IEC-60115-1 4.7** 1.42 times maximum overload voltage for 1 minute

Item	Requirement	Test Method
Leaching	Individual leaching area ≤5% Total leaching area ≤10%	**JIS-C-5201-1 4.18** **IEC-60068-2-58 8.2.1** 260 ±5 °C for 30 seconds
Temperature cycling	±(0.5% +0.05 Ω)	**JESD22 method JA-104** -55 °C to +125 °C, 1000 cycles
Mechanical shock	±(0.25% +0.05 Ω)	**MIL-STD-202 method 213** Wave Form: Tolerance for half sine shock pulse. Peak value is 100g's. Normal duration (D) is 6.
Vibration	±(0.5% +0.05 Ω)	**MIL-STD-202 method 204** 5 g's for 20 min., 12 cycles each of 3 orientations, 10-2000 Hz
ESD	±(3% +0.05 Ω)	**AEC-Q200-002** Human body model: 2 KV
Resistance to solvents	No visible damage on appearance and marking.	**MIL-STD-202 method 215** Add aqueous wash chemical - OKEM clean or equivalent. Do not use banned solvents.
Terminal strength	Not broken	**AEC-Q200-006** Force of 1.8 kg for 60 seconds.
Flammability	No ignition of the tissue paper or scorching or the pinewood board	**UL-94** V-0 or V-1 are acceptable. Electrical test not required.
Sulfur Test	△R ±1%	EIA-977 (Condition A) 60 ±2 °C, no power rating for 500 hrs.

RCWV(Rated Continuous Working Voltage)=√(P*R) or Max. Operating Voltage whichever is lower. * not include Jumper(0Ω)

Storage Temperature: 15 °C ~28 °C; Humidity < 80%RH

Shelf Life: 2 years from production date.

CONSTRUCTION AND DIMENSIONS (Unit: mm)

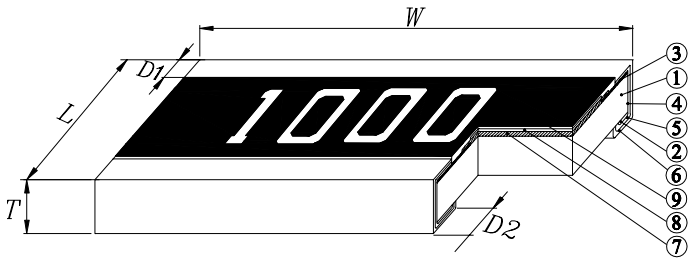

① Alumina Substrate
② Bottom Electrode
③ Top Electrode
④ Edge Electrode
⑤ Barrier Layer
⑥ External Electrode
⑦ Resistor Layer
⑧ Primary Overcoat
⑨ Secondary Overcoat

Type	Size	L (mm)	W (mm)	T (mm)	D1 (mm)	D2 (mm)	Weight (g) 1000 pcs
3430A2	0508	1.25 ±0.1	2.00 ±0.1	0.55 ±0.1	0.30 ±0.15	0.30±0.15	5
Jumper					0.20 ±0.15		
3430B2	0612	1.55 ±0.1	3.00 ±0.15	0.55 ±0.1	0.25 ±0.15	0.40±0.15	8
Jumper							
3430H2	1020	2.45 ±0.15	5.00 ±0.1	0.60 ±0.15	0.35 ±0.20	0.70±0.20	26
Jumper					0.45 ±0.20		
3430A3	1225	3.20 ±0.20	6.40 ±0.15	0.65 ±0.15	0.40 ±0.20	1.10±0.20	41
Jumper					0.50 ±0.20	0.70±0.20	

RECOMMENDED LAND PATTERN

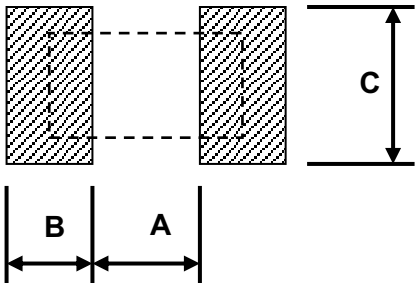

Size	A (mm)	B (mm)	C (mm)
0508	0.55	0.90	2.00
0612	0.70	0.80	3.20
1020	1.00	1.20	5.00
1225	1.00	2.00	7.00

SOLDERING CONDITION (REF. IPC/JEDEC J-STD-020 & J-STD-002)

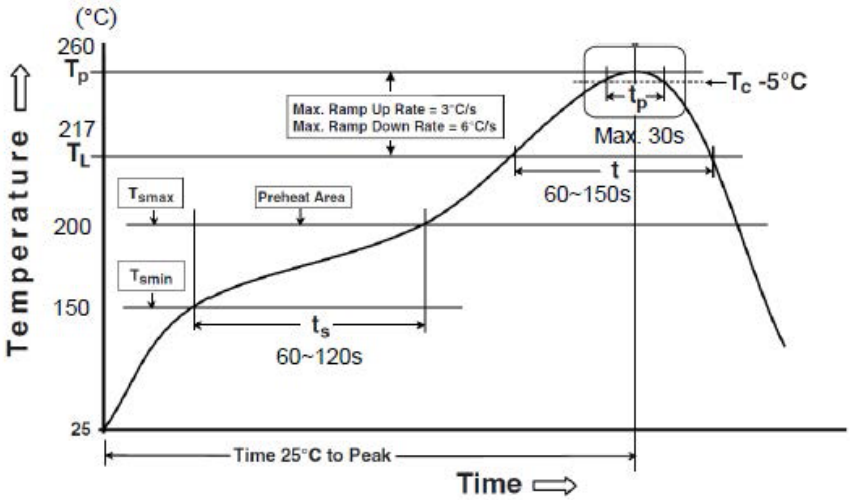

Reflow Profiles	
Profile Feature	**Pb free assembly**
Preheat Min. Temperature (Tsmin) Max Temperature (Tsmax) Preheating time (ts) from (Tsmin to Tsmax)	 150 °C 200 °C 60 - 120 seconds
Ramp-up rate (TL to TP)	3 °C/second max.
Liquidous temperature (TL) Time (tL) maintained above TL	217 °C 60 - 150 seconds
Min. Peak temperature (TP min)	235°C
Max. Peak temperature (TP max)	260°C
Time (tp) within 5 °C of the specified classification temperature (Tc)	30 seconds max.
Ramp-down rate (TP to TL)	6 °C/second max.
Time 25 °C to peak temperature	8 minutes max.

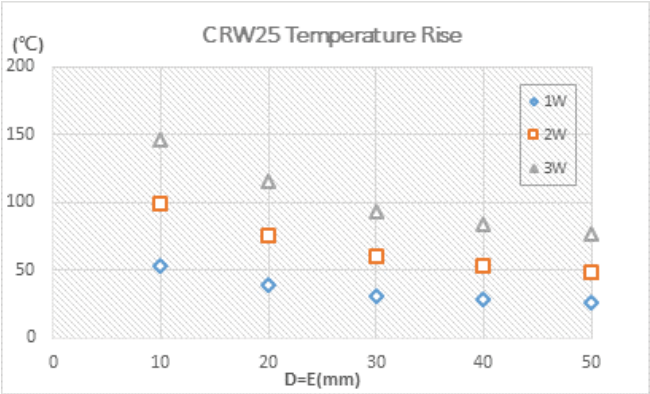

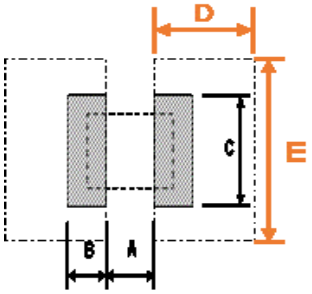

＊FR4 copper board 35μm of copper pad thickness

PACKAGING

Reel dimensions and quantity

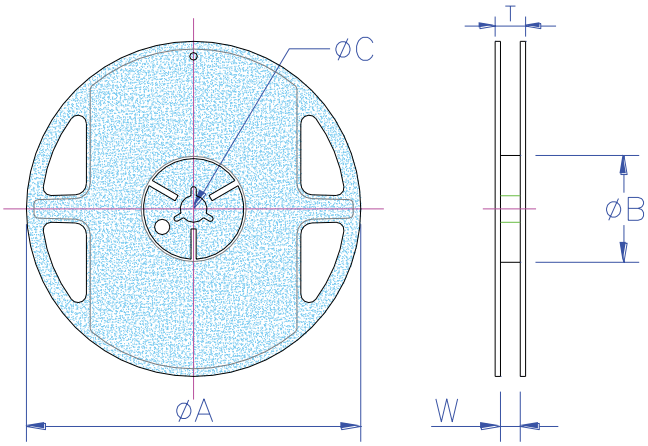

Size	Qty	Tape Width	Reel Diameter	ΦA (mm)	ΦB (mm)	ΦC (mm)	W (mm)	T (mm)
0508	5K	8mm	7 Inch	178.5±1.5	$60^{+1/-0}$	13.0±0.2	9.0±0.5	12.5±0.5
0612	1K							
1020	4K	12mm	7 Inch	178.5±1.5	$60^{+1/-0}$	13.0±0.5	13.0±0.5	15.5±0.5
1225	1K							

PAPER TAPE SPECIFICATION

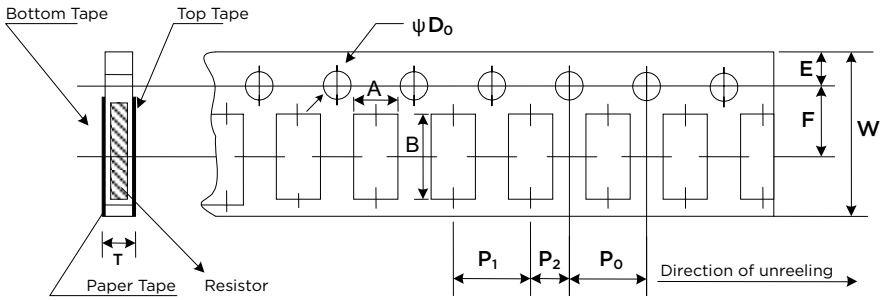

Size	A ±0.10 (mm)	B ±0,20 (mm)	W ±0.20 (mm)	E ±0.10 (mm)	F ±0.05 (mm)	P_0 ±0.10 (mm)	P_1 ±0.05 (mm)	P_2 ±0.05 (mm)	ØD_0 +0.1 -0 (mm)	T ±0.10 (mm)
0508	1.60	2.40	8.0	1.75	3.5	4.0	4.0	2.0	1.5	0.85
0612	1.90	3.50	8.0	1.75	3.5	4.0	4.0	2.0	1.5	0.85

EMBOSSED PLASTIC TAPE SPECIFICATION

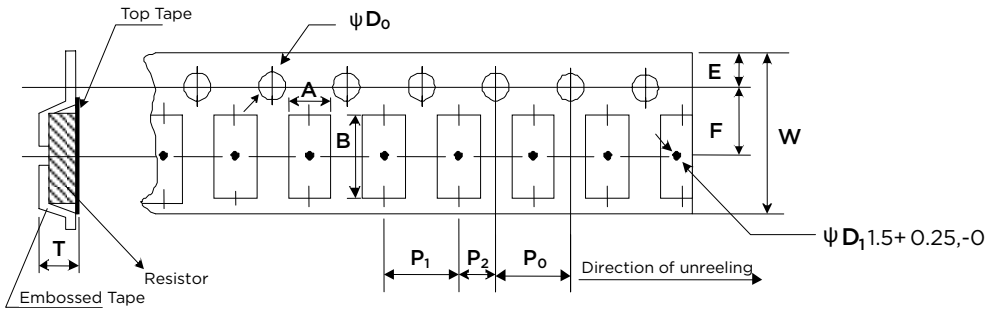

Size	A (mm)	B (mm)	W ±0.10 (mm)	E ±0.10 (mm)	F ±0.05 (mm)	P_0 ±0.05 (mm)	P_1 ±0.10 (mm)	P_2 ±0.05 (mm)	ØD_0 +0.10 (mm)	T ±0.20 (mm)
1020	2.80 ±0.15	5.40 ±0.20	12.00	1.75	5.50	4.00	4.00	2.00	1.55	1.00
1225	3.50 ±0.10	6.70 ±0.10	12.00	1.75	5.50	4.00	4.00	2.00	1.55	1.00

MARKING

All models 4 digit marking

Resistance	22.6Ω	487Ω	499KΩ
Marking	22R6	4870	4993

ORDERING INFORMATION

Part Number

3430 H2 F 3K3 TE

Common Part

3430	Automotive Grade Wide Terminal Chip Resistor

Size Code

A2	0508
B2	0612
H2	1020
A3	1225

Resistance Tolerance

F	1%

Packaging

TDF	1K Reel
TD	5K Reel (0508 & 0612)
TE	4K Reel (1020 & 1225)

Resistance Value

1R0	1Ω
100R	100Ω
1K0	1KΩ
100K	100KΩ
1M0	1MΩ

te.com

©2025 TE Connectivity plc. family of companies. All Rights Reserved.

TE Connectivity, TE connectivity (logo) and Every Connection Counts are trademarks owned or licensed by the TE Connectivity plc. family of companies. All other logos, products and/or company names referred to herein might be trademarks of their respective owners.

While TE has made every reasonable effort to ensure the accuracy of the information in this document, TE does not guarantee that it is error-free, nor does TE make any other representation, warranty or guarantee that the information is accurate, correct, reliable or current. TE reserves the right to make any changes to the information contained herein without prior notice. TE Connectivity assumes only those obligations set forth in the terms and conditions for this product and shall in no event be liable for any incidental, indirect, or consequential damages arising out of the sale, resale, use, or misapplication of the product. TE expressly disclaims any implied warranties with respect to the information contained herein, including, but not limited to, implied warranties of merchantability or fitness for a particular purpose. Dimensions, specifications and/or information contained herein are for reference purposes only and are subject to change without notice. Consult TE for the latest dimensions, specifications and/or information. Users of TE Connectivity products must make their own assessment as to whether the respective product is suitable for the respective desired application.

1773204-9 Rev. C 02/25 ED