Accessories

Guard grilles, streamers	362
Wall rings	372
Connection lines	374
Accessories for Q-motors and energy-saving motors (ESM)	374
Terminal boxes, capacitors, speed setting devices, motor protection switches, star-delta switches, repair switches	381

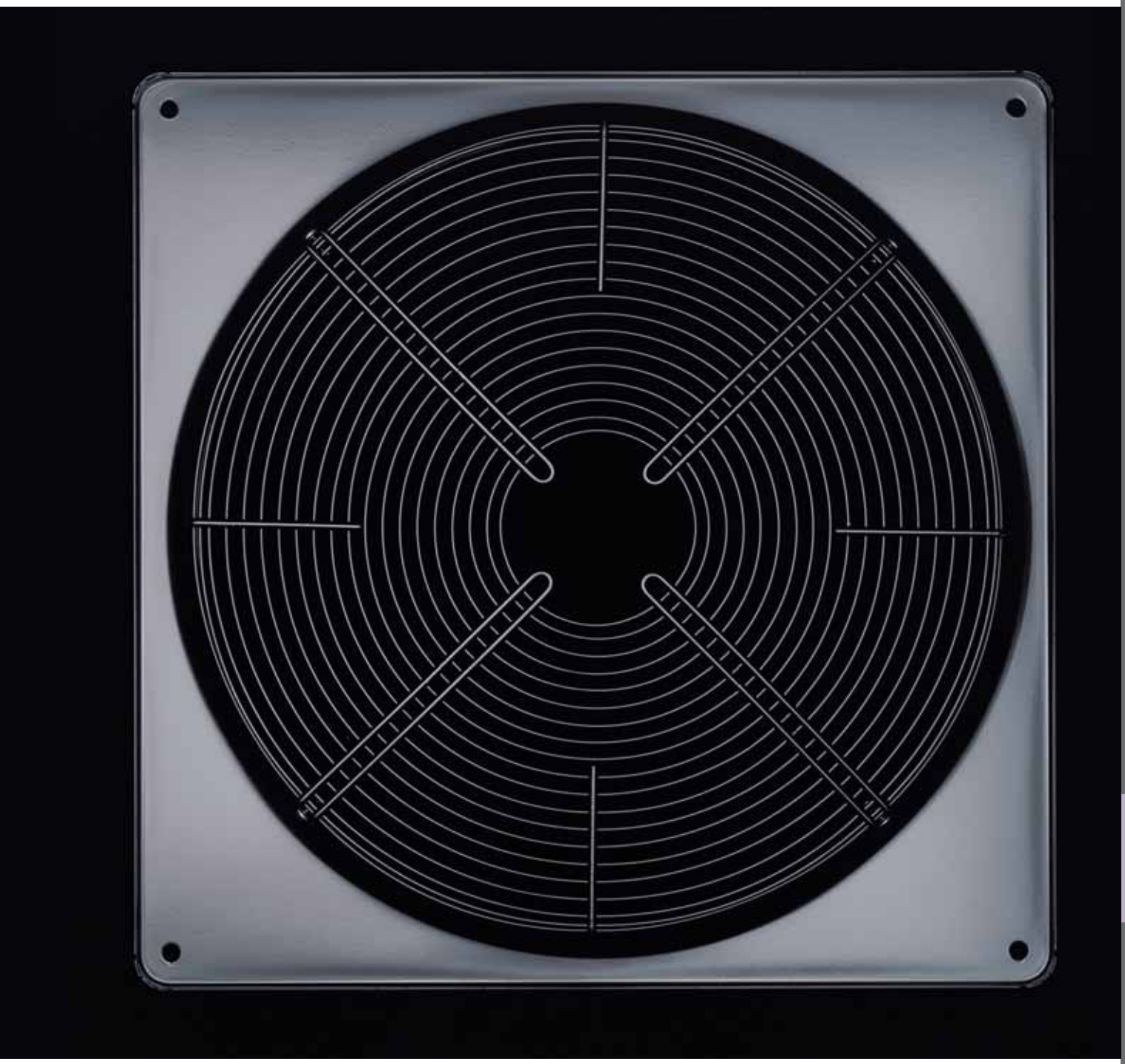

Guard grille

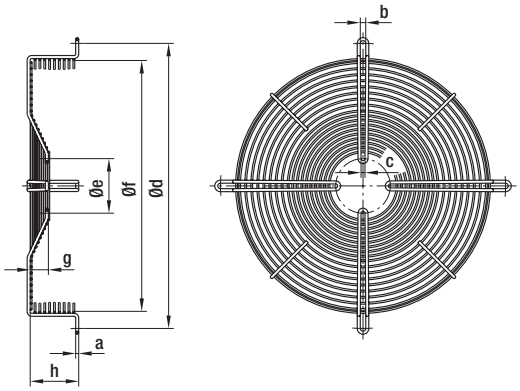

– **Material:** Steel, phosphated and coated in black plastic

Basket guard grille for S series axial fans

Part no.	Size	AC motor	EC motor	a	b	c	d	e	f	g	h
19110-2-4039	200	068	074 (1)	3.9	6.5	4.3	260.0	25.0	229.0	—	39.0
19111-2-4039	250	068	074 (1)	3.9	6.5	4.5	300.0	25.0	271.0	—	38.0
19112-2-4039	250	068	074 (1)	3.9	6.5	4.5	300.0	25.0	271.0	—	53.0
74251-2-4039	250	—	074 (2)	5.0	6.2	4.2	300.0	125.0	265.0	—	38.0
64555-2-4039	300	068	074 (1)	4.5	4.3	4.3	360.0	58.0	329.5	—	50.0
64556-2-4039	300	068	—	4.5	4.3	4.3	360.0	58.0	329.5	26.0	50.0
64557-2-4039	300	074	—	5.0	6.5	6.5	360.0	90.0	324.0	—	50.0
74301-2-4039	300	—	074 (2)	5.0	4.2	4.2	360.0	125.0	331.0	10.0	60.0
64558-2-4039	315	068	—	4.5	6.5	4.5	375.0	58.0	336.5	30.0	80.0
74316-2-4039	315	—	074 (2)	5.0	6.4	4.2	375.0	125.0	344.0	35.0	85.0
64559-2-4039	330	068	—	4.5	6.5	4.5	410.0	58.0	354.5	30.0	80.0
74331-2-4039	330	—	074 (2)	5.0	6.4	4.2	410.0	125.0	370.0	35.0	85.0
64562-2-4039	350	068	—	5.0	6.5	4.5	422.0	58.0	374.0	30.0	80.0
74351-2-4039	350	—	074 (2)	5.0	6.4	4.2	422.0	125.0	378.0	35.0	85.0
64379-2-4039	400	074	—	5.0	9.0	6.5	470.0	90.0	414.0	30.0	80.0
74370-2-4039	400	—	084 (2)	5.0	9.0	6.5	470.0	164.0	420.0	30.0	80.0
64536-2-4039	420	074	—	5.0	9.0	6.5	502.0	90.0	452.0	30.0	80.0
64570-2-4039	420	094	—	5.0	9.0	6.5	502.0	115.0	452.0	30.0	60.0
64378-2-4039	450	074	—	5.0	9.0	6.5	522.0	90.0	476.0	30.0	80.0
74372-2-4039	450	—	084 (2)	5.0	9.0	6.5	522.0	164.0	482.0	30.0	80.0
25943-2-4039	450	094 (3)	—	6.0	9.0	6.5	522.0	115.0	472.0	17.5	67.5
25938-2-4039	450	094 (4)	—	7.0	9.0	7.0	515.0	115.0	472.0	16.5	80.0

subject to alterations (1) DC-fed (2) Mains-powered (3) Blades made of plastic (4) Blades made of sheet steel

Guard grille

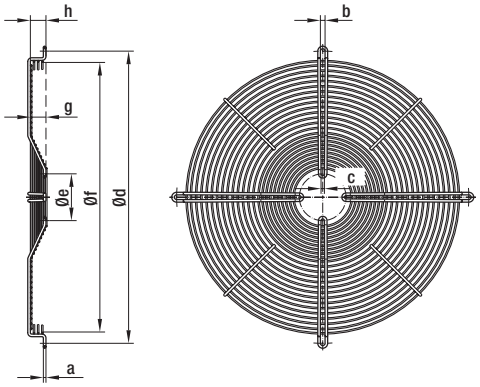

– **Material:** Steel, phosphated and coated in black plastic

Guard grille for S-series axial fans

Part no.	Size	AC motor	EC motor	a	b	c	d	e	f	g	h
18656-2-4039	200	068	—	3.9	4.6	4.6	245.0	58.0	—	—	—
62622-2-4039	200	—	074 (1)	3.9	4.6	4.6	245.0	58.0	—	—	—
09414-2-4039	250	068	—	3.9	4.6	4.6	290.0	58.0	—	—	—
62623-2-4039	250	—	074 (1)	3.9	4.6	4.6	290.0	58.0	—	—	—
74250-2-4039	250	—	074 (2)	5.0	4.2	4.2	290.0	125.0	—	—	—
09415-2-4039	300	068	—	3.9	4.6	4.6	360.0	58.0	—	—	—
62624-2-4039	300	—	074 (1)	3.9	4.6	4.6	360.0	58.0	—	—	—
72320-2-4039	300	068	—	4.5	4.3	4.3	360.0	58.0	329.0	26.0	26.0
64052-2-4039	300	074	—	5.0	6.5	6.5	360.0	90.0	—	—	—
74300-2-4039	300	—	074 (2)	5.0	4.2	4.2	360.0	125.0	—	—	—
64491-2-4039	315	068	—	4.5	6.4	4.3	375.0	58.0	336.0	33.0	30.0
74315-2-4039	315	—	074 (2)	5.0	6.4	4.2	375.0	125.0	344.0	35.0	35.0
64490-2-4039	330	068	—	4.5	6.4	4.3	410.0	58.0	371.0	30.0	30.0
74330-2-4039	330	—	074 (2)	5.0	6.4	4.2	410.0	125.0	370.0	35.0	35.0
64563-2-4039	350	068	—	5.0	6.5	4.5	422.0	58.0	374.0	30.0	30.0
74350-2-4039	350	—	074 (2)	5.0	6.4	4.2	422.0	125.0	378.0	35.0	35.0
64538-2-4039	400 / 420	074	—	5.0	9.0	6.5	502.0	90.0	452.0	30.0	30.0
74373-2-4039	400	—	084 (2)	5.0	9.0	6.5	502.0	164.0	458.0	30.0	38.0
64539-2-4039	450	074	—	5.0	9.0	6.5	522.0	90.0	476.0	30.0	30.0
74374-2-4039	450	—	084 (2)	5.0	9.0	6.5	522.0	164.0	482.0	30.0	38.0
25950-2-4039	450	094	—	7.0	9.0	7.0	560.0	115.0	517.0	16.5	38.0

subject to alterations (1) DC-powered (2) Mains-powered

Guard grille

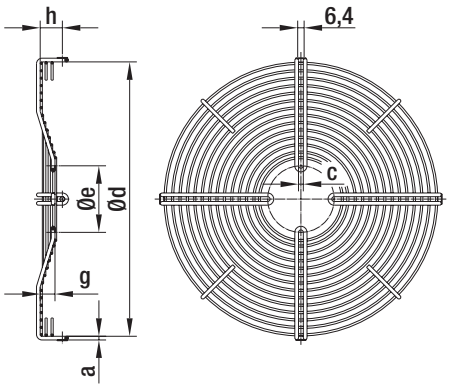

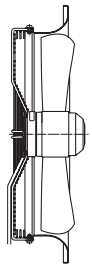

Typical installation

- **Material:** Steel, phosphated and coated in black plastic
- **Wall rings:** See p. 373
- **Comment:** Contact us for article numbers for complete fans.

Guard grille for S series fans (for nozzle-side mounting to square wall ring with long nozzle)

Part no.	Size	AC motor	EC motor	a	c	d	e	g	h
35803-2-4039	400	074 (4 poles)	—	5.0	6.5	413.0	90.0	—	16.0
35804-2-4039	400	074 (6 poles)	—	5.0	6.5	413.0	90.0	30.0	28.0
74377-2-4039	400	—	084 (2)	5.0	6.5	413.0	164.0	30.0	48.0
35805-2-4039	450	074 (4 poles)	—	5.0	6.5	466.0	90.0	—	25.0
35806-2-4039	450	074 (6 poles)	—	5.0	6.5	466.0	90.0	20.0	30.0
74376-2-4039	450	—	084 (2)	5.0	6.5	467.0	164.0	30.0	48.0
26510-2-4039	450	094	—	7.0	7.0	466.0	115.0	16.5	41.0

subject to alterations (2) mains-powered

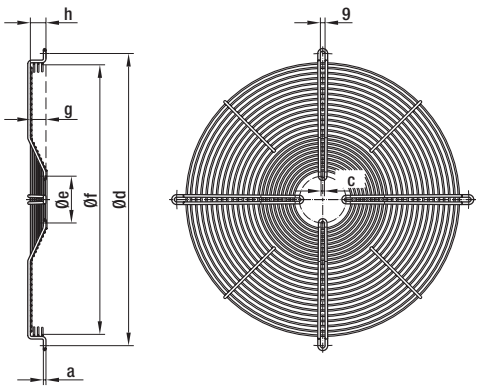

- **Material:** Steel, phosphated and coated in black plastic

Basket guard grille for S series fans (for mounting to square wall ring with long nozzle)

Part no.	Size	AC motor	EC motor	a	c	d	e	f	g	h
63978-2-4039	420 / 450	074	—	5.0	6.5	562.0	90.0	526.0	30.0	30.0
74375-2-4039	450	—	084 (2)	5.0	6.5	562.0	164.0	526.0	30.0	38.0
25950-2-4039	450	094	—	7.0	7.0	560.0	115.0	523.0	16.5	38.0

subject to alterations (2) mains-powered

Guard grille

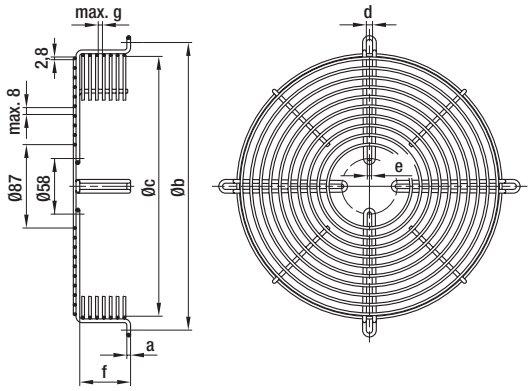

– **Material:** Steel, phosphated and coated in black plastic

Basket guard grille for A series axial fans

Part no.	Size	a	b	c	d	e	f	g
19110-2-4039	200	3.9	260.0	229.0	6.5	4.3	39.0	6.0
19111-2-4039	250	3.9	300.0	271.0	6.5	4.5	38.0	6.0
19112-2-4039	250	3.9	300.0	271.0	6.5	4.5	53.0	6.0
19113-2-4039	300	3.9	360.0	327.0	6.5	4.5	35.0	6.0
19114-2-4039	350	4.5	422.0	375.0	6.5	4.5	72.0	6.0
19115-2-4039	350	4.5	422.0	380.0	6.5	4.5	54.0	6.0
63406-2-4039	400	4.5	470.0	428.0	9.0	4.5	67.0	8.0

subject to alterations

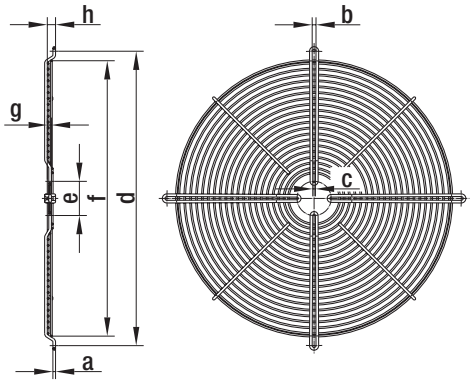

– **Material:** Steel, phosphated and coated in black plastic

Guard grille for A series axial fans

Part no.	Size	a	b	c	d	e	f	g	h
18656-2-4039	200	3.9	4.6	4.6	245.0	58.0	195.0	—	—
09414-2-4039	250	3.9	4.6	4.6	290.0	58.0	247.0	—	—
09415-2-4039	300	3.9	4.6	4.6	360.0	58.0	300.0	—	—
19699-2-4039	315	4.5	6.3	4.3	375.0	58.0	327.0	—	3.5
69667-2-4039	350	4.5	6.5	4.5	422.0	58.0	387.0	—	6.5
19117-2-4039	400	4.5	6.3	4.3	500.0	58.0	467.5	7.0	14.0

subject to alterations

Guard grille

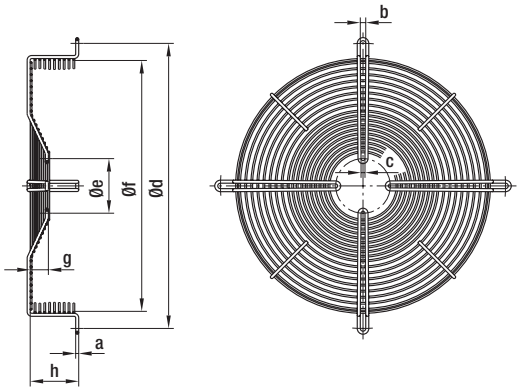

– **Material:** Steel, phosphated and coated in black plastic

Basket guard grille for K series axial fans

Part no.	Size	a	b	c	d	e	f	g	h
66024-2-4039	250	4.5	4.3	4.3	300.0	58.0	271.0	26.0	60.0
77709-2-4039	300	3.9	4.5	4.5	360.0	58.0	340.0	26.0	26.0
19115-2-4039	350	4.5	6.5	4.5	422.0	58.0	380.0	—	54.0
62229-2-4039	360	4.5	6.3	4.3	400.0	58.0	357.0	12.0	16.0
64378-2-4039	450	5.0	9.0	6.5	522.0	90.0	476.0	30.0	80.0
64539-2-4039	450	5.0	9.0	6.5	522.0	90.0	476.0	30.0	30.0

subject to alterations

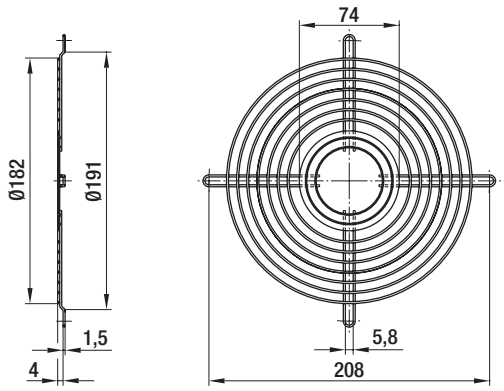

– **Material:** Steel, galvanized and blue chromated (alternative: nickel-plated)

Guard grille for diagonal fan

Part no.	Size
26388-2-4039	180

subject to alterations

ebmpapst

Guard grille

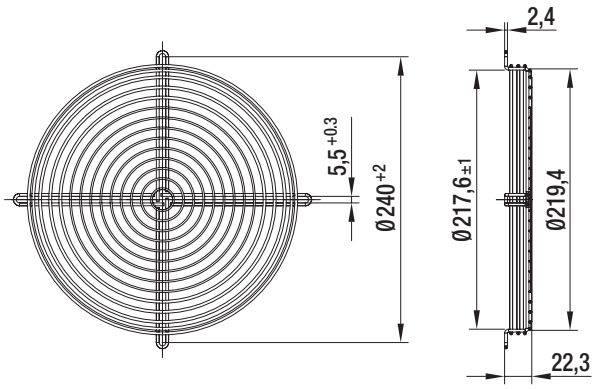

– **Material:** Steel, plastic-coated (silver-metallic gloss)

Guard grille for diagonal fan (inlet side mounting)

Part no.	Size
35139-2-4039	208

subject to alterations

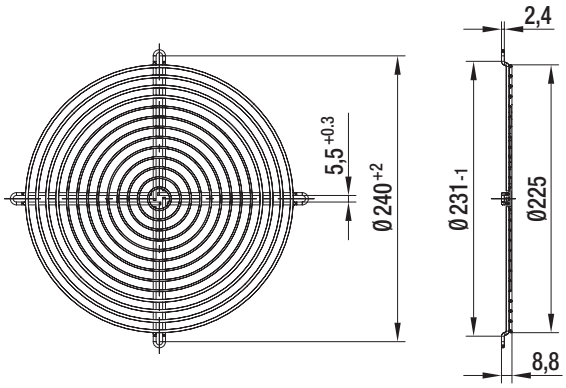

– **Material:** Steel, plastic-coated (silver-metallic gloss)

Guard grille for diagonal fan (outlet side mounting)

Part no.	Size
35138-2-4039	208

subject to alterations

Guard grille

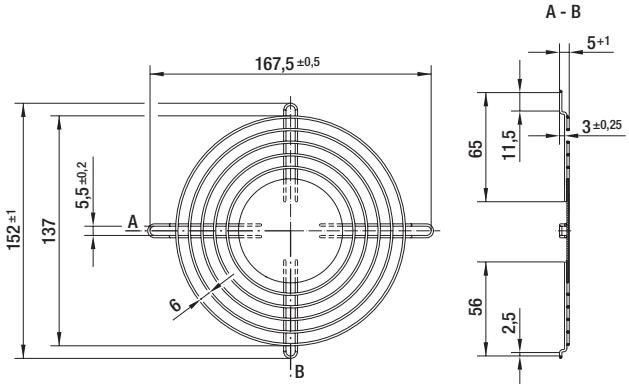

– **Material:** Steel, galvanized and blue passivated

Guard grille for diagonal fan

Part no.	Size
51019-2-4039	130

subject to alterations

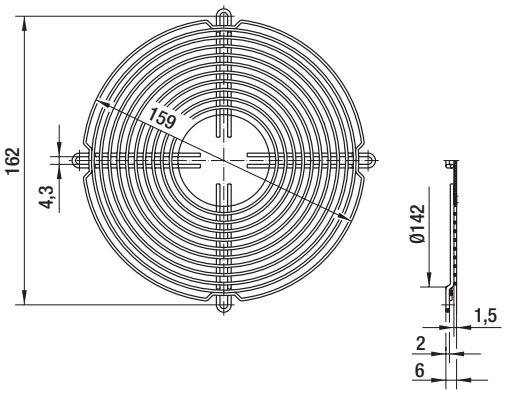

– **Material:** Steel, galvanized and blue chromated (alternative: nickel-plated)

Guard grille for axial fan (according to EN 294)

Part no.	Size
50952-2-4039	130 / 142 / 143

subject to alterations

Guard grille

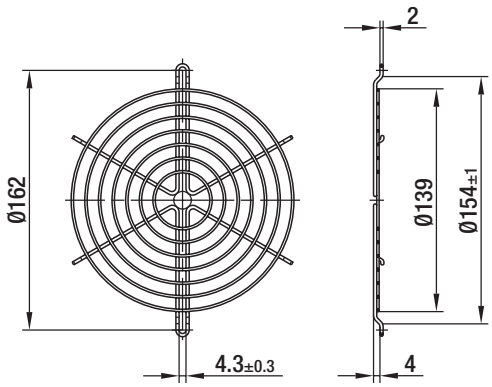

– **Material:** Steel, plastic-coated (silver-metallic gloss)

Guard grille for diagonal fan

Part no.	Size
03749-2-4039	142
04013-2-4039	143

subject to alterations

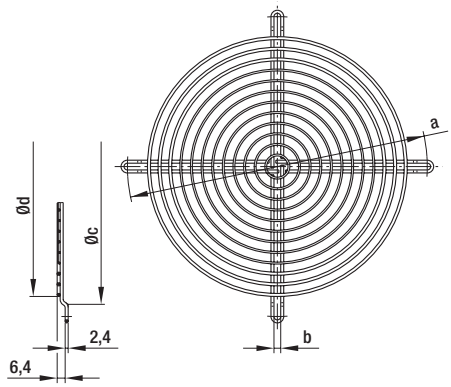

– **Material:** Steel, plastic-coated (silver-metallic gloss)

Guard grille for diagonal fan

Part no.	Size	a	b	c	d
78128-2-4039	200	240.0	5.4	221.5	208.0
09418-2-4039	250	295.0	6.4	278.5	270.0

subject to alterations

Guard grille

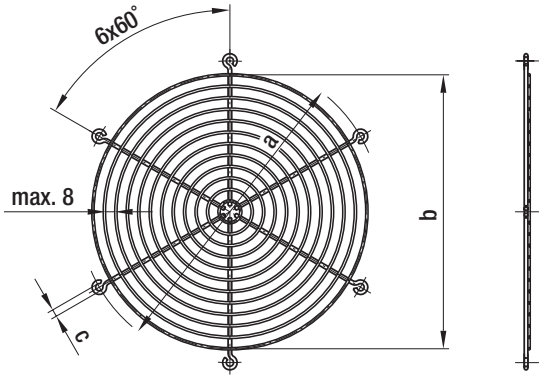

– **Material:** Steel, phosphated and coated in black plastic

Guard grilles (e.g. for axial fans)

Part no.	Size	a	b	c
09513-2-4039	200	250.0	227.0	6.0
09518-2-4039	250	295.0	265.0	7.0
09532-2-4039	300	380.0	323.0	9.0

subject to alterations

Streamers

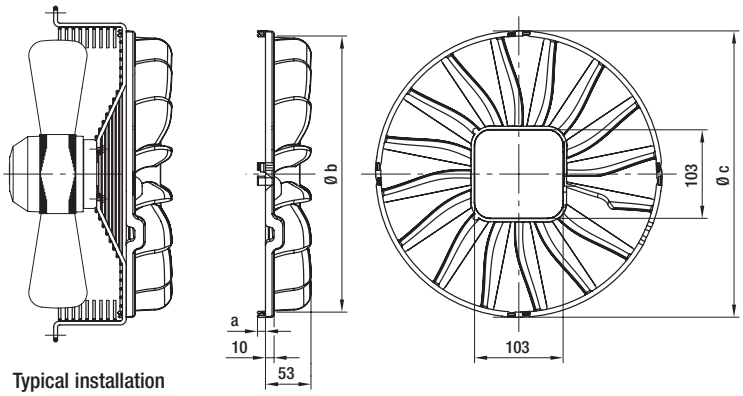

Typical installation

– **Material:** Plastic PA6, 30GV, black (in accordance with UL 94 HB)

Streamers for axial fans

Part no.	Size	a	b	c	Standard types (1)	
29550-2-2955	315	10.0	321.0	333.0	S4D 315-AP10 -30 S4E 315-AP18 -30 S6E 315-AP02 -30	
29551-2-2955	350	10.0	361.0	373.0	S4D 350-BR06 -30 S4D 350-AR06 -30 S4E 350-BR06 -30	S4E 350-AR06 -30 S6E 350-BR08 -30 S6E 350-AR08 -30
29552-2-2955	400	10.0	401.0	413.0	S4D 400-AP12 -03 S4E 400-AP02 -03 S6E 400-AP10 -30	
29553-2-2955	450	12.0	466.0	478.0	S4E 450-GA09 -01	
29554-2-2955	500	13.0	496.0	508.0	S4E 500-CY09 -01 S4E 500-AY09 -01 S6E 500-CS05 -01	S6E 500-AS05 -01 S6E 500-CT05 -01 S6E 500-AT05 -01

subject to alterations

(1) Mounting options for other axial fans respectively basket guard grilles upon request.

Thrust ranges (measured in a typical heat exchanger)

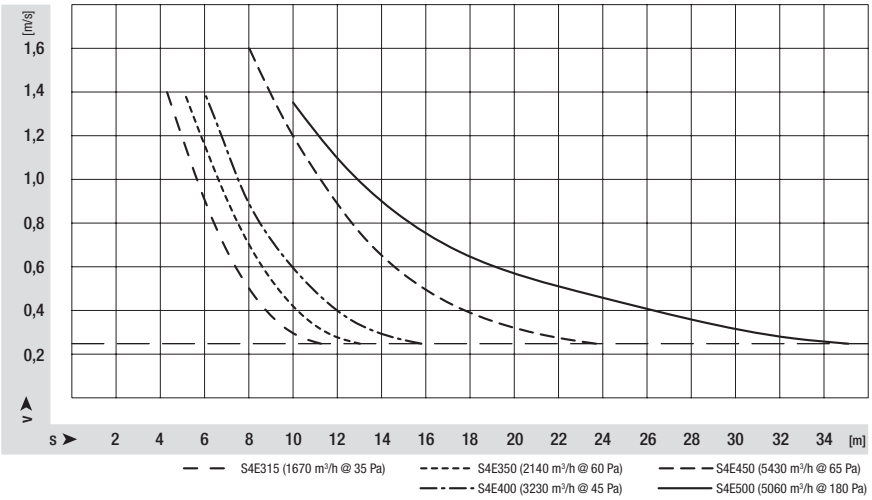

Comparison

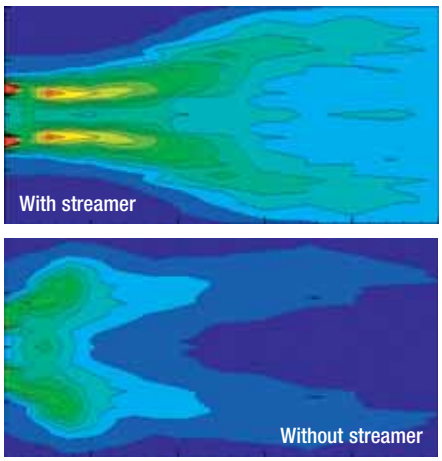

Wall rings

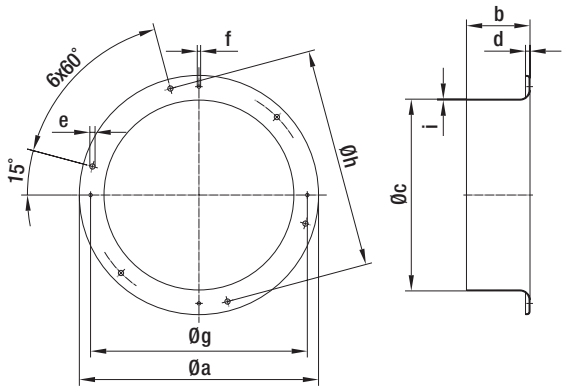

– **Material:** Sheet steel, pre-galvanised and coated in black plastic

Wall rings with long nozzle for axial fans

Part no.	Size	a	b	c	d	e	f	g	h	i
18912-2-4037	200	280.0	80.0	202.5	5.0	7.0	4.5	245.0	250.0	1.25
64009-2-4037	250 (S series)	320.0	86.5	259.5	6.0	7.0	4.5	290.0	295.0	1.25
18910-2-4037	250 (A series)	320.0	85.0	256.5	6.0	7.0	4.5	290.0	295.0	1.25
18908-2-4037	300	397.0	80.0	326.0	11.0	9.0	M4	360.0	380.0	1.50
18902-2-4037	315	397.0	74.0	347.0	11.0	9.0	M6	374.0	380.0	1.50
18892-2-4037	330	440.0	80.0	369.0	11.0	9.0	M6	408.0	404.0	1.50
18900-2-4037	350	460.0	80.0	390.0	12.0	9.0	M6	422.0	442.0	1.50
18930-2-4037	400	528.0	96.0	419.0	12.0	9.0	M8	500.0	504.0	1.50
18929-2-4037	420	544.0	96.0	447.0	12.0	9.0	M8	500.0	520.0	1.50
64000-2-4037	450 (1)	607.0	100.0	465.0	14.0	11.0	M8	560.0	578.0	1.50

subject to alterations

(1) For mounting the axial fan, use guard grille 63978-2-4039

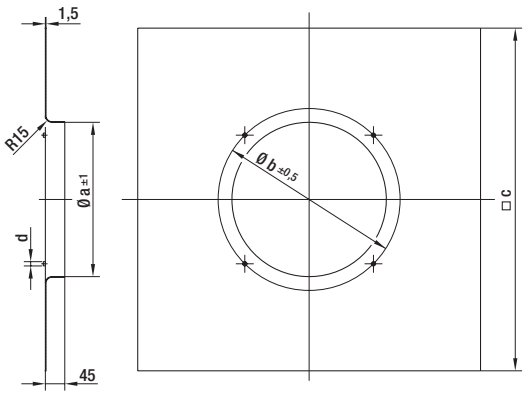

– **Material:** Sheet steel, pre-galvanised

Square wall rings with short nozzle for S series axial fans

Part no.	Size	a	b	c	d
35222-2-4037	350	358.0	422.0	795.0	M6
35223-2-4037	400	400.0	468.0	840.0	M8
35224-2-4037	420	426.0	500.0	850.0	M8
35225-2-4037	450	452.0	515.0	850.0	M8

subject to alterations

Wall rings

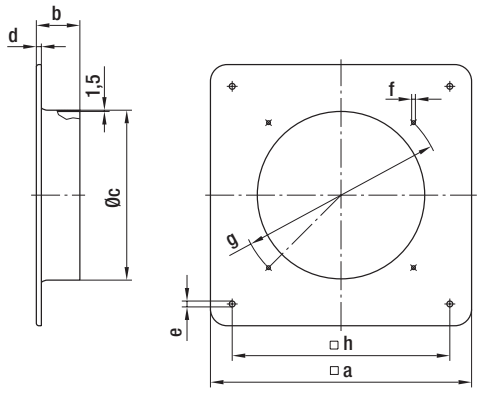

– **Material:** Sheet steel, pre-galvanised and coated in black plastic

Square wall rings with long nozzle for axial fans

Part no.	Size	a	b	c	d	e	f	g	h
18918-2-4037	200	312.0	52.0	203.0	6.0	7.0	4.5	245.0	260.0
37701-2-4037	250 (S series)	370.0	56.0	260.0	6.0	7.0	4.5	290.0	320.0
18933-2-4037	250 (A series)	370.0	55.0	257.0	6.0	7.0	4.5	290.0	320.0
18924-2-4037	300	430.0	80.0	326.0	11.0	9.0	4.5	360.0	380.0
18903-2-4037	315	430.0	72.5	345.0	11.0	9.0	M6	375.0	380.0
18901-2-4037	350	485.0	80.0	388.0	12.0	9.0	M6	422.0	435.0
64005-2-4037	400	540.0	98.0	417.0	12.0	9.0	M8	500.0	490.0
64006-2-4037	420 (1)	576.0	94.0	439.0	14.0	11.0	M8	560.0	535.0
64007-2-4037	450 (1)	576.0	100.0	465.0	14.0	11.0	M8	560.0	535.0

subject to alterations

(1) For mounting the axial fan, use guard grille 63978-2-4039

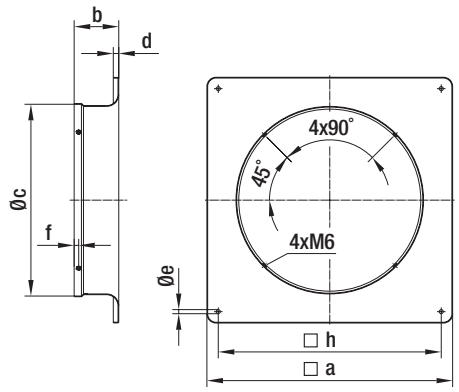

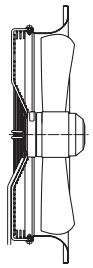

Typical installation

– **Material:** Sheet steel, pre-galvanised and coated in black plastic
– **Guard grilles:** See p. 364
– **Comment:** Contact us for article numbers for complete fans.

Square wall rings with long nozzle for S series axial fans (for nozzle-side mounting)

Part no.	Size	a	b	c	d	e	f	h
64020-2-4037	400	540.0	98.0	409.0	12.0	9.0	10.0	490.0
64001-2-4037	450	576.0	100.0	463.0	14.0	11.0	10.0	535.0

subject to alterations

Connection leads

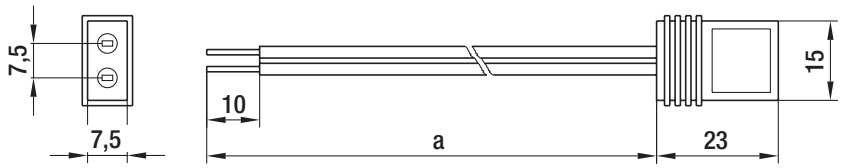

– **Plug terminal:** 2.8 x 0.5 mm

Connection lines for axial compact fan (with plug terminal)

Part no.	Size	a
01434-4-6711	142 / 143	610
01477-4-6711	142 / 143	1000
01505-4-6711	142 / 143	2000

subject to alterations

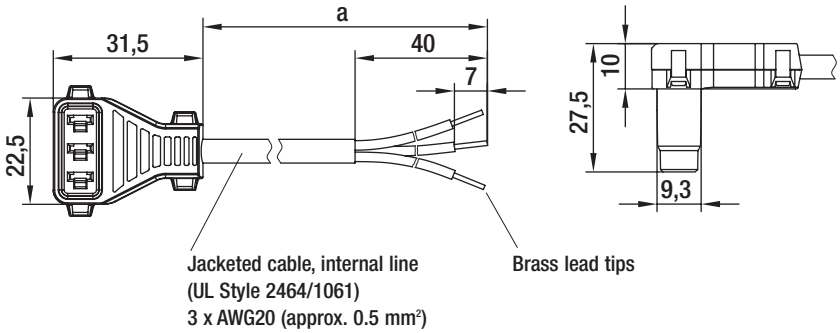

– **Design:** Cable conforms to UL standards, sealed plug

Connection lines for energy-saving motors (ESM)

Part no.	a
10637-4-1040	450
10640-4-1040	600
10638-4-1040	1500
10639-4-1040	32000

subject to alterations

Programming device

for energy-saving motors (ESM)

- **Description:** Programming unit for setting 2 possible speeds via the USB port of a PC.
- **System requirements:** Windows 2000 / XP
- **Delivery scope:** Programming unit
  Supply plug unit
  USB connection line
  Motor connecting cable
  Programming software
- **Type of protection:** IP 20
- **Protection class:** III

Nominal data	Perm. amb. temp.	Perm. storage temp.
Type	**°C**	**°C**
CBC 000-AC02 -02	0 to +45	-20 to +65

subject to alterations

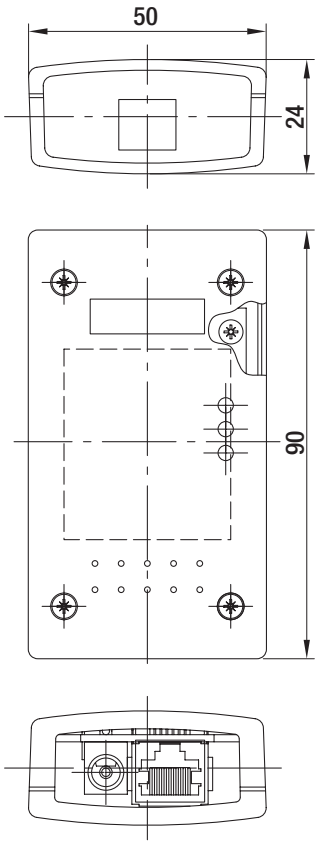

Connection leads

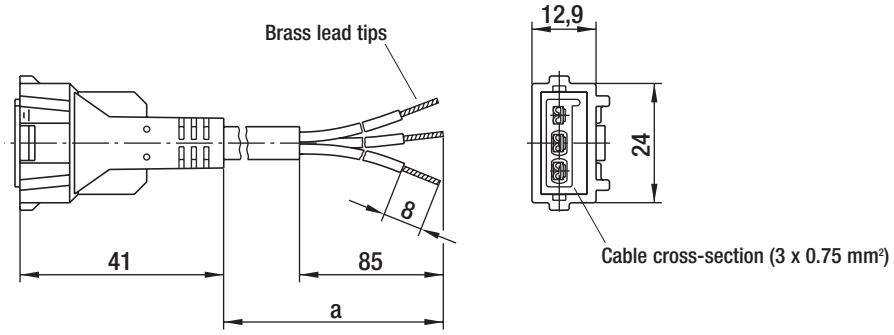

Connection lines for Q-motors (plug terminal design)

Part no.	a
79572-4-6711	420
79573-4-6711	970
79574-4-6711	1470
79575-4-6711	1970
79576-4-6711	2470
79577-4-6711	2970
79578-4-6711	3470
79579-4-6711	3970
79580-4-6711	4470
62402-4-6711	4970

subject to alterations

Axial impellers

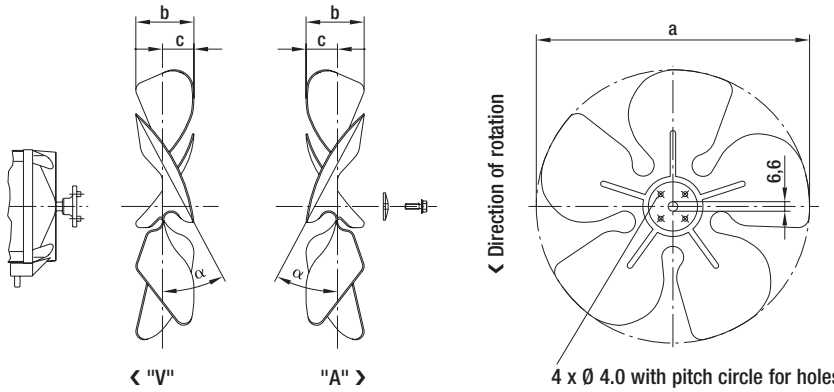

❮ "V" "A" ❯

4 x Ø 4.0 with pitch circle for holes Ø 25.4 mm

– **Material:** Sheet aluminium

Axial impeller for Q-motors and energy-saving motors (ESM)

Part no. for direction of air flow "V"	Part no. for direction of air flow "A"	Blade angle α	a	b	c
73801-2-3634	**73761-2-3634**	22° ± 1°30'	154.0	27.5	14.0
73802-2-3634	**73762-2-3634**	28° ± 1°30'	154.0	32.0	16.0
73803-2-3634	**73763-2-3634**	34° ± 1°30'	154.0	37.0	18.0
73804-2-3634	**73764-2-3634**	22° ± 1°30'	172.0	31.0	14.5
73805-2-3634	**73765-2-3634**	28° ± 1°30'	172.0	36.0	17.0
73806-2-3634	**73766-2-3634**	34° ± 1°30'	172.0	42.0	21.0
73807-2-3634	**73767-2-3634**	22° ± 1°30'	200.0	32.0	15.5
73808-2-3634	**73768-2-3634**	28° ± 1°30'	200.0	37.5	18.0
73809-2-3634	**73769-2-3634**	34° ± 1°30'	200.0	45.0	22.0
73810-2-3634	**73770-2-3634**	22° ± 1°30'	230.0	35.0	17.5
73811-2-3634	**73771-2-3634**	28° ± 1°30'	230.0	43.0	21.5
73812-2-3634	**73772-2-3634**	34° ± 1°30'	230.0	50.0	24.0
73813-2-3634	**73773-2-3634**	22° ± 1°30'	254.0	37.0	19.0
73814-2-3634	**73774-2-3634**	28° ± 1°30'	254.0	45.0	23.5
73815-2-3634	**73775-2-3634**	34° ± 1°30'	254.0	52.0	26.0
73816-2-3634	**73776-2-3634**	22° ± 1°30'	300.0	43.0	21.5
73817-2-3634	**73777-2-3634**	28° ± 1°30'	300.0	53.5	26.5
73818-2-3634	**73778-2-3634**	34° ± 1°30'	300.0	61.0	30.0

subject to alterations

Guard grille

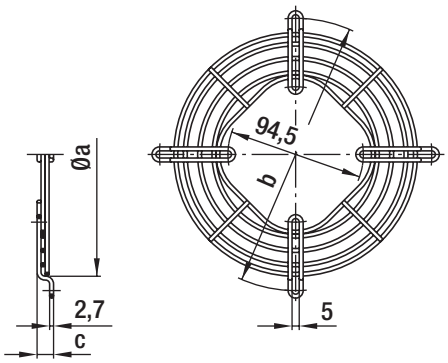

– **Material:** Steel, galvanized and blue chromated

Guard grille for Q-motors and energy-saving motors (ESM)

Part no.	Size	Max. blade angle α at "V"	Max. blade angle α at "A"	a	b	c
50967-2-4039	154	34°	34°	170.0	190.0	11.5
50968-2-4039	172	34°	34°	188.0	208.0	11.5
50969-2-4039	200	34°	28°	214.0	236.0	11.5
50970-2-4039	230	28°	28°	246.0	266.0	17.5
50971-2-4039	254	28°	28°	270.0	290.0	17.5
50972-2-4039 (1)	300	—	22°	324.0	344.0	17.5

subject to alterations

(1) When used with M4Q045-EF, blade angles up to 34° are possible

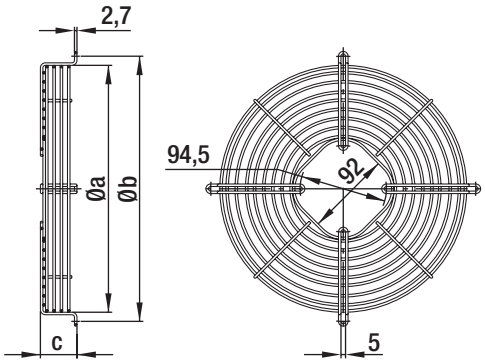

– **Material:** Steel, galvanized and blue chromated

Basket guard grille for Q-motors and energy-saving motors (ESM)

Part no.	Size	Max. blade angle α at "V"	Max. blade angle α at "A"	a	b	c
66309-2-4039	172	34°	34°	188.0	208.0	37.5
66310-2-4039	200	34°	28°	212.0	236.0	37.5
66311-2-4039	230	28°	28°	246.0	266.0	40.0
66312-2-4039	254	28°	28°	270.0	290.0	40.0
66313-2-4039 (1)	300	—	22°	324.0	344.0	46.8

subject to alterations

(1) When used with M4Q045-EF, blade angles up to 34° are possible

Wall rings

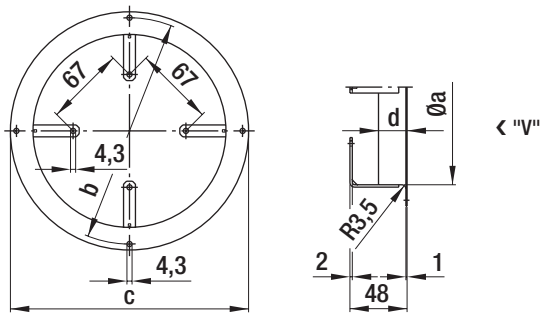

– **Material:** Sheet steel, coated in grey plastic

Wall rings for Q-motors and energy-saving motors (ESM), direction of air flow "V"

Part no.	Size	Max. blade angle α	a	b	c	d
52542-2-4037	154	34°	164.0	190.0	200.0	24.0
52543-2-4037	172	34°	182.0	208.0	223.0	24.0
52544-2-4037	200	34°	210.0	236.0	246.0	24.0
52545-2-4037	230	28°	240.0	266.0	276.0	24.0
52546-2-4037	254	28°	264.0	290.0	300.0	24.0
52547-2-4037 (1)	300	22°	308.0	344.0	356.0	24.0

subject to alterations

(1) When used with M4Q045-EF, blade angles up to 34° are possible

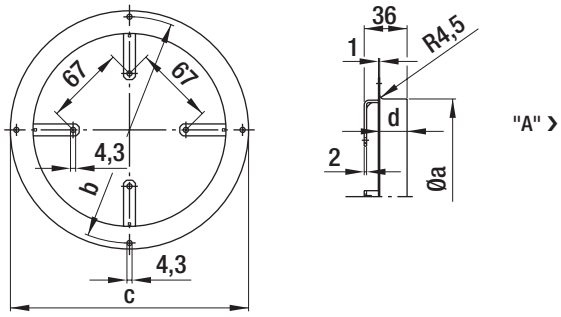

– **Material:** Sheet steel, coated in grey plastic

Wall rings for Q-motors and energy-saving motors (ESM), direction of air flow "A"

Part no.	Size	Max. blade angle α	a	b	c	d
52550-2-4037	154	34°	162.0	190.0	200.0	24.0
52551-2-4037	172	34°	180.0	208.0	223.0	24.0
52552-2-4037	200	28°	208.0	236.0	246.0	24.0
52553-2-4037	230	28°	238.0	266.0	276.0	24.0
52554-2-4037	254	28°	262.0	290.0	300.0	24.0
52555-2-4037 (1)	300	22°	308.0	344.0	356.0	24.0

subject to alterations

(1) When used with M4Q045-EF, blade angles up to 34° are possible

Mounting bracket

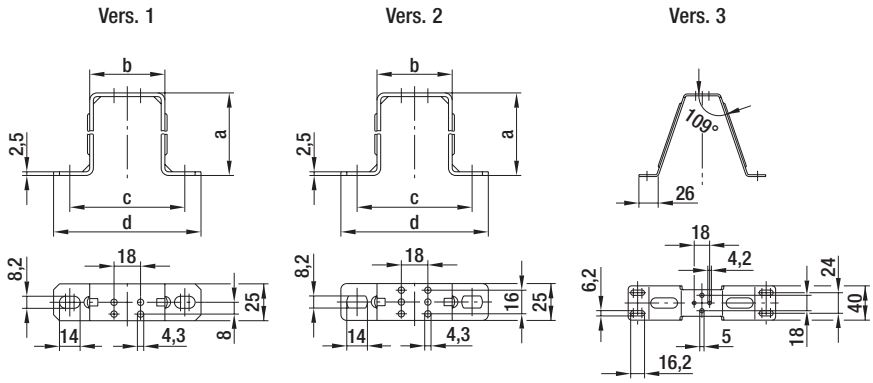

– **Material:** Sheet steel, galvanized and blue chromated

Mounting bracket for Q-motors (foot measure 18 mm)

Part no.	Size	Vers.	a	b	c	d	Suitable Q-motor
51025-2-4053	172	1	56.0	51.0	78.0	100.0	M4Q045-BD01-**
51028-2-4053	200	1	67.0	51.0	78.0	100.0	M4Q045-BD01-**, M4Q045-CA01-**
51026-2-4053	230	1	74.5	51.0	78.0	100.0	M4Q045-CA01-**, M4Q045-CA03-**
51027-2-4053	254	2	85.5	51.0	78.0	100.0	M4Q045-CA03-**, M4Q045-CF01-**, M4Q045-DA01-**
51014-2-4053	300	3	112.0	—	150.0	172.0	M4Q045-DA01-**, M4Q045-DA05-**, M4Q045-EA01-**, M4Q045-EF01-**

subject to alterations

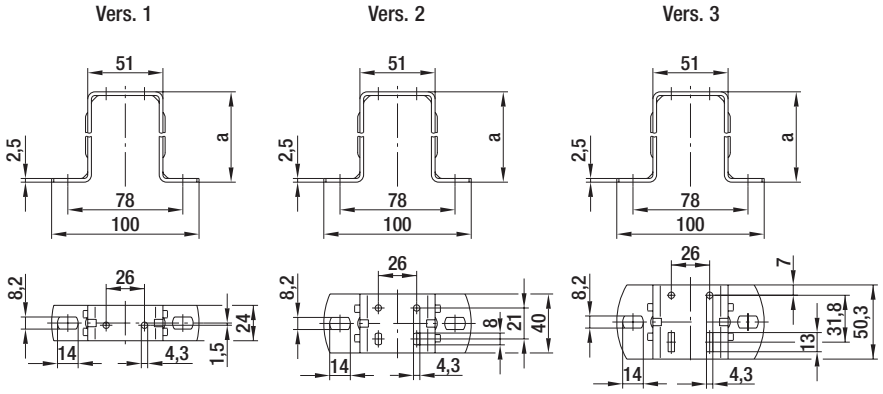

– **Material:** Sheet steel, galvanized and blue chromated

Mounting bracket for Q-motors (foot measure 26 mm)

Part no.	Size	Vers.	a	Suitable Q-motor
71881-2-4053	154	1	39.0	M4Q045-BD01-**
71882-2-4053	172	1	52.0	M4Q045-BD01-**
71883-2-4053	200	1	72.0	M4Q045-BD01-**, M4Q045-CA01-**
	230	1	72.0	M4Q045-CA01-**, M4Q045-CA03-**
71884-2-4053	254	1	84.0	M4Q045-CA03-**, M4Q045-CF01-**
71885-2-4053	254	2	84.0	M4Q045-DA01-**
71886-2-4053	300	2	109.0	M4Q045-DA01-**, M4Q045-DA05-**
71887-2-4053	300	3	109.0	M4Q045-EA01-**, M4Q045-EF01-**

subject to alterations

Mounting angles, terminal boxes

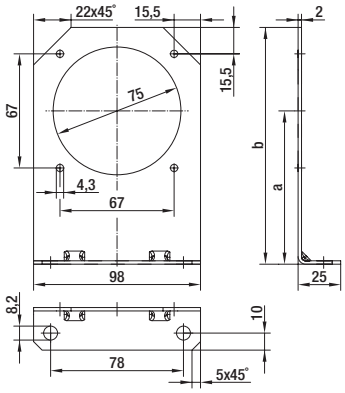

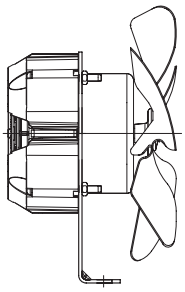

– **Material:** Sheet steel, hot-galvanised

Mounting angle for energy-saving motors (ESM)

Part no.	Size	Max. blade angle α at "V"	Max. blade angle α at "A"	a	b
63500-2-4060	154 / 172	34°	34°	103.0	152.0
63501-2-4060	200	34°	28°	123.0	172.0
63502-2-4060	230 / 254	28°	28°	135.0	184.0

subject to alterations

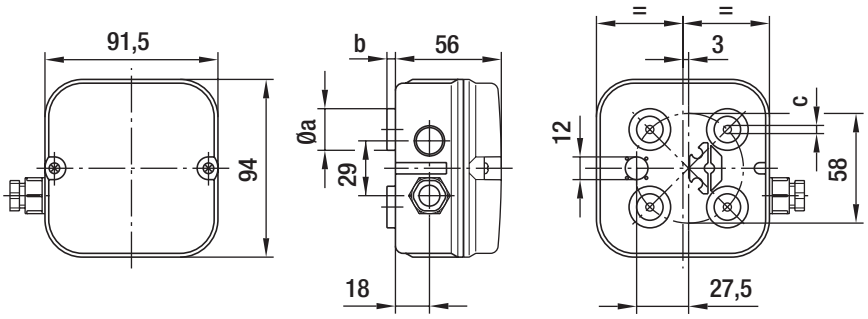

– **Material:** ABS
– **Description:** Two-piece terminal box for AC motors of size 068 or 074, terminal strip with 4- or 7-pole.
Suitable for installation of capacitor with 10 µF max.
– **Type of protection:** IP 54

Terminal box

Part no.	AC motor	a	b	c
64442-1-7612	068 (4 poles)	22.0	5.0	4.3
64444-1-7612	068 (7 poles)	22.0	5.0	4.3
64443-1-7612	074 (4 poles)	12x14.5	10.5	5.5
64445-1-7612	074 (7 poles)	12x14.5	10.5	5.5

subject to alterations

Capacitors

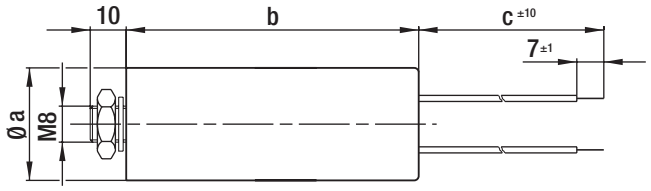

- **Material:** Housing made of thermoplastic resin
- **Connection line:** Multi-lead PVC cable 0.5 mm² with brass lead tips
- **Approval:** VDE according to DIN EN 60252 (VDE 0560/8)
- **Calculated life time:**
  400 V; -25 to +85°C; 30,000 hrs; class A
  450 V; -25 to +85°C; 10,000 hrs; class B

MKP motor capacitors (without fuse)

Part no.	Capacity	a	b (max.)	c
02100-4-7320	1.0 µF	25-28	58.0	235.0
99282-4-7320	1.5 µF	25-28	58.0	235.0
99283-4-7320	2.0 µF	25-28	58.0	235.0
02103-4-7320	2.5 µF	25-28	70.0	235.0
68462-4-7320	3.0 µF	25-28	70.0	235.0
99284-4-7320	4.0 µF	28-32	58.0	235.0
02101-4-7320	5.0 µF	30-36	70.0	235.0
99285-4-7320	6.0 µF	30-36	70.0	235.0
66788-4-7320	7.0 µF	30-36	72.0	100.0
99286-4-7320	8.0 µF	35-40	72.0	235.0
99287-4-7320	10.0 µF	35-40	72.0	200.0
66786-4-7320	12.0 µF	40.0	72.0	100.0
30457-4-7320	14.0 µF	40-45	92.0	150.0
50090-4-7320	16.0 µF	35-40	95.0	100.0
90034-4-7320	20.0 µF	40.0	95.0	235.0
90025-4-7320	25.0 µF	40.0	120.0	235.0

subject to alterations

Capacitors

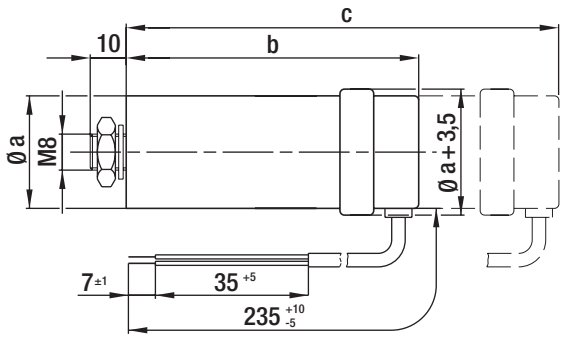

- **Material:** Plastic cap, aluminium cup
- **Designation:** FPU or P2 according to IEC 252 (non-flammable, non-explosive, circuit-breaking)
- **Approval:** VDE according to DIN EN 60252 (VDE 0560/8)
- **Calculated life time:**
  420 V; -25 to +85°C; 30,000 hrs; class A
  470 V; -25 to +85°C; 10,000 hrs; class B
  500 V; -25 to +85°C; 3,000 hrs; class C

MKP motor capacitors FPU or P2 (with fuse)

Part no.	Capacity	a	b (max.)	c (max.)
02151-4-7320	1.0 µF	25-30	77.0	92.0
02155-4-7320	1.5 µF	25.0	77.0	92.0
02156-4-7320	2.0 µF	25.0	77.0	92.0
02159-4-7320	2.5 µF	30.0	71.0	92.0
02160-4-7320	3.0 µF	30.0	71.0	92.0
02161-4-7320	4.0 µF	25-30	104.0	135.0
02162-4-7320	5.0 µF	25-30	104.0	113.0
02163-4-7320	6.0 µF	30.0	101.0	110.0
02164-4-7320	7.0 µF	30-35	101.0	110.0
02165-4-7320	8.0 µF	30-35	102.0	111.0
02166-4-7320	10.0 µF	35.0	96.0	110.0
02167-4-7320	12.0 µF	35.0	96.0	110.0
90026-4-7320	14.0 µF	40.0	130.0	139.0
02168-4-7320	16.0 µF	40.0	96.0	130.0
02169-4-7320	20.0 µF	40.0	116.0	130.0
02170-4-7320	25.0 µF	40-45	116.0	130.0

subject to alterations

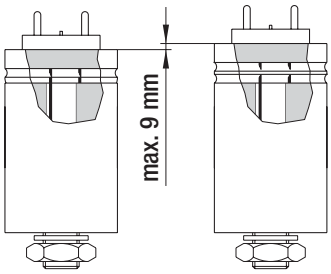

- **Pull-off protector:** The housing expands by max. 9 mm. The protector responds to overload by the generated excess pressure snapping off the internal lead in a predetermined breaking point.
- **Mounting:** c is the overall dimension of the capacitor which has to be taken into account when mounting the part. The capacitor design, however, depends on the manufacturer. The expansion (9 mm) is either added to dimension b, or it is already integrated in the capacitor.

Speed setting device, 3-phase (with 5 steps)

for wall assembly

- **Technical features:** Input for TOP
- **Voltage steps:** 3~ 400 / 280 / 230 / 180 / 140 VAC
- **Type of protection:** IP 20 (with vertical installation)

Nominal data		Nominal voltage	Frequency	Current draw	Mass
Type		**VAC**	**Hz**	**A**	**kg**
TCD 020-AA01 -05	3~	400	50/60	2.0	9.5
TCD 040-AA01 -05	3~	400	50/60	4.0	13.9
TCD 070-AA01 -05	3~	400	50/60	7.0	19.7

subject to alterations

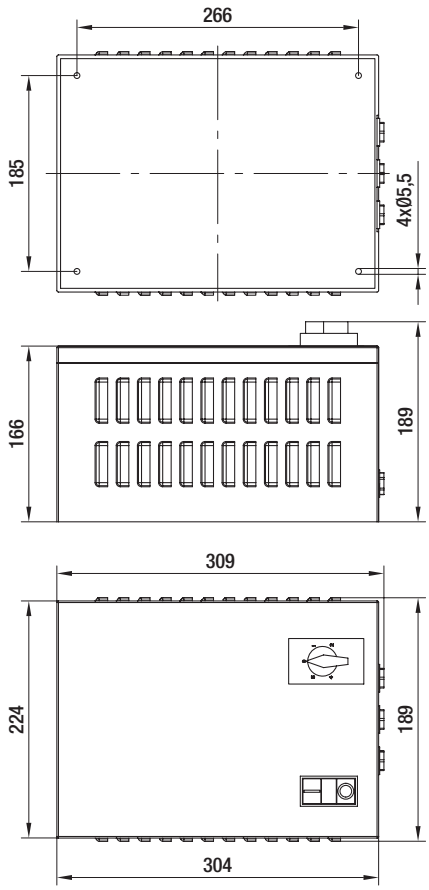

ebmpapst

Speed setting device, single-phase (with 5 steps)

for wall assembly

- **Technical features:** Input for TOP
- **Voltage steps:** 1~ 230 / 160 / 145 / 130 / 105 VAC
- **Type of protection:** IP 40

Nominal data		Nominal voltage	Frequency	Current draw	Mass
Type		**VAC**	**Hz**	**A**	**kg**
TCE 021-AA01 -05	1~	230	50/60	2.1	3.6
TCE 040-AA01 -05	1~	230	50/60	4.0	4.8
TCE 075-AA01 -05	1~	230	50/60	7.5	6.5

subject to alterations

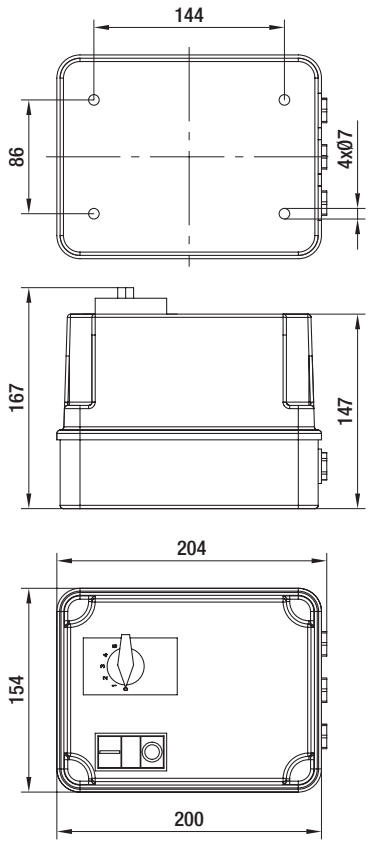

Motor protection switch, 3-phase

for assembly inside a cabinet

– **Technical features:** Input for TOP

Nominal data		Nominal voltage	Frequency	Current draw	Mass	
Type		**VAC**	**Hz**	**A**	**kg**	**Auxiliary contactor**
TPD 250-AB01 -01	3~	400	50/60	25.0	0.3	Without auxiliary contactor
TPD 250-AB01 -02	3~	400	50/60	25.0	0.3	With break contact
TPD 250-AB01 -03	3~	400	50/60	25.0	0.3	With make contact

subject to alterations

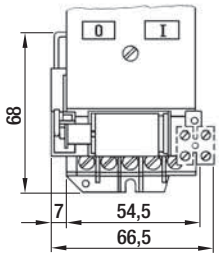

– **Electr. connection:**

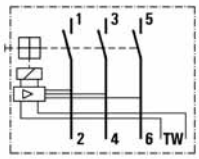

ebmpapst

Motor protection switch, single-phase

for assembly inside a cabinet

– **Technical features:** Input for TOP

Nominal data

Type		Nominal voltage VAC	Frequency Hz	Current draw A	Mass kg	Auxiliary contactor
TPE 100-AB01 -01	3~	230	50/60	10.0	0.3	Without auxiliary contactor
TPE 100-AB01 -02	3~	230	50/60	10.0	0.3	With break contact
TPE 100-AB01 -03	3~	230	50/60	10.0	0.3	With make contact

subject to alterations

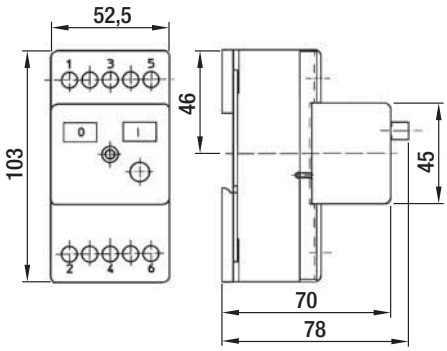

– **Electr. connection:**

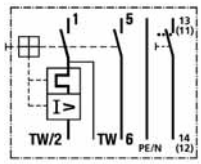

Motor-protection switch, single phase and three-phase

for wall assembly

- **Technical features:** Input for TOP
- **Type of protection:** IP 55

Nominal data		Nominal voltage	Frequency	Current draw	Mass	
Type		**VAC**	**Hz**	**A**	**kg**	**Auxiliary contactor**
TPD 250-AA01 -01	3~	400	50/60	25.0	0.6	Without auxiliary contactor
TPD 250-AA01 -02	3~	400	50/60	25.0	0.6	With break contact
TPD 250-AA01 -03	3~	400	50/60	25.0	0.6	With make contact
TPE 100-AA01 -01	1~	230	50/60	10.0	0.6	Without auxiliary contactor
TPE 100-AA01 -02	1~	230	50/60	10.0	0.6	With break contact
TPE 100-AA01 -03	1~	230	50/60	10.0	0.6	With make contact

subject to alterations

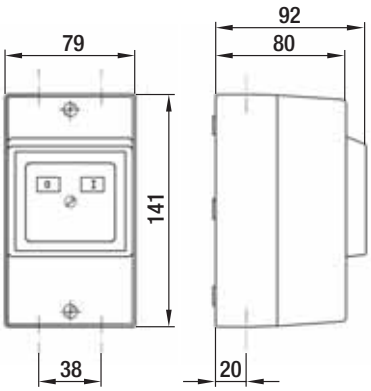

- **Electr. connection, three-phase:**

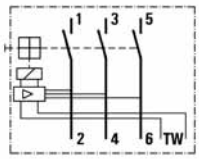

- **Electr. connection, single-phase:**

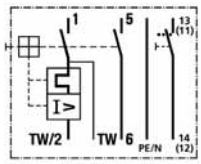

ebmpapst

Star-delta switch / repair switch

Third-party accessories from Möller Electric GmbH

for wall installation

For more information: www.moeller.net

Star-delta switch (available from Möller Electric GmbH)

Designation	Installation
T0-4-8410/I1	Wall installation
T0-4-8410/E	Cabinet installation

subject to alterations

for wall installation

For more information: www.moeller.net

Repair switch, lockable (available from Möller Electric GmbH)

Designation	Installation
T0-2-8900/I1/SVB-SW	Wall installation
T0-2-8900/EA/SVB-SW	Cabinet installation
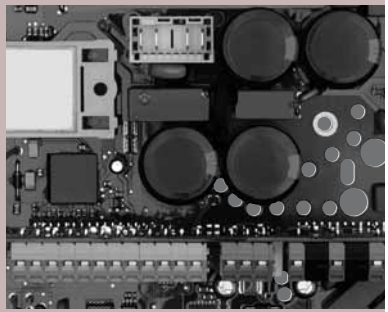
subject to alterations