2081679-1 ✔ ACTIVE

SMA

TE Internal #: 2081679-1

SMA Connector, Jack, 50 ohm, Screw, 6 GHz, Cable-to-Board, 1 Position, Printed Circuit Board, Board Mount, Right Angle, Brass, Plated, Gold, SMA

View on TE.com >

Connectors > RF Connectors > Coax Connectors

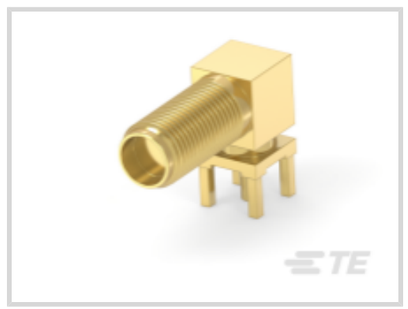
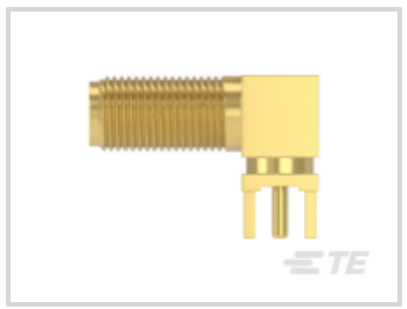




RF Interface: **SMA**

RF Connector Style: **Jack**

Impedance: **50 Ω**

RF Connector Coupling Mechanism: **Screw**

Operating Frequency Range: **6 GHz**

Features

Product Type Features

RF Interface	SMA
RF Connector Style	Jack
Connector System	Cable-to-Board
Sealable	No
Connector & Contact Terminates To	Printed Circuit Board

Configuration Features

PCB Mount Orientation	Right Angle
Number of Positions	1
Number of Coaxial Contacts	1

Electrical Characteristics

Impedance	50 Ω

Body Features

Body Underplating Material	Copper
Body Material	Brass

Body Material Finish	Plated
Body Plating Material	Gold

Contact Features

RF Connector Center Contact Plating Material	Gold (Au)
RF Connector Center Contact Material	Beryllium Copper

Mechanical Attachment

RF Connector Coupling Mechanism	Screw
Connector Mounting Type	Board Mount
RF Contact Captivation Method	Mechanical
Detent	Without

Housing Features

Body Orientation	Right Angle

Operation/Application

Circuit Application	Signal
Operating Frequency Range	6 GHz

Packaging Features

Packaging Method	Bag & Box

Other

Dielectric Material	Polytetrafluoroethylene (PTFE)

Product Compliance

For compliance documentation, visit the product page on TE.com>

EU RoHS Directive 2011/65/EU	Compliant with Exemptions
EU ELV Directive 2000/53/EC	Out of Scope
China RoHS 2 Directive MIIT Order No 32, 2016	有害物质含量超出标准 Restricted Substance(s) Above Threshold
EU REACH Regulation (EC) No. 1907/2006	Current ECHA Candidate List: JUNE 2025 (250) Candidate List Declared Against: JUNE 2025 (250) SVHC > Threshold: Pb (3.23% in Component) **Article Safe Usage Statements:** Do not eat, drink or smoke when using this product. Wash thoroughly after handling. Recycle if possible and dispose of the article by following all applicable governmental regulations relevant to your geographic location.
Halogen Content	Low Bromine/Chlorine - Br and Cl < 900

	ppm per homogenous material. Also BFR /CFR/PVC Free
Solder Process Capability	Not reviewed for solder process capability

Product Compliance Disclaimer

This information is provided based on reasonable inquiry of our suppliers and represents our current actual knowledge based on the information they provided. This information is subject to change. The part numbers that TE has identified as EU RoHS compliant have a maximum concentration of 0.1% by weight in homogenous materials for lead, hexavalent chromium, mercury, PBB, PBDE, DBP, BBP, DEHP, DIBP, and 0.01% for cadmium, or qualify for an exemption to these limits as defined in the Annexes of Directive 2011/65/EU (RoHS2). Finished electrical and electronic equipment products will be CE marked as required by Directive 2011/65/EU. Components may not be CE marked.Additionally, the part numbers that TE has identified as EU ELV compliant have a maximum concentration of 0.1% by weight in homogenous materials for lead, hexavalent chromium, and mercury, and 0.01% for cadmium, or qualify for an exemption to these limits as defined in the Annexes of Directive 2000/53/EC (ELV). Regarding the REACH Regulations, TE's information on SVHC in articles for this part number is still based on the European Chemical Agency (ECHA) 'Guidance on requirements for substances in articles'(Version: 2, April 2011), applying the 0.1% weight on weight concentration threshold at the finished product level. TE is aware of the European Court of Justice ruling of September 10th, 2015 also known as O5A (Once An Article Always An Article) stating that, in case of 'complex object', the threshold for a SVHC must be applied to both the product as a whole and simultaneously to each of the articles forming part of its composition. TE has evaluated this ruling based on the new ECHA "Guidance on requirements for substances in articles" (June 2017, version 4.0) and will be updating its statements accordingly.

Compatible Parts



TE Part # 2081884-1
EP-SMA,PLUG,27GHZ,STRAIGHT,086 CABLE

Also in the Series | SMA

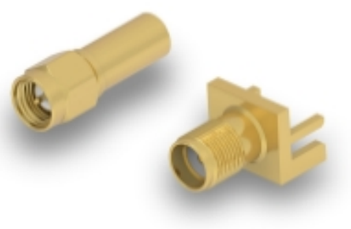

SMA RF Connectors(197)

Customers Also Bought



TE Part #ADP-BNCF-BNCF-B
BNC Jack to BNC Jack Bulkhead



TE Part #M3041-000005-01KPG
PRESS XDCR M3041-000005-01KPG



TE Part #31090
BODY R 22-16 COMM 22-18 MIL 5

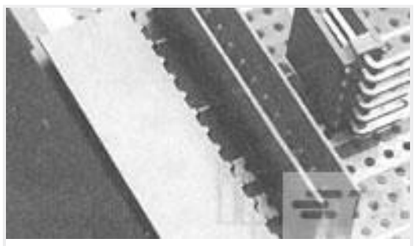

TE Part #281698-3
HEADER HE14 RA 3 P

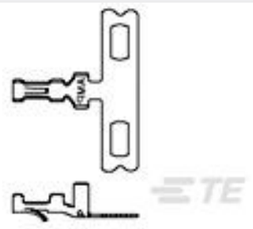

TE Part #3-640401-1
MINI AMP-IN 26-22 SN/PHBZ



TE Part #6-1879212-5
CPF 0402 10R2 0.1% 25PPM 1K RL



TE Part #9-1879212-4
CPF 0402 22R6 0.1% 25PPM 1K RL



TE Part #4-1879214-7
CPF 0402 1K02 0.1% 25PPM 1K RL



TE Part #2271195-1
RPC-M12X-FF-8CON-M16-LAU



TE Part #2311776-1
AMPL PLUG, HD22, R/A, 26P, THREADED

Documents

Product Drawings

SMA JACK RECEPTACLE,PCB,RIGHT ANGLE,6GHZ

English

CAD Files

3D PDF

3D

Customer View Model

ENG_CVM_CVM_2081679-1_1.2d_dxf.zip

English

Customer View Model

ENG_CVM_CVM_2081679-1_1.3d_igs.zip

English

Customer View Model

ENG_CVM_CVM_2081679-1_1.3d_stp.zip

English

By downloading the CAD file I accept and agree to the Terms and Conditions of use.