

EXAMPLE:

PN 2058272081
205827 - SERIES NUMBER: SINGLE ROW RECEPTACLE
2 - TYPE OF COMPONENT: STANDARD MATL RECPT
06 - 06 USABLE CIRCUITS
1 - KEY A

FINAL PART: 06CKT SINGLE ROW RECEPTACLE - KEY A

6 WAY RECEPTACLE SHOWN

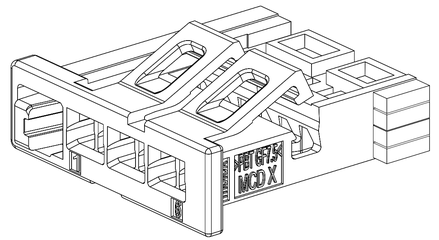

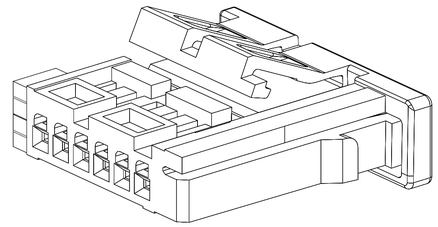

	SERIES NUMBERS (AAAAAA)	TYPE OF COMPONENT (B)	USABLE CIRCUITS (CC)	KEY (D)
ON DRAWING	205827 - TANG RECEPTACLE	2 - STANDARD MATERIAL	02 - 2 Circuits ... ... 22 - 22 Circuits	0 - No KEY or N/A 1 - KEY A 2 - KEY B 3 - KEY C 4 - KEY D
MATING PARTS	208033 - RIGHT ANGLE SMT HEADER - TAPE & REEL			
	208034 - RIGHT ANGLE SMT HIGH PERFORMANCE HEADER - TAPE & REEL			
	208035 - VERTICAL SMT HEADER - TAPE & REEL			
	208036 - VERTICAL SMT HIGH PERFORMANCE HEADER - TAPE & REEL			

INTERFACE	INTERFACE CKT SIZE	DIM A	DIM B	KEY	COLOR	RECEPTACLE P/N	WEIGHT (g)	PART STATUS
	2	10.40	7.75	A	BLACK	2058272021	0.41	AVAILABLE
				B	NATURAL	2058272022	0.41	
				C	BLUE	2058272023	0.41	
				D	VIOLET	2058272024	0.41	
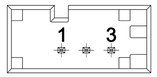	3	12.20	9.55	A	BLACK	2058272031	0.51	AVAILABLE
				B	NATURAL	2058272032	0.51	
				C	BLUE	2058272033	0.51	
				D	VIOLET	2058272034	0.51	
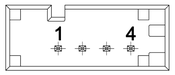	4	14.00	11.35	A	BLACK	2058272041	0.60	AVAILABLE
				B	NATURAL	2058272042	0.60	
				C	BLUE	2058272043	0.60	
				D	VIOLET	2058272044	0.60	
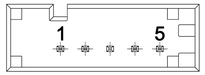	5	15.80	13.15	A	BLACK	2058272051	0.69	AVAILABLE
				B	NATURAL	2058272052	0.69	
				C	BLUE	2058272053	0.69	
				D	VIOLET	2058272054	0.69	
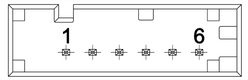	6	17.60	14.95	A	BLACK	2058272061	0.78	AVAILABLE
				B	NATURAL	2058272062	0.78	
				C	BLUE	2058272063	0.78	
				D	VIOLET	2058272064	0.78	
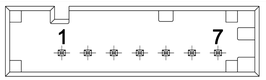	7	19.40	16.75	A	BLACK	2058272071	-	INQUIRE FOR AVAILABILITY
				B	NATURAL	2058272072	-	
				C	BLUE	2058272073	-	
				D	VIOLET	2058272074	-	
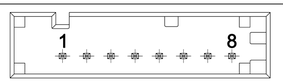	8	21.20	18.55	A	BLACK	2058272081	-	INQUIRE FOR AVAILABILITY
				B	NATURAL	2058272082	-	
				C	BLUE	2058272083	-	
				D	VIOLET	2058272084	-	
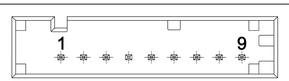	9	23.00	20.35	A	BLACK	2058272091	-	INQUIRE FOR AVAILABILITY
				B	NATURAL	2058272092	-	
				C	BLUE	2058272093	-	
				D	VIOLET	2058272094	-	
	10	24.80	22.15	A	BLACK	2058272101	-	INQUIRE FOR AVAILABILITY
				B	NATURAL	2058272102	-	
				C	BLUE	2058272103	-	
				D	VIOLET	2058272104	-	
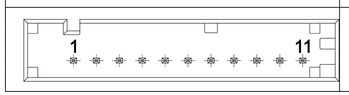	11	26.60	23.95	A	BLACK	2058272111	-	INQUIRE FOR AVAILABILITY
				B	NATURAL	2058272112	-	
				C	BLUE	2058272113	-	
				D	VIOLET	2058272114	-	

NOTES

VALID UNLESS OTHERWISE SPECIFIED

1. GENERAL:
   - 1.1 APPLICATION SPECIFICATION SEE: 2046310000-AS
   - 1.2 PRODUCT SPECIFICATION SEE: 2046310000-PS
   - 1.3 PACKAGING SPECIFICATION PER MOLEX DRAWING: PK-31301-538
   - 1.4 COMPATIBLE WITH STANDARD AK INTERFACE TO DRAWING C-114-94000-20 REV B1
   - 1.5 COMPATIBLE WITH MOLEX AK INTERFACE 2046310001
2. DESIGN - MATERIALS:
   - 2.1 RECEPTACLE HOUSING:
     - a. MATERIAL: PBT-GF7.5%
     - b. COLOR: SEE PART TABLE
3. DESIGN - GEOMETRY:
   - 3.1 GEOMETRIC DIMENSIONS AND TOLERANCES PER ASME Y14.5M-2009
   - 3.2 EDGES AND UNDIMENSIONED DETAILS PER ISO13715
   - 3.3 CORNERS SHOWN AS SHARP TO BE R 0.2 MAX.
   - 3.4 MARKED TEXT TO INCLUDE:
     RECYCLING CODE, CAVITY ID, AND VENDOR IDENTIFICATION.

INSPECETION BALLOON NUMBER LOG

PER DRAWING REVISION: A4

LAST BALLOON USED: 17

ADDED BALLOON NUMBERS:

REMOVED BALLOON NUMBERS:

REV	DESCRIPTION
A4	REMOVED PREVIOUS NOTE 1.4 & 1.5; CORRECTED DRAWING REVISION IN NOTE 1.4; ADDED NOTE 1.5; REMOVED KEY Z; UPDATED SCALE OF SHEET 2
A3	CHANGED POL B COLOR FROM GRAY TO NATURAL
A2	CHANGED DIM A DIMENSIONS
A1	ADDED DIMENSION BALLOONS UPDATED TOERLANCE FOR DIM 3
A	INITIAL RELEASE

THIS DRAWING CONTAINS INFORMATION THAT IS PROPRIETARY TO MOLEX ELECTRONIC TECHNOLOGIES, LLC AND SHOULD NOT BE USED WITHOUT WRITTEN PERMISSION

FUNCTIONAL SYMBOLS
FA = 0
FC = 0
FP = 0
DIVISIONAL SYMBOLS

DIMENSION UNITS: MM
SCALE: 6:1

GENERAL TOLERANCES (UNLESS SPECIFIED)

ANGULAR TOL	± 0.5"
4 PLACES	±
3 PLACES	±
2 PLACES	±
1 PLACE	±
0 PLACES	±

DRAFT WHERE APPLICABLE MUST REMAIN WITHIN DIMENSIONS

CURRENT REV DESC: Weight Column added to BOM Table

STATUS: Production
DRWN: Evan Colarusso 2022-05-27
CHK'D: Skyler Russ 2025-02-11
APPR: Jeremy Dunaj 2025-02-11

molex

CONNTAK50 SR TNG RECEPTACLE SALES DWG

PRODUCT CUSTOMER DRAWING

DOCUMENT NUMBER	DOC TYPE	DOC PART	REVISION
2058270002	PSD	000	A4

THIRD ANGLE PROJECTION | DRAWING: D-SIZE | SERIES: 205827 | MATERIAL NUMBER: SEE TABLE | CUSTOMER: GENERAL MARKET | SHEET NUMBER: 1 OF 2

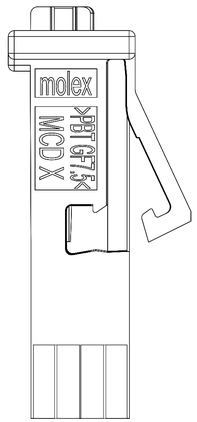

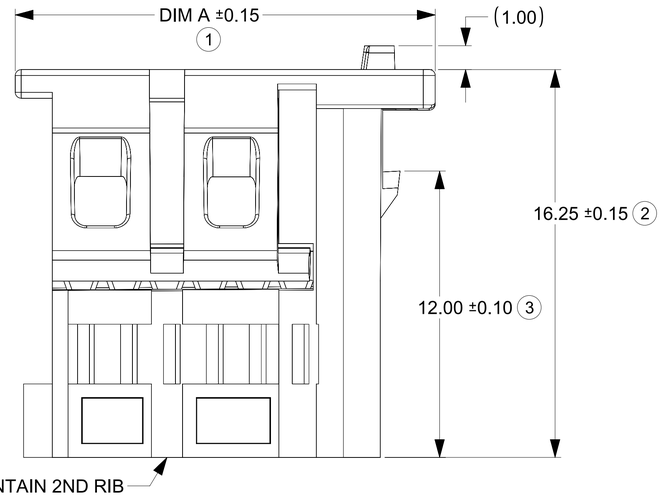

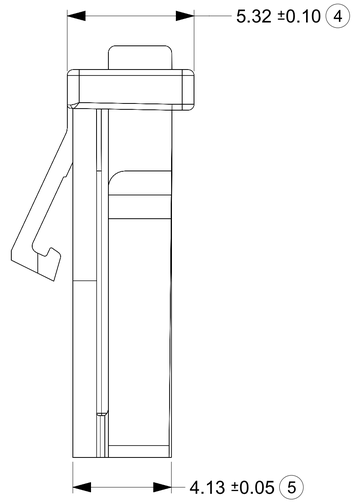

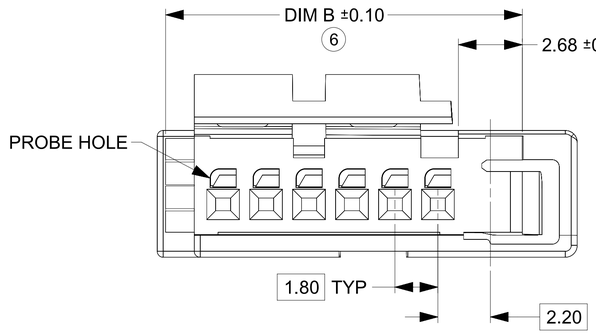

KEYING OPTIONS

KEY A
(BLACK)

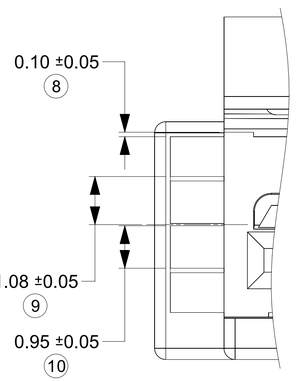

KEY B
(GREY)

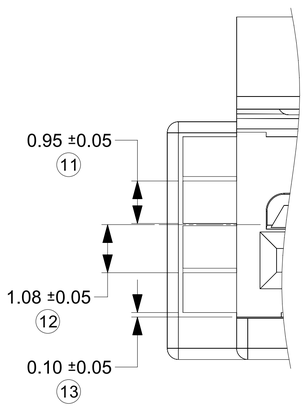

KEY C
(BLUE)

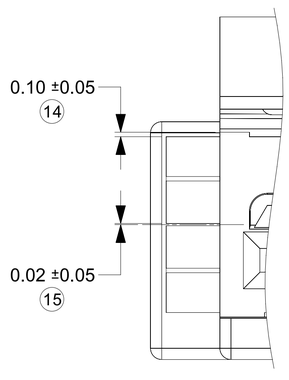

KEY D
(VIOLET)

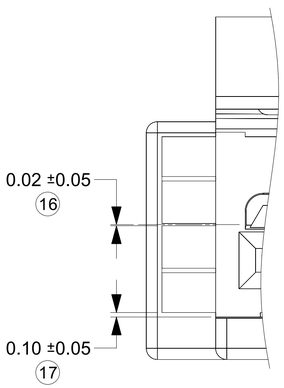

ISL IN FINAL LOCK

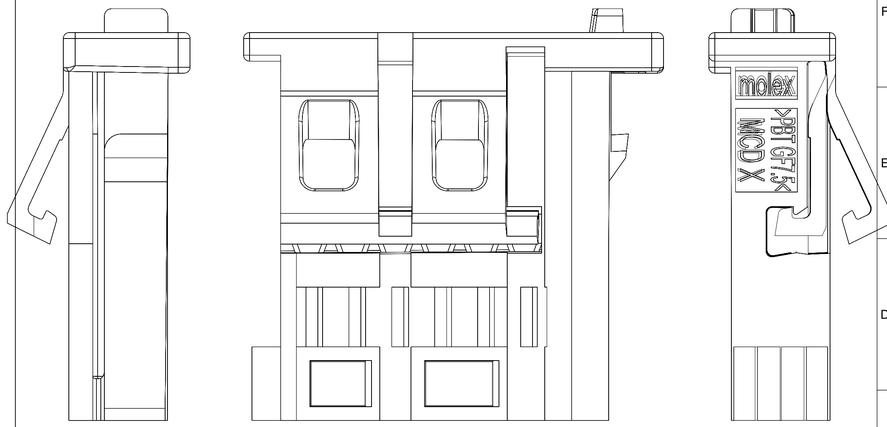

THIS DRAWING CONTAINS INFORMATION THAT IS PROPRIETARY TO MOLEX ELECTRONIC TECHNOLOGIES, LLC AND SHOULD NOT BE USED WITHOUT WRITTEN PERMISSION

FUNCTIONAL SYMBOLS
FA = 0
FC = 0
FP = 0

DIVISIONAL SYMBOLS

DIMENSION UNITS: MM
SCALE: 8:1

GENERAL TOLERANCES (UNLESS SPECIFIED)

ANGULAR TOL	± 0.5°
4 PLACES	±
3 PLACES	±
2 PLACES	±
1 PLACE	±
0 PLACES	±

DRAFT WHERE APPLICABLE MUST REMAIN WITHIN DIMENSIONS

CURRENT REV DESC: Weight Column added to BOM Table

STATUS: Production
DRWN: Evan Colarusso 2022-05-27
CHK'D: Skyler Russ 2025-02-11
APPR: Jeremy Dunaj 2025-02-11

THIRD ANGLE PROJECTION

DRAWING	SERIES
D-SIZE	205827

molex

CONNTAK50 SR TNG RECEPTACLE SALES DWG

PRODUCT CUSTOMER DRAWING

DOCUMENT NUMBER	DOC TYPE	DOC PART	REVISION
2058270002	PSD	000	A4

MATERIAL NUMBER	CUSTOMER	SHEET NUMBER
SEE TABLE	GENERAL MARKET	2 OF 2