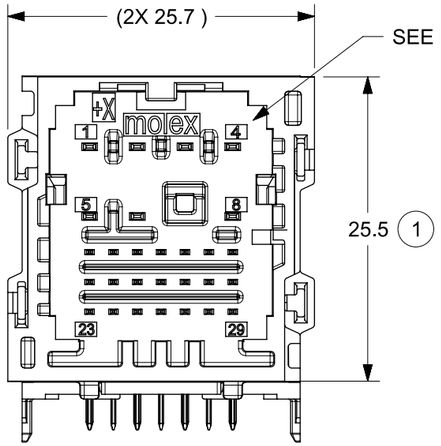

KEY 1
PART NO. 2005020281

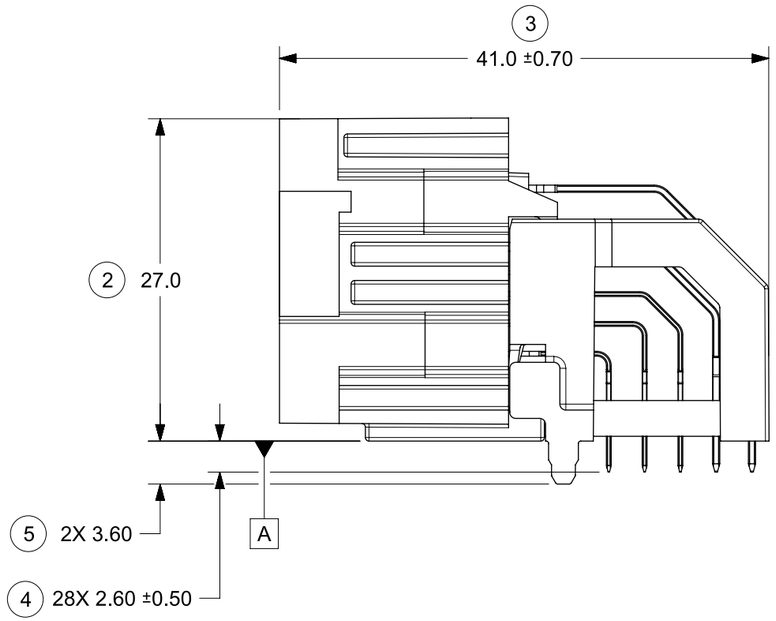

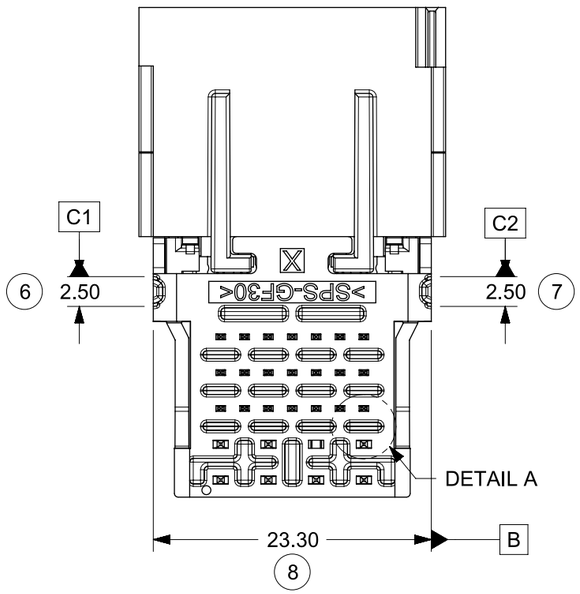

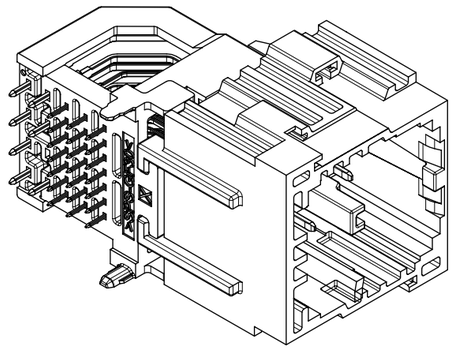

PART NUMBER TUBE PACKAGING 2005028100	PART NUMBER TRAY PACKAGING 2005062105-PK	KEY	COLOR	TERMINAL QUANTITIES	
				0.5mm	1.2mm
2005020281	2005021281	1	DARK GRAY	21	7
2005020282	2005021282	2	GREEN		
2005020283	2005021283	3	GRAY		
2005020284	2005021284	4	BLACK		

FOUR (4) KEYS AVAILABLE
SEE INTERFACE DRAWING
SD-160014-002 FOR DEFINITION

NOTES: VALID UNLESS OTHERWISE SPECIFIED
1. GENERAL:
a. APPLICATION SPECIFICATION: 2005060000-AS
b. PRODUCT SPECIFICATION: 2005060001-PS
(D2) CLASSIFICATIONS T2V1S1 TO GMW 3191 2012
DEGREE OF PROTECTION IP40 TO ISO 20653 WITH MOLEX MATING CONNECTOR
c. PACKAGING SPECIFICATION PER MOLEX DRAWING

2. DESIGN - MATERIALS:
a. HOUSING: SPS 30% GF
(D2) b. BLADE TERMINALS:
1. 0.5MM BLADES
BASE MATERIAL: COPPER ALLOY
UNDERPLATE: OVERALL NICKEL
OVERPLATE: OVERALL TIN
2. 1.2MM BLADES
BASE MATERIAL: COPPER ALLOY
UNDERPLATE: OVERALL NICKEL
OVERPLATE: OVERALL TIN

3. DESIGN - GEOMETRY:
a. ALL GRAPHIC DATA IS BASIC (NO TOLERANCE) AND MUST BE TAKEN FROM THE DATA FILE AT ITS LATEST REVISION.
b. PRODUCT DESIGN MODEL NUMBER 2005020280
c. GEOMETRIC DIMENSIONS AND TOLERANCES PER ASME Y14.5-2009
d. EDGES AND UNDIMENSIONED DETAILS PER ISO13715
e. CORNERS SHOWN AS SHARP TO BE R 0.4 MAX.
f. LETTERING SHALL BE MAX POSSIBLE FOR READABILITY. THIS INCLUDES RECYCLING CODE, CAVITY ID, VENDOR IDENTIFICATION, AND CUSTOMER MATERIAL NUMBER.
g. FOR BAY/POCKET DEFINITION SEE MOLEX INTERFACE DRAWING SD-160014-002
h. MATING HARNESS CONNECTORS MOLEX PN:
1600140011 (KEY 1)
1600140012 (KEY 2)
1600140013 (KEY 3)
1600140014 (KEY 4)

4. DESIGN - MANUFACTURING:
a. VISUAL DEFECTS SHALL MEET COSMETIC STANDARD PS-45499-002 (CLASS B)
b. REFLOW SOLDERABILITY PER SMES-152

SEE SHEET 2

REVISION	DESCRIPTION

THIS DRAWING CONTAINS INFORMATION THAT IS PROPRIETARY TO MOLEX ELECTRONIC TECHNOLOGIES, LLC AND SHOULD NOT BE USED WITHOUT WRITTEN PERMISSION

FUNCTIONAL SYMBOLS
FA = 0
FC = 0
FP = 0
DIVISIONAL SYMBOLS

DIMENSION UNITS: MM
SCALE: 2:1

GENERAL TOLERANCES (UNLESS SPECIFIED)

ANGULAR TOL	± °
4 PLACES	±
3 PLACES	±
2 PLACES	± 0.130
1 PLACE	± 0.25
0 PLACES	±

DRAFT WHERE APPLICABLE MUST REMAIN WITHIN DIMENSIONS

CURRENT REV DESC: SEE REVISION TABLE

STATUS: Production
DRWN: Yann Chen 2025-03-05
CHK'D: Nick Wang 2025-03-07
APPR: Ringo Hu 2025-03-07

THIRD ANGLE PROJECTION
DRAWING: B-SIZE
SERIES: 200502

molex

STAK50H MOD HDR 28 RA SINGLE BAY ASM

PRODUCT CUSTOMER DRAWING

DOCUMENT NUMBER	DOC TYPE	DOC PART	REVISION
2005021280SD	PSD	000	D2

MATERIAL NUMBER	CUSTOMER	SHEET NUMBER
SEE TABLE		1 OF 2

FORMAT: TC-B-prod
REVISION: B
DATE: 2022/08/01

RECOMMENDED MODULE OPENING
TO PASS ISO 20653 IP40

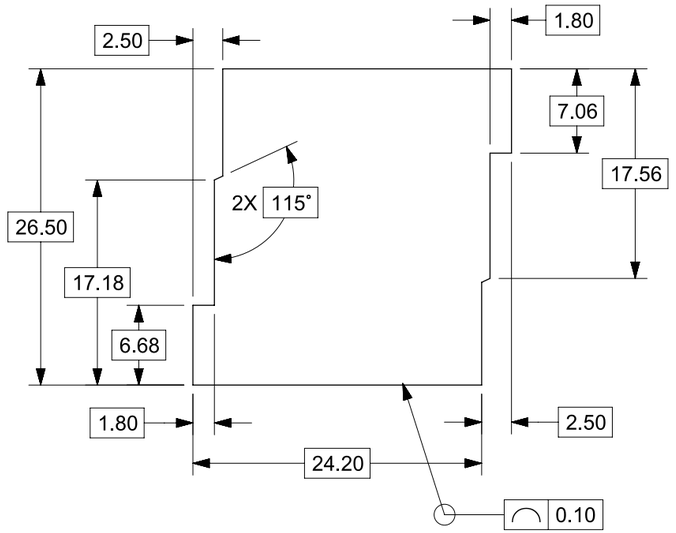

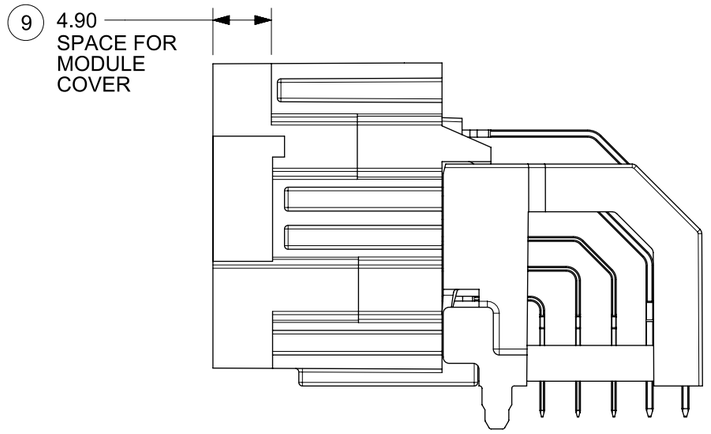

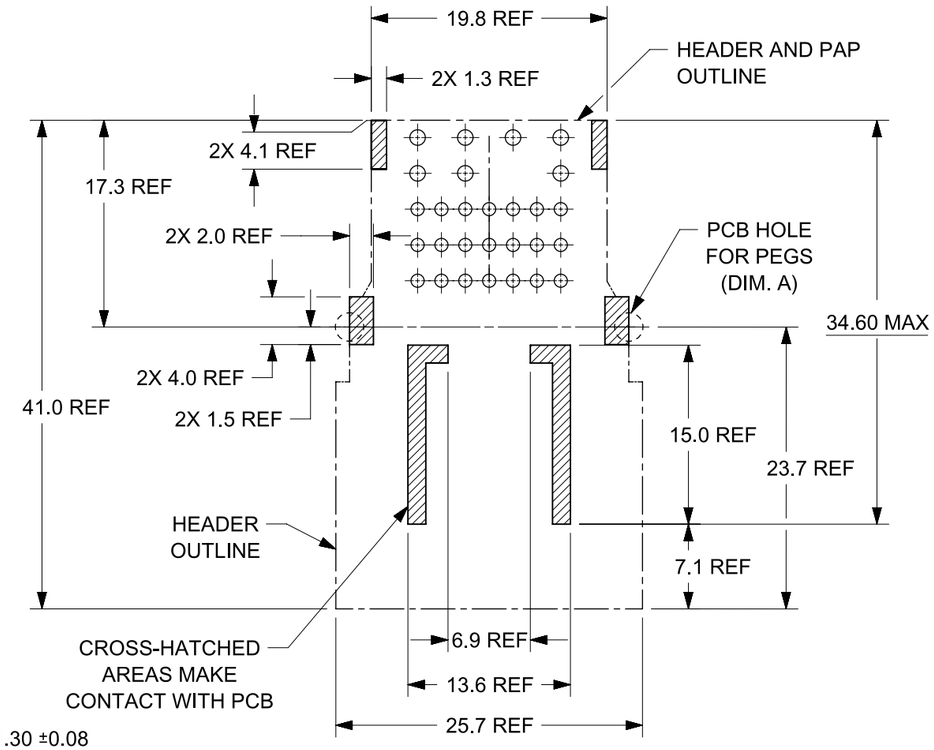

HEADER OUTLINE AND
PCB - HEADER CONTACT AREAS
FOR REFERENCE ONLY

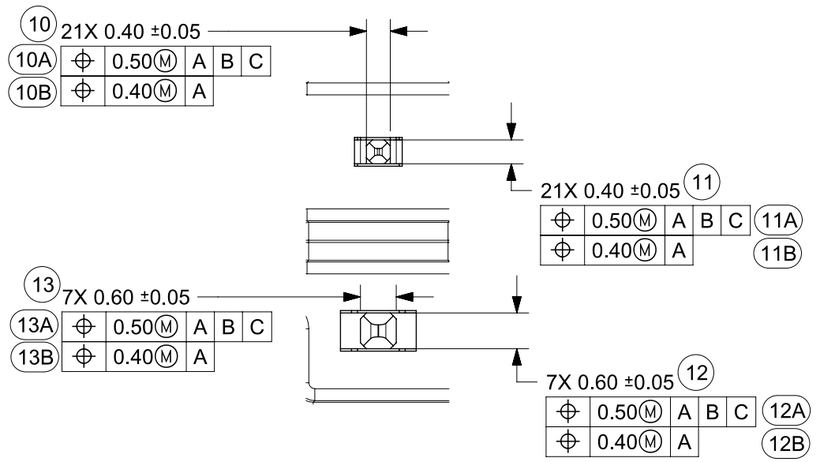

DETAIL A
SCALE 10:1

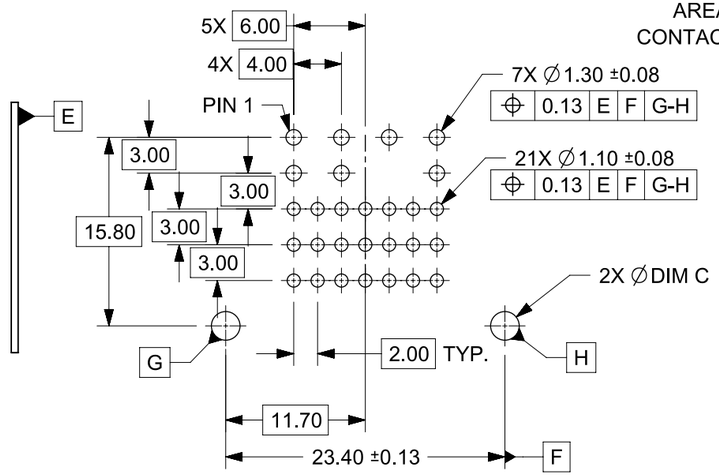

PCB LAYOUT
FOR REFERENCE

POST HOLE FIT	DIM C
PRESS FIT	2.40±0.08
DROP IN	2.90 MIN

REVISION	DESCRIPTION
D2	NOTES 1.B AND 2.B UPDATED
D1	TITLE BLOCK UPDATE
D	UPDATED THE PACKAGING DETAILS
C2	ADDED PCB HOLE DIMENSIONAL & POSITIONAL TOLERANCE 02-APRIL-2020 YPENG47 ECN:635042

THIS DRAWING CONTAINS INFORMATION THAT IS PROPRIETARY TO MOLEX ELECTRONIC TECHNOLOGIES, LLC AND SHOULD NOT BE USED WITHOUT WRITTEN PERMISSION

FUNCTIONAL SYMBOLS
FA = 0
FC = 0
FP = 0
DIVISIONAL SYMBOLS

DIMENSION UNITS: MM
SCALE: 1:1
GENERAL TOLERANCES (UNLESS SPECIFIED)
ANGULAR TOL ± °
4 PLACES ±
3 PLACES ±
2 PLACES ± 0.130
1 PLACE ± 0.25
0 PLACES ±
DRAFT WHERE APPLICABLE MUST REMAIN WITHIN DIMENSIONS

CURRENT REV DESC: SEE REVISION TABLE

STATUS: Production
DRWN: Yann Chen 2025-03-05
CHK'D: Nick Wang 2025-03-07
APPR: Ringo Hu 2025-03-07

THIRD ANGLE PROJECTION
DRAWING: B-SIZE
SERIES: 200502

molex

STAK50H MOD HDR 28 RA SINGLE BAY ASM

PRODUCT CUSTOMER DRAWING

DOCUMENT NUMBER	DOC TYPE	DOC PART	REVISION
2005021280SD	PSD	000	D2

MATERIAL NUMBER: SEE TABLE
CUSTOMER:
SHEET NUMBER: 2 OF 2

FORMAT: TC-db-prod-B
REVISION: B
DATE: 2022/08/01