2-2377481-1 ✔ ACTIVE

AMP | Heavy Duty Sealed Connector Series

TE Internal #: 2-2377481-1

Vertical, Wire-to-Board, 18 Position, 2 Row, Silver (Ag), Sealable, Printed Circuit Board, Signal, Gray, Heavy Duty Sealed Connector Series

View on TE.com >

Automotive Parts > Automotive Connectors > Automotive Headers > Heavy Duty Sealed Connector Headers

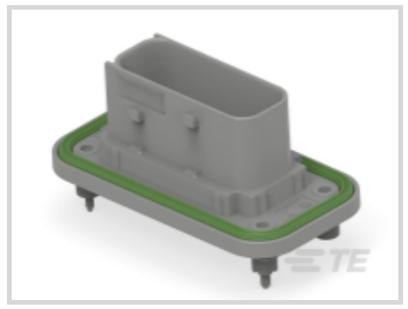
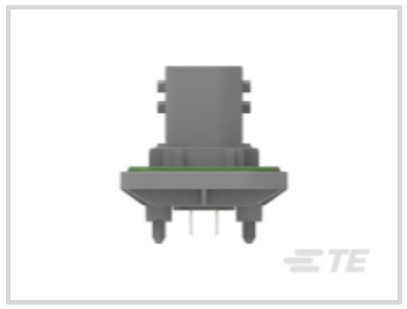

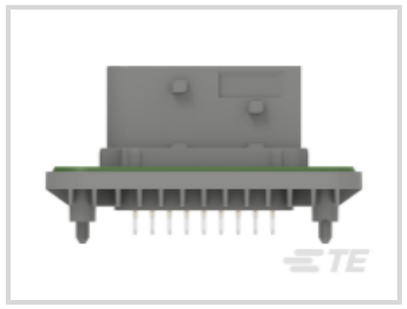
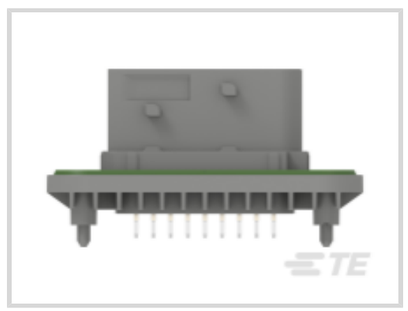

PCB Mount Orientation: **Vertical**

Termination Method to PCB: **Through Hole - Solder**

Sealable: **Yes**

Connector System: **Wire-to-Board**

Number of Positions: **18**

All Heavy Duty Sealed Connector Headers (23)

Features

Product Type Features

Header Type	Fully Shrouded
Connector Product Type	Connector Assembly
Sealable	Yes
Connector System	Wire-to-Board
Connector & Contact Terminates To	Printed Circuit Board

Configuration Features

PCB Mount Orientation	Vertical
Number of Positions	18
Number of Rows	2

Body Features

Connector & Keying Code	B
Primary Product Color	Gray

Contact Features

Contact Type	Tab
Contact Mating Area Plating Material	Silver (Ag)

Termination Features

Termination Method to PCB	Through Hole - Solder

Mechanical Attachment

Mating Alignment	With
PCB Mount Alignment	With
PCB Mount Retention	With
Connector Mounting Type	Panel Mount

Usage Conditions

Operating Temperature (Max)	140 °C[284 °F]
Operating Temperature Range	-40 – 140 °C[-40 – 284 °F]

Operation/Application

Circuit Application	Signal

Industry Standards

UL Flammability Rating	UL 94V-0

Packaging Features

Packaging Method	Package
Packaging Quantity	1

Product Compliance

For compliance documentation, visit the product page on TE.com>

EU RoHS Directive 2011/65/EU	Compliant
EU ELV Directive 2000/53/EC	Compliant
China RoHS 2 Directive MIIT Order No 32, 2016	有害物质含量符合标准要求 No Restricted Substance(s) Above Threshold
EU REACH Regulation (EC) No. 1907/2006	Current ECHA Candidate List: JUNE 2025 (250) Candidate List Declared Against: JUNE 2025 (250) Does not contain REACH SVHC
Halogen Content	Not Low Halogen - contains Br or Cl > 900 ppm.

Solder Process Capability

Not reviewed for solder process capability

Product Compliance Disclaimer

This information is provided based on reasonable inquiry of our suppliers and represents our current actual knowledge based on the information they provided. This information is subject to change. The part numbers that TE has identified as EU RoHS compliant have a maximum concentration of 0.1% by weight in homogenous materials for lead, hexavalent chromium, mercury, PBB, PBDE, DBP, BBP, DEHP, DIBP, and 0.01% for cadmium, or qualify for an exemption to these limits as defined in the Annexes of Directive 2011/65/EU (RoHS2). Finished electrical and electronic equipment products will be CE marked as required by Directive 2011/65/EU. Components may not be CE marked. Additionally, the part numbers that TE has identified as EU ELV compliant have a maximum concentration of 0.1% by weight in homogenous materials for lead, hexavalent chromium, and mercury, and 0.01% for cadmium, or qualify for an exemption to these limits as defined in the Annexes of Directive 2000/53/EC (ELV). Regarding the REACH Regulation, the information TE provides on SVHC in articles for this part number is based on the latest European Chemicals Agency (ECHA) 'Guidance on requirements for substances in articles' posted at this URL: https://echa.europa.eu/guidance-documents/guidance-on-reach

Compatible Parts



TE Part # 2-1563759-1
18POS,AMP MCP1.5K,REC HSG,ASSY



TE Part # 2112297-1
PROTECTION CAP,GROUP E,ASSY

Also in the Series | Heavy Duty Sealed Connector Series



Automotive Connector Caps & Covers (23)



Automotive Housings(221)

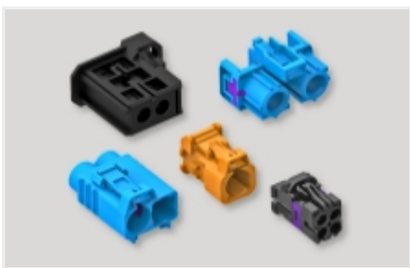

Data Connectivity Housings(1)

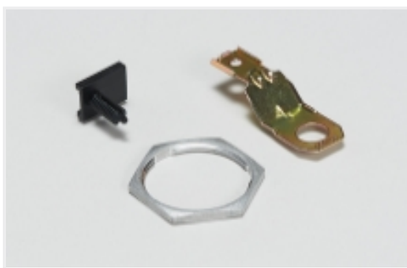

Other Automotive Connector Accessories(39)

Customers Also Bought



TE Part #CAT-H3399-CH8172
Heavy Duty Sealed Connector Series Housings



TE Part #2293269-3
DIA 6MM,PIN TERMINAL



TE Part #2293270-5
PIN DIA 6.0,RIGID,POWER PE

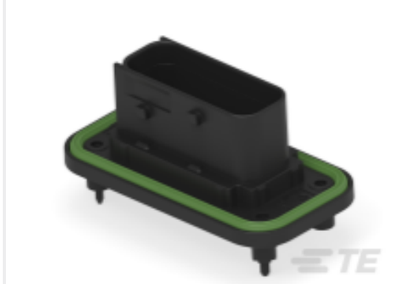

TE Part #CAT-J4A-HDSCH
Heavy Duty Sealed Connector Headers

TE Part #1718968-1
ROUND NUT M28x1.5

TE Part #1718969-1
LOCKING PLATE

Documents

Product Drawings

18POS,TAB1.5X0.64,HDR ASSY,180DEG,COD B

English

CAD Files

Customer View Model

ENG_CVM_CVM_2-2377481-1_B.3d_igs.zip

English

Customer View Model

ENG_CVM_CVM_2-2377481-1_B.3d_stp.zip

English

Customer View Model

ENG_CVM_CVM_2-2377481-1_B.2d_dxf.zip

English

3D PDF

3D

By downloading the CAD file I accept and agree to the Terms and Conditions of use.

Product Specifications

Application Specification

English